January 22, 2024

ADDENDUM NO. 1

1269715: State/Lake Loop Elevated Station

SPECIFICATION No.: 1269715

RFQ # 9998,1

For which bids will be opened in the office of the Department of Procurement Services Bid and Bond Room, City Hall-Room 103, 121 North LaSalle Street, Chicago, Illinois 60602 on **March 26, 2024, at 11:00 a.m. Central Time**.

BIDDER WILL ACKNOWLEDGE RECEIPT OF THIS ADDENDUM IN THE SPACE PROVIDED ON THE PROPOSAL PAGE

1. Plans have been added to this solicitation see Attachment A.

2. The **Pre-Bid meeting** has been moved to **February 1, 2024, at 10:00 AM**. The meeting will be held at 2N Mezzanine Conference Center M-04 Great Fire, 2 N. LaSalle Street, Chicago, IL 60602. Email Luis Bejar with the list of attendees that will be attending the conference meeting to be added to the visitor's list.

END OF ADDENDUM NO. 1

CITY OF CHICAGO
DEPARTMENT OF PROCUREMENT SERVICES

AILEEN VELAZQUEZ
CHIEF PROCUREMENT OFFICER

CITY OF CHICAGO

BRANDON JOHNSON
MAYOR

DEPARTMENT OF TRANSPORTATION
TOM CARNEY, ACTING COMMISSIONER

DIVISION OF ENGINEERING
DANIEL BURKE, P.E., S.E., MANAGING DEPUTY COMMISSIONER, CHIEF ENGINEER

CONTRACT PLANS
FOR CONSTRUCTION OF THE
STATE/LAKE LOOP ELEVATED STATION
200 NORTH STATE STREET
CHICAGO, ILLINOIS 60601

CDOT PROJECT NO. D-1-209
REQUISITION NO. 521749
SPECIFICATION NO. 1269715

ISSUED BY:
DEPARTMENT OF PROCUREMENT SERVICES
AILEEN VELAZQUEZ, CHIEF PROCUREMENT OFFICER

ATTACHMENT A

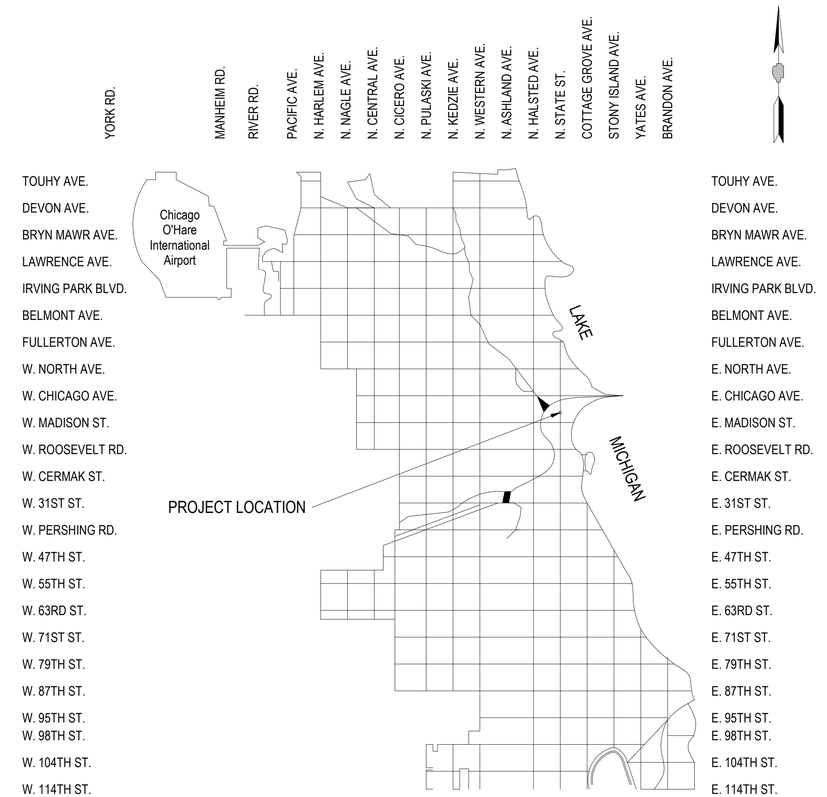

LOCATION MAP

FULL SIZE PLANS HAVE BEEN PREPARED USING STANDARD ENGINEERNIG SCALES.
REDUCED SIZE PLANS WILL NOT CONFORM TO STANDARD SCALES.

DIGGER: (312) 744-7000
CONTRACTOR SHALL CALL DIGGER TWO (2) WORKING DAYS (48 HOURS) BEFORE DIGGING.

CITY OF CHICAGO
DEPARTMENT OF TRANSPORTATION

COMMISSIONER — DATE

9/22/2022
MANAGING DEPUTY COMMISSIONER, CHIEF ENGINEER — DATE
DIVISION OF ENGINEERING

CHICAGO TRANSIT AUTHORITY
ENGINEERING DEPARTMENT

CHIEF INFRASTRUCTURE OFFICER — DATE

CHIEF ENGINEER, INFASTRUCTURE — DATE

MICHAEL J. LEV 062-055367 LICENSED PROFESSIONAL ENGINEER OF ILLINOIS — 6-17-22

MICHAEL LEV
NO. 062055367
EXP. 11/30/2023
SHEETS: ALL C, CT, CTS SHEETS, CX-120 TO CX-121, G-110

LICENSED LANDSCAPE ARCHITECT BRADLEY C. McCAULEY 157-001466 STATE OF ILLINOIS

BRADLEY MCCAULEY
NO. 157001466
EXP. LANDSCAPE ARCHITECTURE TITLE ACT APPROVED AUGUST 2021. - NEW EXPIRATION DATE PENDING
SHEETS: ALL L SHEETS

LICENSED STRUCTURAL ENGINEER DAVID R. HOROS 081.005335 STATE OF ILLINOIS

DAVID R. HOROS
NO. 081005335
EXP. 11/30/2022
SHEETS: S-105, S-123 TO S-125, S-160 TO S-165, S-600 TO S-680

LICENSED STRUCTURAL ENGINEER BRENDA GARZA KARHOFF 081.005746 STATE OF ILLINOIS

BRENDA GARZA KARHOFF
NO. 081005746
EXP. 11/30/2022
SHEETS: S-103 TO S-104, S-117 TO S-122, S-560 TO S-587

STATE OF ILLINOIS ADAM E. SEMEL 001-022637 LICENSED ARCHITECT

ADAM E. SEMEL
NO. 001022637
EXP. 11/30/2022
SHEETS: G-005 TO G-205, ALL AD, A, AG SHEETS EXCEPT AS LISTED BELOW

GEORGE E. BOURIS 062-055291 LICENSED PROFESSIONAL ENGINEER OF ILLINOIS — EXP.11-30-23

GEORGE E. BOURIS
NO. 062055291
EXP. 11/30/2023
SHEETS: ALL M, MS, P, PS SHEETS

LICENSED ARCHITECT QUENTIN PETERSEN 001.024068 STATE OF ILLINOIS

QUENTIN PETERSEN
NO. 001024068
EXP. 11/30/2022
SHEETS: G-004, ALL ADS, AS, AGS SHEETS

LICENSED PROFESSIONAL ENGINEER CARMEN J. DEAN 062-062138 STATE OF ILLINOIS

CARMEN J. DEAN
NO. 062062138
EXP. 11/30/2023
SHEETS: C-501 TO C-504, C-531 TO 534, ALL CX SHEETS EXCEPT AS LISTED ABOVE

LICENSED STRUCTURAL ENGINEER WILLIAM J. COLLETTI 081.008091 STATE OF ILLINOIS

WILLIAM COLLETTI
NO. 081008091
EXP. 11/30/2022
SHEETS: ALL S, SD, SX, SR, B SHEETS EXCEPT AS LISTED ELSEWHERE

LICENSED STRUCTURAL ENGINEER ANNA M. DUKES 081.005598 STATE OF ILLINOIS

ANNA DUKES
NO. 081005598
EXP. 11/30/2022
SHEETS: ALL SS SHEETS

LICENSED STRUCTURAL ENGINEER SHAWN T. BRODASKI 081.007569 STATE OF ILLINOIS

SHAWN T. BRODASKI
NO. 081007569
EXP. 11/30/2022
SHEETS: S-700 TO S-708

STATE OF ILLINOIS MARGUERITE A. KINDELIN 001-022030 LICENSED ARCHITECT — Expires 11-30-22

MARGUERITE A. KINDELIN
NO. 001022030
EXP. 11/30/2022
SHEETS: AD-111 TO AD-113, A-442 TO A-444, A-561

LICENSED PROFESSIONAL ENGINEER SUNISH MATHEW 062-063574 OF ILLINOIS

SUNISH MATHEW
NO. 062063574
EXP. 11/30/2023
SHEETS: ALL E, ES, ET, T, TS SHEETS

GENERAL

G-001 DRAWING INDEX
G-002 DRAWING INDEX
G-003 DRAWING INDEX
G-004 GENERAL NOTES
G-005 GENERAL NOTES
G-006 CTA STANDARD CLEARANCE DIAGRAM
G-051 OVERALL PROJECT KEYPLAN
G-052 EXISTING SECTION
G-101 BUILDING CODE MATRIX
G-102 BUILDING CODE MATRIX - SUBWAY
G-103 MOPD MEETING MINUTES
G-104 NFPA-130 CALCULATIONS
G-105 FIRE & LIFE SAFETY PLANS
G-106 FIRE & LIFE SAFETY PLANS
G-107 SUBWAY NFPA-130 CALCULATIONS
G-108 SUBWAY FIRE & LIFE SAFETY PLANS
G-110 SUGGESTED CONSTRUCTION SEQUENCE
G-201 RENDERINGS
G-202 RENDERINGS
G-203 RENDERINGS
G-204 RENDERINGS
G-205 RENDERINGS

GEOTECHNICAL

B-001 BORING LOGS 1
B-002 BORING LOGS 2
B-003 BORING LOGS 3
B-004 BORING LOGS 4
B-005 BORING LOGS 5
B-006 BORING LOGS 6
B-007 BORING LOGS 7
B-008 BORING LOGS 8
B-009 BORING LOGS 9
B-010 BORING LOGS 10
B-011 BORING LOGS 11
B-012 BORING LOGS 12

CIVIL

C-001 CIVIL GENERAL NOTES
C-002 CIVIL GENERAL NOTES
C-003 ALIGNMENT, TIES, AND BENCHMARKS
C-004 CONTROL POINTS
C-005 TYPICAL SECTIONS - LAKE STREET
C-006 TYPICAL SECTIONS - STATE STREET
C-101 EXISTING CONDITIONS - LAKE STREET
C-102 EXISTING CONDITIONS - LAKE STREET
C-103 EXISTING CONDITIONS - STATE STREET
C-104 OUC - NOTES
C-105 OUC SUBMITTAL OVERVIEW LAKE STREET
C-106 OUC SUBMITTAL OVERVIEW LAKE STREET
C-107 OUC SUBMITTAL OVERVIEW STATE STREET
C-111 DEMOLITION PLAN - LAKE STREET
C-112 DEMOLITION PLAN - LAKE STREET
C-113 DEMOLITION PLAN - STATE STREET
C-114 DEMOLITION PLAN - STATE STREET
C-121 PROPOSED IMPROVEMENTS - LAKE STREET
C-122 PROPOSED IMPROVEMENTS - LAKE STREET
C-123 PROPOSED IMPROVEMENTS - STATE STREET
C-124 PROPOSED IMPROVEMENTS - STATE STREET
C-131 PROPOSED GRADING - LAKE STREET
C-132 PROPOSED GRADING - LAKE STREET
C-133 PROPOSED GRADING - STATE STREET
C-134 PROPOSED GRADING - STATE STREET
C-135 PROPOSED GRADING DETAILS
C-141 CIVIL DETAILS
C-142 CIVIL DETAILS
C-143 CIVIL DETAILS
C-144 CIVIL DETAILS
C-501 ADA CURB RAMP - NORTHWEST CORNER
C-502 ADA CURB RAMP - NORTHEAST CORNER
C-503 ADA CURB RAMP - SOUTHWEST CORNER
C-504 ADA CURB RAMP - SOUTHEAST CORNER
C-531 ADA CURB RAMP DETAILS
C-532 ADA CURB RAMP DETAILS
C-533 ADA CURB RAMP DETAILS
C-534 ADA CURB RAMP DETAILS
C-600 EXISTING UTILITIES - SIDEWALK VAULT
C-601 EXISTING UTILITIES - SIDEWALK VAULT
C-602 EXISTING UTILITIES - SIDEWALK VAULT
C-606 WATER MAIN NOTES
C-607 DRAINAGE AND STRUCTURE ADJUSTMENT SCHEDULE
C-611 PROPOSED DRAINAGE - LAKE STREET
C-612 PROPOSED DRAINAGE - LAKE STREET
C-613 PROPOSED DRAINAGE - STATE STREET
C-621 PROPOSED WATER MAIN - LAKE STREET
C-622 PROPOSED WATER MAIN - LAKE STREET
C-623 PROPOSED WATER MAIN - STATE STREET
C-631 DRAINAGE DETAILS
C-632 DRAINAGE DETAILS
C-633 DRAINAGE DETAILS
C-634 DRAINAGE DETAILS
C-635 DRAINAGE DETAILS
C-636 DRAINAGE DETAILS
C-637 DRAINAGE DETAILS
C-638 DRAINAGE DETAILS
C-639 DRAINAGE DETAILS
C-640 DRAINAGE DETAILS
C-641 DRAINAGE DETAILS
C-642 DRAINAGE DETAILS
C-643 DRAINAGE DETAILS
C-644 WATER MAIN DETAILS
C-645 WATER MAIN DETAILS
C-701 EROSION AND SEDIMENT CONTROL PLAN - LAKE STREET
C-702 EROSION AND SEDIMENT CONTROL PLAN - LAKE STREET
C-703 EROSION AND SEDIMENT CONTROL PLAN - STATE STREET
C-731 EROSION CONTROL DETAIL
C-801 PROPOSED SIGNAGE AND PAVEMENT MARKING - LAKE STREET
C-802 PROPOSED SIGNAGE AND PAVEMENT MARKING - LAKE STREET
C-803 PROPOSED SIGNAGE AND PAVEMENT MARKING - STATE STREET
C-804 PROPOSED SIGNAGE AND PAVEMENT MARKING - STATE STREET
C-831 SIGNING AND PAVEMENT MARKING DETAILS
C-832 SIGNING AND PAVEMENT MARKING DETAILS
C-833 SIGNING AND PAVEMENT MARKING DETAILS
C-834 SIGNING AND PAVEMENT MARKING DETAILS
C-835 SIGNING AND PAVEMENT MARKING DETAILS
C-836 SIGNING AND PAVEMENT MARKING DETAILS
C-901 CROSS SECTIONS - LAKE STREET
C-902 CROSS SECTIONS - LAKE STREET
C-903 CROSS SECTIONS - LAKE STREET
C-904 CROSS SECTIONS - LAKE STREET
C-905 CROSS SECTIONS - LAKE STREET
C-906 CROSS SECTIONS - LAKE STREET
C-907 CROSS SECTIONS - STATE STREET
C-908 CROSS SECTIONS - STATE STREET
C-909 CROSS SECTIONS - STATE STREET
C-910 CROSS SECTIONS - STATE STREET

CIVIL TRACK

CT-101 TRACK PLAN AND PROFILE LAKE/STREET INTERSECTION
CT-102 TRACK SYMBOLS AND ABBREVIATIONS
CT-301 TRACK REPLACEMENT TYPICAL SECTION
CT-302 TRACK REPAIR/MODIFICATION TYPICAL SECTION
CT-501 PLANKING PLAN AND NOTES
CT-502 OTHER TRACK MATERIALS DETAILS
CT-503 OTHER TRACK MATERIALS DETAILS
CT-504 SRS TRACK FASTENING COMPONENTS AND ASSEMBLY
CT-505 STEEL INSIDE GUARD RAIL PLAN AND DETAILS

CIVIL STAGING

CX-100 MAINTENANCE OF TRAFFIC AND DETOUR NOTES
CX-101 MAINTENANCE OF TRAFFIC AND DETOUR LEGEND
CX-120 CONSTRUCTION CANOPY AND BARRICADE DETAILS
CX-121 CONSTRUCTION CANOPY AND BARRICADE DETAILS
CX-201 MAINTENANCE OF TRAFFIC LAKE STREET
CX-202 MAINTENANCE OF TRAFFIC STATE STREET
CX-203 MAINTENANCE OF TRAFFIC STATE STREET
CX-401 FULL STREET CLOSURE LAKE STREET FROM DEARBORN TO WABASH
CX-402 FULL STREET CLOSURE STATE STREET FROM RANDOLPH TO LAKE
CX-403 FULL STREET CLOSURE STATE STREET FROM RANDOLPH TO WACKER
CX-901 IDOT DISTRICT TRAFFIC CONTROL STANDARDS
CX-902 IDOT TRAFFIC CONTROL STANDARDS
CX-903 IDOT TRAFFIC CONTROL STANDARDS

CIVIL TRAFFIC SIGNALS

CTS-101 TRAFFIC CONTROL SIGNALS N. STATE ST. AND E-W. LAKE ST.
CTS-102 TRAFFIC CONTROL SIGNALS N. STATE ST. AND E-W. LAKE ST.
CTS-103 TEMPORARY TRAFFIC SIGNAL PLAN STATE AND LAKE STREET
CTS-104 TEMPORARY TRAFFIC SIGNAL PLAN STATE AND LAKE STREET
CTS-105 DOE STANDARD DRAWINGS
CTS-106 DOE STANDARD DRAWINGS
CTS-107 DOE STANDARD DRAWINGS
CTS-108 DOE STANDARD DRAWINGS
CTS-109 DOE STANDARD DRAWINGS
CTS-110 DOE STANDARD DRAWINGS
CTS-111 DOE STANDARD DRAWINGS
CTS-112 DOE STANDARD DRAWINGS
CTS-113 DOE STANDARD DRAWINGS
CTS-114 DOE STANDARD DRAWINGS
CTS-115 DOE STANDARD DRAWINGS
CTS-116 DOE STANDARD DRAWINGS
CTS-117 DOE STANDARD DRAWINGS
CTS-118 DOE STANDARD DRAWINGS
CTS-119 DOE STANDARD DRAWINGS
CTS-120 DOE STANDARD DRAWINGS
CTS-121 DOE STANDARD DRAWINGS
CTS-122 DOE STANDARD DRAWINGS
CTS-123 DOE STANDARD DRAWINGS
CTS-124 DOE STANDARD DRAWINGS

LANDSCAPE

L-101 LANDSCAPE SITE PLAN
L-103 HARDSCAPE PLAN
L-103A HARDSCAPE NORTH GATEWAY PLAZA ENLARGEMENT
L-103B HARDSCAPE SOUTH MEDIAN ENLARGEMENT
L-106 PLANTING PLANS - ENLARGEMENTS
L-106A PLANTING PLANS - ENLARGEMENTS
L-501 PAVING DETAILS
L-501A PAVING DETAILS
L-502 GATEWAY PLAZA DETAILS
L-502A GATEWAY PLAZA PERSPECTIVES
L-503 SITE FURNISHING DETAILS
L-504 LANDSCAPE DETAILS

STRUCTURAL DEMO

SD-001 STRUCTURAL DEMOLITION NOTES
SD-101 DEMOLITION PLAN - GROUND LEVEL
SD-102 DEMOLITION PLAN - TRACK LEVEL
SD-103 DEMOLITION PLAN - PLATFORM LEVEL
SD-111 PARTIAL DEMOLITION PLAN WEST - VAULTED SIDEWALKS
SD-112 PARTIAL DEMOLITION PLAN EAST - VAULTED SIDEWALKS
SD-301 STRUCTURAL DEMOLITION SECTIONS 1
SD-302 STRUCTURAL DEMOLITION SECTIONS 2
SD-303 STRUCTURAL DEMOLITION SECTIONS 3

STRUCTURAL

S-001 STRUCTURAL NOTES 1
S-002 STRUCTURAL NOTES 2
S-003 STRUCTURAL NOTES 3
S-101 OVERALL PLAN - GROUND LEVEL
S-102 OVERALL PLAN - TRACK LEVEL
S-103 OVERALL PLAN - PLATFORM LEVEL
S-104 OVERALL PLAN - PLATFORM PRECAST & CAST-IN-PLACE
S-105 OVERALL PLAN - CANOPY
S-111 PARTIAL PLAN WEST - GROUND LEVEL
S-112 PARTIAL PLAN CENTRAL - GROUND LEVEL
S-113 PARTIAL PLAN EAST - GROUND LEVEL
S-114 PARTIAL PLAN WEST - TRACK LEVEL
S-115 PARTIAL PLAN CENTRAL - TRACK LEVEL
S-116 PARTIAL PLAN EAST - TRACK LEVEL
S-117 PARTIAL PLAN WEST - PLATFORM LEVEL
S-118 PARTIAL PLAN CENTRAL - PLATFORM LEVEL
S-119 PARTIAL PLAN EAST - PLATFORM LEVEL
S-120 PARTIAL PLAN WEST - PRECAST & CAST-IN-PLACE LEVEL
S-121 PARTIAL PLAN CENTRAL - PRECAST & CAST-IN-PLACE LEVEL
S-122 PARTIAL PLAN EAST - PRECAST & CAST-IN-PLACE LEVEL
S-123 PARTIAL PLAN WEST - CANOPY
S-124 PARTIAL PLAN CENTRAL - CANOPY
S-125 PARTIAL PLAN EAST - CANOPY
S-140 COMMUNICATIONS ROOM PARTIAL PLANS
S-141 ELECTRICAL ROOM PARTIAL PLANS
S-150 EXIT STAIR PLAN AND ELEVATION – NORTHWEST
S-151 EXIT STAIR PLAN AND ELEVATION – SOUTHWEST
S-152 EXIT STAIR PLAN AND ELEVATION – NORTHEAST
S-153 EXIT STAIR PLAN AND ELEVATION – SOUTHEAST
S-154 ESCALATOR PLAN AND ELEVATION
S-160 BRIDGE/TOWER PARTIAL PLANS - FOUNDATION LEVEL
S-161 BRIDGE/TOWER PARTIAL PLANS - GROUND LEVEL
S-162 BRIDGE/TOWER PARTIAL PLANS - PLATFORM LEVEL
S-163 BRIDGE/TOWER PARTIAL PLANS - BRIDGE LEVEL
S-164 BRIDGE/TOWER PARTIAL PLANS - LOWER ROOF LEVEL
S-165 BRIDGE/TOWER PARTIAL PLANS - ROOF LEVEL
S-300 BENT 442 ELEVATION
S-301 BENT 443 ELEVATION
S-302 BENT 444 ELEVATION
S-303 BENT 445 ELEVATION
S-304 BENT 446 ELEVATION
S-305 BENT 447 ELEVATION
S-306 BENT 449 ELEVATION
S-307 BENT 450 ELEVATION
S-308 BENT 451 ELEVATION
S-309 BENT 452 ELEVATION
S-310 BENT 453 ELEVATION
S-330 CROSS SECTIONS THRU TRACK STRINGERS
S-340 COMMUNICATIONS AND ELECTRICAL ROOM SECTIONS
S-500 DRILLED SHAFT AND MICROPILE DETAILS
S-501 BENT PILE CAP FOUNDATION PLAN AND DETAILS 1
S-502 BENT PILE CAP FOUNDATION PLAN AND DETAILS 2
S-503 ELEVATOR TOWER FOUNDATION PLAN AND DETAILS
S-504 ESCALATOR TOWER FOUNDATION PLAN AND DETAILS
S-505 ESCALATOR PIT FOUNDATION PLAN AND DETAILS
S-506 EXIT STAIR FOUNDATION PLAN AND DETAILS 1
S-507 EXIT STAIR FOUNDATION PLAN AND DETAILS 2
S-510 MISCELLANEOUS STRUCTURAL DETAILS
S-520 BENT COLUMN BASE PLATE DETAILS
S-521 BENT GIRDER DETAILS 1
S-522 BENT GIRDER DETAILS 2
S-523 BENT GIRDER DETAILS 3
S-524 BENT GIRDER TO TRACK STRINGER CONNECTION DETAILS
S-530 TRACK STRINGER & THRU PLATE GIRDER ELEVATIONS
S-531 TRACK STRINGER DETAILS
S-532 THRU PLATE GIRDER DETAILS
S-533 LATERAL BRACING DETAILS 1
S-534 LATERAL BRACING DETAILS 2
S-535 TRACK STRUCTURE GIRDER DESIGN DATA TABLES
S-536 TRACK STRUCTURE COLUMN DESIGN DATA TABLES
S-537 TRACK ACCESS STAIR PLANS, SECTION, AND ELEVATION 1
S-538 TRACK ACCESS STAIR PLANS, SECTION, AND ELEVATION 2
S-539 TRACK ACCESS STAIR DETAILS
S-540 COMM & ELEC ROOM DETAILS 1
S-541 COMM & ELEC ROOM DETAILS 2
S-542 COMM & ELEC ROOM DETAILS 3
S-543 COMM & ELEC ROOM DETAILS 4
S-544 COMM & ELEC ROOM DETAILS 5
S-550 EXIT STAIR DETAILS 1
S-551 EXIT STAIR DETAILS 2
S-552 ESCALATOR DETAILS
S-560 BEARING PLAN AND DETAILS 1
S-561 BEARING PLAN AND DETAILS 2
S-562 BENT 442 PLATFORM SECTIONS & DETAILS
S-563 BENT 443 PLATFORM SECTIONS & DETAILS
S-564 BENT 444 PLATFORM SECTIONS & DETAILS
S-565 BENT 445 PLATFORM SECTIONS & DETAILS
S-566 BENT 446 PLATFORM SECTIONS & DETAILS
S-567 BENT 447 PLATFORM SECTIONS & DETAILS
S-568 BENT 449 PLATFORM SECTIONS & DETAILS
S-569 BENT 450 PLATFORM SECTIONS & DETAILS
S-570 BENT 451 PLATFORM SECTIONS & DETAILS
S-571 BENT 452 PLATFORM SECTIONS & DETAILS
S-572 BENT 453 PLATFORM SECTIONS & DETAILS
S-573 STRUCTURAL STEEL DETAILS 1
S-574 STRUCTURAL STEEL DETAILS 2
S-575 STRUCTURAL STEEL DETAILS 3
S-576 STRUCTURAL STEEL DETAILS 4
S-577 STRUCTURAL STEEL DETAILS 5
S-578 STRUCTURAL STEEL DETAILS 6
S-579 STRUCTURAL STEEL DETAILS 7
S-580 STRUCTURAL STEEL DETAILS 8
S-581 STRUCTURAL STEEL DETAILS 9
S-582 STRUCTURAL STEEL DETAILS 10
S-583 STRUCTURAL STEEL DETAILS 11
S-584 STRUCTURAL STEEL DETAILS 12
S-585 PRECAST CONCRETE DETAILS 1
S-586 PRECAST CONCRETE DETAILS 2
S-587 CONCRETE SLAB DETAILS
S-600 CANOPY - STRUCTURAL SYSTEM DESCRIPTION & CRITERIA
S-601 CANOPY - STRUCTURAL SYSTEM DIAGRAMS
S-602A CANOPY LOADING CRITIERIA
S-602B CANOPY LOADING DIAGRAMS
S-603 CANOPY NOTES AND DETAILS
S-610 PLATFORM CANOPY PREFABRICATED ASSEMBLY LAYOUT
S-611 PLATFORM CANOPY GEOMETRY DEFINITION
S-612 PLATFORM CANOPY GEOMETRY DEFINITION
S-613 PLATFORM CANOPY DETAILS
S-614 PLATFORM CANOPY DETAILS
S-615 PLATFORM CANOPY DETAILS
S-616 PLATFORM CANOPY DETAILS
S-617 PLATFORM CANOPY DETAILS
S-620 DOME CANOPY PREFABRICATED ASSEMBLY LAYOUT
S-621 DOME CANOPY GEOMETRY DEFINITION
S-622 DOME CANOPY MEMBER SIZES
S-623 DOME CANOPY COORDINATE SCHEDULES
S-624 DOME CANOPY I-DIRECTION MEMBER SCHEDULES
S-625 DOME CANOPY J-DIRECTION MEMBER SCHEDULES
S-626 DOME CANOPY DETAILS
S-627 DOME CANOPY DETAILS
S-628 DOME CANOPY DETAILS
S-640 TOWER ELEVATIONS
S-641 TOWER ELEVATIONS
S-642 ROOF DETAIL
S-643 DETAIL
S-644 DETAILS
S-645 DOME CONNECTION TO TOWER DETAILS
S-646 DOME CONNECTION TO TOWER DETAILS
S-647 DOME CONNECTION TO TOWER DETAILS
S-650 FLYOVER BRIDGE ELEVATIONS
S-651 FLYOVER BRIDGE ELEVATIONS
S-652 FLYOVER BRIDGE ELEVATIONS

DESIGN BY:										
DRAWN BY:										
CHECKED BY:										
APPROVED BY:		4	7/3/2023	ISSUED FOR BID						
CDOT/APPROVED BY:		NO.	DATE	REVISIONS	DES.	DRW.	CHK.	DCCO	CDOT	

TRANSYSTEMS
222 SOUTH RIVERSIDE PLAZA SUITE 610
CHICAGO, ILLINOIS 60606

CHICAGO DEPARTMENT OF TRANSPORTATION
DIVISION OF ENGINEERING

STATE / LAKE LOOP ELEVATED STATION
200 NORTH STATE STREET, CHICAGO, IL 60601

SPEC. NO.

DRAWING INDEX

DRAWING NO. G-001

CDOT PROJECT D-1-209 | DATE: 9/9/2022 | REVISION NO.4

S-653 STAIR DETAILS
S-660 STEEL DETAILS
S-661 STEEL DETAILS
S-662 STEEL DETAILS
S-663 STEEL DETAILS
S-664 STEEL DETAILS
S-665 BRACE DETAILS
S-670 CENTRAL STAIR PARTIAL PLANS
S-671 CENTRAL STAIR DETAILS
S-672 CENTRAL STAIR DETAILS
S-673 CENTRAL STAIR DETAILS
S-674 CENTRAL STAIR DETAILS
S-675 PLINTH PARTIAL PLANS AND SECTIONS
S-680 HISTORIC CANOPY PLANS, SECTIONS & DETAILS
S-700 VAULTED SIDEWALK RECONSTRUCTION PLAN - LOCATION 1
S-701 VAULTED SIDEWALK RECONSTRUCTION PLAN - LOCATION 2
S-702 VAULTED SIDEWALK RECONSTRUCTION PLAN - LOCATION 3
S-703 VAULTED SIDEWALK RECONSTRUCTION FOOTING PLANS - LOCATION 1 & 2
S-704 VAULTED SIDEWALK RECONSTRUCTION FOOTING PLAN - LOCATION 3
S-705 VAULTED SIDEWALK RECONSTRUCTION DETAILS - LOCATION 1
S-706 VAULTED SIDEWALK RECONSTRUCTION DETAILS - LOCATION 2
S-707 VAULTED SIDEWALK RECONSTRUCTION DETAILS - LOCATION 3
S-708 VAULTED SIDEWALK RECONSTRUCTION TYPICAL DETAILS

STRUCTURAL SHORING
SX-001 SUGGESTED SHORING NOTES
SX-101 SUGGESTED SHORING PLAN
SX-201 SUGGESTED SHORING - TYPE 1 STAGING DIAGRAMS
SX-202 SUGGESTED SHORING - TYPE 2 STAGING DIAGRAMS
SX-203 SUGGESTED SHORING - JACKING AND TYPE 3 STAGING DIAGRAMS
SX-301 SUGGESTED SHORING - TYPE 1 (STAGE 1) DETAILS
SX-302 SUGGESTED SHORING - TYPE 1 (STAGE 2) DETAILS
SX-303 SUGGESTED SHORING - TYPE 2 (STAGE 1) DETAILS
SX-304 SUGGESTED SHORING - TYPE 2 (STAGE 2) DETAILS
SX-305 SUGGESTED SHORING - TYPE 3 (STAGE 1) DETAILS
SX-306 SUGGESTED SHORING - TYPE 3 (STAGE 2) DETAIL

STRUCTURAL REPAIR
SR-001 STRUCTURAL REPAIR NOTES
SR-100 REPAIR PLAN AND ELEVATION 1 (BENT 442 - 443)
SR-101 REPAIR PLAN AND ELEVATION 2 (BENT 443 - 444)
SR-102 REPAIR PLAN AND ELEVATION 3 (BENT 444 - 445)
SR-103 REPAIR PLAN AND ELEVATION 4 (BENT 445 - 446)
SR-104 REPAIR PLAN AND ELEVATION 5 (BENT 446 - 447)
SR-105 REPAIR PLAN AND ELEVATION 6 (BENT 449 - 450)
SR-106 REPAIR PLAN AND ELEVATION 7 (BENT 450 - 451)
SR-107 REPAIR PLAN AND ELEVATION 8 (BENT 451 - 452)
SR-108 REPAIR PLAN AND ELEVATION 9 (BENT 452 - 453)
SR-500 PROPOSED STRUCTURE REPAIRS - 1
SR-501 PROPOSED STRUCTURE REPAIRS - 2
SR-502 PROPOSED STRUCTURE REPAIRS - 3
SR-503 PROPOSED STRUCTURE REPAIRS - 4
SR-504 PROPOSED STRUCTURE REPAIRS - 5

STRUCTURAL SUBWAY
SS-001 GENERAL STRUCTURAL NOTES (1 OF 4)
SS-002 GENERAL STRUCTURAL NOTES (2 OF 4)
SS-003 GENERAL STRUCTURAL NOTES (3 OF 4)
SS-004 GENERAL STRUCTURAL NOTES (4 OF 4)
SS-010 TYPICAL CONCRETE DETAILS (1 OF 3)
SS-011 TYPICAL CONCRETE DETAILS (2 OF 3)
SS-012 TYPICAL CONCRETE DETAILS (3 OF 3)
SS-020 TYPICAL MASONRY DETAILS (1 OF 2)
SS-021 TYPICAL MASONRY DETAILS (2 OF 2)
SS-101 SUBWAY STREET LEVEL ROOF PLAN - OVERALL
SS-102 SUBWAY STREET LEVEL PLAN - OVERALL
SS-103 SUBWAY MEZZANINE LEVEL ROOF PLAN - OVERALL
SS-104 SUBWAY MEZZANINE LEVEL PLAN - OVERALL
SS-105 SUBWAY PLATFORM LEVEL PLAN - OVERALL
SS-111 SUBWAY STREET LEVEL ROOF PLAN - NORTH
SS-112 SUBWAY STREET LEVEL PLAN - NORTH
SS-113 SUBWAY MEZZANINE LEVEL ROOF PLAN - NORTH
SS-114 SUBWAY MEZZANINE LEVEL ROOF PLAN - SOUTH
SS-115 SUBWAY MEZZANINE LEVEL PLAN - NORTH
SS-116 SUBWAY MEZZANINE LEVEL PLAN - SOUTH
SS-117 SUBWAY PLATFORM LEVEL PLAN - SOUTH
SS-200 SUBWAY STREET LEVEL ENLARGED PARTIAL PLAN AND ROOF PLANS - NORTH
SS-201 SUBWAY MEZZANINE LEVEL ENLARGED ROOF PLAN - SOUTH
SS-202 SUBWAY MEZZANINE LEVEL ENLARGED PARTIAL PLAN - NORTH
SS-203 SUBWAY MEZZANINE LEVEL ENLARGED PARTIAL PLAN - SOUTH
SS-204 SUBWAY PLATFORM LEVEL ENLARGED PARTIAL PLAN - SOUTH
SS-300 SECTIONS AND DETAILS
SS-301 SECTIONS AND DETAILS
SS-302 SECTIONS AND DETAILS
SS-303 SECTIONS AND DETAILS
SS-304 SECTIONS AND DETAILS
SS-305 SECTIONS AND DETAILS
SS-306 SECTIONS AND DETAILS
SS-307 SECTIONS AND DETAILS
SS-308 SECTIONS AND DETAILS
SS-309 SECTIONS AND DETAILS
SS-310 SECTIONS AND DETAILS
SS-311 SECTIONS AND DETAILS
SS-312 SECTIONS AND DETAILS
SS-400 SECTIONS AND DETAILS
SS-401 SECTIONS AND DETAILS
SS-500 TEMPORARY SOIL RETENTION SYSTEM (TSRS) - OVERVIEW
SS-501 TEMPORARY SOIL RETENTION SYSTEM (TSRS) WALL ELEVATIONS
SS-502 TEMPORARY SOIL RETENTION SYSTEM (TSRS) WALL ELEVATIONS

ARCHITECTURAL DEMO
AD-101 DEMOLITION PLANS
AD-102 DEMOLITION ROOF PLAN
AD-111 SELECTIVE DEMOLITION GENERAL NOTES
AD-112 PLATFORM LEVEL SELECTIVE DEMOLITION PLAN
AD-113 ROOF SELECTIVE DEMOLITION PLAN

ARCHITECTURAL
A-001 SYMBOLS & ABBREVIATIONS
A-002 TYP MOUNTING HEIGHTS & MATERIALS LIST
A-004 WIND PRESSURE DIAGRAMS - POSITIVE PRESSURES
A-005 WIND PRESSURE DIAGRAMS - NEGATIVE PRESSURES
A-101 STREET LEVEL AND PLATFORM LEVEL PLANS
A-102 ROOF LEVEL MEZZ AND FLYOVER PLANS
A-111 ENLARGED STREET LEVEL PLAN - WEST
A-112 ENLARGED STREET LEVEL PLAN - CENTER
A-113 ENLARGED STREET LEVEL PLAN - EAST
A-121 ENLARGED PLATFORM LEVEL PLAN - WEST
A-122 ENLARGED PLATFORM LEVEL PLAN - CENTER
A-123 ENLARGED PLATFORM LEVEL PLAN - EAST
A-131 ENLARGED MEZZ AND FLYOVER PLANS
A-141 ENLARGED ROOF LEVEL PLAN - WEST
A-142 ENLARGED ROOF LEVEL PLAN - CENTER
A-143 ENLARGED ROOF LEVEL PLAN - EAST
A-152 STREET LEVEL REFLECTED CEILING PLAN - CENTER
A-162 PLATFORM LEVEL REFLECTED CEILING PLAN - CENTER
A-201 SOUTH AND NORTH ELEVATIONS
A-211 ENLARGED SOUTH ELEVATIONS
A-212 ENLARGED SOUTH ELEVATIONS
A-213 ENLARGED NORTH ELEVATIONS
A-214 ENLARGED NORTH ELEVATIONS
A-301 OVERALL LONGITUDINAL SECTIONS
A-311 ENLARGED LONGITUDINAL SECTIONS - NORTH PLATFORM
A-312 ENLARGED LONGITUDINAL SECTIONS - NORTH PLATFORM
A-313 ENLARGED LONGITUDINAL SECTIONS - SOUTH PLATFORM
A-314 ENLARGED LONGITUDINAL SECTIONS - SOUTH PLATFORM
A-321 TRANSVERSE SECTION - STATION HOUSE
A-322 TRANSVERSE SECTION - TYPICAL PLATFORM
A-323 FLYOVER SECTIONS
A-411 EXIT STAIR 1A ENLARGED PLAN, ELEVATIONS & SECTIONS
A-412 STAIR 1B ENLARGED PLAN, ELEVATIONS & SECTIONS
A-413 STAIR 2B ENALRGED PLAN, ELEVATIONS & SECTIONS
A-414 EXIT STAIR 2A & EAST MEZZANINE STAIR ENLARGED PLAN, ELEVATIONS & SECTIONS
A-415 EXIT STAIR 3A & WEST MEZZANINE STAIR ENLARGED PLANS, ELEVATIONS & SECTIONS
A-416 EXIT STAIR 4A ENLARGED PLAN, ELEVATIONS & SECTIONS
A-417 FLYOVER STAIR ENLARGED PLANS, ELEVATIONS & SECTIONS
A-418 FEATURE STAIR CANOPY ENLARGED PLANS & SECTIONS
A-419 TYP STAIR & ESCALATOR ENLARGED SECTIONS & ELEVATIONS
A-420 ESCALATOR 1 ENLARGED PLANS, ELEVATIONS & SECTIONS
A-421 RIB PROFILE GEOMETRY
A-422 RIB PROFILE GEOMETRY - FEATURE STAIR
A-423 RIB PROFILE GEOMETRY - FEATURE STAIR
A-424 RIB PROFILE GEOMETRY - ABUTMENTS & FLYOVER
A-425 RIB PROFILE GEOMETRY - ABUTMENTS & FLYOVER
A-426 RIB PROFILE GEOMETRY - EXIT STAIRS
A-427 RIB PROFILE GEOMETRY - EXIT STAIRS
A-428 RIB PROFILE GEOMETRY - EXIT STAIRS
A-429 RIB PROFILE GEOMETRY - ESCALATOR
A-431 ELEVATOR, MACHINE RM, JANITOR'S CLOSET & TOILET RM ENLARGED PLANS & INTERIOR ELEVATIONS
A-432 ENLARGED ABUTMENT ELEVATIONS
A-433 ENLARGED ABUTMENT ELEVATIONS
A-434 ENLARGED ABUTMENT ELEVATIONS
A-435 ENLARGED ELEVATOR ELEVATION & SECTIONS
A-441 ENLARGED STATION HOUSE PLANS & ELEVATIONS
A-442 FARE ARRAY CANOPY ENLARGED PLAN & RCP
A-443 FARE ARRAY CANOPY ELEVATIONS
A-444 FARE ARRAY CANOPY SECTIONS
A-451 ENLARGED ELEC AND COM ROOM ELEVATIONS & SECTIONS
A-501 DOME ENCLOSURE GEOMETRY - GLAZING UNIT
A-502 DOME GLAZING UNIT GEOMETRY CHART
A-503 DOME GLAZING UNIT GEOMETRY CHART
A-504 DOME GLAZING UNIT GEOMETRY CHART
A-505 DOME GLAZING UNIT GEOMETRY CHART
A-506 DOME ENCLOSURE GEOMETRY - RAFTER & PURLIN
A-507 DOME RAFTER GEOMETRY CHART
A-508 DOME PURLIN GEOMETRY CHART
A-509 DOME PURLIN GEOMETRY CHART
A-511 DOME ENCLOSURE DETAILS
A-512 DOME ENCLOSURE DETAILS
A-515 VAULT ENCLOSURE DETAILS
A-516 VAULT ENCLOSURE DETAILS
A-517 VAULT ENCLOSURE DETAILS
A-521 ABUTMENT ENCLOSURE DETAILS
A-522 ABUTMENT ENCLOSURE DETAILS
A-523 FLYOVER ENCLOSURE AND BRIDGE DETAILS
A-524 ROOF DETAILS
A-531 TYPICAL PLATFORM DETAILS
A-541 STAIR & GUARDRAIL DETAILS
A-542 STAIR & GUARDRAIL DETAILS
A-543 STAIR ENCLOSURE DETAILS
A-544 ESCALATOR ENCLOSURE DETAILS
A-551 CABLE AND LIGHT TRAY ELEVATIONS
A-552 CABLE AND LIGHT TRAY DETAILS
A-553 CABLE AND LIGHT TRAY DETAILS
A-561 FARE ARRAY CANOPY DETAILS
A-571 ELEC CLOSET ENCLOSURE DETAILS
A-572 ELEC AND COM ROOM ENCLOSURE DETAILS
A-601 DOOR SCHEDULE & DETAILS
A-602 PARTITION TYPES
A-603 PARTITION DETAILS
A-604 ROOM FINISH SCHEDULE
A-701 COMPASS ROSE
A-702 COMPASS ROSE ARTWORK
A-703 ELEVATOR CAB INTERIOR
A-704 ELEVATOR HALL CALL & INTERIOR PANEL
A-711 CAK
A-712 CAK DETAILS
A-713 HIGH BARRIER GATE, ROTOGATE
A-714 WINDBREAK ENLARGED PLANS, ELEVATIONS & SECTIONS
A-715 BENCH ENLARGED PLAN, ELEVATION, SECTION & DETAILS
A-716 PLATFORM GUARDRAILS, PHONES & RECEPTACLES
A-721 GAP FILLER ENCLOSURE
A-722 GAP FILLER DEVICE
A-723 SANDBOX
A-724 TACTILE PANEL AT EDGE
A-731 CTA LOGO SIGN
A-732 STATIONHOUSE CLOCK
A-733 STATIONHOUSE CLOCK DETAILS

ARCHITECTURAL GRAPHICS
AG-011 CIRCULATION DIAGRAMS
AG-101 STREET & FLYOVER LEVEL SIGNAGE PLANS
AG-121 PLATFORM LEVEL SIGNAGE PLAN - WEST
AG-122 PLATFORM LEVEL SIGNAGE PLAN - CENTER
AG-123 PLATFORM LEVEL SIGNAGE PLAN - EAST
AG-211 PLATFORM LEVEL SIGNAGE ELEVATIONS
AG-401 ENLARGED STREET LEVEL ELEVATIONS
AG-402 ENLARGED STREET LEVEL ELEVATIONS
AG-411 ENLARGED PLATFORM LEVEL ELEVATIONS
AG-412 ENLARGED PLATFORM LEVEL ELEVATIONS
AG-413 ENLARGED PLATFORM LEVEL ELEVATIONS
AG-414 ENLARGED FLYOVER LEVEL ELEVATIONS
AG-501 SIGNAGE MOUNTING DETAILS
AG-502 SIGNAGE MOUNTING DETAILS
AG-511 SIGNAGE MOUNTING DETAILS
AG-512 SIGNAGE MOUNTING DETAILS
AG-601 SIGNAGE SCHEDULES
AG-602 SIGNAGE SCHEDULES
AG-603 SIGNAGE SCHEDULES
AG-604 SIGNAGE DRILLING PATTERNS

ARCHITECTURAL DEMO SUBWAY
ADS-101 SUBWAY STREET LEVEL DEMOLITION PLAN
ADS-102 SUBWAY MEZZANINE ROOF DEMO PLAN
ADS-103 SUBWAY MEZZANINE DEMOLITION PLAN
ADS-104 SUBWAY PLATFORM DEMOLITION PLAN
ADS-105 SUBWAY MEZZANINE REFLECTED CEILING DEMO PLAN
ADS-106 SUBWAY DEMOLITION SECTIONS
ADS-107 SUBWAY DEMOLITION PHOTOS

ARCHITECTURAL SUBWAY
AS-001 SYMBOLS & ABBREVIATIONS
AS-101 SUBWAY STREET LEVEL FLOOR PLAN
AS-102 SUBWAY MEZZANINE FLOOR PLAN
AS-103 SUBWAY PLATFORM FLOOR PLAN
AS-111 SUBWAY ENLARGED STREET LEVEL PLAN - NORTH
AS-112 SUBWAY ENLARGED MEZZANINE LEVEL PLAN - NORTH
AS-113 SUBWAY ENLARGED MEZZANINE LEVEL PLAN - SOUTH
AS-114 SUBWAY ENLARGED PLATFORM LEVEL PLAN - SOUTH
AS-131 SUBWAY MEZZANINE REFLECTED CEILING PLAN - NORTH
AS-132 SUBWAY MEZZANINE REFLECTED CEILING PLAN - SOUTH
AS-133 SUBWAY PLATFORM REFLECTED CEILING PLAN - SOUTH
AS-301 SUBWAY SECTIONS
AS-302 SUBWAY SECTIONS
AS-401 UNPAID ELEVATOR S1 ENLARGED PLANS & SECTIONS
AS-402 PAID ELEVATOR S2 ENLARGED PLANS & SECTIONS
AS-403 ELEVATOR ENLARGED ELEVATIONS
AS-404 ELEVATOR ENLARGED ELEVATIONS
AS-411 ENLARGED STAIR PLANS, SECTIONS & DETAILS
AS-431 SUBWAY MEZZANINE FINISH PLANS
AS-432 SUBWAY PLATFORM FINISH PLAN
AS-433 ENLARGED TILE PATTERN ELEVATIONS
AS-434 ENLARGED TILE PATTERN ELEVATIONS
AS-435 ENLARGED TILE PATTERN ELEVATIONS
AS-436 ENLARGED TILE PATTERN ELEVATIONS
AS-437 ENLARGED TILE PATTERN ELEVATIONS
AS-441 EXISTING PLATFORM CEILING TILE DETAILS
AS-442 EXISTING PLATFORM CEILING TILE DETAILS
AS-451 RAILING PLAN, ELEVATIONS & DETAILS
AS-501 ELEVATOR ENCLOSURE PLANS, ELEVATIONS, AND SECTIONS
AS-502 ELEVATOR ENCLOSURE DETAILS
AS-503 ELEVATOR ENCLOSURE DETAILS
AS-504 ELEVATOR ENCLOSURE DETAILS
AS-505 ELEVATOR CAB DETAILS
AS-506 ELEVATOR DETAILS
AS-511 DETAILS
AS-512 DETAILS
AS-513 EXISTING LIGHT TRAY DETAILS
AS-514 DETAILS
AS-515 DETAILS
AS-521 PLANTER DETAILS
AS-522 PLANTER DETAILS
AS-601 SUBWAY ROOM FINISH & WINDOW/DOOR SCHEDULES
AS-602 SUBWAY WALL TYPES

ARCHITECTURAL GRAPHICS SUBWAY
AGS-101 SUBWAY SIGNAGE PLAN
AGS-102 SUBWAY SIGNAGE PLAN
AGS-103 SUBWAY SIGNAGE SCHEDULE

PLUMBING
P-000 PLUMBING SYMBOLS, NOTES & ABBREVIATIONS
P-100 PLUMBING - STREET LEVEL PLAN - CENTER
P-101 PLUMBING - MEZZANINE LEVEL PLAN
P-102 PLUMBING - PLATFORM LEVEL
P-103 PLUMBING - ROOF LEVEL
P-111 PLUMBING ENLARGED STREET LEVEL PLAN -WEST
P-112 PLUMBING ENLARGED STREET LEVEL PLAN - CENTER
P-113 PLUMBING ENLARGED STREET LEVEL PLAN - EAST
P-121 PLUMBING ENLARGED PLATFORM LEVEL PLAN - WEST
P-122 PLUMBING ENLARGED PLATFORM LEVEL PLAN - CENTER
P-123 PLUMBING ENLARGED PLATFORM LEVEL PLAN - EAST
P-131 ENLARGED PLUMBING ROOF PLAN - WEST
P-132 ENLARGED PLUMBING ROOF PLAN - CENTER
P-133 ENLARGED PLUMBING ROOF PLAN - EAST
P-134 VAULT DEMOLITION AND PLUMBING PLAN
P-200 PLUMBING SECTIONS AT COLUMNS
P-300 PLUMBING RISERS
P-301 PLUMBING RISERS
P-302 PLUMBING RISERS
P-303 PLUMBING RISERS
P-401 ENLARGED ELEVATOR ELV1 PLUMBING PLANS- NORTH
P-402 ENLARGED JANITOR CLOSET 103 PLUMBING PLANS - NORTH
P-403 ENLARGED ELEVATOR ELV2 PLUMBING PLANS- SOUTH
P-404 ENLARGED JANITOR CLOSET 113 PLUMBING PLANS - SOUTH
P-405 ESCALATOR 1 AND 2 PLUMBING PLAN AND DETAILS
P-406 ENLARGED ELECTRIC/COMMUNICATION ROOM PLANS
P-501 PLUMBING DETAILS
P-502 PLUMBING GUTTER/DOWNSPOUT DETAILS
P-503 PLUMBING DETAILS
P-504 PLUMBING DETAILS
P-601 PLUMBING SCHEDULE
P-602 PLUMBING SCHEDULE

PLUMBING SUBWAY
PS-101 PLUMBING MEZZANINE LEVEL NORTH NEW PLAN
PS-102 PLUMBING MEZZANINE LEVEL SOUTH NEW PLAN
PS-103 ENLARGED MEZZANINE PLAN - PLUMBING NORTH
PS-104 PLUMBING ELEVATOR ES-2 PLATFORM FLOOR PLAN
PS-105 PLUMBING ELEVATOR ES-1 PLAN AND DETAILS
PS-200 SUBWAY PLUMBING RISERS
PS-601 PLUMBING SCHEDULES

DESIGN BY:										
DRAWN BY:										
CHECKED BY:										
APPROVED BY:		4	7/3/2023	ISSUED FOR BID						
CDOT/APPROVED BY:		NO.	DATE	REVISIONS	DES.	DRW.	CHK.	DCCO	CDOT	

TRANSYSTEMS
222 SOUTH RIVERSIDE PLAZA SUITE 610
CHICAGO, ILLINOIS 60606

CHICAGO DEPARTMENT OF TRANSPORTATION
DIVISION OF ENGINEERING

STATE / LAKE LOOP ELEVATED STATION
200 NORTH STATE STREET, CHICAGO, IL 60601

SPEC. NO.

DRAWING INDEX

DRAWING NO. G-002

CDOT PROJECT D-1-209

DATE: 9/9/2022

REVISION NO.4

MECHANICAL

M-000 MECHANICAL SYMBOLS, NOTES & ABBREVIATIONS
M-100 MECHANICAL - STREET LEVEL WEST
M-101 MECHANICAL - STREET LEVEL CENTER
M-102 MECHANICAL - MEZZANINE LEVEL
M-103 MECHANICAL - PLATFORM LEVEL WEST
M-104 MECHANICAL - PLATFORM LEVEL EAST
M-105 MECHANICAL ROOF LEVEL WEST
M-401 ENLARGED MECHANICAL AREAS
M-402 ENLARGED MECHANICAL AREAS
M-403 ENLARGED MECHANICAL AREAS
M-404 ENLARGED MECHANICAL AREAS
M-405 ENLARGED MECHANICAL AREAS
M-501 MECHANICAL DETAILS
M-502 MECHANICAL DETAILS
M-503 MECHANICAL DETAILS
M-601 MECHANICAL SCHEDULE
M-602 MECHANICAL SCHEDULE

MECHANICAL SUBWAY

MS-101 MECHANICAL SUBWAY - MEZZANINE LEVEL NEW PLAN
MS-102 MECHANICAL SUBWAY - MEZZANINE LEVEL NEW PLAN

ELECTRICAL

E-001 SYMBOL LIST
E-002 GENERAL NOTES AND ABBREVIATIONS
E-003 ELECTRICAL CODE MATRIX
E-010 PLATFORM LEVEL - OVERALL PLAN
E-011 MEZZANINE LEVEL - OVERALL PLAN
E-012 STREET LEVEL - OVERALL PLAN
E-101 PLATFORM LEVEL - POWER PLAN - WEST
E-102 PLATFORM LEVEL - POWER PLAN - CENTER
E-103 PLATFORM LEVEL - POWER PLAN - EAST
E-104 STREET LEVEL - POWER PLAN - CENTER
E-105 STREET LEVEL - POWER PLAN - EAST
E-111 PLATFORM LEVEL - LIGHTING PLAN - WEST
E-112 PLATFORM LEVEL - LIGHTING PLAN - CENTER
E-113 PLATFORM LEVEL - LIGHTING PLAN - EAST
E-114 FLYOVER LEVEL - LIGHTING PLAN
E-115 STREET LEVEL - LIGHTING PLAN
E-121 PLATFORM LEVEL - FIRE ALARM PLAN - WEST
E-122 PLATFORM LEVEL - FIRE ALARM PLAN - CENTER
E-123 PLATFORM LEVEL - FIRE ALARM PLAN - EAST
E-124 FLYOVER LEVEL - FIRE ALARM PLAN
E-125 STREET LEVEL - FIRE ALARM PLAN
E-131 PLATFORM LEVEL - MONITORING AND ALARM PLAN - WEST
E-132 PLATFORM LEVEL - MONITORING AND ALARM PLAN - CENTER
E-133 PLATFORM LEVEL - MONITORING AND ALARM PLAN - EAST
E-134 STREET LEVEL - MONITORING AND ALARM PLAN
E-141 PLATFORM LEVEL - EQUIPMENT PLAN - WEST
E-142 PLATFORM LEVEL - EQUIPMENT PLAN - CENTER
E-143 PLATFORM LEVEL - EQUIPMENT PLAN - EAST
E-144 STREET LEVEL - EQUIPMENT PLAN
E-180 ELECTRICAL STREET LIGHTING GENERAL NOTES
E-181 ELECTRICAL CDOT STANDARD SYMBOL LIST
E-182 CDOT STREET LIGHTING REMOVAL PLAN - PART 1
E-183 CDOT STREET LIGHTING REMOVAL PLAN - PART 2
E-184 CDOT STREET LIGHTING UNDERGROUND CONDUIT AND FACILITIES PLAN - PART 1
E-184A CDOT STREET UNDERPASS CONDUIT AND FACILITIES PLAN - PART 1
E-184B CDOT STREET UNDERPASS CONDUIT AND FACILITIES PLAN - PART 2
E-185 CDOT STREET LIGHTING UNDERGROUND CONDUIT AND FACILITIES PLAN - PART 2
E-186 CDOT STREET LIGHTING INSTALLATION PLAN - PART 1
E-186A CDOT STREET UNDERPASS LIGHTING INSTALLATION PLAN - PART 1
E-186B CDOT STREET UNDERPASS LIGHTING INSTALLATION PLAN - PART 2
E-187 CDOT STREET LIGHTING INSTALLATION PLAN - PART 2
E-401 ENLARGED PLAN - MAIN ELECTRICAL ROOM
E-402 ENLARGED PLAN - COMMUNICATION ROOM AND ELECTRICAL CLOSETS
E-403 ENLARGED PLAN - ELECTRICAL CLOSETS
E-404 ENLARGED PLAN - ELECTRICAL ROOM LIGHTING
E-406 ENLARGED PLAN - ESCALATOR LIGHTING
E-407 ENLARGED PLAN - ELECTRICAL AND COMMUNICATIONS ROOMS FIRE ALARM
E-408 ENLARGED PLAN - ELECTRICAL AND COMMUNICATIONS ROOMS - MONITORING AND ALARM
E-409 ENLARGED PLAN - ELECTRICAL AND COMMUNICATIONS ROOMS - EQUIPMENT LAYOUT
E-410 ENLARGED PLAN - PLATFORM TO STREET STAIR LIGHTING
E-411 ENLARGED PLAN - CAK
E-412 ENLARGED PLAN - WEST PLATFORM ROOMS LIGHTING
E-413 ENLARGED PLAN - WEST CENTER STAIR LIGHTING
E-414 ENLARGED PLAN - EAST CENTER STAIR LIGHTING
E-501 DETAILS - SWITCHBOARD ELEVATIONS
E-502 DETAILS - GENERATOR TAP BOX
E-503 DETAILS - ACCESSIBLE ENTRANCE GATES
E-504 DETAILS - GROUNDING
E-505 DETAILS - GROUNDING SYSTEM
E-506 DETAILS - CONDUIT
E-507 DETAILS - ACCESS CONTROL DOOR
E-508 DETAILS - HEAT TRACE POWER CONNECTIONS
E-509 DETAILS - CAK ALARM PANEL
E-580 DETAILS - CDOT STANDARDS
E-581 DETAILS - CDOT STANDARDS
E-582 DETAILS - CDOT STANDARDS
E-583 DETAILS - CDOT STREET LIGHTING UNDERPASS LIGHTING INSTALLATION
E-584 DETAILS - DUCTBANK INSTALLATION DETAILS
E-601 ELECTRICAL SINGLE LINE DIAGRAM - PART 1 OF 3
E-602 ELECTRICAL SINGLE LINE DIAGRAM - PART 2 OF 3
E-603 ELECTRICAL SINGLE LINE DIAGRAM - PART 3 OF 3
E-604 SCHEDULES - LIGHTING FIXTURES
E-610 SCHEDULES - CITY LOAD CALCULATIONS
E-611 SCHEDULES - CABLE AND CONDUIT
E-612 SCHEDULES - EQUIPMENT SCHEDULE
E-613 SCHEDULES - SIGNAGE SCHEDULE
E-614 SCHEDULES - PANELS
E-615 SCHEDULES - PANELS
E-616 SCHEDULES - PANELS
E-617 SCHEDULES - PANELS
E-618 SCHEDULES - PANELS
E-619 SCHEDULES - PANELS
E-620 SCHEDULES - PANELS
E-621 SCHEDULES - PANELS
E-623 DIAGRAMS - HEAT TRACE PANEL WIRING PART 1
E-624 DIAGRAMS - HEAT TRACE PANEL WIRING PART 2
E-625 DIAGRAMS - HEAT TRACE PANEL WIRING PART 3
E-626 DIAGRAMS - HEAT TRACE PANEL WIRING PART 4
E-627 DIAGRAMS - ITC CABINET LAYOUT
E-628 DIAGRAMS - LIGHTING CONTROL PANEL WIRING
E-629 DIAGRAMS - ITC WIRING
E-630 DIAGRAMS - RELAY CONTROL PANEL DETAILS
E-631 DIAGRAMS - RELAY CONTROL PANEL WIRING
E-632 DIAGRAMS - MONITOR AND ALARM
E-633 DIAGRAMS - FIRE ALARM RISER
E-634 DIAGRAMS - INFRARED HEATER CONTROL WIRING SCHEMATICS
E-635 DIAGRAMS - ELEVATOR CONTROLS
E-636 DIAGRAMS - ESCALATOR CONTROLS
E-637 DIAGRAMS - FARE CONTROL EQUIPMENT BLOCK
E-638 DIAGRAMS - CONTROL DIAGRAMS
E-639 DIAGRAMS - CANOPY SNOW MELT PANEL WIRING DIAGRAM PART 1
E-640 DIAGRAMS - CANOPY SNOW MELT PANEL WIRING DIAGRAM PART 2
E-641 DIAGRAMS - CANOPY SNOW MELT PANEL WIRING DIAGRAM PART 3
E-642 DIAGRAMS - CANOPY SNOW MELT PANEL WIRING DIAGRAM PART 4
E-901 EM-1 AND EM-2 SINGLE LINE DIAGRAMS
E-902 EMERGENCY SCHEDULES
E-911 PLATFORM LEVEL - EMERGENCY LIGHTING PLAN - WEST
E-912 PLATFORM LEVEL - EMERGENCY LIGHTING PLAN - CENTER
E-913 PLATFORM LEVEL - EMERGENCY LIGHTING PLAN - EAST
E-914 FLYOVER LEVEL - EMERGENCY LIGHTING PLAN
E-915 ENLARGED PLAN - ELECTRICAL ROOM EMERGENCY LIGHTING
E-916 ENLARGED PLAN - ESCALATOR EMERGENCY LIGHTING
E-917 ENLARGED PLAN - PLATFORM TO STREET STAIR EMERGENCY LIGHTING
E-918 ENLARGED PLAN - WEST CENTER STAIR EMERGENCY LIGHTING
E-919 ENLARGED PLAN -EAST CENTER STAIR EMERGENCY LIGHTING

SPECIALTY LIGHTING

SL-102 STREET LEVEL LIGHTING PLAN - CENTER
SL-104 PLATFORM LEVEL LIGHTING PLAN - WEST
SL-105 PLATFORM LEVEL LIGHTING PLAN - CENTER
SL-106 PLATFORM LEVEL LIGHTING PLAN - EAST
SL-601 LIGHTING FIXTURE SCHEDULE
SL-602 ZONE SCHEDULE AND FIXTURE RISER DIAGRAM
SL-603 CONTROL RISER DIAGRAM

ELECTRICAL SUBWAY

ES-101 SUBWAY MEZZANINE POWER PLAN
ES-102 LAKE/RANDOLPH SUBWAY PLATFORM POWER PLAN
ES-111 SUBWAY MEZZANINE LIGHTING PLAN
ES-112 LAKE/RANDOLPH SUBWAY PLATFORM LIGHTING PLAN
ES-121 LAKE/RANDOLPH SUBWAY MEZZANINE MODIFIED FIRE ALARM PLAN
ES-122 LAKE/RANDOLPH SUBWAY STREET LEVEL AND PLATFORM FIRE ALARM PLANS
ES-131 LAKE/RANDOLPH SUBWAY MEZZANINE MONITORING AND ALARM PLAN
ES-132 LAKE/RANDOLPH SUBWAY PLATFORM MONITORING AND ALARM PLAN
ES-401 SUBWAY ENLARGED PLAN - MAIN ELECTRICAL ROOM
ES-402 SUBWAY ENLARGED PLANS - ELEVATOR ROOMS
ES-601 LAKE/RANDOLPH SUBWAY ELECTRICAL SINGLE LINE - MODIFICATIONS - PART 1
ES-602 LAKE/RANDOLPH SUBWAY ELECTRICAL SINGLE LINE MODIFICATIONS - PART 2
ES-603 LAKE/RANDOLPH SUBWAY ELECTRICAL PANEL SCHEDULES
ES-604 GENERATOR TAP BOX DETAIL - SUBWAY
ES-608 LAKE/RANDOLPH SUBWAY ITC DIAGRAM
ES-609 LAKE/RANDOLPH SUBWAY MODIFIED FIRE ALARM RISER DIAGRAM

TRACTION POWER

ET-001 TRACTION POWER ABBREVIATIONS, SYMBOLS, AND GENERAL NOTES
ET-101 TRACTION POWER - EXISTING SITE PLAN
ET-102 TRACTION POWER - PROPOSED SITE PLAN
ET-301 TRACTION POWER - BENT 452 ELEVATION
ET-401 TRACTION POWER - ENLARGED PLAN PROPOSED CABLE AND CONDUIT
ET-500 TRACTION POWER SYMBOL LIST - STP-004
ET-501 TRACTION POWER - STP-117 CONTACT RAIL TAPS ASSY AND DETAILS
ET-502 TRACTION POWER - STP-118 CONTACT RAIL TAPS ASSY AND DETAILS
ET-503 TRACTION POWER - STP-200 CABLE DETAILS
ET-504 TRACTION POWER - STP-201 CABLE DETAILS
ET-505 TRACTION POWER - STP-202 ELEVATED TRACK - CABLE DEAD END DETAILS
ET-506 TRACTION POWER - STP-203 ELEVATED TRACK - POSITIVE CABLE DEAD END DETAILS
ET-507 TRACTION POWER - STP-204 ELEVATED TRACK NEGATIVE CABLE DEAD END DETAILS
ET-508 TRACTION POWER - STP-207 TYPICAL AERIAL CABLE SUPPORT DETAILS
ET-509 TRACTION POWER - STP-208 TYPICAL AERIAL CABLE SUPPORT DETAILS
ET-510 TRACTION POWER - STP-209 ELEVATED TRACK CROSS ARM TIMBER AND SPOOL INSULATOR DETAILS (1 OF 2)
ET-511 TRACTION POWER - STP-210 ELEVATED TRACK CROSS ARM TIMBER AND SPOOL INSULATOR DETAILS (2 OF 2)
ET-512 TRACTION POWER - STP-309 KNIFE SWITCH MOUNTING AND INSTALLATION DETAILS
ET-513 TRACTION POWER - STP-404 STRUCTURE TO STRUCTURE BONDING DETAILS
ET-514 TRACTION POWER - STP-405 RAIL AND CABLE BONDING TO STRUCTURE
ET-515 TRACTION POWER - STP-406 NEGATIVE CABLE BONDING BJ EM SM TO STEEL INSIDE GUARD
ET-516 TRACTION POWER - STP-802 SWITCH PLATFORM BJ EM SM DETAILS
ET-517 TRACTION POWER - STP-803 SWITCH PLATFORM DETAILS
ET-518 TRACTION POWER - STP-902 TYPICAL CABLE DUCT/RISER AND MANHOLE DETAILS
ET-601 TRACTION POWER - EXISTING RAIL FEEDER DIAGRAM

TELECOM

T-001 GENERAL NOTES, ABBREVIATIONS AND SYMBOLS
T-010 PLATFORM LEVEL - OVERALL PLAN
T-011 MEZZANINE LEVEL - OVERALL PLAN
T-012 STREET LEVEL - OVERALL PLAN
T-101 PLATFORM LEVEL PLAN - WEST
T-102 PLATFORM LEVEL PLAN - CENTER
T-103 PLATFORM LEVEL PLAN - EAST
T-104 FLYOVER LEVEL PLAN
T-105 STREET LEVEL PLAN
T-111 EXISTING BACKBONE COMMUNICATIONS PLAN
T-112 PROPOSED BACKBONE COMMUNICATION PLAN
T-400 ENLARGED PLAN - NORTH AND SOUTH CUSTOMER ASSIST KIOSKS
T-402 MAIN COMMUNICATIONS ROOM ENLARGED PLAN
T-501 DETAILS - TYPE 1 SPEAKER
T-502 DETAILS - TYPE 2 AND 2A SPEAKERS
T-503 DETAILS - TELEPHONES
T-504 DETAILS - CCTV CAMERAS
T-505 DETAILS - DYNAMIC MESSAGE SIGN (DMS) - PLATFORM
T-506 DETAILS - MAIN COMMUNICATIONS CABINET - ELEVATION
T-507 DETAILS - MAIN COMMUNICATIONS CABINET - POWER
T-508 DETAILS - MAIN COMMUNICATIONS CABINET - UPS
T-509 DETAILS - MAIN COMMUNICATIONS CABINET - POWER ONE LINE
T-510 DETAILS - MAIN COMMUNICATIONS CABINET - FIBER SPLICE AND FDP
T-511 DETAILS - FIBER SLACK ENCLOSURE
T-512 DETAILS - HUB PANEL
T-513 DETAILS - WIRELESS ACCESS POINT
T-514 DETAILS - STANDARD WALL FIELD
T-515 DETAILS - UTILITY POLE FOR LIGHTING AND CAMERA
T-516 DETAILS - CAK AV CONSOLE
T-601 DIAGRAMS - PUBLIC ADDRESS SYSTEM
T-602 DIAGRAMS - TELEPHONE SYSTEM
T-603 DIAGRAMS - CCTV SYSTEM
T-604 DIAGRAMS - CARD READER SYSTEM
T-605 DIAGRAMS - BLOCK
T-606 DIAGRAMS - NETWORK CONNECTION
T-607 DIAGRAMS - FARE CONTROL EQUIPMENT BLOCK
T-608 DIAGRAMS - ELEVATOR

TELECOM SUBWAY

TS-101 LAKE/RANDOLPH SUBWAY MEZZANINE MODIFIED COMMUNICATIONS PLAN
TS-102 LAKE/RANDOLPH SUBWAY STREET LEVEL AND PLATFORM MODIFIED COMMUNICATIONS PLANS
TS-601 LAKE/RANDOLPH SUBWAY COMMUNICATIONS NETWORK DIAGRAM
TS-602 LAKE/RANDOLPH SUBWAY COMMUNICATIONS ELEVATOR DIAGRAM

TRAIN CONTROL

TC-001 TRAIN CONTROL TRACK AND CABLE PLAN REMOVALS
TC-002 TRAIN CONTROL TRACK AND CABLE PLAN INSTALLATIONS
TC-003 TYPICAL SIGNAL EQUIPMENT PLATFORM LAYOUT
TC-004 TYPICAL IMPEDANCE BOND IN GAUGE LAYOUT
TC-005 TYPICAL JUNCTION BOX PLATFORM – 1 OF 3
TC-006 TYPICAL JUNCTION BOX PLATFORM – 2 OF 3
TC-007 TYPICAL JUNCTION BOX PLATFORM – 3 OF 3
TC-008 TYPICAL RAIL CONNECTION AND BONDING DETAILS
TC-009 TYPICAL MESSENGER WIRE DETAILS – 1 OF 2
TC-010 TYPICAL MESSENGER WIRE DETAILS – 2 OF 2
TC-011 TYPICAL EXPRESS JUNCTION BOX DETAILS 1 OF 2
TC-012 TYPICAL EXPRESS JUNCTION BOX DETAILS 2 OF 2
TC-013 TOWER 18 - CAB APPLICATION CIRCUITS LP2-142T
TC-014 TOWER 18 - RACK 9 CABLE LAYOUT T1-T6
TC-015 JUNCTION BOX LAYOUT DETAIL JB 133B - LOOP STATION MARKER 133+16
TC-016 JUNCTION BOX LAYOUT DETAIL JB 137A - LOOP STATION MARKER 136+84
TC-017 JUNCTION BOX LAYOUT DETAIL JB 137B - LOOP STATION MARKER 136+84
TC-018 JUNCTION BOX LAYOUT DETAIL JB 142A - LOOP STATION MARKER 142+63
TC-019 JUNCTION BOX LAYOUT DETAIL JB 142B - LOOP STATION MARKER 142+63
TC-020 JUNCTION BOX LAYOUT DETAIL JB 146 - LOOP STATION MARKER 145+97
TC-021 JUNCTION BOX LAYOUT DETAIL JB 152 - LOOP STATION MARKER 152+56

NO.	DATE	REVISIONS	DES.	DRW.	CHK.	DCCO	CDOT
4	7/3/2023	ISSUED FOR BID					

DESIGN BY:
DRAWN BY:
CHECKED BY:
APPROVED BY:
CDOT/APPROVED BY:

TRANSYSTEMS
222 SOUTH RIVERSIDE PLAZA SUITE 610
CHICAGO, ILLINOIS 60606

CHICAGO DEPARTMENT OF TRANSPORTATION
DIVISION OF ENGINEERING

STATE / LAKE LOOP ELEVATED STATION
200 NORTH STATE STREET, CHICAGO, IL 60601

DRAWING INDEX

CDOT PROJECT D-1-209

DATE: 9/9/2022

SPEC. NO.

DRAWING NO. G-003

REVISION NO.4

GENERAL NOTES

1. THE GENERAL CONTRACTOR'S PRIMARY RESPONSIBILITY IN ALL PHASES OF THE PROJECT IS SAFETY. THE RESPONSIBILITY FOR SAFETY INCLUDES THE PATRONS AND EMPLOYEES OF THE CTA, CONTRACTOR'S EMPLOYEES AND ANY PERSON(S) WHO MAY ENTER UPON OR BE PROXIMATE TO THE WORK AREA, WHETHER OR NOT WORK IS IN PROGRESS.

2. THE COMMISSIONER EXPRESSLY DISCLAIMS ANY RESPONSIBILITY ARISING FROM ANY UNAUTHORIZED USE OF THESE DRAWINGS, PLANS, AND NOTES. ANY AUTHORIZATION MUST BE IN WRITING. THESE DRAWINGS MAY HAVE BEEN REPRODUCED AT A SIZE DIFFERENT THAN ORIGINALLY DRAWN.

3. THE COMMISSIONER DOES NOT GUARANTEE THE COMPLETENESS OR ACCURACY OF THE INFORMATION SHOWN ON THE DRAWINGS, INCLUDING UTILITIES. IT IS IMPERATIVE THAT THE CONTRACTORS FULLY FAMILIARIZE ITSELF WITH ALL EXISTING STRUCTURES, SEWER AND UTILITY LOCATIONS, SITE CONDITIONS, EXISTING BUILDING DRAWINGS, SURVEYS AND REPORTS. THE CONTRACT SHALL FIELD VERIFY ALL DIMENSIONS AND CONDITIONS SHOWN OR DESCRIBED TO BE EXISTING BY ITS OWN FIELD SURVEY PRIOR TO THE START OF SHOP DRAWING PREPARATION, FABRICATION OR SITE CONSTRUCTION. SUCH FIELD SURVEY DETERMINATION UTILIZING TEST PITS TO DETERMINE THE VERTICAL AND HORIZONTAL DIMENSIONAL LOCATIONS OF ALL POTENTIALLY AFFECTED UTILITIES. NOTIFY THE COMMISSIONER OF DISCREPANCIES IN WRITING BEFORE PROCEEDING WITH THE WORK.

4. THE COMMISSIONER WILL NOT BE RESPONSIBLE FOR NOR WILL HAVE ANY CONTROL OVER OR CHARGE OF QUALITY CONTROL, CONSTRUCTION MEANS, METHODS, TECHNIQUES, SEQUENCES, PHASING, OR PROCEDURES OF SAFETY PRECAUTIONS AND PROGRAMS IN CONNECTION WITH THE WORK, NOR WILL BE RESPONSIBLE FOR THE CONTRACTOR'S FAILURE TO CARRY OUT THE WORK IN ACCORDANCE WITH THE REQUIREMENTS OF THE CONTRACT DOCUMENTS. THE COMMISSIONER WILL NOT BE RESPONSIBLE FOR OR HAVE CONTROL OR CHARGE OVER THE ERRORS OR OMISSIONS OF THE CONTRACTOR, SUBCONTRACTORS, THEIR AGENTS, EMPLOYEES, OR ANY OTHER PERSON PERFORMING ANY OF THE WORK.

5. THE CONTRACTOR IS TO REVIEW AND HAVE A COMPLETE COMMAND OF THE VARIOUS PHASES OF THE CONSTRUCTION WORK PLUS A TOTAL UNDERSTANDING OF THE UNIQUE MANPOWER AND SUPPLY SCHEDULE REQUIREMENTS SPECIFIC TO THE SITE. THE CONTRACTOR MUST COORDINATE ALL CONSTRUCTION RELATED ACTIVITIES WITH TRAIN SCHEDULES, OPERATING REQUIREMENTS, AND ANY RESULTING HAZARDOUS CONDITIONS.

6. THE CONTRACTOR MUST PROVIDE ALL REQUIRED PERMITS NECESSARY FOR THE PROJECT AND COSTS SHALL BE CONSIDERED INCIDENTAL TO THE PROJECT. THE CONTRACTOR WILL PERFORM ALL WORK IN ACCORDANCE WITH THE LATEST EDITION OF THE CITY OF CHICAGO BUILDING CODE AND ALL APPLICABLE COUNTY, STATE, AND FEDERAL LAWS, CODES, ORDINANCES, AND REGULATIONS BY MUNICIPAL AUTHORITIES HAVING JURISDICTION, INCLUDING THE OCCUPATIONAL SAFETY AND HEALTH ACT (OSHA) AND REGULATIONS ADOPTED PURSUANT THERETO, STATE OF ILLINOIS ACCESSIBILITY STANDARDS AND ADA GUIDELINES, AS WELL AS APPLICABLE REQUIREMENTS OF THE CHICAGO TRANSIT AUTHORITY AND CHICAGO DEPARTMENT OF TRANSPORTATION AND OF THE LAWS, CODES, ORDINANCES AND REGULATIONS OF FEDERAL STATE AND MUNICIPAL AUTHORITIES HAVING JURISDICTION.

7. THE CONTRACTOR MAY BE REQUIRED TO PAY INSPECTION FEES TO THE VARIOUS DEPARTMENTS OF THE CITY OF CHICAGO. THE COST WILL BE CONSIDERED INCIDENTAL TO THE CONTACT.

8. THE CONTRACTOR MUST BE RESPONSIBLE FOR COORDINATION WITH THE COMMISSIONER REGARDING ALL NEW AND/OR REMEDIAL CONSTRUCTION INCLUDING BUT NOT LIMITED TO SIGNAL WORK, COMMUNICATIONS, ETC. THAT THE COMMISSIONER MAY HAVE IN PROGRESS WITHIN THE SAME PERIOD.

9. THE CONTRACTOR MUST COORDINATE AND CONFIRM WITH COMMISSIONER THE HOURS OF CONSTRUCTION AND RAILWAY OPERATIONS FOR THE ENTIRE SCHEDULE OF CONSTRUCTION.

10. THE CONTRACTOR MUST BE RESPONSIBLE FOR COORDINATION WITH WORK NOTED "(N.I.C.)", IF ANY, WHICH IS BEING PERFORMED UNDER SEPARATE CONTRACT WHERE IT INTERFACES WITH OR AFFECTS WORK UNDER THIS CONTRACT.

11. THE CONTRACTOR MUST BE RESPONSIBLE FOR SECURING THE JOB SITE AND THE PROTECTION OF THE GENERAL PUBLIC FROM ALL POSSIBLE HAZARDS OF THE ENTIRE CONSTRUCTION SITE.

12. IN THE EVENT OF A CONFLICT OR INCONSTANCY IN OR AMONG THE CONTRACT DOCUMENTS, OR BETWEEN CONTRACT DOCUMENTS AND APPLICABLE CODES IN THE EFFECT AT THE TIME THE CONTRACT SUM IS BID OR NEGOTIATED. THE CONTRACTOR SHALL NOTIFY THE COMMISSIONER DURING THE BIDDING PERIOD, OTHERWISE THE CONTRACTOR SHALL PROVIDE THE MATERIAL, EQUIPMENT OR WORK THAT REPRESENTS: THE GREATEST QUANTITY; HIGHEST QUALITY; HIGHEST DEGREE OF SAFETY; BEST PERFORMING AND ADHERENCE TO THE MOST STRINGENT CRITERIA AMONG THE CONFLICTING OR INCONSISTENT INFORMATION.

13. REFER TO THE TECHNICAL SPECIFICATIONS FOR ADDITIONAL INFORMATION AND COORDINATION OF THE WORK. IN THE EVENT OF DISCREPANCIES BETWEEN DRAWINGS OR DRAWINGS AND SPECIFICATIONS, CONSULT THE COMMISSIONER FOR CLARIFICATION DURING THE BID PERIOD BEFORE PROCEEDING WITH THE WORK.

14. THE CONTRACTOR MUST ASSURE ITSELF BY INDEPENDENT SURVEY THAT NO HAZARDOUS MATERIALS ARE HANDLED OR DISTRIBUTED. IF HAZARDOUS MATERIALS ARE ENCOUNTERED, IT MUST BE BROUGHT TO THE IMMEDIATE ATTENTION OF THE COMMISSIONER.

15. THE GENERAL CONTRACTOR AND/OR TRADE CONTRACTOR MUST PROTECT ALL EXISTING SITE ELEMENTS FROM DAMAGE DUE TO ALTERATIONS AND CONSTRUCTION OPERATIONS, AND REPAIR OR REPLACE ELEMENTS DAMAGED DURING THIS PROJECT AT HIS/HER OWN EXPENSE.

16. DRAWINGS ARE TO BE ISSUED TO THE SUBCONTRACTORS BY THE CONTRACTOR IN COMPLETE SETS SO THAT THE EXTENT AND COORDINATION OF WORK IS CLEAR.

17. THE CONTRACTOR WILL BE RESPONSIBLE FOR STREET CLEANING, LITTER REMOVAL/PUBLIC TRASH COLLECTION, AND SNOW REMOVAL WITHIN THE LIMITS OF THE WORK ZONE.

18. THE CONTRACTOR SHALL VISIT THE SITE AND BE KNOWLEDGEABLE OF ALL CONDITIONS THEREON. THE CONTRACTOR SHALL INVESTIGATE, VERIFY, AND BE RESPONSIBLE FOR ALL CONDITIONS OF THE PROJECT AND SHALL NOTIFY THE COMMISSIONER OF ANY CONDITIONS REQUIRING MODIFICATION OR CLARIFICATION BEFORE PROCEEDING WITH THE WORK. NOTES APPEAR ON VARIOUS SHEETS FOR DIFFERENT SYSTEMS AND MATERIALS: NOTES REFER TO RELATED STRUCTURAL/MEP AND DETAIL DRAWINGS. THESE SHEETS ARE TO BE REVIEWED AND NOTES ON ANY ONE SHEET ARE TO BE APPLIED ON RELATED DRAWINGS AND DETAILS. WHERE DISCREPANCIES EXIST WITHIN THE CONTRACT DOCUMENTS AND/OR BETWEEN THE DRAWINGS OF VARIOUS DISCIPLINES, CONSULT THE COMMISSIONER DURING THE BID PERIOD FOR CLARIFICATION AND PRIOR TO PROCEEDING WITH THE WORK.

19. DRAWINGS THAT REPRESENT THE EXISTING PLAN CONDITIONS ARE DIAGRAMMATICALLY SHOWN. EXACT LOCATIONS, SIZES, EXTENT, AND CONDITIONS OF EXISTING CONSTRUCTION TO BE REMOVED, RELOCATED OR TO REMAIN SHALL BE VERIFIED AT THE SITE BY THE CONTRACTOR.

20. AS-BUILT PLANS WILL BE SUBMITTED SOON AFTER WORK COMPLETION. FINAL PAYMENT WILL NOT BE MADE TO THE CONTRACTOR UNTIL THE COMMISSIONER ACKNOWLEDGES RECEIPT OF AS-BUILD PLANS. CONTRACTOR WILL SUBMIT A COMPLETE SET OF AS-BUILT PLANS. CONTRACTOR WILL SUBMIT COMPLETE SET OF AS-BUILT DRAWINGS AND COMPLETE SET OF PLANS ON A CD IN PDF FORMAT TO COMMISSIONER, OR AS DESCRIBED IN THE SPECIFICATIONS.

GENERAL PHASING NOTES

1. NO WORK WILL BE ALLOWED AT THE PLATFORM BEFORE A CONSTRUCTION PHASING PLAN WITH MATERIAL/EQUIPMENT STAGING PLAN IS APPROVED BY COMMISSIONER

2. NO WORK WILL BE ALLOWED DURING SPECIAL EVENTS AND NATIONAL HOLIDAYS. SEE SPECIFICATIONS 01 35 00 SPECIAL PROJECT PROCEDURES FOR A LIST OF THESE EVENTS.

3. GENERAL CONTRACTOR MUST COMPLETE WORK PER TIME SCHEDULE IN THE SPECIFICATIONS AND/OR PHASING SCHEDULE. NOTIFY THE COMMISSIONER TWO WEEKS PRIOR TO THE BEGINNING OF EACH PHASE.

4. BERTHING MARKERS SHALL BE LOCATED AND INSTALLED BY CTA FORCES.

5. CONTRACTORS WORK MUST NOT INTERFERE WITH CTA OPERATIONS.

6. THE GENERAL CONTRACTOR WILL BE ALLOWED TO STORE MATERIALS AND EQUIPMENT ONLY IN AREAS APPROVED BY THE COMMISSIONER AND IN ACCORDANCE WITH CTA REQUIREMENTS AND THE CONTRACT DOCUMENTS.

7. REMOVE ALL DEMOLITION DEBRIS AND DELIVER ALL MATERIALS THROUGH NON-PASSENGER AREAS. NO ESCALATOR OR ELEVATOR WILL BE USED TO CONVEY MATERIALS OR EQUIPMENT.

8. ALL WORK IS TO BE PERFORMED BEHIND A FULL-HEIGHT BARRICADE.

9. AREAS OF CONSTRUCTION TO BE FULLY-BARRICADED AND LOCKED. MAINTAIN BARRICADE SIGNAGE DURING CONSTRUCTION.

10. GRAFFITI WITHIN CONSTRUCTION LIMITS, INCLUDING ON SIGNS OR BARRICADES, MUST BE REMOVED BY THE CONTRACTOR WITHIN 24 HOURS.

11. BARRICADE AND STORAGE AREA WALL DESIGN, CONSTRUCTION AND INSTALLATION SHALL BE DONE TO WITHSTAND 30 PSF WIND LOADS (100 MPH). CONTRACTOR TO SUBMIT DETAIL DESIGNS PRIOR TO BARRICADE CONSTRUCTION, FOR COMMISSIONER REVIEW AND APPROVAL.

12. ALL LUMBER MUST BE FIRE-RETARDANT TREATED AND PAINTED WITH FIRE-RESISTANT (RATED) PAINT. ALL WOOD AND PLYWOOD USED SHOULD BE OF AC-X GRADE AND SHOULD BE FIRE-RATED.

13. BARRICADE AND WALL PANELING SHALL BE ACX PLYWOOD OR EQUAL. ALL EXPOSED PANEL SURFACES TO BE PAINTED CDOT GRAY UNLESS PROJECT CALLS FOR SPECIFIC GRAPHICS OR COLORS.

14. ALL HARDWARE FOR GATES AND BARRICADES TO BE CTA COMPATIBLE.

15. GATE BARRICADES BETWEEN CORE WALLS AND EDGES OF PLATFORM SHALL NOT BE OBSTRUCTED AND SHALL BE OPERABLE AS EMERGENCY EGRESS BY CTA PERSONNEL/PATRONS AT ALL TIMES.

16. THE USE OF CTA TOILETS IS PROHIBITED.

17. CONTRACTOR MUST PROVIDE AND MAINTAIN TEMPORARY SIGNAGE, LIGHTING AND SPEAKER SYSTEM (EXISTING SYSTEMS MAY ACT AS TEMPORARY IF NOT IN CONFLICT WITH NEW CONSTRUCTION) UNTIL NEW SYSTEMS ARE FULLY OPERATIONAL. EXISTING SYSTEMS CANNOT BE REMOVED UNTIL TEMPORARY SIGNAGE, LIGHTING AND SPEAKER SYSTEM ARE APPROVED AND FUNCTIONING.

18. ALL UNFINISHED WORK MUST BE PROPERLY SECURED IN PLACE AND PRESENT NO DANGER TO CTA PATRONS, PERSONNEL AND EQUIPMENT. AT EACH WORK PERIOD COMPLETION, THE CONTRACTOR SHALL REMOVE AND/OR PLACE INTO THE STORAGE AREA ALL CONSTRUCTION EQUIPMENT, MATERIALS, DEBRIS AND CLEAR THE AREA FOR CTA OPERATIONS. IF THE CONTRACTOR USES ANY PARTIALLY OR COMPLETELY FINISHED WORK AREA FOR STORAGE, CARE SHALL BE TAKEN TO AVOID DAMAGE TO SUCH WORK. ANY DAMAGE WILL BE REPAIRED OR REPLACED AT THE CONTRACTOR'S EXPENSE.

19. NO FUEL-POWERED EQUIPMENT OF ANY KIND MAY BE USED AT ANY BELOW GROUND LEVELS.

20. PUBLIC EXITING ON THE PLATFORM MUST BE MAINTAINED ALONG ONE SIDE OF THE BARRICADED CONSTRUCTION ZONE AT ALL TIMES.

21. PROTECT ALL EXISTING CTA EQUIPMENT, TRAIN SIGNALS, BERTHING MARKERS AND PANELS SUCH AS STATION ID SIGNS, ETC. DURING WORK.

22. WITHIN THE CONTRACTOR'S WORK AREA THERE WILL BE A CLEAR PATH AT ALL TIMES. THIS PATH MUST BE SIGNED, LIT AND HAVE EMERGENCY LIGHTING.

23. TEMPORARY REMOVAL OR RELOCATION OF SECURITY CAMERAS REQUIRES THE WRITTEN APPROVAL OF CTA. THE MAXIMUM ALLOTMENT OF TIME FOR INTERRUPTION TO SERVICE IS FORTY-EIGHT HOURS AND SIGN OFF FROM CTA IS REQUIRED AFTER RE-INSTALLATION.

GENERAL DEMOLITION NOTES

1. THE CONTRACTOR IS TO PERFORM DEMOLITION SCOPE OF WORK AS REQUIRED TO COMPLETE NEW CONSTRUCTION. COORDINATE ARCHITECTURAL DEMOLITION WITH CIVIL, STRUCTURAL, MECHANICAL, ELECTRICAL, COMMUNICATIONS, AND PLUMBING DEMOLITION SCOPE OF WORK.

2. DEMOLITION WORK TO BE COORDINATED WITH THE COMMISSIONER.

3. DUMPSTER PLACEMENT LOCATIONS MUST BE APPROVED BY THE COMMISSIONER.

4. THE CONTRACTOR MUST NOTIFY THE COMMISSIONER IN WRITING OF ANY DISCREPANCIES ON THE DRAWINGS OR THE UNCOVERING OF HIDDEN CONDITIONS WHICH MAY AFFECT THE WORK.

5. ITEMS OF CONSTRUCTION SHOWN AND NOTED TO BE REMOVED SHALL REPRESENT ALL SIMILAR CONDITIONS AND CONSTRUCTION UNLESS NOTED OTHERWISE.

6. DO NOT REMOVE OR ALTER ANY EXISTING STRUCTURAL MEMBER OR PORTION OF THE STRUCTURAL FLOOR SYSTEM UNLESS SPECIFICALLY NOTED OR SHOWN ON THE CONTRACT DOCUMENTS.

7. THE CONTRACTOR MUST NEATLY SAW CUT ALL MASONRY WALLS AND CONCRETE FLOORS IN A CLEAN AND STRAIGHT MANNER.

8. CONTRACTOR MUST PROVIDE CONTAINMENT INCLUDING CONSTRUCTION BARRICADES OR OTHER DUST COLLECTION METHODS TO PREVENT DUST GENERATED FROM DEMOLITION OR CONSTRUCTION FROM ENTERING THE PORTIONS OF THE STATION NOT UNDER CONSTRUCTION AND SUBWAY SYSTEM.

9. CONTRACTOR MUST PAY ALL APPLICABLE PERMIT FEES AND COSTS RELATED TO REMOVAL AND INSTALLATION.

10. ANSI A-10.6 "SAFETY REQUIREMENTS FOR DEMOLITION" WILL GOVERN EXCEPT AS OTHERWISE MODIFIED HEREIN. WHERE THE REQUIREMENTS SPECIFIED HEREIN OR CONTAINED IN THE ANSI STANDARD DIFFER FROM OTHER APPLICABLE RULES, REGULATIONS, AND CODES, THE MORE STRINGENT REQUIREMENTS SHALL GOVERN THE WORK UNDER THIS CONTRACT.

11. PROVIDE, ERECT, AND MAINTAIN TEMPORARY WORK INCLUDING, BUT NOT LIMITED TO BARRICADES, WARNING SIGNS, ETC. AS REQUIRED FOR PROPER PROTECTION OF THE PUBLIC AND PROPERTY DURING REMOVAL OPERATIONS.

12. PROVIDE ADEQUATE FIRE PROTECTION IN ACCORDANCE WITH THE CITY FIRE DEPARTMENT REQUIREMENTS.

13. ALL DEMOLITION INDICATED TO BE REMOVED MUST BE REMOVED CAREFULLY. ANY ADJACENT MATERIAL DAMAGED SHALL BE REPLACED IN KIND AT THE CONTRACTOR'S EXPENSE.

14. MATERIAL AND/OR ITEMS REMOVED AND NOT DESIGNATED TO BECOME THE PROPERTY OF THE COMMISSIONER WILL BECOME THE PROPERTY OF THE CONTRACTOR AND REMOVED FROM THE JOB SITE. DELIVER ALL ITEMS DESIGNATED AS "SALVAGE" OR "REMIT" TO STORAGE SITES DESIGNATED BY COMMISSIONER. COORDINATE DELIVERY WITH COMMISSIONER.

15. NO BURNING OF MATERIAL ON THE PREMISES WILL BE PERMITTED.

16. UPON COMPLETION OF REMOVAL WORK, REMOVE ALL TOOLS, MATERIALS, APPARATUS, AND RUBBISH OF ANY SORT. THE JOB SITE MUST BE LEFT CLEAN, REMOVE RUBBISH EVERY DAY.

DESIGN BY:										
DRAWN BY:		4	7/3/2023	ISSUED FOR BID						
CHECKED BY:										
APPROVED BY:		0	9/9/2022	ISSUED FOR PERMIT	MN	KH	SD			
CDOT/APPROVED BY:		NO.	DATE	REVISIONS	DES.	DRW.	CHK.	DCCO	CDOT	

TRANSYSTEMS
222 SOUTH RIVERSIDE PLAZA SUITE 610
CHICAGO, ILLINOIS 60606

SKIDMORE, OWINGS & MERRILL LLP
224 SOUTH MICHIGAN AVENUE, SUITE 1000
CHICAGO, ILLINOIS 60604

JOHNSON LASKY KINDELIN ARCHITECTS
230 WEST HURON STREET, SUITE 510
CHICAGO, ILLINOIS 60654

CHICAGO DEPARTMENT OF TRANSPORTATION
DIVISION OF ENGINEERING

STATE / LAKE LOOP ELEVATED STATION
200 NORTH STATE STREET, CHICAGO, IL 60601

SPEC. NO.

GENERAL NOTES

DRAWING NO.
G-004

CDOT PROJECT D-1-209

DATE: 9/9/2022

REVISION NO.

DIMENSION NOTES

1. ALL DIMENSIONS ARE FACE OF PARTITIONS, COLUMN CENTERLINE, OR FINISHED FACE OF EXTERIOR WALL UNLESS NOTED OTHERWISE.

2. THE EXISTING TRACK BENT COLUMN TO COLUMN SPACING VARIES. DIMENSIONS SHOWN INDICATE THE "GRID" DIMENSIONS, EXISTING CONDITION SURVEY INFORMATION ONLY. THE CONTRACTOR SHALL CONDUCT ITS OWN FIELD SURVEY TO ESTABLISH EXISTING DIMENSIONAL PARAMETERS AS RELATES TO THE DESIGN BEFORE PROCEEDING WITH THE WORK. NOTIFY THE COMMISSIONER IN WRITING OF DISCREPANCIES WHICH WILL NOT ALLOW EXECUTION OF THE DESIGN AS SHOWN.

3. ALL DIMENSIONS SHALL BE VERIFIED IN THE FIELD BEFORE PROCEEDING WITH ANY WORK. THE COMMISSIONER SHALL BE NOTIFIED OF ANY DISCREPANCIES OR CORRECTIONS. DIMENSIONS OF NEW WORK ARE BASED ON RECORD DRAWINGS OF EXISTING WORK. ANY DISCREPANCIES IN EXISTING WORK WILL AFFECT NEW WORK DIMENSIONS. CONTRACTOR TO VERIFY EXISTING CONDITIONS. WHERE SPECIFIC DIMENSIONS, DETAILS, OR DESIGN INTENT CANNOT BE DETERMINED, CONSULT THE COMMISSIONER IN WRITING BEFORE PROCEEDING WITH THE WORK.

4. ALL DIMENSIONS, ELEVATIONS, REPRESENTATIONS OF THE SITE, EXISTING CONDITIONS, AND AS-BUILT DRAWINGS ARE BASED ON INFORMATION OBTAINED FROM COMMISSIONER AND THE PROJECT SURVEY. THIS INFORMATION IS AVAILABLE FOR THE CONTRACTOR'S CONVENIENCE AND INFORMATION ONLY. THE REFERENCED DOCUMENTS ARE ASSUMED TO BE REASONABLY ACCURATE. HOWEVER, SOME VARIATIONS BETWEEN DRAWINGS AND FIELD CONDITIONS MUST BE ANTICIPATED AND ALLOWED FOR.

5. IT IS IMPERATIVE THAT THE CONTRACTOR FULLY FAMILIARIZE ITSELF WITH ALL EXISTING SITE CONDITIONS, SURVEYS, AND REPORTS. THE CONTRACTOR MUST FIELD VERIFY ALL DIMENSIONS AND CONDITIONS SHOWN OR DESCRIBED TO BE EXISTING BY ITS OWN FIELD SURVEY PRIOR TO THE START OF SHOP DRAWINGS PREPARATION, FABRICATION, OR SITE CONSTRUCTION. NOTIFY THE COMMISSIONER OF DISCREPANCIES IN WRITING BEFORE PROCEEDING WITH WORK.

6. DIMENSIONS WILL GOVERN; DO NOT SCALE DRAWINGS.

ARCHITECTURAL NOTES

1. WHEN NOTED ON THE DRAWINGS OR IN THE SPECIFICATION THE CONTRACTOR SHALL PROVIDE MOCKUPS WHICH COMMISSIONER APPROVAL PRIOR TO FABRICATION OF THE INSTALLED WORK. MOCKUPS MAY ONLY BECOME PART OF THE FINAL WORK AT THE CONTACTOR'S REQUEST AND THE COMMISSIONER'S APPROVAL.

2. ALL FIRE RATINGS INDICATED FOR WALLS, CEILINGS, AND ROOF ARE TO COMPLY WITH UNDERWRITERS LABORATORIES TEST RATINGS OR AS REGULATED BY CITY OF CHICAGO BUILDING CODE AND NFPA 130 – FIXED GUIDE WAY TRANSIT SYSTEMS.

3. ELEMENTS SHALL BE SHOP FABRICATED TO THE GREATEST EXTENT POSSIBLE AND SHIPPED PROTECTED TO REDUCE FIELD WELDING AND FIELD TOUCH UP.

4. DETAILS SHOWN DO NOT NECESSARILY GRAPHICALLY REPRESENT ALL COMPONENTS NECESSARY TO COMPLETE THE TOTAL SYSTEM. THE CONTRACTOR SHALL BE RESPONSIBLE TO COORDINATE ALL THE REQUIREMENTS SHOWN ON THE DRAWINGS WITH THOSE STATED IN THE APPLICABLE SPECIFICATIONS AND PROJECT NOTES TO PROVIDE A COMPLETE SYSTEM.

5. DETAILS SHOWN ARE INTENDED TO BE INDICATIVE OF THE PROFILES AND TYPE OF DETAILING REQUITED FOR THE WORK. CONDITIONS NOT COVERED BY SPECIFIC DETAILS ARE SIMILAR IN CHARACTER AND QUALITY TO THOSE DETAILED AND SHALL MEET SPECIFIED DESIGN CRITERIA.

6. ANY DETAILS, SYSTEMS, OR MATERIALS (I.E. ARCHITECTURAL, STRUCTURAL, MECHANICAL, ETC.) WHICH ARE PROPOSED TO BE CHANGED OR SUBSTITUTED MUST BE FIRST REVIEWED AND APPROVED BY THE COMMISSIONER PRIOR TO THE PREPARATION AND SUBMITTAL OF SHOP DRAWINGS. THE COMMISSIONER RESERVES THE RIGHT TO REJECT SUBSTITUTIONS. THE CONTRACTOR IS RESPONSIBLE FOR ADDED JOB COSTS DUE TO SUBSTITUTIONS IMPACT ON OTHER TRADES.

7. THE CONTRACTOR MUST BE RESPONSIBLE FOR PROVIDING ALL REQUIRED BLOCKING, SUPPORTS, AND BRACING REQUIRED TO ACHIEVE SPECIFIED REQUIREMENTS AND STANDARDS WHETHER SPECIFICALLY INDICATED OR NOT. FIRE RETARDANT BLOCKING MUST BE PROVIDED.

8. ALL NEW GUARDRAILS AND HANDRAILS MUST MEET OSHA, NIOSH, AND ADA GUIDELINES, 200 PSF LIVE LOAD SAFETY CODE REQUIREMENTS, AND CITY OF CHICAGO SIMULTANEOUS HORIZONTAL AND VERTICAL HANDRAIL REQUIREMENTS.

9. ALL DISSIMILAR METALS MUST BE EFFECTIVELY ISOLATED FROM EACH OTHER TO AVOID GALVANIC ACTION.

10. ALL EXTERIOR FERROUS METAL WORK LOCATED ON EXTERIOR OR IN NON-CONDITIONED INTERIOR SPACES MUST BE STAINLESS STEEL, GALVANIZED STEEL MINIMUM G60 UNLESS OTHERWISE NOTED, UNLESS FERROUS METAL IS SCHEDULED TO BE PRE-FINISHED OR PAINTED PER PAINTING SPECIFICATIONS.

11. THE CONTRACTOR MUST COORDINATE ALL MECHANICAL AND ELECTRICAL FLOOR AND WALL SLEEVES, FLOOR PENETRATIONS, EMBEDDED CONDUIT AND MECHANICAL DUCTWORK WITH MECHANICAL, PLUMBING, FIRE PROTECTION, ELECTRICAL, STRUCTURAL, AND ARCHITECTURAL DISCIPLINES.

12. PROVIDE ACCESS PANELS AS REQUIRED BY APPLICABLE CODES AND AS REQUIRED FOR MECHANICAL AND ELECTRICAL EQUIPMENT.

13. ALL PIPES, CONDUITS, AND DUCTWORK THAT PENETRATE WALLS OR ROOF SLABS SHALL BE INSTALLED IN A MANNER THAT WILL PRESERVE THE FIRE RESISTIVE, STRUCTURAL INTEGRITY, AND WATER-TIGHTNESS OF SUCH SYSTEMS, WALLS OR SLABS AND THE BUILDING OR STRUCTURE. FIRESTOP ALL PENETRATIONS IN WALLS TO MATCH HOURLY RATING OF WALL.

14. DETAILS NOT SHOWN ARE SIMILAR IN CHARACTER TO THOSE SHOWN: WHERE SPECIFIC DIMENSIONS, DETAILS, OR DESIGN INTENT CANNOT BE DETERMINED, CONSULT THE COMMISSIONER BEFORE PROCEEDING WITH WORK.

15. FINISH FLOOR ELEVATIONS NOTED ARE BASED ON THE CHICAGO CITY DATUM (CCD), UNLESS NOTED OTHERWISE. FINISH FLOOR ELEVATIONS INDICATED ON THE DRAWINGS ARE DERIVED FROM INFORMATION PROVIDED BY THE COMMISSIONER AND CONSULTANT SURVEY. THE FINAL ELEVATIONS FOR ALL ELEMENTS OF THE PROJECT ARE DEPENDENT UPON EXISTING CONDITIONS "AS BUILT" AT THE TIME OF DRAWING OPERATIONS. CONTRACTOR MUST ALLOW FOR AND CONFIRM FINAL ELEVATIONS WITH THE COMMISSIONER BEFORE PROCEEDING WITH THE WORK.

16. ALL ELEVATOR AND ESCALATOR DIMENSIONS SHALL BE REVIEWED AND CERTIFIED BY THE SUBCONTRACTOR PRIOR TO FORMING. REQUIRED CLARIFICATIONS SHALL BE BROUGHT TO THE ATTENTION OF THE COMMISSIONER FOR APPROVAL PRIOR TO COMMENCING THE WORK.

DESIGN BY:										
DRAWN BY:		4	7/3/2023	ISSUED FOR BID						
CHECKED BY:										
APPROVED BY:		0	9/9/2022	ISSUED FOR PERMIT	MN	KH	SD			
CDOT/APPROVED BY:		NO.	DATE	REVISIONS	DES.	DRW.	CHK.	DCCO	CDOT	

TRANSYSTEMS
222 SOUTH RIVERSIDE PLAZA SUITE 610
CHICAGO, ILLINOIS 60606

SKIDMORE, OWINGS & MERRILL LLP
224 SOUTH MICHIGAN AVENUE, SUITE 1000
CHICAGO, ILLINOIS 60604

JOHNSON LASKY KINDELIN ARCHITECTS
230 WEST HURON STREET, SUITE 510
CHICAGO, ILLINOIS 60654

CHICAGO DEPARTMENT OF TRANSPORTATION
DIVISION OF ENGINEERING

STATE / LAKE LOOP ELEVATED STATION
200 NORTH STATE STREET, CHICAGO, IL 60601

SPEC. NO.

GENERAL NOTES

DRAWING NO.
G-005

CDOT PROJECT D-1-209

DATE: 9/9/2022

REVISION NO.

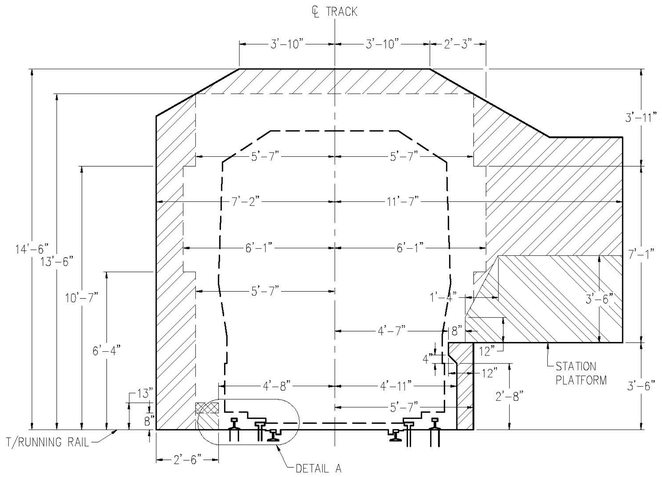

NOTES:

1. RIGHT SIDE OF DRAWING DETAILS PLATFORM SIDE OF STATION AREAS.
2. LEFT SIDE OF DRAWING DETAILS WALKWAY SIDE OF STATION AREAS.

- THIS AREA FOR INTERMITTENT OCCUPANCY BY SIGNALS, SIGNS, LIGHTS, AND COMMUNICATIONS EQUIPMENT
- 13'-6" CLEARANCE PERTMITTED FOR STATION CANOPIES, OR AS SPECIFIED BY THE ENGINEER
- THIS AREA FOR INTERMITTENT OCCUPANCY OF SWITCH STANDS
- THIS AREA FOR SIGNAL EQUIPMENT, POWER DISTRIBUTION, ETC.
- THIS AREA PLATFORM HANDRAILS ONLY

1 / 4.CLR-2 CLEARANCE - BOARDING AREA

SCALE: 3/8" = 1'-0"

NOTE: NTS AS PLOTTED FULL SCALE ON THIS SHEET G-005

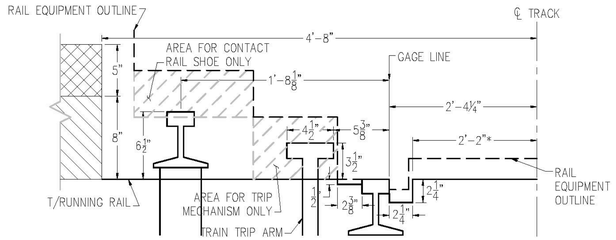

* NOTE: EXCEPTION TO 2'-2" DIMENSION IS AT INSTALLATIONS OF RESTRAINING GUARD RAIL WHERE WHEEL FLANGE IS INTENDED TO MAKE CONTACT. IN THIS CASE, DIMENSION SHALL BE 2'-2 3/8" SO THAT FLANGEWAY DIMENSION IS EQUAL TO 1 7/8".

2 / 4.CLR-2 DETAIL A

SCALE: NTS

INFRASTRUCTURE DESIGN CRITERIA MANUAL CHAPTER 4 – CIVIL	CTA STANDARD CLEARANCE DIAGRAM BOARDING AREA	FIGURE 4.CLR-2
cta ENGINEERING DEPARTMENT	IN CHARGE J. HARPER; APPROVED BY; CHECKED BY; DESIGNED BY; DRAWN BY 02 MAY 2014 REVISION; PROJECT NO 20 APR 2006 REVISION; FILE NAME CIVILFIG4–CLR–2	MARK DATE DESCRIPTION

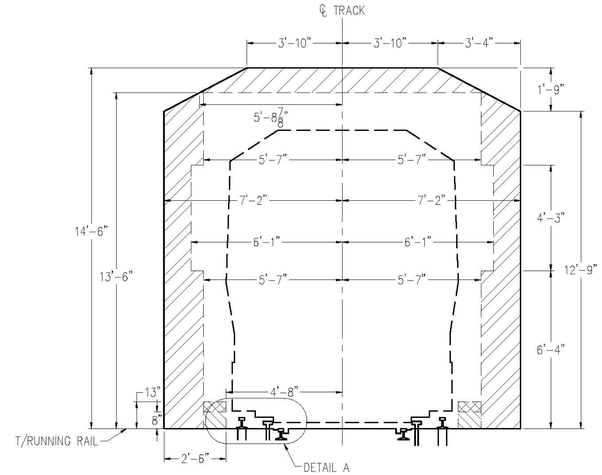

- THIS AREA FOR INTERMITTENT OCCUPANCY BY SIGNALS, SIGNS, LIGHTS, AND COMMUNICATIONS EQUIPMENT
- 13'-6" CLEARANCE PERTMITTED FOR STATION CANOPIES, OR AS SPECIFIED BY THE ENGINEER
- THIS AREA FOR INTERMITTENT OCCUPANCY OF SWITCH STANDS
- THIS AREA FOR SIGNAL EQUIPMENT, POWER DISTRIBUTION, ETC.

1 / 4.CLR-1 CLEARANCE - NON-BOARDING AREA

SCALE: 3/8" = 1'-0"

NOTE: NTS AS PLOTTED FULL SCALE ON THIS SHEET G-005

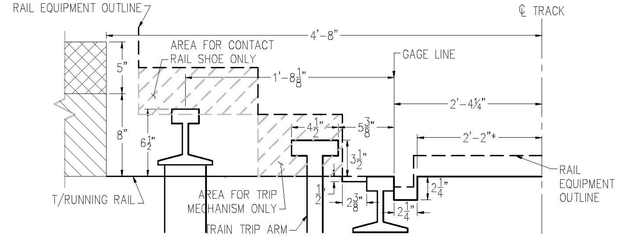

* NOTE: EXCEPTION TO 2'-2" DIMENSION IS AT INSTALLATIONS OF RESTRAINING GUARD RAIL WHERE WHEEL FLANGE IS INTENDED TO MAKE CONTACT. IN THIS CASE, DIMENSION SHALL BE 2'-2 3/8" SO THAT FLANGEWAY DIMENSION IS EQUAL TO 1 7/8".

2 / 4.CLR-1 DETAIL A

SCALE: NTS

INFRASTRUCTURE DESIGN CRITERIA MANUAL CHAPTER 4 – CIVIL	CTA STANDARD CLEARANCE DIAGRAM NON–BOARDING AREA	FIGURE 4.CLR-1
cta ENGINEERING DEPARTMENT	IN CHARGE J. HARPER; APPROVED BY; CHECKED BY; DESIGNED BY; DRAWN BY 02 MAY 2014 REVISION; PROJECT NO 07 APR 2006 REVISION; FILE NAME CIVILFIG4–CLR–1	MARK DATE DESCRIPTION

N:\CIVIL\GIBBS\DESIGN–CRITERIA\ATTACHMENTS\CIVILFIG4–CLR–2.DWG PLOTTED ON: 2014/05/05, 11:36

N:\CIVIL\GIBBS\DESIGN–CRITERIA\ATTACHMENTS\CIVILFIG4–CLR–1.DWG PLOTTED ON: 2014/05/05, 11:36

DESIGN BY:										
DRAWN BY:		4	7/3/2023	ISSUED FOR BID						
CHECKED BY:										
APPROVED BY:		0	9/9/2022	ISSUED FOR PERMIT	MN	KH	SD			
CDOT/APPROVED BY:		NO.	DATE	REVISIONS	DES.	DRW.	CHK.	DCCO	CDOT	

TRANSYSTEMS
222 SOUTH RIVERSIDE PLAZA SUITE 610
CHICAGO, ILLINOIS 60606

SKIDMORE, OWINGS & MERRILL LLP
224 SOUTH MICHIGAN AVENUE, SUITE 1000
CHICAGO, ILLINOIS 60604

CHICAGO DEPARTMENT OF TRANSPORTATION
DIVISION OF ENGINEERING

STATE / LAKE LOOP ELEVATED STATION
200 NORTH STATE STREET, CHICAGO, IL 60601

CTA STANDARD CLEARANCE DIAGRAM

CDOT PROJECT D-1-209 | DATE: 9/9/2022

SPEC. NO.

DRAWING NO. G-006

REVISION NO.

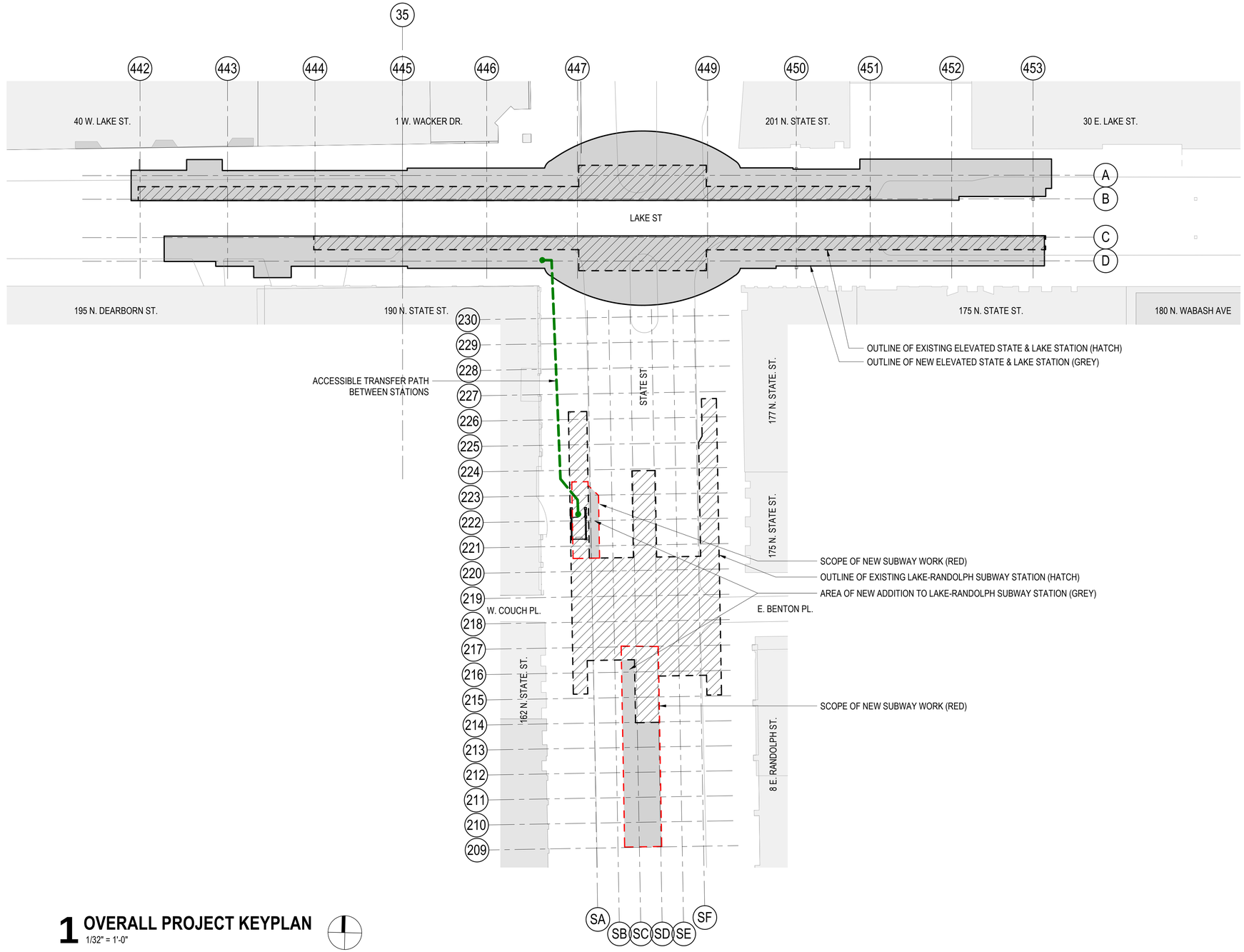

1 OVERALL PROJECT KEYPLAN

1/32" = 1'-0"

DESIGN BY:										
DRAWN BY:										
CHECKED BY:										
APPROVED BY:		4	7/3/2023	ISSUED FOR BID	KP	KP	NL			
CDOT/APPROVED BY:		NO.	DATE	REVISIONS	DES.	DRW.	CHK.	DCCO	CDOT	

TRANSYSTEMS
222 SOUTH RIVERSIDE PLAZA SUITE 610
CHICAGO, ILLINOIS 60606

LICENSED ARCHITECT
QUENTIN PETERSEN
001.024066
STATE OF ILLINOIS

CHICAGO DEPARTMENT OF TRANSPORTATION
DIVISION OF ENGINEERING

STATE / LAKE LOOP ELEVATED STATION
200 NORTH STATE STREET, CHICAGO, IL 60601

OVERALL PROJECT KEYPLAN

CDOT PROJECT D-1-209

DATE: 9/9/2022

SPEC. NO.

DRAWING NO. G-051

REVISION NO. 4

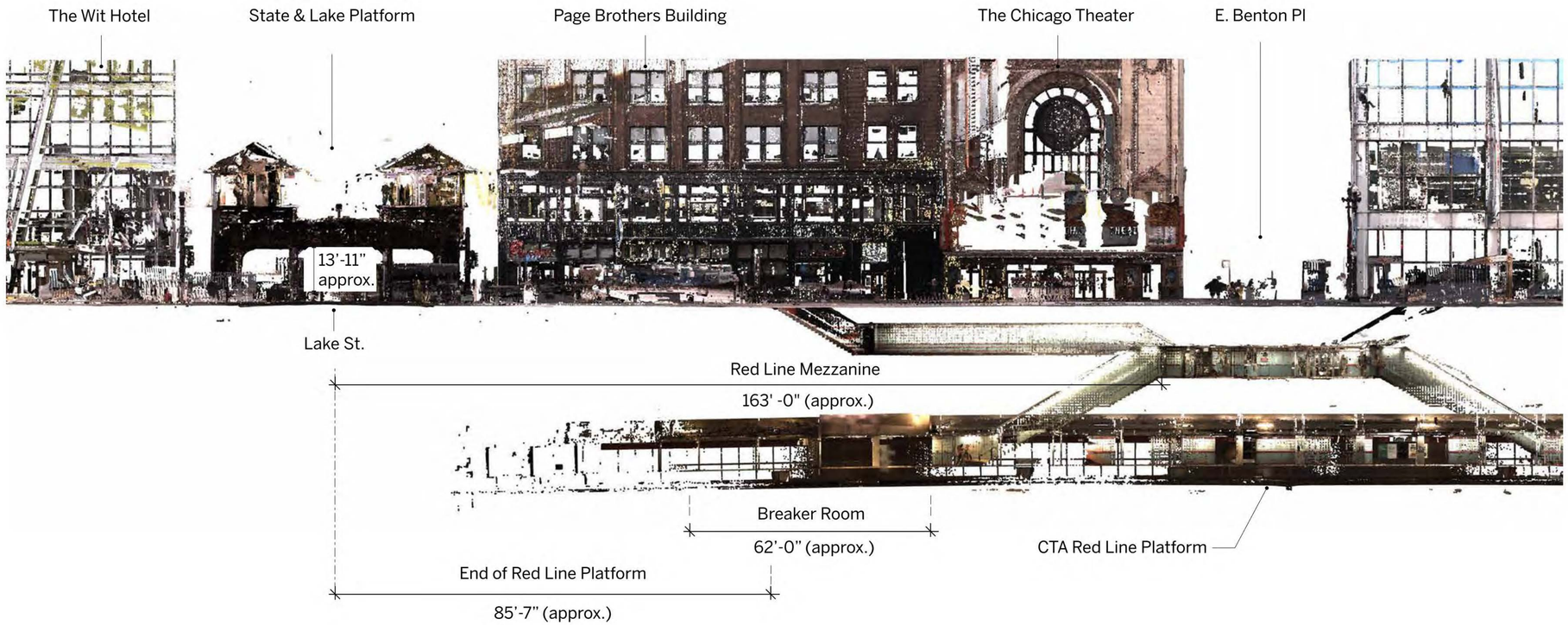

FOR REFERENCE ONLY

1 STATE ST N-S EXISTING SECTION FROM SURVEY

DESIGN BY:										
DRAWN BY:										
CHECKED BY:										
APPROVED BY:		4	7/3/2023	ISSUED FOR BID	KP	KP	NL			
CDOT/APPROVED BY:		NO.	DATE	REVISIONS	DES.	DRW.	CHK.	DCCO	CDOT	

TRANSYSTEMS
222 SOUTH RIVERSIDE PLAZA SUITE 610
CHICAGO, ILLINOIS 60606

LICENSED ARCHITECT
QUENTIN PETERSEN
001.024068
STATE OF ILLINOIS

CDOT
CHICAGO DEPARTMENT OF TRANSPORTATION
DIVISION OF ENGINEERING

STATE / LAKE LOOP ELEVATED STATION
200 NORTH STATE STREET, CHICAGO, IL 60601

EXISTING SECTION

CDOT PROJECT D-1-209 | DATE: 9/9/2022

SPEC. NO.

DRAWING NO. G-052

REVISION NO. 4

GENERAL BUILDING REQUIREMENTS FOR STATE/LAKE LOOP ELEVATED STATION- BASED ON CHICAGO ZONING ORDINANCE (CZO) AND 2019 CHICAGO BUILDING CODE (CBC)

ITEM	ISSUE	CHAPTER/ARTICLE	ORDINANCE/CODE REQUIREMENT	ACTUAL	REQUIREMENT N/A	REMARKS
				DX-16		
1.01	ZONING DISTRICT	CZO TITLE 17				
1.02	LOT AREA				X	
1.03	MAXIMUM FLOOR AREA RATIO				X	
1.04	TOTAL BUILDING AREA				X	
1.05	MAXIMUM BUILDING HEIGHT - NO OF FLOORS			2	X	
1.06	MIN YARDS/SETBACKS				X	
1.07	GRADE ELEVATION (CCD)			14'-7"		
1.08	OFF STREET LOADING				X	
1.09	OFF STREET PARKING				X	
1.10	LANDSCAPING	17-11				
	BUILDING REQUIREMENTS					
2.01	OCCUPANCY CLASSIFICATIONS	303.4		ASSEMBLY GROUP A-3 (WAITING AREAS IN TRANSPORTATION TERMINALS)		
2.02	GENERAL BUILDING HEIGHT AND AREA LIMITATIONS	503				
2.03	ALLOWABLE HEIGHT ABOVE GRADE PLANE	504.3	A3, NON SPRINKLERED, TYPE II-B CONSTRUCTION TYPE = 30 FEET MAX			
2.04	ALLOWABLE NUMBER OF STORIES ABOVE GRADE PLANE	504.4	A3, NON SPRINKLERED, TYPE II-B CONSTRUCTION TYPE = 1 STORY MAX			
2.05	ALLOWABLE BUILDING AREA	506.2	A3, NON SPRINKLERED, TYPE II-B CONSTRUCTION TYPE = 8500 SQ FT MAX			
2.06	ACCESSORY OCCUPANCIES	508.2	NO SEPARATION IS REQUIRED BETWEEN ACCESSORY OCCUPANCIES AND MAIN OCCUPANCY. **EXCEPTIONS:** H-1, H-2, H-3, H-4 and H-5 SHALL BE SEPARATED FROM ALL OTHER OCCUPANCIES PER 508.4. GROUP A OCCUPANCIES WITH AN OCCUPANT LOAD OF 300 OR MORE SHALL BE SEPARATED FROM OTHER OCCPANCIES BY 2 HOUR RATED CONSTRUCTION.			
2.07	INCIDENTAL USES	509	INCIDENTAL USES ARE ANCILLARY FUNCTIONS ASSOCIATED WITH A GIVEN OCCUPANCY THAT GENERALLY POSE A GREATER LEVEL OF RISK TO THAT OCCUPANCY AND ARE LIMITED TO THOSE USES LISTED IN TABLE 509.			
2.08	CONSTRUCTION CLASSIFICATION	602	TYPE II-B	TYPE II-B		
2.09	EXTERIOR BEARING WALLS	TABLE 13-60-100	3 HOURS	3 HOURS		
2.10	FIRE -RESISTANCE RATING REQUIREMENTS -BUILDING ELEMENTS					
	PRIMARY STRUCTURAL FRAME	TABLE 601	0 HOURS	0 HOURS		
	INTERIOR BEARING WALLS	TABLE 601	0 HOURS	0 HOURS		
	EXTERIOR BEARING WALLS	TABLE 601	0 HOURS	0 HOURS		
	NONBEARING WALLS AND PARTITIONS - EXTERIOR	TABLE 601	0 HOURS	0 HOURS		
	NONBEARING WALLS AND PARTITIONS - INTERIOR	TABLE 601	0 HOURS	0 HOURS		
	FLOOR CONSTRUCTION & ASSOCIATED SECONDARY MEMBERS	TABLE 601	0 HOURS	0 HOURS		
	ROOF CONSTRUCTION & ASSOCIATED SECONDARY MEMBERS	TABLE 601	0 HOURS	0 HOURS		
2.11	FIRE-RESISTANCE RATINGS AND FIRE TESTS	703	MATERIALS PRESCRIBED HEREIN FOR FIRE RESISTANCE SHALL CONFORM TO THE REQUIREMENTS OF THIS CHAPTER. THE FIRE-RESISTANCE RATING OF BUILDING ELEMENTS, COMPONENTS OR ASSEMBLIES SHALL BE DETERMINED IN ACCORDANCE WITH THE TEST PROCEDURES SET FORTH IN ASTM E119 OR UL 263 OR IN ACCORDANCE WITH SECTION 703.3. THE FIRE-RESISTANCE RATING OF PENETRATIONS AND FIRE-RESISTANT JOINT SYSTEMS SHALL BE DETERMINED IN ACCORDANCE SECTIONS 714 AND 715, RESPECTIVELY.			
2.12	EXTERIOR WALLS - FIRE RESISTANCE RATINGS	705.5	EXTERIOR WALLS SHALL BE FIRE-RESISTANCE RATED IN ACCORDANCE WITH TABLES 601 AND 602 (NON LOAD BEARING 602 ONLY)	0 HOURS FOR ASSEMBLY OCCUPANCY SPACES PER TABLE 602 (ALL PORTIONS OF EXTERIOR ARE GREATER THAN 10' MINIMUM FIRE SEPARATION DISTANCE, OCCUPANCY GROUP A, CONSTRUCTION TYPE II-B) REFER TO FLS PLANS FOR RATINGS OF NON ASSEMBLY SPACES.		
2.13	FIRE BARRIER (SHAFT ENCLOSURES)	707.3.1, 713.4	2 HOURS WHERE CONNECTING 4 STORIES OR MORE, AND 1 HOUR WHERE CONNECTING LESS THAN 4 STORIES (EXCEPT: WHERE SHAFTS CONTAIN ONLY NONCOMBUSTIBLE PIPES, NONCOMBUSTIBLE CONDUIT OR IRON, STEEL OR ALUMINUM DUCTS REQUIRING FLOOR PENETRATIONS NOT EXCEEDING 9 SQUARE FEET (0.8 M2) PER STORY, THE SHAFT ENCLOSURES CONNECTING ANY NUMBER OF STORIES SHALL HAVE A FIRE-RESISTANCE RATING OF NOT LESS THAN 1 HOUR.	1 HOURS		
2.14	PENETRATIONS IN A FIRE BARRIER	707.7	PENETRATIONS OF FIRE BARRIERS SHALL COMPLY WITH SECTION 714.	FIRESTOP SYSTEM SHALL HAVE A FIRE RATING OF NOT LESS THAN THE REQUIRED FIRE-RESISTANCE RATING OF THE WALL PENETRATED		
2.15	JOINTS IN A FIRE BARRIER	707.8	JOINTS MADE IN OR BETWEEN FIRE BARRIERS, AND JOINTS MADE AT THE INTERSECTION OF FIRE BARRIERS WITH UNDERSIDE OF A FIRE-RESISTANCE-RATED FLOOR OR ROOF SHEATHING, SLAB OR DECK ABOVE, AND THE EXTERIOR VERTICAL WALL INTERSECTION SHALL COMPLY WITH SECTION 715.	TIME PERIOD MATCHING THE RATING OF THE FIRE BARRIER IN WHICH THE SYSTEM IS INSTALLED		
2.16	VOIDS AT INTERSECTIONS OF A FIRE BARRIER	707.9	THE VOIDS CREATED AT THE INTERSECTION OF A FIRE BARRIER AND A NONFIRE-RESISTANCE-RATED ROOF ASSEMBLY OR A NONFIRE-RESISTANCE-RATED EXTERIOR WALL ASSEMBLY SHALL BE FILLED. THE MATERIAL OR SYSTEM USED TO FILL THE VOID SHALL BE SECURELY INSTALLED IN OR ON THE INTERSECTION FOR ITS ENTIRE LENGTH SO AS NOT TO DISLODGE, LOOSEN OR OTHERWISE IMPAIR ITS ABILITY TO ACCOMMODATE EXPECTED BUILDING MOVEMENTS AND TO RETARD THE PASSAGE OF FIRE AND HOT GASES.			
2.17	SEPARATING INCIDENTAL USES	711.2.4.5	WHERE THE HORIZONTAL ASSEMBLY SEPARATAES INCIDENTAL USES FROM THE REMAINDER OF THE BUILDING, THE ASSEMBLY SHALL HAVE A FIRE-RESISTANCE RATING OF NOT LESS THAN THAT REQUIRED BY SECTION 509.			
2.18	NONFIRE-RESISTANCE-RATED FLOOR AND ROOF ASSEMBLIES	711.3	ASSEMBLIES SHALL BE OF MATERIALS PERMITTED BY THE BUILDING TYPE OF CONSTRUCTION (TYPE II-B)	NON-COMBUSTIBLE		
2.19	SHAFT ENCLOSURES	713	2 HOURS WHERE CONNECTING 4 STORIES OR MORE, AND 1 HOUR WHERE CONNECTING LESS THAN 4 STORIES (EXCEPT: WHERE SHAFTS CONTAIN ONLY NONCOMBUSTIBLE PIPES, NONCOMBUSTIBLE CONDUIT OR IRON, STEEL OR ALUMINUM DUCTS REQUIRING FLOOR PENETRATIONS NOT EXCEEDING 9 SQUARE FEET (0.8 M2) PER STORY, THE SHAFT ENCLOSURES CONNECTING ANY NUMBER OF STORIES SHALL HAVE A FIRE-RESISTANCE RATING OF NOT LESS THAN 1 HOUR.	1 HOURS		
2.20	EXTERIOR WALLS SERVING AS PART OF SHAFT ENCLOSURES	713.6	WHERE EXTERIOR WALLS SERVE AS A PART OF A REQUIRED SHAFT ENCLOSURE, SUCH WALLS SHALL COMPLY WITH THE REQUIREMENTS OF SECTION 705 FOR EXTERIOR WALLS AND THE FIRE-RESISTANCE-RATED ENCLOSURE REQUIREMENTS SHALL NOT APPLY.	0 HOURS (PER 713.6 ELEVATOR SHAFT ENCLOSURE AS EXTERIOR WALL EXEMPT TO 713, BUT MUST COMPLY WITH SECTION 705 - SEE RELATED NOTES ABOVE RE ARTICLE 705.5)		
2.21	PENETRATIONS	714	PENETRATIONS INTO OR THROUGH FIRE WALLS, FIRE BARRIERS, SMOKE BARRIER WALLS AND FIRE PARTITIONS SHALL COMPLY WITH SECTIONS 714.4.1 THROUGH 714.4.3. PENETRATIONS IN SMOKE BARRIER WALLS SHALL ALSO COMPLY WITH SECTION 714.5.4.			
2.22	FIRESTOP SYSTEMS IN PENETRATIONS OF FIRE-RESISTANCE RATED WALLS	714.4.1.2	THROUGH PENETRATIONS SHALL BE PROTECTED BY AN APPROVED PENETRATION FIRESTOP SYSTEM INSTALLED AS TESTED IN ACCORDANCE WITH ASTM E814 OR UL 1479, WITH A MINIMUM POSITIVE PRESSURE DIFFERENTIAL OF 0.01 INCH (2.49 PA) OF WATER AND SHALL HAVE AN F RATING OF NOT LESS THAN THE REQUIRED FIRE-RESISTANCE RATING OF THE WALL PENETRATED.	FIRESTOP SYSTEM SHALL HAVE A FIRE RATING OF NOT LESS THAN THE REQUIRED FIRE-RESISTANCE RATING OF THE WALL PENETRATED		
2.23	OPENING PROTECTIVES	716	OPENINGS IN FIRE BARRIERS (SHAFTS): 2 HR FIRE BARRIER - 1.5 HR FIRE DOOR 1 HR FIRE BARRIER - 1 HR FIRE DOOR OPENINGS IN OTHER FIRE BARRIERS: 1 HR FIRE BARRIER - 3/4 HR FIRE DOOR			
2.24	INTERIOR WALL AND CEILING FINISH	803	INTERIOR WALL AND CEILING FINISH MATERIALS SHALL BE CLASSIFIED FOR FIRE PERFORMANCE AND SMOKE DEVELOPMENT IN ACCORDANCE WITH SECTION 803.1.1 OR 803.1.2, EXCEPT AS SHOWN IN SECTIONS 803.1.3 THROUGH 803.15. MATERIALS TESTED IN ACCORDANCE WITH			
2.25	INTERIOR FLOOR FINISH	804	INTERIOR FLOOR FINISH AND FLOOR COVERING MATERIALS SHALL COMPLY WITH SECTIONS 804.2 THROUGH 804.4.2. **EXCEPTION:** FLOOR FINISHES AND COVERINGS OF A TRADITIONAL TYPE, SUCH AS WOOD, VINYL, LINOLEUM OR TERRAZZO, AND RESILIENT FLOOR COVERING MATERIALS THAT ARE NOT COMPRISED OF FIBERS.			
2.26	DECORATIVE MATERIALS AND TRIM	806	MATERIAL, OTHER THAN FOAM PLASTIC USED AS INTERIOR TRIM, SHALL HAVE A MINIMUM CLASS C FLAME SPREAD AND SMOKE-DEVELOPED INDEX WHEN TESTED IN ACCORDANCE WITH ASTM E84 OR UL 723, AS DESCRIBED IN SECTION 803.1.2. COMBUSTIBLE TRIM, EXCLUDING HANDRAILS AND GUARDRAILS, SHALL NOT EXCEED 10 PERCENT OF THE SPECIFIC WALL OR CEILING AREA TO WHICH IT IS ATTACHED. **INTERIOR FLOOR-WALL BASE.** INTERIOR FLOOR-WALL BASE THAT IS 6 INCHES (152 MM) OR LESS IN HEIGHT SHALL BE TESTED IN ACCORDANCE WITH SECTION 804.2 AND SHALL BE NOT LESS THAN CLASS II. WHERE A CLASS I FLOOR FINISH IS REQUIRED, THE FLOOR-WALL BASE SHALL BE CLASS I. **EXCEPTION:** INTERIOR TRIM MATERIALS THAT COMPLY WITH SECTION 806.7.			

ITEM	ISSUE	CHAPTER/ARTICLE	ORDINANCE/CODE REQUIREMENT	ACTUAL	REQUIREMENT N/A	REMARKS
	MEANS OF EGRESS	**CHAPTER 10**				
3.01	CEILING HEIGHT	1003.2	7 FT 6 IN MIN HEIGHT			
3.02	STAIR HEADROOM	1011.3				
3.03	DOOR HEIGHT	1010.1.1				
3.04	POST MOUNTED OBJECTS AND HORIZONTAL PROJECTIONS	1003.3.2, 1003.3.3	NOT TO EXTEND MORE THAN 4" HORIZONTALLY WHERE MORE THAN 27 IN AND LESS THAN 80 IN ABOVE FINISHED FLOOR			
3.05	ELEVATION CHANGE	1003.5	AT CHANGES IN ELEVATION OF LESS THAN 12 INCHES SLOPED SURFACES SHALL BE USED. RAMPS SHALL COMPLY WITH SECTION 1012. EXCEPTIONS PROVIDED FOR LOCATIONS NOT REQUIRED TO BE ACCESSIBLE.			
3.06	ELEVATORS AND ESCALATORS	1003.7	ELEVATORS AND ESCALATORS SHALL NOT BE USED AS EGRESS COMPONENTS			
3.07	OCCUPANT LOAD	1004	ASSEMBLY STANDING SPACE 5 NET SF/OCCUPANT MECHANICAL EQUIPMENT ROOMS 300 GROSS SF/OCCUPANT	REFER TO SHEET G-104 FOR OCCUPANT LOAD PER PLATFORM	X	FOLLOW NFPA 130; 5.3.2 (REFER TO SHEET G-104)
3.08	STAIRWAY CAPACITY	1005.3.1	0.3 INCH PER OCCUPANT	REFER TO SHEET G-104 FOR CAPACITY CALCULATIONS	X	FOLLOW NFPA 130 5.3.3 (REFER TO SHEET G-104)
3.09	EXIT DOOR CAPACITY	1005.3.2	0.2 INCH PER OCCUPANT	REFER TO SHEET G-104 FOR CAPACITY CALCULATIONS	X	FOLLOW NFPA 130 5.3.3 (REFER TO SHEET G-104)
3.10	DOOR ENCROACHMENT	1005.7.1	DOORS IN ANY POSITION SHALL NOT REDUCE REQUIRED EXIT WIDTH BY MORE THAN ONE-QUARTER.			
3.11	OTHER PROJECTIONS	1005.7.2	NON STRUCTURAL PROJECTIONS SUCH AS TRIM AND DECORATIVE FEATURES NOT MORE THAN 1.5 INCHES PROJECTION INTO REQUIRED			
3.12	COMMON PATH OF TRAVEL	1006.2.1	A3, NON SPRINKLERED: 75 FEET MAXIMUM			
3.13	ACCESSIBLE MEANS OF EGRESS	1009	AT LEAST TWO REQUIRED. INCLUDES STAIRS COMPLYING WITH 1009.3 AND ELEVATORS COMPLYING WITH SECTION 1009.4	AREA OF REFUGE AT STAIRS AND ELEVATORS NOT REQUIRED WITH APPLICATION OF EXCEPTION FOR OPEN AIR ASSEMBLY		
3.14	DOORS, GATES AND TURNSTILES	1010				
	SIZE OF DOORS	1010.1.1	MINIMUM CLEAR OPENING 32 INCHES, MEASURED BETWEEN FACE OF DOOR AND STOP WITH DOOR OPEN 90 DEGREES.			
	DIRECTION OF SWING	1010.1.2.1	SHALL SWING IN THE DIRECTION OF TRAVEL WHERE SERVING A ROOM OCCUPANT LOAD OF 50 OR MORE OR GROUP H OCCUPANCY			
	PANIC AND EXIT HARDWARE REQUIRED	1010.1.10	REQUIRED WITH AN OCCUPANT LOAD OF 50 OR MORE IN OCCUPANCY TYPE A			
3.15	TURNSTILES	1010.3	CAPACITY 50 PERSONS, MUST TURN FREELY IN THE DIRECTION OF EGRESS, ACCESSIBLE TURNSTILE MUST BE AT LEAST 36 INCHES CLEAR			
3.16	STAIRWAYS	1011				
	MINIMUM STAIRWAY WIDTH	1011.2	44 INCHES MINIMUM. 48 INCHES MINIMUM WHERE STAIR FORMS PART OF AN ACCESSIBLE MEANS OF EGRESS. STAIRWAYS SERVING OCCUPANT LOAD LESS THAN 50 TO BE 36 INCHES MINIMUM.			
	STAIRWAY HEADROOM	1011.3	7 FEET MINIMUM MEASURED FROM EDGE OF NOSING			
	RISER HEIGHT AND TREAD DEPTH	1011.5.2	7 INCHES MAXIMUM RISE; 11 INCHES MINIMUM DEPTH MEASURED BETWEEN NOSINGS			
	NOSING PROFILE	1011.5.5	CURVATURE OR BEVEL NOT LESS THAN 1/16 AND NOT MORE THAN 9/16 INCH.			
	RISER PROFILE	1011.5.5	SOLID AND VERTICAL OR SLOPED NOT MORE THAN 30 DEGREES FROM VERTICAL			
	LANDINGS	1011.6	LANDING DEPTH 48 INCHES OR WIDTH OF STAIR WHICHEVER IS LESS.			
	OPENINGS IN STAIR WALKING SURFACE	1011.7.1	SHALL NOT PERMIT PASSAGE OF 1/2 INCH DIA SPHERE			
	OUTDOOR CONDITIONS	1011.7.2	STAIRWAYS AND APPROACHES TO STAIRWAYS SHALL BE DESIGNED SO THAT WATER WILL NOT ACCUMULATE ON WALKING SURFACES			
	ENCLOSURES UNDER INTERIOR STAIRWAYS	1011.7.3	WALL AND SOFFITS OF ENCLOSURE 1 HOUR FIRE RATED			
	ENCLOSURES UNDER EXTERIOR STAIRWAYS	1011.7.4	WALL AND SOFFITS OF ENCLOSURE 1 HOUR FIRE RATED			
	VERTICAL RISE	1011.8	12 FEET MAX BETWEEN LEVELS OR LANDINGS			
3.17	HANDRAILS	1011.11	HANDRAILS REQUIRED ON EACH SIDE			
	HANDRAIL HEIGHT	1014.2	34 TO 38 INCHES MEASURED ABOVE STAIR TREAD NOSINGS			
	HANDRAIL GRASPABILITY	1014.3	CIRCULAR CROSS SECTION DIAMETER 1-1/4 INCHES MINIMUM, 2 INCHES MAXIMUM.			
	HANDRAIL CONTINUITY	1014.4	HANDRAIL GRIPPING SURFACES SHALL BE CONTINUOUS			
	HANDRAIL EXTENSIONS	1014.6	HORIZONTAL EXTENSION 12 INCHES BEYOND TOP RISER. CONTINUED SLOPE DEPTH OF ONE TREAD BEYOND BOTTOM RISER.			
	HANDRAIL PROJECTIONS	1014.8	PROJECTIONS INTO REQUIRED WIDTH NO MORE THAN 4-1/2 INCHES EACH SIDE			
	INTERMEDIATE HANDRAILS	1014.9	INTERMEDIATE HANDRAILS SUCH THAT ALL PORTIONS OF MINIMUM WIDTH ARE WITHIN 30 INCHES OF A HANDRAIL			
3.18	GUARDS	1015	REQUIRED ALONG OPEN-SIDED WALKING SURFACES LOCATED MORE THAN 30 INCHES TO THE FLOOR OR GRADE BELOW			
	HEIGHT OF GUARDS	1015.3	NOT LESS THAN 42 INCHES			
	OPENING LIMITATIONS	1015.4	SHALL NOT ALLOW PASSAGE OF 4 INCH DIAMETER SPHERE (TRIANGULAR OPENINGS FORMED BY RISER AND TREAD SPHERE 6 INCHES)			
3.19	EXIT ACCESS TRAVEL DISTANCE	1017	A3, NON SPRINKLERED, = 200 FEET MAX	325' PER NFPA 130	X	FOLLOW NFPA 130 5.3.3.4 (325' MAX)
	ACCESSIBILITY		PROJECT TO COMPLY WITH ICC A117.1-2009 AS MODIFIED BY 2019 CHICAGO BUILDING CODE CHAPTER 11			
			PROJECT TO COMPLY WITH ILLINOIS ACCESSIBILITY CODE (IAC) 2018			
	CHANGES IN LEVEL	303	CHANGES IN LEVEL UP TO 1/4" MAY BE VERTICAL & W/OUT EDGE TREATMENT. CHANGES BETWEEN 1/4" & 1/2": BEVELED, MAX. SLOPE 1:2 CHANGES IN LEVEL GREATER THAN 1/2": MEET REQUIREMENTS FOR RAMPS			
	FORWARD REACH	308.2	UNOBSTRUCTED FORWARD APPROACH, MAX. HIGH FORWARD REACH IS 48 INCHES.			
	SIDE REACH	308.3	UNOBSTRUCTED PARALLEL APPROACH, MAX. HIGH FORWARD REACH IS 48 INCHES.			
	PASSAGE WIDTH	403.5	36 INCHES MINIMUM			
	TURNING RADIUS	403.5.2	60 INCHES MINIMUM			
	PASSING WIDTH	403.5.3	60 INCHES FOR TWO WHEELCHAIRS TO PASS			
	DOOR WIDTH	404.2.3	32 INCHES MINIMUM CLEAR			
	MANEUVERING CLEARANCES AT DOORS	404.2.4	PROJECT TO COMPLY WITH 404			
	RAMP SLOPE	405.2	1:12 MAX			
	RAMP CLEAR WIDTH	405.5	36 INCHES MINIMUM CLEAR BETWEEN HANDRAILS			
	RAMP RISE	405.6	30 INCHES MAXIMUM RISE BETWEEN LANDINGS			
	RAMP LANDINGS	405.7	WIDTH AT LEAST AS WIDE AS RAMP; LENGTH 60 INCHES MINIMUM			
	RAMP CHANGE IN DIRECTION	405.7.4	60 INCHES BY 60 INCHES MINIMUM			
	HANDRAILS	505.2	HANDRAILS REQUIRED ON BOTH SIDES OF STAIRS AND RAMPS			
	HANDRAIL CONTINUITY	505.3	HANDRAILS SHALL BE CONTINUOUS WITHIN THE FULL LENGTH OF STAIRS AND RAMPS, AND INSIDE HANDRAILS AT SWITCHBACKS			
	HANDRAIL HEIGHT	505.4	TOP AT 34 MIN TO 38 MAX ABOVE STAIR NOSINGS AND RAMP SURFACES			
	HANDRAIL CLEARANCE	505.5	1 1/2 INCH MIN BETWEEN GRIPPING SURFACE AND ADJACENT SURFACE			
	HANDRAIL CROSS SECTION	505.7	CIRCULAR CROSS SECTION DIAMETER 1 1/4 INCH MIN, 2 INCH MAX			
	HANDRAIL EXTENSIONS	505.1	TOP AND BOTTOM OF RAMPS: 12 INCHES; TOP AT STAIRS: 12 INCHES; BOTTOM AT STAIRS: ONE TREAD DEPTH			
	PLUMBING ELEMENTS AND FACILITIES	601	PLUMBING ELEMENTS AND FACILITIES REQUIRED TO BE ACCESSIBLE BY SCOPING PROVISIONS ADOPTED BY THE ADMINISTRATIVE AUTHORITY SHALL COMPLY WITH THE APPLICABLE PROVISIONS OF CHAPTER 6.			
	COMMUNICATION ELEMENTS AND FEATURES	701	COMMUNICATION ELEMENTS AND FEATURES REQUIRED TO BE ACCESSIBLE BY SCOPING PROVISIONS ADOPTED BY THE ADMINISTRATIVE AUTHORITY SHALL COMPLY WITH THE APPLICABLE PROVISIONS OF CHAPTER 7.			

DESIGN BY:										
DRAWN BY:		4	7/3/2023	ISSUED FOR BID						
CHECKED BY:										
APPROVED BY:		0	9/9/2022	ISSUED FOR PERMIT	MN	KH	SD			
CDOT/APPROVED BY:		NO.	DATE	REVISIONS	DES.	DRW.	CHK.	DCCO	CDOT	

TRANSYSTEMS
222 SOUTH RIVERSIDE PLAZA SUITE 610
CHICAGO, ILLINOIS 60606

SKIDMORE, OWINGS & MERRILL LLP
224 SOUTH MICHIGAN AVENUE, SUITE 1000
CHICAGO, ILLINOIS 60604

CHICAGO DEPARTMENT OF TRANSPORTATION
DIVISION OF ENGINEERING

STATE / LAKE LOOP ELEVATED STATION
200 NORTH STATE STREET, CHICAGO, IL 60601

SPEC. NO.

BUILDING CODE MATRIX

DRAWING NO. G-101

CDOT PROJECT D-1-209

DATE: 9/9/2022

REVISION NO.

CITY OF CHICAGO DEPARTMENT OF BUILDINGS
GENERAL BUILDING REQUIREMENTS PER CHICAGO ZONING ORDINANCE AND CHICAGO BUILDING CODE (CBC) 2019 EDITION

Item	Subject	Code Reference	Ordinance Requirement	Actual	N/A
Chicago Zoning Ordinance Requirements					
Z.01	ZONING DISTRICT / PLANNED DEVELOPMENT NO.	ZONING MAP		DX-16, PD 706, PD 980	—
Z.02	EXISTING ZONING USE(S)	17-17-0100			X
Z.03	PROPOSED ZONING USE(S)	17-17-0100			X
Z.04	CHICAGO LANDMARK DESIGNATION	RECORDED DEED RESTRICTION			X
Z.05	LAKEFRONT PROTECTION DISTRICT	ZONING MAP, CH. 16-4			X
Z.06	ZONING OVERLAY DISTRICT	ZONING MAP, CH. 17-7			X
Z.07	PEDESTRIAN STREET	ZONING MAP, 17-3-0500			X
Z.08	LOT AREA	17-17-0302			X
Z.09	FLOOR AREA RATIO (FAR)	VARIES BY DISTRICT			X
Z.10	TOTAL FLOOR AREA	17-17-0305, VARIES BY DISTRICT			X
Z.11	BUILDING HEIGHT	17-17-0311, VARIES BY DISTRICT		15'-8"	
Z.12	FRONT SETBACK	17-17-0306, VARIES BY DISTRICT			X
Z.13	COMBINED SIDE SETBACKS	17-17-0308, VARIES BY DISTRICT			X
Z.14	REAR SETBACK	17-17-0307, VARIES BY DISTRICT			X
Z.15	REAR YARD / ON-SITE OPEN SPACE	17-2-0307, 17-4-0410			X
Z.16	NUMBER OF DWELLING UNITS	VARIES BY DISTRICT			X
	NUMBER OF EFFICIENCY UNITS (INCLUDE ABOVE)	VARIES BY DISTRICT			X
Z.17	NUMBER OF OFF-STREET PARKING SPACES	17-10-0200			X
	EVSE-READY PARKING SPACES (INCLUDE ABOVE)	17-10-1011 (EFF. 11/1/20)			X
Z.18	NUMBER OF OFF-STREET LOADING SPACES	17-10-1100			X
Z.19	LANDSCAPE ORDINANCE COMPLIANCE	CH. 17-11			X
Z.20	TOWNHOUSE DEVELOPMENT STANDARDS	17-2-0500			X
Z.21	PLANNED DEVELOPMENT STANDARDS	CH. 17-8			X
Z.22	OPEN SPACE IMPACT FEE WORKSHEET	CH. 16-18			X
Z.23	AFFORDABLE REQUIREMENTS ORDINANCE (ARO) FORMS	CH. 2-44			X
Z.24	PLAT OF SURVEY	17-13-1302-B			X
2019 Chicago Rehabilitation Code Requirements					
	PROPOSED CLASSIFICATION OF WORK	14R-6		ADDITIONS	
	WORK AREA	14R-601.2		TOTAL WORK AREA = 4,116 SF*	
2019 Chicago Building Code Requirements					
B.03.01	PROPOSED OCCUPANCY CLASSIFICATION(S)	14B-3-302.1	—	ASSEMBLY GROUP A-3 (WAITING AREAS IN TRANSPORTATION TERMINALS)	
B.03.02	EXISTING OCCUPANCY CLASSIFICATION(S)	14R-3-302.6, CH. 14B-3	—	ASSEMBLY GROUP A-3 (WAITING AREAS IN TRANSPORTATION TERMINALS)	
B.04.01	SPECIAL OCCUPANCY CONDITIONS	CH. 14B-4			X
B.05.01	GRADE PLANE	14B-2-203.2	WITH RESPECT TO EACH BUILDING, GRADE PLANE SHALL BE A REFERENCE PLANE REPRESENTING THE AVERAGE FIN-ISHED GROUND LEVEL ADJOINING THE BUILDING AT EXTERIOR WALLS.	14'-7" CCD	
B.05.02	BUILDING HEIGHT IN FEET ABOVE GRADE PLANE	14B-2-203.3, 14B-5-504.3	A3, NON SPRINKLERED, TYPE I-A CONSTRUCTION = 80 FEET MAX	15'-8"	
B.05.03	NUMBER OF STORIES ABOVE GRADE PLANE	14B-2-202, 14B-5-504.4	A3, NON SPRINKLERED, TYPE I-A CONSTRUCTION = UNLIMITED	1 STORY	
B.05.04	MEZZANINE / EQUIPMENT PLATFORM	14B-5-505			X
B.05.05	BUILDING AREA	14B-2-203.4, 14B-5-506	A3, NON SPRINKLERED, TYPE I-A CONSTRUCTION = UNLIMITED	COMPLIES	
B.05.06	NUMBER OF BASEMENTS EXCLUDED FROM AREA	14B-5-506.1.3			X
B.05.07	FRONTAGE INCREASE	14B-5-506.3			X
B.05.08	MIXED OCCUPANCY STRATEGY	14B-5-508			X
B.05.09	ACCESSORY OCCUPANCIES	14B-5-508.2			X
B.05.10	INCIDENTAL USES	14B-5-509			X
B.06.01	CONSTRUCTION CLASSIFICATION	14B-6-602			
	RATING – PRIMARY STRUCTURAL FRAME	TABLE 14B-6-601, 14B-7-704	A3, NON SPRINKLERED, TYPE I-A CONSTRUCTION TYPE = 3 HR	COMPLIES	
	RATING – EXTERIOR BEARING WALLS	TABLES 14B-6-601, 14B-6-602	A3, NON SPRINKLERED, TYPE I-A CONSTRUCTION TYPE = 3 HR	COMPLIES	
	RATING – INTERIOR BEARING WALLS	TABLE 14B-6-601	A3, NON SPRINKLERED, TYPE I-A CONSTRUCTION TYPE = 3 HR	COMPLIES	
	RATING – EXTERIOR NONBEARING WALLS	TABLE 14B-6-602	A3, NON SPRINKLERED, TYPE I-A CONSTRUCTION TYPE = 1 HF	COMPLIES	
	RATING – FLOOR CONSTRUCTION	TABLE 14B-6-601	A3, NON SPRINKLERED, TYPE I-A CONSTRUCTION TYPE = 2 HR	COMPLIES	
	RATING – ROOF CONSTRUCTION	TABLE 14B-6-601	A3, NON SPRINKLERED, TYPE I-A CONSTRUCTION TYPE = 1.5 HR	COMPLIES	
B.06.02	COMBUSTIBLE MATERIAL, TYPE I-IV CONSTRUCTION	14B-6-603, 14B-6-604		NON COMBUSTIBLE	
B.06.03	BASEMENT CONSTRUCTION	14B-6-605			X
B.07.01	EXTERIOR WALL RATING	TABLES 14B-6-601, 14B-6-602	A3, NON SPRINKLERED, TYPE I-A CONSTRUCTION TYPE = 1 HF	COMPLIES	
B.07.02	EXTERIOR WALL PROJECTIONS	14B-7-705.2			X
B.07.03	EXTERIOR WALL OPENINGS	14B-7-705.8			X
B.07.04	EXTERIOR WALL PARAPETS	14B-7-705.11			X
B.07.05	FIRE WALL RATING	14B-7-706.4			X
B.07.06	FIRE WALL OPENINGS	14B-7-706.8, 14B-7-716.1			X
B.07.07	WALL/FLOOR RATING – OCCUPANCY SEPARATION	14B-7-707.3.9, 14B-7-711.2.4.1			X
B.07.08	WALL/FLOOR RATING – FIRE AREA SEPARATION	14B-7-707.3.10, 14B-7-711.2.4.2			X
B.07.09	WALL/FLOOR RATING – CONTROL AREA	14B-4-414.2.4, 14B-7-707.3.8			X
B.07.10	WALL/FLOOR RATING – INCIDENTAL USES	14B-7-707.3.7, 14B-7-711.2.4.5			X
B.07.11	WALL/FLOOR– UNIT SEPARATION	14B-4-420, 14B-7-711.2.4.3			X
B.07.12	WALL/FLOOR – CORRIDOR	14B-7-708, 14B-10-1020.1			X
B.07.13	SMOKE BARRIER	14B-7-709			X
B.07.14	VERTICAL OPENINGS	14B-7-712		EXISTING	
B.07.15	SHAFT ENCLOSURE – RATING	14B-7-713.4	2 HOURS WHERE CONNECTING 4 STORIES OR MORE, AND 1 HOUR WHERE CONNECTING LESS THAN 4 STORIES EXCEPT: WHERE SHAFTS CONTAIN ONLY NONCOMBUSTIBLE PIPES, NONCOMBUSTIBLE CONDUIT OR IRON, STEEL OR ALUMINUM DUCTS REQUIRING FLOOR PENETRATIONS NOT EXCEEDING 9 SQUARE FEET (0.8 M2) PER STORY, THE SHAFT ENCLOSURES CONNECTING ANY NUMBER OF STORIES SHALL HAVE A FIRE-RESISTANCE RATING OF NOT LESS THAN 1 HOUR.	1 HOUR
B.07.16	SHAFT ENCLOSURE – CONTINUITY	14B-7-713.5	SHAFT ENCLOSURES SHALL BE CONSTRUCTED AS FIRE BARRIERS IN ACCORDANCE WITH SECTION 707 OR HORIZONTAL ASSEMBLIES CONSTRUCTED IN ACCORDANCE WITH SECTION 711, OR BOTH, AND SHALL HAVE CONTINUITY IN ACCORDANCE WITH SECTION 707.5 FOR FIRE BARRIERS OR SECTION 711.2.2 FOR HORIZONTAL ASSEMBLIES, AS APPLICABLE.	COMPLIES
B.07.17	SHAFT ENCLOSURE – OPENINGS / PENETRATIONS	14B-7-713.7, 14B-7-713.8	THROUGH PENETRATIONS SHALL BE PROTECTED BY AN APPROVED PENETRATION FIRESTOP SYSTEM INSTALLED AS TESTED IN ACCORDANCE WITH ASTM E814 OR UL 1479, WITH A MINIMUM POSITIVE PRESSURE DIFFERENTIAL OF 0.01 INCH (2.49 PA) OF WATER AND SHALL HAVE AN F RATING OF NOT LESS THAN THE REQUIRED FIRE-RESISTANCE RATING OF THE WALL PENETRATED.	COMPLIES
B.07.18	PENETRATION OF RATED CONSTRUCTION	14B-7-714	PENETRATIONS INTO OR THROUGH FIRE WALLS, FIRE BARRIERS, SMOKE BARRIER WALLS AND FIRE PARTITIONS SHALL COMPLY WITH SECTIONS 714.4.1 THROUGH 714.4.3. PENETRATIONS IN SMOKE BARRIER WALLS SHALL ALSO COMPLY WITH SECTION 714.5.4.	COMPLIES
B.07.19	OPENING PROTECTIVES	14B-7-716	OPENINGS IN FIRE BARRIERS (SHAFTS):	COMPLIES
B.07.20	DUCT AND AIR TRANSFER OPENINGS	14B-7-717	DUCTS THAT PENETRATE FIRE-RESISTANCE-RATED WALLS AND ARE NOT REQUIRED BY THIS SECTION TC HAVE FIRE DAMPERS SHALL COMPLY WITH THE REQUIREMENTS OF SECTIONS 714.3 THROUGH 714.4.3. DUCTS THAT PENETRATE HORIZONTAL ASSEMBLIES NOT REQUIRED TO BE CONTAINED WITHIN A SHAFT AND NOT REQUIRED BY THIS SECTION TO HAVE FIRE DAMP-ERS SHALL COMPLY WITH THE REQUIREMENTS OF SECTIONS 714.5 THROUGH 714.6.2.	COMPLIES
B.07.21	FIREBLOCKING / DRAFTSTOPPING	14B-7-718	DRAFTSTOPPING IN FLOOR/CEILING SPACES AND ATTIC SPACES SHALL COMPLY WITH SECTIONS 718.3 AND 718.4, RESPECTIVELY. THE PERMITTED USE OF COMBUSTIBLE MATERIALS IN CONCEALED SPACES OF BUILDINGS OF TYPE I OR II CONSTRUCTION SHALL BE LIM-ITED TO THE APPLICATIONS INDICATED IN SECTION 718.5. N COMBUSTIBLE CONSTRUCTION, FIREBLOCK-ING SHALL BE INSTALLED TO CUT OFF CONCEALED DRAFT OPENINGS (BOTH VERTICAL AND HORIZONTAL) AND SHALL FORM AN EFFECTIVE BARRIER BETWEEN FLOORS, BETWEEN A TOP STORY AND A ROOF OR ATTIC SPACE. FIREBLOCKING SHALL BE INSTALLED IN THE LOCATIONS SPECIFIED IN SECTIONS 718.2.2 THROUGH 718.2.7.	NON COMBUSTIBLE
B.08.01	INTERIOR FINISH: ROOMS / SPACES	TABLE 14B-8-803.13	CLASS B - FLAME SPREAD INDEX 26-75; SMOKE-DEVELOPED INDEX 0-45(	COMPLIES	
B.08.02	INTERIOR FINISH: CORRIDORS / EXIT ACCESS	TABLE 14B-8-803.13	CLASS A - FLAME SPREAD INDEX 0-25; SMOKE-DEVELOPED INDEX 0-45(	COMPLIES	
B.08.03	INTERIOR FINISH: EXIT / EXIT DISCHARGE	TABLE 14B-8-803.13	CLASS A - FLAME SPREAD INDEX 0-25; SMOKE-DEVELOPED INDEX 0-45(	COMPLIES	
B.08.04	INTERIOR FLOOR FINISH (FIBROUS)	14B-8-803.4.2	INTERIOR FLOOR FINISH AND FLOOR COVERING MATE-RIALS SHALL COMPLY WITH SECTIONS 804.2 THROUGH 804.4.2. EXCEPTION: FLOOR FINISHES AND COVERINGS OF A TRADITIONAL TYPE, SUCH AS WOOD, VINYL, LINOLEUM OR TERRAZZO, AND RESIL-IENT FLOOR COVERING MATERIALS THAT ARE NOT COMPRISED OF FIBERS.	COMPLIES	

CITY OF CHICAGO DEPARTMENT OF BUILDINGS
GENERAL BUILDING REQUIREMENTS PER CHICAGO ZONING ORDINANCE AND CHICAGO BUILDING CODE (CBC) 2019 EDITION

Item	Subject	Code Reference	Ordinance Requirement	Actual	N/A
B.09.02	AUTOMATIC SPRINKLER SYSTEM	14B-9-903.2			X
B.09.03	ALTERNATIVE AUTOMATIC EXTINGUISHING SYSTEM	14B-9-904.2			X
B.09.04	STANDPIPE SYSTEM	14B-9-905.3			X
B.09.05	PORTABLE FIRE EXTINGUISHERS	14B-9-906.1		COMPLIES	
B.09.06	FIRE ALARM SYSTEM	14B-9-907.2		COMPLIES	
B.09.07	SINGLE- AND MULTIPLE-STATION SMOKE ALARMS	14B-9-907.2.10	A MANUAL FIRE ALARM SYSTEM THAT ACTIVATES THE OCCUPANT NOTIFICATION SYSTEM IN ACCORDANCE WITH SECTION 907.5 SHALL BE INSTALLED IN GROUP A OCCUPANCIES WHERE THE OCCUPANT LOAD DUE TO THE ASSEMBLY OCCUPANCY IS 300 OR MORE.	EXISTING	
B.09.08	VISIBLE ALARM NOTIFICATION	14B-9-907.5.2.3	VISIBLE ALARM NOTIFICATION APPLIANCES ARE NOT REQUIRED IN ALTERATIONS, EXCEPT WHERE AN EXISTING FIRE ALARM SYSTEM IS UPGRADED OR REPLACED, OR A NEW FIRE ALARM SYSTEM IS INSTALLED.	EXISTING	
B.09.09	SMOKE CONTROL SYSTEM	14B-9-909			X
B.09.10	SMOKE AND HEAT REMOVAL	14B-9-910.2			X
B.09.11	FIRE DEPARTMENT CONNECTION	14B-9-912.2, 14B-9-912.4			X
B.09.12	FIRE PUMP ROOM RATING	14B-9-913.2.1			X
B.09.13	SIGNAGE FOR SHAFTWAY / EQUIPMENT ROOM	14B-9-914	DOOR OR WINDOW OPENINGS TO A HOISTWAY OR SHAFTWAY FROM THE INTERIOR OF THE BUILDING SHALL BE PLAINLY MARKED WITH THE WORD "SHAFT-WAY" IN RED LETTERS NOT LESS THAN 6 INCHES (152 MM) HIGH ON A WHITE BACKGROUND. SUCH WARNING SIGNS SHALL BE PLACED SO AS TO BE READILY DISCERNIBLE.	COMPLIES	
B.09.14	CARBON MONOXIDE DETECTION	14B-9-915			X
B.09.15	CITY FIRE ALARM BOX	14B-9-919.1			X
B.10.01	OCCUPANT LOAD CALCULATIONS SHOWN	14B-10-1004.1		PER NFPA 130	
B.10.02	EGRESS CAPACITY CALCULATIONS SHOWN	14B-10-1005.1		PER NFPA 130	
B.10.03	COMMON PATH OF EGRESS TRAVEL DISTANCE	TABLE 14B-10-1006.2.1		PER NFPA 130	
B.10.04	SINGLE EXIT CONDITION ALLOWED	14B-10-1006.3.3			X
B.10.05	EXIT AND EXIT ACCESS SEPARATION	14B-10-1007.1	WHERE TWO EXITS, EXIT ACCESS DOORWAYS, EXIT ACCESS STAIRWAYS OR EXIT ACCESS RAMPS, OR ANY COMBINATION THEREOF, ARE REQUIRED FROM ANY PORTION OF THE EXIT ACCESS, THEY SHALL BE PLACED A DISTANCE APART EQUAL TO NOT LESS THAN ONE-HALF OF THE LENGTH OF THE MAXIMUM OVERALL DIAGONAL DIMENSION OF THE BUILD-ING OR AREA TO BE SERVED MEASURED IN A STRAIGHT LINE BETWEEN THEM.	PER NFPA 130	
B.10.06	ACCESSIBLE MEANS OF EGRESS	14B-10-1009	AT LEAST TWO REQUIRED. INCLUDES STAIRS COMPLYING WITH 1009.3 AND ELEVATORS COMPLING WITH SECTION 1009.4	COMPLIES	
B.10.07	TWO-WAY COMMUNICATION	14B-10-1009.8	A TWO-WAY COMMUNICA-TION SYSTEM COMPLYING WITH SECTIONS 1009.8.1 AND 1009.8.2 SHALL BE PROVIDED AT THE LANDING SERVING EACH ELEVATOR OR BANK OF ELEVATORS ON EACH ACCESSIBLE FLOOR THAT IS ONE OR MORE STORIES ABOVE OR BELOW THE LEVEL OF EXIT DISCHARGE.		
B.10.08	ROOF ACCESS	14B-10-1011.12			X
B.10.09	EXIT SIGNS	14B-10-1013	EXITS AND EXIT ACCESS DOORS SHALL BE MARKED BY AN EXIT SIGN READILY VISIBLE FROM ANY DIRECTIOI OF EGRESS TRAVEL.	COMPLIES	
B.10.10	HANDRAIL / GUARD DETAILS	14B-10-1014, 14B-10-1015	HANDRAILS SERVING FLIGHTS OF STAIR-WAYS, RAMPS, STEPPED AISLES AND RAMPED AISLES SHALL BE ADE QUATE IN STRENGTH AND ATTACHMENT IN ACCORDANCE WITH SECTION 1607.8. GUARDS SHALL COMPLY WITH THE PROVISIONS OF SECTIONS 1015.2	COMPLIES	
B.10.11	EXIT ACCESS TRAVEL DISTANCE	14B-10-1017.2		PER NFPA 130	
B.10.12	ASSEMBLY SEATING REQUIREMENTS	14B-10-1029			X
B.12.01	NATURAL VENTILATION	14B-12-1202.1	EVERY SPACE INTENDED FOR HUMAN OCCUPANCY SHALL BE PROVIDED WITH NATURAL VENTILATION IN ACCORDANCE WITH SECTION 1202.5, OR MECHANICAL VENTILATION IN ACCORDANCE WITH THE CHICAGO MECHANICAL CODE.	EXISTING	
B.12.02	NATURAL LIGHT	14B-12-1204.2	EVERY SPACE INTENDED FOR HUMAN OCCUPANCY SHALL BE PROVIDED WITH NATURAL LIGHT IN ACCORDANCE WITH SEC-TION 1204.2 OR SHALL BE PROVIDED WITH ARTIFICIAL LIGHT IN ACCOR-DANCE WITH SECTION 1204.3.	EXISTING	
B.12.03	COURT / YARD MINIMUM DIMENSIONS	14B-12-1205			X
B.12.04	MINIMUM CEILING HEIGHT	14B-12-1207.2	OCCUPIABLE SPACES, HABITABLE SPACES AND CORRIDORS SHALL HAVE A CEILING HEIGHT OF NOT LESS THAN 7 FEET 6 INCHES (2286 MM) ABOVE THE FINISHED FLOOR.	EXISTING / COMPLIES	
B.12.05	MINIMUM ROOM AREA	14B-12-1207.3			X
B.14.01	EXTERIOR WALL COVERINGS – COMBUSTIBILITY	14B-14-1405.1	WHERE PERMITTED BY SECTION 1405.1.1, COMBUSTIBLE EXTERIOR WALL COVERINGS SHALL BE TESTED IN ACCORDANCE WITH NFPA 268.	NON COMBUSTIBLE	
B.15.01	ROOF FIRE CLASSIFICATION	14B-15-1505.1			X
B.15.02	ROOFTOP STRUCTURE HEIGHT	14B-15-1510, 14B-15-1513			X
B.15.03	ROOFTOP STRUCTURE AREA	14B-15-1510.1.1, 14B-15-1513.1.1			X
B.15.04	ROOFTOP STRUCTURE MATERIALS	14B-15-1513.3			X
B.15.05	ROOF COVERING SOLAR REFLECTANCE	14B-15-1515.2	ROOF COVERINGS ON LOW-SLOPED ROOFS SHALL HAVE AN INITIAL REFLECTANCE VALUE OF 0.72 OR A THREE-YEAR-INSTALLED REFLECTANCE VALUE OF 0.5 OR GREATER	COMPLIES	
B.27.01	ELECTRICAL ROOM FIRE RESISTANCE RATING	TABLE 14B-5-509, TITLE 14E			X
B.27.02	ELECTRICAL ROOM NUMBER OF EXITS	14B-10-1006.2.2.7			X
B.28.01	MECHANICAL ROOM FIRE-RESISTANCE RATING	TABLE 14B-5-509			X
B.28.01	MECHANICAL ROOM NUMBER OF EXITS	14B-10-1006.2.2			X
B.30.01	ELEVATOR CABS PER HOISTWAY	14B-30-3002.2	WHERE FOUR OR MORE ELEVATOR CARS SERVE ALL OR THE SAME PORTION OF A BUILD-ING, THE ELEVATORS SHALL BE LOCATED IN NOT FEWER THAN TWO SEPARATE HOISTWAYS.	COMPLIES	
B.30.02	ELEVATOR CAB DIMENSIONS	14B-30-3002.4	THE ELEVATOR CAR SHALL BE OF SUCH A SIZE AND ARRANGEMENT TO ACCOMMODATE AN AMBULANCE STRETCHER 24 INCHES BY 84 INCHES	COMPLIES	
B.30.03	STANDBY POWER FOR ELEVATOR	14B-10-1009.4.1	THE ELEVATOR SHALL MEET THE EMERGENCY OPERATION AND SIGNALING DEVICE REQUIREMENTS OF SECTION 2.27 OF CHAPTER 3 OF THE CHICAGO CONVEYANCE DEVICE CODE. STANDBY POWER SHALL BE PROVIDED IN ACCOR-DANCE WITH CHAPTER 27 AND SECTION 3003.	COMPLIES	
B.30.04	ELEVATOR MACHINE ROOM RATING	14B-30-3005.4	ELEVATOR MACHINE ROOMS, CONTROL ROOMS, CONTROL SPACES AND MACHINERY SPACES OUTSIDE OF BUI ATTACHED TO A HOISTWAY THAT HAVE OPENINGS INTO THE HOISTWAY SHALL BE ENCLOSED WITH FIRE BARRIERS CONSTRUCTED IN ACCORDANCE WITH SECTION 707 OR HORIZONTAL ASSEMBLIES CONSTRUCTED IN ACCOR-DANCE WITH SECTION 711, OR BOTH. THE FIRE-RESISTANCE RATING SHALL BE NOT LESS THAN THE REQUIRED RATING OF THE HOISTWAY ENCLOSURE SERVED BY THE MACHINERY. OPENINGS IN THE FIRE BARRIERS SHALL BE PROTECTED WITH ASSEMBLIES HAVING A FIRE-RESIS-TANCE RATING NOT LESS THAN THAT REQUIRED FOR THE HOISTWAY ENCLOSURE DOORS.	COMPLIES	
B.31.01	FENCE HEIGHT AND MATERIALS	14B-31-3114, (ALSO ZONING REQS.)			X

*NOTE: WORK AREA BOUNDARY SHOWN ON G-108

DESIGN BY:										
DRAWN BY:										
CHECKED BY:										
APPROVED BY:		4	7/3/2023	ISSUED FOR BID	KP	KP	NL			
CDOT/APPROVED BY:		NO.	DATE	REVISIONS	DES.	DRW.	CHK.	DCCO	CDOT	

TranSystems
TRANSYSTEMS
222 SOUTH RIVERSIDE PLAZA SUITE 610
CHICAGO, ILLINOIS 60606

LICENSED ARCHITECT
QUENTIN PETERSEN
001.024068
STATE OF ILLINOIS

CDOT
CHICAGO DEPARTMENT OF TRANSPORTATION
DIVISION OF ENGINEERING

STATE / LAKE LOOP ELEVATED STATION
200 NORTH STATE STREET, CHICAGO, IL 60601

BUILDING CODE MATRIX - SUBWAY

CDOT PROJECT D-1-209 | DATE: 9/9/2022

SPEC. NO.

DRAWING NO.
G-102

REVISION NO.4

CDOT DIVISION OF ENGINEERING
State/Lake Station Replacement
CDOT No. D-1-209

Minutes of Meeting
1st MOPD Pre-permit Meeting – CDOT Meeting 104
Tuesday, July 20, 2021, 01:00 – 02:00 PM
Video Conference Call

ATTENDEES
CDOT Engineering: Julian Silva, Rajiv Pinto
CoC: Matthew Sepanik
TranSystems: Mike Lev, Kelli Pledger
SOM: Sean Doyle, Ian Kaminski-Coughlin
JLK: Terry Sullivan, Jonathan Wlodaver

PROJECT OVERVIEW AND PAGE TURN
Note: Purpose of meeting is to review the State/Lake Elevated Station and State Street Subway Project and discuss accessibility requirements with MOPD.

- SOM delivered a brief project overview describing the proposed design for the State/Lake Elevated Station replacement.
- TranSystems gave an overview of the State Street Subway describing the proposed addition of two elevators to make the Lake/Randolph Station accessible.
- SOM presented the page turn of drawings related to the State/Lake Elevated Station.
- SOM noted that the project will comply with several accessibility codes including: ICC A117.1-2009, 2018 Illinois Accessibility Code, and ADA.
- SOM and TranSystems described the addition of refuge islands in the east/west crosswalks at State Street. MOPD asked if the crossing in the median would be flush with street. TranSystems clarified that essentially yes, but there would be a slight slope for drainage.
- MOPD stated that stairs should be provided with closed risers. SOM noted that this is the current design intent, with exception of a ½" gap for drainage at the back of the treads.
- MOPD asked if stairs will have stair edge detection (at the nosings). TranSystems noted that CTA is working on a standard and testing, and the project will follow their lead if a standard becomes determined.
- SOM requested clarification of the current requirement for bottom of stair handrail extensions. MOPD stated that one tread depth at slope is required; however if the team desires to provide the additional flat extension beyond this would be welcomed but not requisite.
- SOM noted that current clearances at CTA restrooms and adjacent vestibules need refinement to meet accessibility codes.
- MOPD asked if the elevators are sized for a stretcher. SOM and TranSystems confirmed.
- SOM confirmed that there will be two-way communications at the elevators.
- SOM indicated that the backrest for the benches will be modified to meet the requirement that the bottom of the backrest must begin at 2" max above the seat.
- MOPD noted that the backrest top is to be 18" minimum above the seat. SOM will check and modify to comply with this requirement.
- TranSystems presented the page turn of drawings related to the Subway portion of the project, describing the general arrangement of the two new pass-through elevators.
- TranSystems confirmed that the subway escalators are not being modified.
- MOPD commented that the stair revision at the subway should not present any issues if it is designed per code.
- MOPD made a general comment that the team should verify we have no issues with protruding objects, and gave examples such as signage wall-mounted in cases, fire extinguishers, fire department panels, hand sanitizing stations/ towel dispensers, etc.
- MOPD made a general comment that the team should verify that any "standard" details used in the drawings are coordinated with the specifics of the design. Clearly indicate critical dimensions on the drawings.
- MOPD commented that the team should pay attention to thickness of walls at door openings as this can affect the required clearances.
- MOPD made a general comment that the team should check that General Notes are written in reference to current codes.
- SOM confirmed that the elevated station will be closed to customers during the new work.
- MOPD asked if the two sub portions of the project will be going for two permits or one. TranSystems confirmed that the intent is for one combined permit and one construction contract covering the scope of both the elevated and the subway work.

NEXT STEPS
- MOPD noted that when submitting for permit, the minutes of this meeting should be included. Minutes may be included on a plan sheet if desired, and is sometimes helpful for someone looking at the drawings in the field when code interpretations are granted.
- TranSystems to re-transmit the drawing set to MOPD, and SOM to send the CLA presentation shown during the subject meeting.

DESIGN BY:										
DRAWN BY:		4	7/3/2023	ISSUED FOR BID						
CHECKED BY:										
APPROVED BY:		0	9/9/2022	ISSUED FOR PERMIT	MN	KH	SD			
CDOT/APPROVED BY:		NO.	DATE	REVISIONS	DES.	DRW.	CHK.	DCCO	CDOT	

TRANSYSTEMS
222 SOUTH RIVERSIDE PLAZA SUITE 610
CHICAGO, ILLINOIS 60606

SKIDMORE, OWINGS & MERRILL LLP
224 SOUTH MICHIGAN AVENUE, SUITE 1000
CHICAGO, ILLINOIS 60604

CHICAGO DEPARTMENT OF TRANSPORTATION
DIVISION OF ENGINEERING

STATE / LAKE LOOP ELEVATED STATION
200 NORTH STATE STREET, CHICAGO, IL 60601

SPEC. NO.

MOPD MEETING MINUTES

DRAWING NO.
G-103

CDOT PROJECT D-1-209 | DATE: 9/9/2022 | REVISION NO.

STATE AND LAKE ELEVATED STATION

EXITING CALCULATIONS PER NFPA 130-2020 - 8 CAR TRAINS

OCCUPANT LOAD - NORTH PLATFORM (WESTBOUND)					
	Inbound Train Load			Detraining Occupant Load	Platform Occupant Load
Full Train Load (Assume 8 car train at capacity)	100 occupants/car			800	
	Peak Load	Headways	Service Disruption Factor	Entraining Occupant Load	1019
Peak 15 Min. Entraining Load per CTA data	547	5	2	219	

OCCUPANT LOAD - SOUTH PLATFORM (EASTBOUND)					
	Inbound Train Load			Detraining Occupant Load	Platform Occupant Load
Full Train Load (Assume 8 car train at capacity)	100 occupants/car			800	
	Peak Load	Headways	Service Disruption Factor	Entraining Occupant Load	993
Peak 15 Min. Entraining Load per CTA data	483	5	2	193	

EXIT CAPACITY - NORTH PLATFORM					
	Direction	Quantity	Width (in)	Capacity (pim)	Total Capacity (ppm)
Stairs to Safe Area	dn	2	60	1.41	169
				Platform Exit Capacity (PEC)	169
EXIT CAPACITY - NORTH STATIONHOUSE					
Stationhouse Fare Barrier	Direction	Quantity	Width (in)	Capacity (pim)	Total Capacity (ppm)
Turnstiles	n/a	6	n/a	25	150
Rotogates	n/a	0	n/a	25	0
Accessible Fare Gate	n/a	1	36	60	60
Emergency Gate	n/a	0	36	60	0
				Fare Barrier Exit Capacity (FBEC)	210
Fare Barrier to Safe Area					
Stairs to Safe Area	dn	2	60	1.41	169
				Safe Area Exit Capacity (SAEC)	169
TOTAL NORTH PLATFORM EXIT CAPACITY				TOTAL (PEC+SAEC)	338

EXIT CAPACITY - SOUTH PLATFORM					
	Direction	Quantity	Width (in)	Capacity (pim)	Total Capacity (ppm)
Stairs to Safe Area	dn	2	60	1.41	169
				Platform Exit Capacity (PEC)	169
EXIT CAPACITY - SOUTH STATIONHOUSE					
Stationhouse Fare Barrier	Direction	Quantity	Width (in)	Capacity (pim)	Total Capacity (ppm)
Turnstiles	n/a	6	n/a	25	150
Rotogates	n/a	0	n/a	25	0
Accessible Fare Gate	n/a	1	36	60	60
Emergency Gate	n/a	0	36	60	0
				Fare Barrier Exit Capacity (FBEC)	210
Fare Barrier to Safe Area					
Stairs to Safe Area	dn	2	60	1.41	169
				Safe Area Exit Capacity (SAEC)	169
TOTAL NORTH PLATFORM EXIT CAPACITY				TOTAL (PEC+SAEC)	338

WALKING TIME FOR LONGEST EXIT ROUTE					
NORTH PLATFORM WALKING TIMES	Symbol	Length (ft)	fpm		Walking Time (min)
Travel time on Bridge	T1	36	124		0.29
Stair from Bridge to Platform	T2	26.5	48		0.55
Platform to Stair to Street	T3	113.5	124		0.92
Stair to Long Landing	T4	25	48		0.52
Long Landing	T5	35.5	124		0.29
Stair from Long Landing to Street	T6	22.5	48		0.47
				Total Walking Time (T)	3.03
SOUTH PLATFORM WALKING TIMES	Symbol	Length (ft)	fpm		Walking Time (min)
Travel time on Bridge	T1	36	124		0.29
Stair from Bridge to Platform	T2	26.5	48		0.55
Platform to Stair to Street	T3	113.5	124		0.92
Stair to Long Landing	T4	25	48		0.52
Long Landing	T5	35.5	124		0.29
Stair from Long Landing to Street	T6	22.5	48		0.47
				Total Walking Time (T)	3.03

OCCUPANT LOAD - NORTH STATIONHOUSE					
	Platform Occ. Load	Platform Exit Flow Time	Stairs to Safety Capacity	Stairs To Safety Occ. Load	Stationhouse Occ. Load
	1019	3.01	169	509	
					509

OCCUPANT LOAD - SOUTH STATIONHOUSE					
	Platform Occ. Load	Platform Exit Flow Time	Stairs to Safety Capacity	Stairs To Safety Occ. Load	Stationhouse Occ. Load
	993	2.93	169	497	
					497

TIMED EXIT CALCULATIONS - NORTH PLATFORM					
	Symbol	Platform Occupant Load	Total Platform Exit Capacity		Platform Exit Flow Time
Platform Exit Flow Time	W1	1019	338		3.01
					Exit Flow Time < 4 minutes
	Symbol	Platform Exit Flow Time	Travel Time on Platform	Waiting Time on Platform	
Waiting Time at Platform Exits	Wp	3.01	0.92	2.10	

TIMED EXIT CALCULATIONS - SOUTH PLATFORM					
	Symbol	Platform Occupant Load	Total Platform Exit Capacity		Platform Exit Flow Time
Platform Exit Flow Time	W1	993	338		2.93
					Exit Flow Time < 4 minutes
	Symbol	Platform Exit Flow Time	Travel Time on Platform	Waiting Time on Platform	
Waiting Time at Platform Exits	Wp	2.93	0.92	2.02	

TIMED EXIT CALCULATIONS - NORTH STATIONHOUSE					
	Symbol	Stationhouse Occ. Load	Fare Barrier Exit Cap.		Fare Barrier Exit Flow Time
Flow Time at Fare Barrier	Ffb	509	210		2.43
	Symbol	Fare Barrier Exit Flow Time	Platform Exit Flow Time		Waiting Time at Fare Barrier
Waiting Time at Fare Barrier	Wtb	2.43	3.01		0.00
	Symbol	Stationhouse Occ. Load	Stationhouse Exit Capacity		Stationhouse Exit Flow Time
Flow Time at Stationhouse Exits	Fs	509	n/a		0.00
	Symbol	Stationhouse Exit Flow Time	Platform Exit Flow Time	Fare Barrier Exit Flow Time	Waiting Time at Station Exits
Waiting Time at Stationhouse Exits	Ws	0.00	3.01	2.43	0.00

TIMED EXIT CALCULATIONS - SOUTH STATIONHOUSE					
	Symbol	Stationhouse Occ. Load	Fare Barrier Exit Cap.		Fare Barrier Exit Flow Time
Flow Time at Fare Barrier	Ffb	497	210		2.36
	Symbol	Fare Barrier Exit Flow Time	Platform Exit Flow Time		Waiting Time at Fare Barrier
Waiting Time at Fare Barrier	Wtb	2.36	2.93		0.00
	Symbol	Stationhouse Occ. Load	Stationhouse Exit Capacity		Stationhouse Exit Flow Time
Flow Time at Stationhouse Exits	Fs	497	n/a		0.00
	Symbol	Stationhouse Exit Flow Time	Platform Exit Flow Time	Fare Barrier Exit Flow Time	Waiting Time at Station Exits
Waiting Time at Stationhouse Exits	Ws	0.00	2.93	2.36	0.00

TOTAL EXIT TIME (PLATFORM TO SAFE AREA)					
NORTH PLATFORM	Total Walk Time (T)	Waiting Time on Platform	Waiting Time at Fare Barrier	Waiting Time at Station Exits	Total Exit Time
Total Exit Time (Platform to Safe Area)	3.03	2.10	0.00	0.00	5.13
					Total Exit Time < 6 minutes
SOUTH PLATFORM	Total Walk Time (T)	Waiting Time on Platform	Waiting Time at Fare Barrier	Waiting Time at Station Exits	Total Exit Time
Total Exit Time (Platform to Safe Area)	3.03	2.02	0.00	0.00	5.05
					Total Exit Time < 6 minutes

DESIGN BY:										
DRAWN BY:		4	7/3/2023	ISSUED FOR BID						
CHECKED BY:										
APPROVED BY:		0	9/9/2022	ISSUED FOR PERMIT	MN	KH	SD			
CDOT/APPROVED BY:		NO.	DATE	REVISIONS	DES.	DRW.	CHK.	DCCO	CDOT	

TRANSYSTEMS
222 SOUTH RIVERSIDE PLAZA SUITE 610
CHICAGO, ILLINOIS 60606

SKIDMORE, OWINGS & MERRILL LLP
224 SOUTH MICHIGAN AVENUE, SUITE 1000
CHICAGO, ILLINOIS 60604

CHICAGO DEPARTMENT OF TRANSPORTATION
DIVISION OF ENGINEERING

STATE / LAKE LOOP ELEVATED STATION
200 NORTH STATE STREET, CHICAGO, IL 60601

SPEC. NO.

NFPA-130 CALCULATIONS

DRAWING NO.
G-104

CDOT PROJECT D-1-209

DATE: 9/9/2022

REVISION NO.

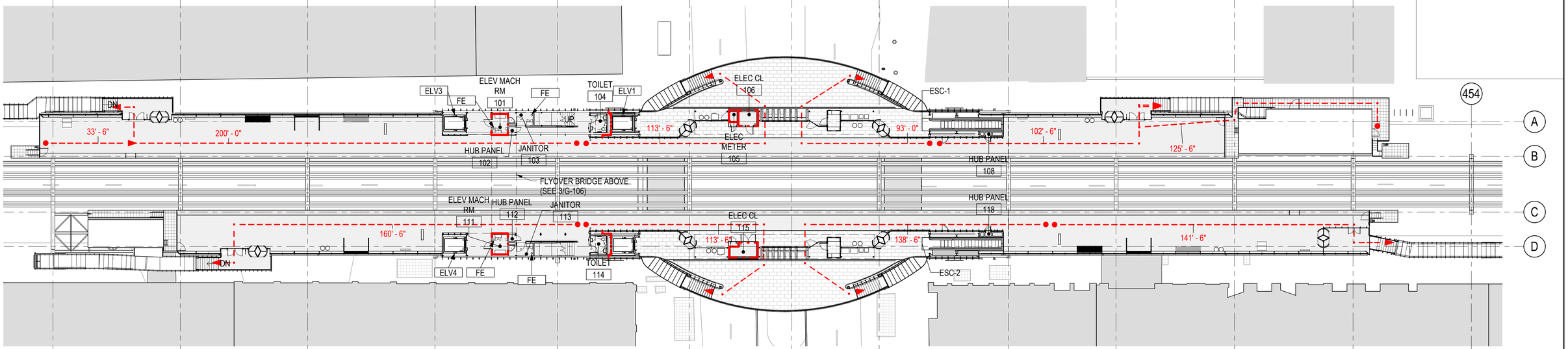

1 PLATFORM LEVEL

1" = 20'-0"

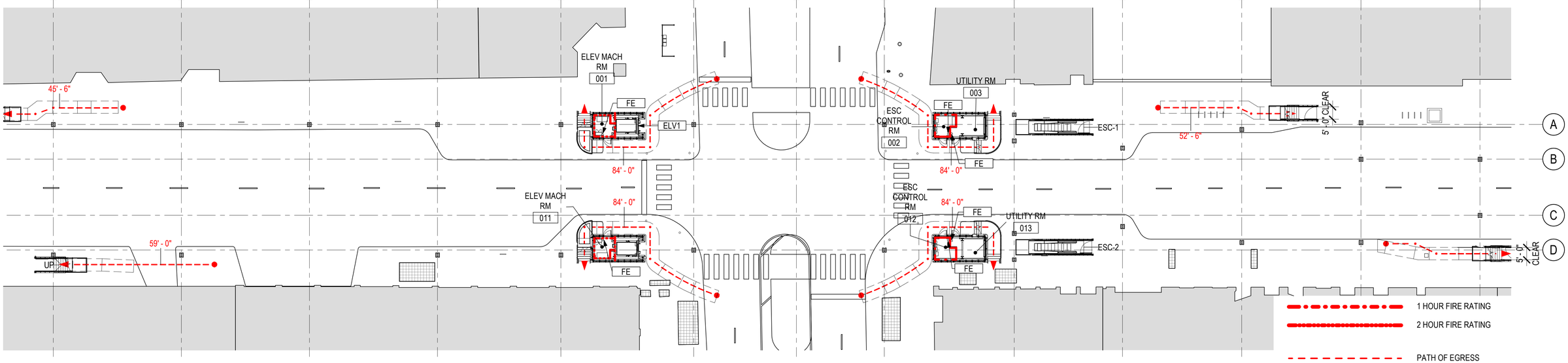

2 STREET LEVEL

1" = 20'-0"

REFER TO SHEET G-106 FOR ROOM FIRE RATING SCHEDULE AND FIRE & LIFE SAFETY PLAN NOTES

DESIGN BY:									
DRAWN BY:		4	7/3/2023	ISSUED FOR BID					
CHECKED BY:									
APPROVED BY:		0	9/9/2022	ISSUED FOR PERMIT	MN	KH	SD		
CDOT/APPROVED BY:		NO.	DATE	REVISIONS	DES.	DRW.	CHK.	DCCO	CDOT

TRANSYSTEMS
222 SOUTH RIVERSIDE PLAZA SUITE 610
CHICAGO, ILLINOIS 60606

SKIDMORE, OWINGS & MERRILL LLP
224 SOUTH MICHIGAN AVENUE, SUITE 1000
CHICAGO, ILLINOIS 60604

CHICAGO DEPARTMENT OF TRANSPORTATION
DIVISION OF ENGINEERING

STATE / LAKE LOOP ELEVATED STATION
200 NORTH STATE STREET, CHICAGO, IL 60601

SPEC. NO.

FIRE & LIFE SAFETY PLANS

DRAWING NO. G-105

CDOT PROJECT D-1-209 | DATE: 9/9/2022 | REVISION NO.

ACAR APPROVAL

CITY OF CHICAGO
DEPARTMENT OF BUILDINGS
Alternative Code Approval Request

USE BLACK INK. DO NOT WRITE IN SHADED AREAS.	Request Number: RF HH	Fee: 150	Date: 6/7/2022

1. Contact Information

Contact name: Lucas Tryggestad — Contact phone: 312.451.4648
E-mail decision to: lucas.tryggestad@som.com

2. Project Information

Address: 200 North State Street
Construction Type: Type I-B — No. Stories: 2
Scope: ☐new construction ☒renovation ☐addition ☐no work
Timing of Request:
☒before construction — $150 review fee
☐after construction w/o permit or conditional permit — $300 review fee
☐existing non-conforming (10 years) — $150 review fee
Open Violations cited by Department: ☐yes ☒no
Permit/Application No. (if applicable):

Occupancy Classification (check all that apply):
☐A-1: single family residential — ☐F: mercantile
☐A-2: all other residential — ☐G-1: industrial low hazard
☐B: institutional — ☐G-2: industrial mod. hazard
☐C-1: large assembly — ☐H-1: storage low hazard
☐C-2: small assembly — ☐H-2: storage mod. hazard
☐C-3: schools ☒Assembly Group A-3 — ☐H-3: garages
☐D: open air assembly — ☐I: hazardous
☐E: business — ☐J: miscellaneous

3. Subject(s) of Request

☐administrative provisions	☐occupancy classification	☐occupancy separation	☐height and area
☐fire resistive materials	☐fire protection systems	☒means of egress / guests	☐accessibility
☐natural light and ventilation	☐structural requirements	☐building materials	☐electrical
☐HVAC / mechanical	☐plumbing systems / materials	☐plumbing fixture count	☐elevators / conveyance devices
☐tents and temporary structures	☐construction site operations	☐cranes and hoists	

4. Specific Request

Applicable code section(s): (CBC 2019: 1004, 1005, 1007.1, 1017.2, 1020)

Narrative Request: This ACAR submission is a resubmission of the ACAR approved on 2/14/22, see exhibit C, and is resubmitted as a result of CTA's request to plan the new subway elevator 18' south of proposed location due to pedestrian circulation concerns. The ACAR resubmission is for the same request of following NFPA 130 in lieu of CBC 2019 as detailed below and extending the max dead-end corridor in the subway mezzanine, but in the resubmission, the distance is 102' in lieu of the 84' feet on the previously submitted ACAR as shown in Exhibit B.

Refer to attached drawings in Exhibit A for reference to the following numbered items:
1. Follow NFPA 130 Occupant Load (NFPA 130 5.3.2) in lieu of CBC 2019 for Occupant Load Calculations (CBC 1004).
2. Follow NFPA 130 Egress Capacity Calculations (NFPA 130 5.3.3) in lieu of CBC 2019 for (CBC 1005).
3. Follow max travel distances 325' (100 meters) (NFPA 130 5.3.3.4) in lieu of CBC 2019 assembly occupancy max travel distance of 250' (CBC 1017.2).
4. 102' max dead-end corridor at Lake Station where proposed elevator in lieu of CBC 2019 assembly occupancy max dead-end corridor of 20' (CBC 1020).
NOTE: Items 1,2 and 3 are applicable to the elevated loop station. Items 1,2,3 and 4 are applicable to the subway station

Exhibit B shows the elevator referenced in item 4 above, at the original ACAR location and the revision to this ACAR location.

Exhibit C, as noted above, is the original ACAR approved on 2/14/22 which we are requesting to be voided and replaced with this ACAR.

Form continues on next page. ➔

Outcome (Department Use Only)

Reviewed by: Robert Fahlstrom — Date: 08/22/2022 — Signature: Robert Fahlstrom
Recommendation: ☒approve ☐deny ☐refer to S&T
Decision by: Hal Hutchinson — Date: 8/23/22 — Signature: Hal Hutchinson
Recommendation: ☒approve ☐deny ☐refer to S&T
Comments: For ITEM #4 (102'-0") Common path of Travel and Dead End Corridor length requires that EM lighting, EM exit, directional signs and diagrams be provided for the 102'-0" corridor. No combustible finishes are allowed.

5. Basis for Request

a) Is this a type of request required by the department or Chicago Building Code? ☒yes ☐no
If yes, please explain. For required requests, please attach the appropriate form(s).
Required because CBC does not incorporate NFPA 130. This will affect occupant load calculations, and the means of egress travel distances.

b) Are there specific individual reasons that make strict application of the Chicago Building Code impractical? ☒yes ☐no
If yes, please explain.
The specific condition on the elevated station which exceeds 200' total travel distance (CBC 1017.2) is the distance from the middle of the flyover bridge to the stair leaving the north west platform end, or to the stair leaving the south west platform end. The additional stairs which would be required under CBC 2019 face significant site constraints and do not add to the life safety of the station per the current NFPA 130.

c) Is the requested approval in compliance with the intent and purpose of the Chicago Building Code? ☒yes ☐no
If yes, please explain.
NFPA 130 is the national standard for transportation facilities and is a more applicable life safety standard than CBC 2019 in this situation.

d) Will approval of this request provide equivalent or greater health protection, accessibility, life and fire safety, and structural performance? ☒yes ☐no
Please explain.
The request will result in equivalent life safety threshold.

e) Are you requesting approval of an alternative material, design, or method of construction that will perform equal to or better than one allowed by code? ☐yes ☒no
If yes, please explain. As applicable, identify relevant testing/certification standards, model codes, or previously approved locations.
Not applicable

6. Preparer Information

Name: Lucas Tryggestad — License number: 001019140
Address: 224 South Michigan Ave. Chicago IL 60604
E-mail: lucas.tryggestad@som.com — Phone: 312.451.4648
Status: ☒Illinois-licensed architect ☐Illinois-licensed structural engineer ☐Illinois-licensed professional engineer ☐supervising electrician ☐plumber ☐supervising elevator mechanic ☐general contractor ☐property owner / manager
If no seal, explain eligibility:
Seal (if applicable): LICENSED ARCHITECT LUCAS E. TRYGGESTAD 001-019140 STATE OF ILLINOIS Exp: 11/30/2022

Instructions

1) Complete this form in accordance with the Rules for the Alternative Code Approval Process, available at *www.cityofchicago.org/buildings*.
2) Pay the applicable review fee, using the attached payment form, at any City of Chicago Department of Finance payment location.
3) Submit the completed request and payment receipt at the front desk on the 9th Floor at City Hall, or by e-mail to allcodeapproval@cityofchicago.org.
4) Allow at least 10 business days for review of your request. Any questions from the Department will be directed to the contact listed in part 1.
5) The Department's decision will be sent to the e-mail address(es) listed in part 1.
6) For pre-permit approvals, a copy of page 1, signed by department officials, must be included in the permit drawings. For post-permit approvals, a additional permit must be obtained to revise the original permit in accordance with the scope of approval; a copy of the signed approval must be included with the permit application. For approvals related to existing conditions, a copy of page 1 must be retained by the property owner.

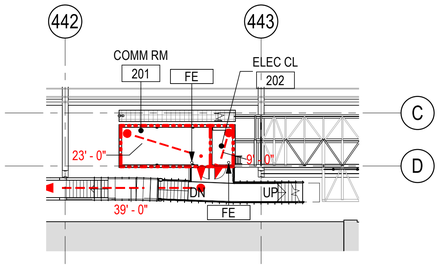

1 MEZZANINE LEVEL - COMM RM
1" = 20'-0"

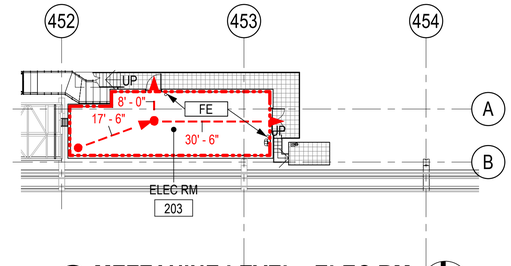

2 MEZZANINE LEVEL - ELEC RM
1" = 20'-0"

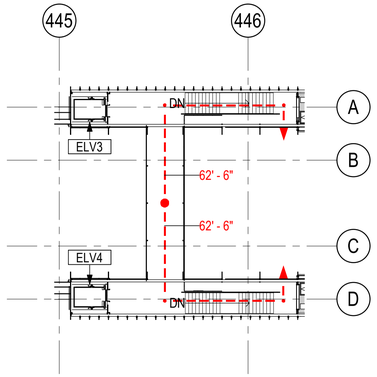

3 FLYOVER LEVEL
1" = 20'-0"

ROOM FIRE RATING SCHEDULE		
ROOM NO.	ROOM NAME	FIRE RATING
SIDEWALK LEVEL		
001	ELEV MACH RM	2 HR
002	ESC CONTROL RM	1 HR
003	UTILITY RM	NR
011	ELEV MACH RM	2 HR
012	ESC CONTROL RM	1 HR
013	UTILITY RM	NR
MEZZANINE LEVEL		
201	COMM RM	2 HR
202	ELEC CL	2 HR
203	ELEC RM	2 HR
PLATFORM LEVEL		
101	ELEV MACH RM	1 HR
102	HUB PANEL	NR
103	JANITOR	NR
104	TOILET	NR
105	ELEC METER	1 HR
106	ELEC CL	1 HR
107	CAK	NR
108	HUB PANEL	NR
109	HUB PANEL	NR
111	ELEV MACH RM	1 HR
112	HUB PANEL	NR
113	JANITOR	NR
114	TOILET	NR
115	ELEC CL	1 HR
117	CAK	NR
118	HUB PANEL	NR
119	HUB PANEL	NR

FIRE & LIFE SAFETY PLAN NOTES:

1. NR INDICATES NON FIRE RATED ROOMS.
2. ELEVATOR MACHINE ROOMS 2 HR. REMOTE ELEVATOR MACHINE ROOMS 1 HR PER 2019 CBC SECTION 3005.3, EXCEPTION 1.
3. ELEVATOR HOISTWAYS 2 HR; ELEVATOR HOISTWAYS AS EXTERIOR WALLS NR PER 2019 CBC SECTIONS 713.6, 705.5, & TABLE 602.
4. COMM ROOM 2 HR PER 2019 CBC TABLE 509.
5. MAIN ELEC ROOMS 2 HR PER CHICAGO ELECTRICAL CODE SECTION 408.11(C).
6. ELEC CLOSETS 1 HR PER CHICAGO ELECTRICAL CODE SECTION 110.26(G).
7. REFER TO THE DOOR SCHEDULE ON A-601 FOR FIRE RATINGS OF DOORS.
8. REFER TO A-602 FOR PARTITION TYPES.
9. REFER TO G-104 FOR NFPA-130 OCCUPANT LOAD, EGRESS CAPACITY AND TIMED EGRESS CALCULATIONS.
10. FOR THE PURPOSE OF SIZING THE PLATFORM EMERGENCY EGRESS CAPACITY, THE FOLLOWING WILL BE USED:
    A. NFPA 130 SECTION 5.3.3 THE NORTH PLATFORM IS DESIGNED BASED ON AN OCCUPANT LOAD OF 1,019 OCCUPANTS. THE SOUTH PLATFORM IS DESIGNED BASED ON AN OCCUPANT LOAD OF 993 OCCUPANTS.
    B. NFPA 130 SECTION 5.3.2 EGRESS CAPACITY CALCULATIONS FOR EGRESS WIDTH OF STAIRS, DOORS AND GATES.
    C. NFPA 130 SECTION 5.3.3.4 MAXIMUM TRAVEL DISTANCE SHALL BE NO LONGER THAN 325 FT

1 HOUR FIRE RATING
2 HOUR FIRE RATING
PATH OF EGRESS
START POINT OF TRAVEL DISTANCE
FE — BRACKET MOUNTED FIRE EXTINGUISHER

DESIGN BY:										
DRAWN BY:		4	7/3/2023	ISSUED FOR BID						
CHECKED BY:		1	11/4/2022	ISSUED FOR PERMIT REVISION 1						
APPROVED BY:		0	9/9/2022	ISSUED FOR PERMIT	MN	KH	SD			
CDOT/APPROVED BY:		NO.	DATE	REVISIONS	DES.	DRW.	CHK.	DCCO	CDOT	

TRANSYSTEMS
222 SOUTH RIVERSIDE PLAZA SUITE 610
CHICAGO, ILLINOIS 60606

SKIDMORE, OWINGS & MERRILL LLP
224 SOUTH MICHIGAN AVENUE, SUITE 1000
CHICAGO, ILLINOIS 60604

CHICAGO DEPARTMENT OF TRANSPORTATION
DIVISION OF ENGINEERING

STATE / LAKE LOOP ELEVATED STATION
200 NORTH STATE STREET, CHICAGO, IL 60601

SPEC. NO.

FIRE & LIFE SAFETY PLANS

DRAWING NO. G-106

CDOT PROJECT D-1-209 | DATE: 9/9/2022 | REVISION NO.1

LAKE SUBWAY STATION **EXITING CALCULATIONS PER NFPA 130-2020 - 8 CAR TRAINS**

CENTER PLATFORM OCCUPANT LOAD CALCULATION					
	Inbound Train Load			Detraining Occupant Load	Platform Occupant Load
Peak direction load (8 car train) per ridership CTA data	50 occupants/car			400	996
Non peak direction load (8 car train) per CTA ridership data	46 occupants/car			368	
	Peak Load	Headways	Service Disruption Factor	Entraining Occupant Load	
Peak 15 Min. Entraining Load per CTA ridership data	570	5	2	228	

PLATFORM EXIT CAPACITIES					
Center Platform	Direction	Quantity	Width (in)	Capacity (pim)	Total Capacity (ppm)
Stair to Stationhouse (Lake)	up	1	48	1.41	67.68
Stair to Stationhouse (Lake)	up	1	88	1.41	124.08
Stairs to Safe Area		0	0	1.41	0
Stair to Stationhouse (Washington)	up	2	53	1.41	149.46
Escalator (assume one out of service)	up	2	40	1.41	112.8
				Platform Exit Capacity (PEC)	454.02

EXIT CAPACITY - LAKE STATIONHOUSE					
EGRESS ELEMENT - EXIT CAPACITIES	Direction	Quantity	Width (in)	Capacity (pim)	Total Capacity (ppm)
Lake Stationhouse Fare Barrier					
Turnstiles	n/a	9	n/a	25	225
Rotogates	n/a	1	n/a	25	25
Accessible Fare Gate	n/a	1	36	60	60
Emergency Gate	n/a	1	36	60	60
				Fare Barrier Exit Capacity (FBEC)	370
Lake Fare Barrier to Safe Area (unpaid area to exterior)					
Stairs to Safe Area	up	2	67	1.41	188.94
Escalator (assume one out of service)	up	1	40	1.41	56.4
				Safe Area Exit Capacity (SAEC)	245.34
				TOTAL (PEC+SAEC)	615.34

WALKING TIME FOR LONGEST EXIT ROUTE	Symbol	Length (ft)	fpm		Walking Time (min)
Travel Time on Platform to Stair	T1	161.5	124		1.30
Platform to Stationhouse (stair)	T2	42.5	48		0.89
Travel Time Stationhouse to Intermediate Stair	T3	70	124		0.56
Intermediate stair	T4	10	48		0.21
Travel time on corridor	T5	69.5	124		0.56
Stair to Street	T6	20	48		0.42
				Total Walking Time (T)	3.94

EXIT CAPACITY - WASHINGTON STATIONHOUSE					
EGRESS ELEMENT - EXIT CAPACITIES	Direction	Quantity	Width (in)	Capacity (pim)	Total Capacity (ppm)
Washington Stationhouse Fare Barrier					
Turnstiles	n/a	15	n/a	25	375
Rotogates	n/a	4	n/a	25	100
Accessible Fare Gate	n/a	2	36	60	120
Emergency Gate	n/a	1	36	60	60
				Fare Barrier Exit Capacity (FBEC)	655
Fare Barrier to Safe Area (unpaid area to exterior)					
Stairs to Safe Area	up	2	68	1.41	191.76
Escalator (assume one out of service)	up	1	40	1.41	56.4
Exit to Pedway		1	144	2.08	299.52
Exit to Block 37		1	144	2.08	299.52
				Safe Area Exit Capacity (SAEC)	847.2
				TOTAL (PEC+SAEC)	1502.2

WALKING TIME FOR LONGEST EXIT ROUTE	Symbol	Length (ft)	fpm		Walking Time (min)
Travel Time on Platform to Stair	T1	161.5	124		1.30
Platform to Stationhouse (stair)	T2	42.5	48		0.89
Travel Time Stationhouse to Stair	T3	65.5	124		0.53
Stair to Street	T4	31.5	48		0.66
				Total Walking Time (T)	3.37

OCCUPANT LOAD - LAKE STATIONHOUSE					
	Platform Occ. Load	Platform Exit Flow Time	Washington Exit Capacity	Lake Occ. Load	Stationhouse Occ. Load
	996	2.19	262.26	575	421
OCCUPANT LOAD - WASHINGTON STATIONHOUSE					
	Platform Occ. Load	Platform Exit Flow Time	Lake Exit Capacity	Washington Occ. Load	Stationhouse Occ. Load
	996	2.19	192	421	575

TEST NO. 1 - TIMED EXIT CALCULATIONS - CENTER PLATFORM					
Element	Symbol	Platform Occ. Load (POC)	Platform Exit Capacity (PEC)		Platform Exit Flow Time
Platform Exit Flow Time	W1	996	454.02		2.19
					Exit Flow Time < 4 minutes
Waiting Time at Platform Exits	Symbol	Exit Flow Time	Travel Time (T1)		Waiting Times (Wp)
	Wp	2.19	1.30		0.89

TEST NO. 2 TIMED EXIT CALCULATIONS - LAKE STATIONHOUSE					
	Symbol	Stationhouse Occ. Load	Fare Barrier Exit Capacity		Fare Barrier Exit Flow Time
Flow Time @ Fare Barrier	Ffb	421	370		1.14
(Station Occupant Load / FBEC)					
	Symbol	Fare Barrier Exit Flow Time	Platform Exit Flow Time		Waiting time at Fare Barrier
Waiting Time @ Fare Barrier	Wfb	1.14	2.19		0.00
Waiting Time (minutes) at Fare Barrier(Wfb = Ffb - Fp)					
	Symbol	Stationhouse Occupancy Load	Stationhouse Exit Capacity		Stationhouse Exit Flow Time
Flow Time @ Stationhouse Exits	Fs	421	245.34		1.71
(Stationhouse Occupant Load / SAEC)					
	Symbol	Stationhouse Exit Flow Time	Platform Exit Flow Time	Fare Barrier Exit Flow Time	Waiting Time at Station Exits
Waiting Time @ Stationhouse Exits		Fs	Fpi	Ffb	(Ws)
Waiting Time @ Stationhouse Exits ((Fs - max (Ffb or Fp))	Ws	1.71	2.19	1.14	0.00
			max (Ffb or Fp) =	2.19	

TOTAL EXIT TIME (PLATFORM TO SAFE AREA)					
	Total Walk Time (T)	Platform Wait Time (Wp)	Fair Barrier Wait Time (Wfb)	Station House Exit Wait Time (Ws)	Total Exit Time Req. < 6 min
Total Exit Time	3.94	0.89	0.00	0.00	4.83
					Total Exit Time < 6 minutes

TEST NO. 2 TIMED EXIT CALCULATIONS - WASHINTGON STATIONHOUSE					
	Symbol	Stationhouse Occ. Load	Fare Barrier Exit Capacity		Fare Barrier Exit Flow Time
Flow Time @ Fare Barrier	Ffb	575	655		0.88
(Station Occupant Load / FBEC)					
	Symbol	Fare Barrier Exit Flow Time	Platform Exit Flow Time		Waiting time at Fare Barrier
Waiting Time @ Fare Barrier	Wfb	0.88	2.19		0.00
Waiting Time (minutes) at Fare Barrier(Wfb = Ffb - Fp)					
	Symbol	Stationhouse Occupancy Load	Stationhouse Exit Capacity		Stationhouse Exit Flow Time
Flow Time @ Stationhouse Exits	Fs	575	847.2		0.68
(Stationhouse Occupant Load / SAEC)					
	Symbol	Stationhouse Exit Flow Time	Platform Exit Flow Time	Fare Barrier Exit Flow Time	Waiting Time at Station Exits
Waiting Time @ Stationhouse Exits		Fs	Fpi	Ffb	(Ws)
Waiting Time @ Stationhouse Exits ((Fs - max (Ffb or Fp))	Ws	0.68	2.19	0.88	0.00
			max (Ffb or Fp) =	2.19	

TOTAL EXIT TIME (PLATFORM TO SAFE AREA)					
	Total Walk Time (T)	Platform Wait Time (Wp)	Fair Barrier Wait Time (Wfb)	Station House Exit Wait Time (Ws)	Total Exit Time Req. < 6 min
Total Exit Time	3.37	0.89	0.00	0.00	4.26
					Total Exit Time < 6 minutes

NO.	DATE	REVISIONS	DES.	DRW.	CHK.	DCCO	CDOT
4	7/3/2023	ISSUED FOR BID	KP	KP	NL		

DESIGN BY:
DRAWN BY:
CHECKED BY:
APPROVED BY:
CDOT/APPROVED BY:

TRANSYSTEMS
222 SOUTH RIVERSIDE PLAZA SUITE 610
CHICAGO, ILLINOIS 60606

LICENSED ARCHITECT QUENTIN PETERSEN 001.024088 STATE OF ILLINOIS

CHICAGO DEPARTMENT OF TRANSPORTATION
DIVISION OF ENGINEERING

STATE / LAKE LOOP ELEVATED STATION
200 NORTH STATE STREET, CHICAGO, IL 60601

SUBWAY NFPA-130 CALCULATIONS

SPEC. NO.

DRAWING NO. G-107

CDOT PROJECT D-1-209

DATE: 9/9/2022

REVISION NO.4

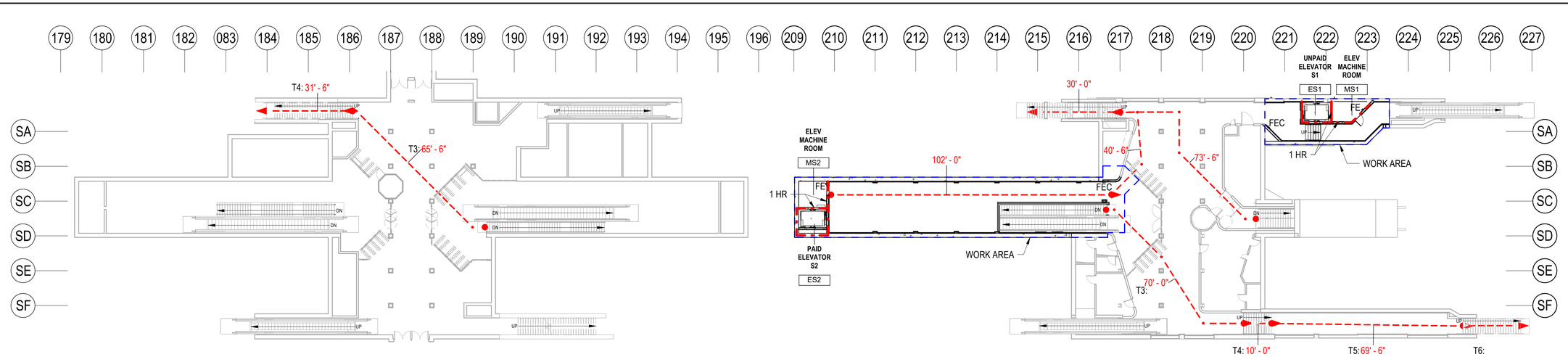

1 WASHINGTON STATIONHOUSE EGRESS PLAN
1" = 20'-0"

2 LAKE STATIONHOUSE EGRESS PLAN
1" = 20'-0"

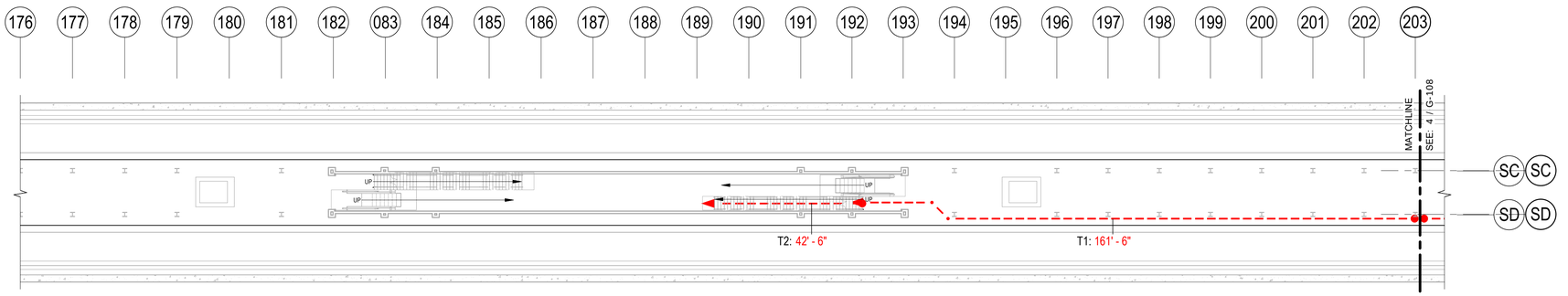

3 SUBWAY PLATFORM EGRESS PLAN
1" = 20'-0"

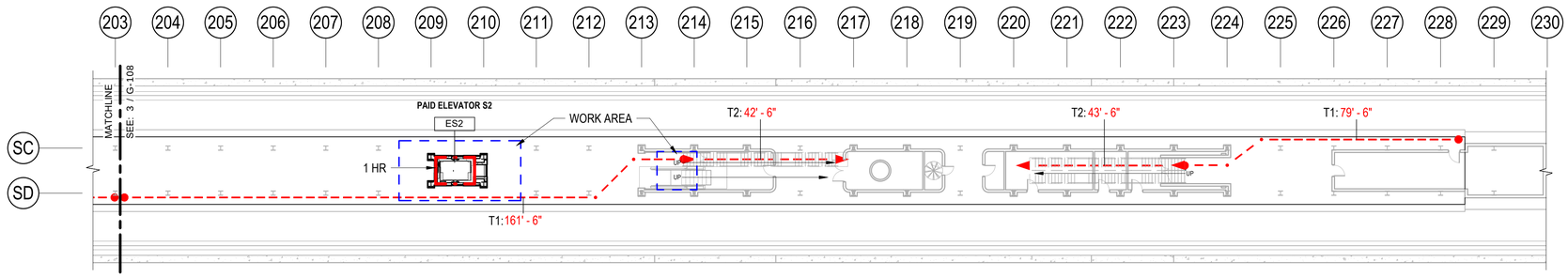

- WORK AREA (PER CHICAGO REHABILITATION CODE)
- 1 HOUR FIRE RATING
- 2 HOUR FIRE RATING
- PATH OF EGRESS
- START POINT OF TRAVEL DISTANCE
- FEC FIRE EXTINGUISHER CABINET
- FE BRACKET MOUNTED FIRE EXTINGUISHER

4 SUBWAY PLATFORM EGRESS PLAN
1" = 20'-0"

DESIGN BY:										
DRAWN BY:										
CHECKED BY:										
APPROVED BY:		4	7/3/2023	ISSUED FOR BID	KP	KP	NL			
CDOT/APPROVED BY:		NO.	DATE	REVISIONS	DES.	DRW.	CHK.	DCCO	CDOT	

TRANSYSTEMS
222 SOUTH RIVERSIDE PLAZA SUITE 610
CHICAGO, ILLINOIS 60606

LICENSED ARCHITECT
QUENTIN PETERSEN
001.024068
STATE OF ILLINOIS

CHICAGO DEPARTMENT OF TRANSPORTATION
DIVISION OF ENGINEERING

STATE / LAKE LOOP ELEVATED STATION
200 NORTH STATE STREET, CHICAGO, IL 60601

SUBWAY FIRE & LIFE SAFETY PLANS

CDOT PROJECT D-1-209

DATE: 9/9/2022

SPEC. NO.

DRAWING NO. G-108

REVISION NO.4

CONSTRUCTION SEQUENCING AND PHASING NOTES

CONSTRUCTION PHASING AND OPERATIONS

1. PHASING INFORMATION IS PROVIDED FOR GUIDANCE ONLY. THE CONTRACTOR SHALL DEVELOP AND SUBMIT FOR APPROVAL A DETAILED CONSTRUCTION PHASING PLAN WHICH COMPLIES WITH ALL OPERATIONAL RESTRICTIONS LISTED IN THE CONTRACT DOCUMENTS. THE CONSTRUCTION SEQUENCES SHOWN/NOTED ARE SUGGESTED SEQUENCES. IT IS NOT THE INTENT OF THE PHASING PROGRAM TO IDENTIFY EVERY DETAIL OF WORK OR DEFINE THE MEANS, METHOD, AND MATERIALS INVOLVED IN THE PHASING, EXCEPT AS MAY BE REQUIRED BY THE COMMISSIONER OR OTHER AGENCIES HAVING JURISDICTION. IT IS SOLELY THE CONTRACTOR'S RESPONSIBILITY TO COORDINATE THE VARIOUS PHASES TO ASSUME THE EFFICIENT, TIMELY, AND SAFE PROGRESSION OF THE WORK.

2. MOVING UTILITIES WILL BE THE RESPONSIBILITY OF THE UTILITY OWNERS EXCEPT AS NOTED ON THE PLANS, IN THE GENERAL NOTES, AND IN THE SPECIFICATIONS. THE CONTRACTOR WILL BE RESPONSIBLE FOR COORDINATING ANY UTILITY RELOCATION(S). THE CONTRACTOR SHALL NOTIFY UTILITY COMPANIES IN ADVANCE, ALLOWING SUFFICIENT TIME TO COMPLETE THE WORK IN ACCORDANCE WITH THE CONTRACTOR'S SCHEDULE. COORDINATION EFFORTS WILL BE CONSIDERED INCIDENTAL TO THE CONTRACT.
   A. COMED WILL TEMPORARILY RELOCATE THE DUCT PACKAGE ON THE WEST SIDE OF STATE ST THAT IS IN CONFLICT WITH THE TEMPORARY SOIL RETENTION SYSTEM FOR THE SUBWAY WORK. THIS WORK CANNOT OCCUR PRIOR TO THE WORK IN THIS CONTRACT AND WILL NEED TO OCCUR DURING THE CONSTRUCTION OF THIS PROJECT. THE CONTRACTOR MUST RELOCATE THE SEWER (SEE NOTE 6 ON C-613) AND WATER MAIN/SERVICES (SEE NOTE 1 ON C-623) IN THE AREA TO ENABLE COMED'S WORK. THE SEWER AND WATER MAIN/SERVICE RELOCATION IN THIS AREA MUST BE PERFORMED EARLY IN THE PROJECT TO PERMIT SUFFICIENT TIME FOR COMED'S RELOCATION, WHICH IS EXPECT TO LAST A NUMBER OF MONTHS. WHEN THE WATER AND SEWER WORK IS COMPLETE, THE CONTRACTOR MUST CONTACT COMED, PAUL EDWARDS, (INSERT PHONE NUMBER/EMAIL HERE). COMED REQUIRES 30 CALENDAR DAYS NOTICE TO MOBILIZE AND IS UNSURE OF THE DURATION OF THEIR WORK AS IT INVOLVES NUMEROUS SERVICE TRANSFERS. AT THE CONCLUSION OF THE CONTRACTOR'S UNDERGROUND WORK, AND BEFORE THE CONTRACTOR MAY RESURFACE STATE ST, COMED WILL MOVE THE DUCT PACKAGE BACK TO ITS ORIGINAL POSITION. THE CONTRACTOR MUST AGAIN CONTACT COMED AND ALLOW A NUMBER OF MONTHS FOR THIS WORK. CONTRACTOR COORDINATION WITH COMED FOR SCHEDULING, LANE CLOSURES, AND WORK SITE ACCESS WILL BE REQUIRED.

3. CONTRACTOR TO PROVIDE GRAPHIC SIGNS WARNING THE PUBLIC OF HAZARD AREAS AND EXIT SIGNS.

4. ADDITIONAL SIGNS MAY BE REQUIRED AS DIRECTED BY THE COMMISSIONER AT NO ADDITIONAL COST. AREAS WITHIN THE WORK ZONE THAT DO NOT INHIBIT DRIVEWAY, LOADING ZONE, OR BUILDING ACCESS MAY BE USED AS STAGING AREAS.

STREETS, SIDEWALKS, AND PUBLIC RIGHTS-OF-WAY

5. CONTRACTOR WILL BE ALLOWED TO STORE MATERIALS AND EQUIPMENT ONLY IN AREAS APPROVED BY THE COMMISSIONER AND IN ACCORDANCE WITH REQUIREMENTS AND THE CONTRACT DOCUMENTS.

6. IF AN ON-SITE WORK TRAILER WILL BE USED, CONTRACTOR TO COORDINATE WITH THE COMMISSIONER REGARDING LOCATION AND PLACEMENT.

SIDEWALK VAULTS

7. WORK INVOLVES MODIFICATION OF STRUCTURAL, ELECTRICAL, MECHANICAL, PLUMBING, COMMUNICATION, FIRE PROTECTION, AND ARCHITECTURAL FINISHES IN THE FOLLOWING SIDEWALK VAULTS. CONTRACTOR IS RESPONSIBLE FOR SECURING ALL RIGHTS OF ENTRY AND FOR COORDINATING WITH THE BUILDING OWNERS.
   A. 175 N STATE ST (CHICAGO THEATER)
   B. 177 N STATE ST (PAGE BROTHERS BUILDING MARC REALTY)
   C. 190 N STATE ST (STATE/LAKE BUILDING WLS-TV)

8 CONTRACTOR TO PROVIDE THEIR OWN ACCESS TO THE VAULT SPACES. ACCESS THROUGH THE BUILDING WILL NOT BE ALLOWED. IT IS THE CONTRACTOR'S RESPONSIBILITY TO ENSURE THAT THESE SPACES REMAIN WATERTIGHT AND SECURE.

9. CONTRACTOR TO CONFIRM BEARING CAPACITY AT VAULTED SIDEWALKS PRIOR TO SETTING ANY EQUIPMENT OR MATERIAL.

NOISE

10. CONTRACTOR WORK DURING CTA NON-REVENUE PERIODS NECESSITATES CERTAIN WORK AT NIGHT. DURING NIGHTTIME HOURS, THE CONTRACTOR MUST EMPLOY MEASURES TO REDUCE, MUFFLE, AND MITIGATE NOISE AND MAY NOT GENERATE UNNEEDED NOISE. THE CONTRACTOR MUST FURNISH THE COMMISSIONER WITH 4 WEEKS ADVANCE NOTICE OF PERIODS WHEN NOISY NIGHT WORK WILL OCCUR FOR THE PURPOSE OF CITY NOTIFICATION OF AREA BUSINESSES AND RESIDENTS.

CTA FACILITIES AND RAIL OPERATIONS

11. NO LIFTING OR JACKING OF THE CTA STRUCTURE MAY BE PERFORMED WHILE REVENUE TRAINS ARE IN SERVICE.

12. NO WORK WILL BE ALLOWED AT THE PLATFORM BEFORE A CONSTRUCTION PHASING PLAN WITH MATERIAL/EQUIPMENT STAGING PLAN IS APPROVED BY COMMISSIONER AND THE CONTRACTOR OBTAINS A BUILDING PERMIT.

13. CONDUITS AND CABLES ON THE CTA STRUCTURE WILL BE RELOCATED BY THE CONTRACTOR AND TEMPORARILY SUPPORTED UNTIL THE NEW PLATFORM AND TRACK STRUCTURE IS IN PLACE.

14. ALL TRACK LEVEL WORK AND WORK ADJACENT TO THE TRACK LEVEL SHALL BE COMPLETED UNDER FLAGGING. COORDINATION OF FLAGGING IS THE RESPONSIBILITY OF THE CONTRACTOR. CONTRACTOR MUST RECEIVE CONFIRMATION THAT CTA SUPERVISION AND FLAGGING IS AVAILABLE PRIOR TO COMMENCEMENT OF WORK.

15. ALL UNFINISHED WORK MUST BE PROPERLY SECURED IN PLACE AND PRESENT NO DANGER TO CTA PATRONS, PERSONNEL AND EQUIPMENT. AT EACH WORK PERIOD COMPLETION, THE CONTRACTOR SHALL REMOVE AND/OR PLACE INTO THE STORAGE AREA ALL CONSTRUCTION EQUIPMENT, MATERIALS, DEBRIS AND CLEAR THE AREA FOR CTA OPERATIONS.

16. TRACK REROUTES AND ANY CONSTRUCTION WHICH IN THE OPINION OF THE COMMISSIONER MAY POSE A THREAT TO CTA SERVICE ON OR ADJACENT TO ACTIVE CTA RIGHT-OF-WAY AT TRACK LEVEL WILL NOT BE PERMITTED DURING MONDAY-FRIDAY 5:00 AM TO 7:00 PM OR DURING SPECIAL EVENTS. SPECIAL EVENTS ARE AS DEFINED IN SPECIFICATION SECTION 01 35 00 SPECIAL PROJECT PROCEDURES.

17. EXCEPT AS NOTED IN THE CONTRACT DOCUMENTS, THE LAKE RED LINE STATION AND LAKE/RANDOLPH MEZZANINE AND ENTRANCES/EXITS TO THE STATION WILL REMAIN OPEN AND IN SERVICE, INCLUDING ALL LIGHTING, SIGNAGE, COMMUNICATIONS SYSTEMS, AND OTHER OPERATIONAL AND SERVICE-RELATED INFRASTRUCTURE. WHEN CLOSURE OF THE LAKE/RANDOLPH MEZZANINE IS PERMITTED BY THE CONTRACT DOCUMENTS, THE CONTRACTOR MUST MAINTAIN EMERGENCY EGRESS FROM THE PLATFORM TO THE STREET LEVEL THROUGH THIS MEZZANINE. QUANTITY LIMITS ON STATION MEZZANINE CLOSURE ARE AS STATED BELOW, WITH SCHEDULE DEPENDENT ON APPROVAL BY THE COMMISSIONER.
   A. MEZZANINE CLOSURE (WITH EMERGENCY EGRESS FROM THE PLATFORM MAINTAINED) (30 CONSECUTIVE CALENDAR DAYS) SHALL NOT EXCEED 1 OCCURRENCE.

18. THE CONTRACTOR MUST COORDINATE ALL CONSTRUCTION RELATED ACTIVITIES WITH THE CTA'S NORMAL TRAIN SCHEDULE AND OPERATION REQUIREMENTS. TRACK CLOSURE OUTSIDE OF THE NORMAL NIGHTTIME PERIODS WHEN REVENUE SERVICE IS NOT OPERATIONAL WILL NOT BE ALLOWED, EXCEPT AT SPECIFICALLY PERMITTED AND DESCRIBED IN THE CONSTRUCTION DOCUMENTS, INCLUDING NOTE BELOW. THE CURRENT CTA TRAIN SCHEDULE, WHICH IDENTIFIES HOURS OF ALL CTA RAIL LINES IS AVAILABLE ON CTA'S WEBSITE AND SUBJECT TO CHANGE. SEE SPECIFICATION SECTION 01 35 00 SPECIAL PROJECT PROCEDURES.

19. QUANTITY LIMITS ON TRACK ACCESS OCCURRENCES ARE AS STATED BELOW, WITH SCHEDULE DEPENDENT ON APPROVAL BY THE COMMISSIONER. REFER TO SPECIFICATION SECTION 01 35 00 SPECIAL PROJECT PROCEDURES FOR ADJACENT CONSTRUCTION AND ADDITIONAL CONSTRAINTS.
   A. LOOP ELEVATED
      I. WEEKEND TWO-TRACK RE-ROUTES (54 HOUR) SHALL NOT EXCEED 1 OCCURRENCE. THIS CLOSURE IS INTENDED FOR THE ELEVATED SPAN REPLACEMENT OVER STATE ST. IF THE CONTRACTOR'S SCHEDULE PERMITS THIS CLOSURE TO OCCUR OVER LABOR DAY OR MEMORIAL DAY WEEKENDS AND MAJOR EVENTS ARE NOT SCHEDULED FOR THE LOOP AREA, CDOT AND CTA MAY PERMIT ADDITIONAL RE-ROUTE DURATION OF 20-24 HOURS (TOTAL RE-ROUTE DURATION OF 74-78 HOURS, AT CTA AND CDOT DISCRETION).
      II. WEEKEND TWO-TRACK RE-ROUTES (50 HOUR) SHALL NOT EXCEED 4 OCCURRENCES.
      III. SUNDAY TWO-TRACK RE-ROUTES (12 HOUR) SHALL NOT EXCEED 1 OCCURRENCE.
      IV. SUNDAY ONE-TRACK RE-ROUTES (12 HOUR) SHALL NOT EXCEED 4 OCCURRENCES.
   B. RED LINE SUBWAY
      I. WEEKEND TWO-TRACK RE-ROUTES (50 HOUR) SHALL NOT EXCEED 2 OCCURRENCES.
      II. SUNDAY TWO-TRACK RE-ROUTES (12 HOUR) SHALL NOT EXCEED 1 OCCURRENCE.

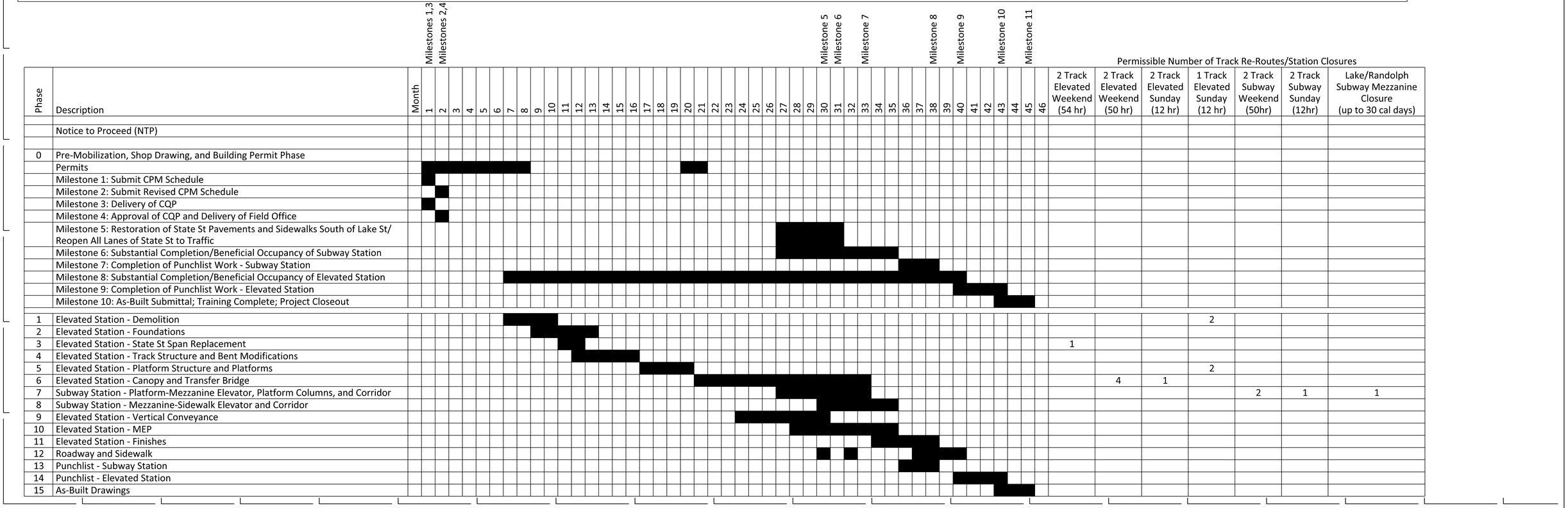

Phase	Description	2 Track Elevated Weekend (54 hr)	2 Track Elevated Weekend (50 hr)	2 Track Elevated Sunday (12 hr)	1 Track Elevated Sunday (12 hr)	2 Track Subway Weekend (50hr)	2 Track Subway Sunday (12hr)	Lake/Randolph Subway Mezzanine Closure (up to 30 cal days)
	Permissible Number of Track Re-Routes/Station Closures							
	Notice to Proceed (NTP)							
0	Pre-Mobilization, Shop Drawing, and Building Permit Phase							
	Permits							
	Milestone 1: Submit CPM Schedule							
	Milestone 2: Submit Revised CPM Schedule							
	Milestone 3: Delivery of CQP							
	Milestone 4: Approval of CQP and Delivery of Field Office							
	Milestone 5: Restoration of State St Pavements and Sidewalks South of Lake St/ Reopen All Lanes of State St to Traffic							
	Milestone 6: Substantial Completion/Beneficial Occupancy of Subway Station							
	Milestone 7: Completion of Punchlist Work - Subway Station							
	Milestone 8: Substantial Completion/Beneficial Occupancy of Elevated Station							
	Milestone 9: Completion of Punchlist Work - Elevated Station							
	Milestone 10: As-Built Submittal; Training Complete; Project Closeout							
1	Elevated Station - Demolition				2			
2	Elevated Station - Foundations							
3	Elevated Station - State St Span Replacement	1						
4	Elevated Station - Track Structure and Bent Modifications							
5	Elevated Station - Platform Structure and Platforms				2			
6	Elevated Station - Canopy and Transfer Bridge		4	1				
7	Subway Station - Platform-Mezzanine Elevator, Platform Columns, and Corridor					2	1	1
8	Subway Station - Mezzanine-Sidewalk Elevator and Corridor							
9	Elevated Station - Vertical Conveyance							
10	Elevated Station - MEP							
11	Elevated Station - Finishes							
12	Roadway and Sidewalk							
13	Punchlist - Subway Station							
14	Punchlist - Elevated Station							
15	As-Built Drawings							

1 2 3 4 5 6 7 8 9 10 11 12 13 14 15 16 17 18 19 20

DESIGN BY:										
DRAWN BY:										
CHECKED BY:										
APPROVED BY:		4	7/3/2023	ISSUED FOR BID						
CDOT/APPROVED BY:		NO.	DATE	REVISIONS	DES.	DRW.	CHK.	DCCO	CDOT	

TRANSYSTEMS
222 SOUTH RIVERSIDE PLAZA SUITE 610
CHICAGO, ILLINOIS 60606

SKIDMORE, OWINGS & MERRILL LLP
224 SOUTH MICHIGAN AVENUE, SUITE 1000
CHICAGO, ILLINOIS 60604

MICHAEL J. LEY
062-055367
LICENSED PROFESSIONAL ENGINEER
ILLINOIS

CHICAGO DEPARTMENT OF TRANSPORTATION
DIVISION OF ENGINEERING

STATE / LAKE LOOP ELEVATED STATION
200 NORTH STATE STREET, CHICAGO, IL 60601

SUGGESTED CONSTRUCTION SEQUENCE

CDOT PROJECT D-1-209

DATE: 7/3/2023

SPEC. NO.

DRAWING NO. G-110

REVISION NO.

1 VIEW FROM SOUTH STATE STREET - NIGHT

FOR GENERAL INFORMATION ONLY

DESIGN BY:										
DRAWN BY:		4	7/3/2023	ISSUED FOR BID						
CHECKED BY:		1	11/4/2022	ISSUED FOR PERMIT REVISION 1						
APPROVED BY:		0	9/9/2022	ISSUED FOR PERMIT	MN	KH	SD			
CDOT/APPROVED BY:		NO.	DATE	REVISIONS	DES.	DRW.	CHK.	DCCO	CDOT	

TranSystems
TRANSYSTEMS
222 SOUTH RIVERSIDE PLAZA SUITE 610
CHICAGO, ILLINOIS 60606

SOM
SKIDMORE, OWINGS & MERRILL LLP
224 SOUTH MICHIGAN AVENUE, SUITE 1000
CHICAGO, ILLINOIS 60604

CDOT
CHICAGO DEPARTMENT OF TRANSPORTATION
DIVISION OF ENGINEERING

STATE / LAKE LOOP ELEVATED STATION
200 NORTH STATE STREET, CHICAGO, IL 60601

RENDERINGS

SPEC. NO.

DRAWING NO. G-201

CDOT PROJECT D-1-209 | DATE: 9/9/2022 | REVISION NO. 1

1 **VIEW FROM SOUTH STATE STREET - DAY**

FOR GENERAL INFORMATION ONLY

DESIGN BY:										
DRAWN BY:		4	7/3/2023	ISSUED FOR BID						
CHECKED BY:		1	11/4/2022	ISSUED FOR PERMIT REVISION 1						
APPROVED BY:		0	9/9/2022	ISSUED FOR PERMIT	MN	KH	SD			
CDOT/APPROVED BY:		NO.	DATE	REVISIONS	DES.	DRW.	CHK.	DCCO	CDOT	

TRANSYSTEMS
222 SOUTH RIVERSIDE PLAZA SUITE 610
CHICAGO, ILLINOIS 60606

SKIDMORE, OWINGS & MERRILL LLP
224 SOUTH MICHIGAN AVENUE, SUITE 1000
CHICAGO, ILLINOIS 60604

CHICAGO DEPARTMENT OF TRANSPORTATION
DIVISION OF ENGINEERING

STATE / LAKE LOOP ELEVATED STATION
200 NORTH STATE STREET, CHICAGO, IL 60601

SPEC. NO.

RENDERINGS

DRAWING NO.
G-202

CDOT PROJECT D-1-209

DATE: 9/9/2022

REVISION NO.1

1 AERIAL VIEW

FOR GENERAL INFORMATION ONLY

DESIGN BY:										
DRAWN BY:		4	7/3/2023	ISSUED FOR BID						
CHECKED BY:		1	11/4/2022	ISSUED FOR PERMIT REVISION 1						
APPROVED BY:		0	9/9/2022	ISSUED FOR PERMIT	MN	KH	SD			
CDOT/APPROVED BY:		NO.	DATE	REVISIONS	DES.	DRW.	CHK.	DCCO	CDOT	

TRANSYSTEMS
222 SOUTH RIVERSIDE PLAZA SUITE 610
CHICAGO, ILLINOIS 60606

SKIDMORE, OWINGS & MERRILL LLP
224 SOUTH MICHIGAN AVENUE, SUITE 1000
CHICAGO, ILLINOIS 60604

CHICAGO DEPARTMENT OF TRANSPORTATION
DIVISION OF ENGINEERING

STATE / LAKE LOOP ELEVATED STATION
200 NORTH STATE STREET, CHICAGO, IL 60601

SPEC. NO.

RENDERINGS

DRAWING NO. G-203

CDOT PROJECT D-1-209 | DATE: 9/9/2022 | REVISION NO.1

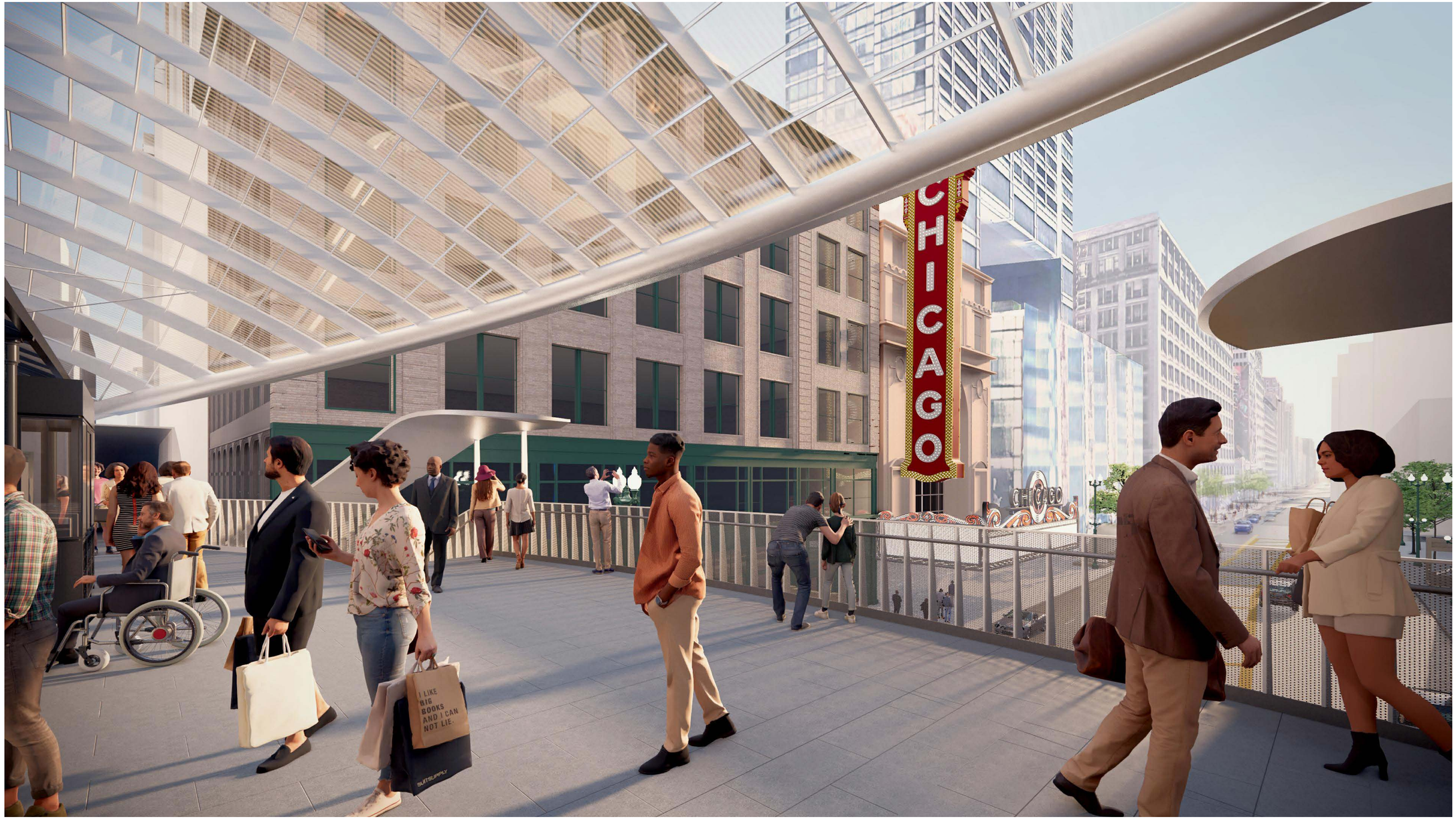

1 **VIEW FROM SOUTH STATION HOUSE**

FOR GENERAL INFORMATION ONLY

DESIGN BY:										
DRAWN BY:		4	7/3/2023	ISSUED FOR BID						
CHECKED BY:		1	11/4/2022	ISSUED FOR PERMIT REVISION 1						
APPROVED BY:		0	9/9/2022	ISSUED FOR PERMIT	MN	KH	SD			
CDOT/APPROVED BY:		NO.	DATE	REVISIONS	DES.	DRW.	CHK.	DCCO	CDOT	

TRANSYSTEMS
222 SOUTH RIVERSIDE PLAZA SUITE 610
CHICAGO, ILLINOIS 60606

SKIDMORE, OWINGS & MERRILL LLP
224 SOUTH MICHIGAN AVENUE, SUITE 1000
CHICAGO, ILLINOIS 60604

CHICAGO DEPARTMENT OF TRANSPORTATION
DIVISION OF ENGINEERING

STATE / LAKE LOOP ELEVATED STATION
200 NORTH STATE STREET, CHICAGO, IL 60601

SPEC. NO.

RENDERINGS

DRAWING NO.
G-204

CDOT PROJECT D-1-209

DATE: 9/9/2022

REVISION NO. 1

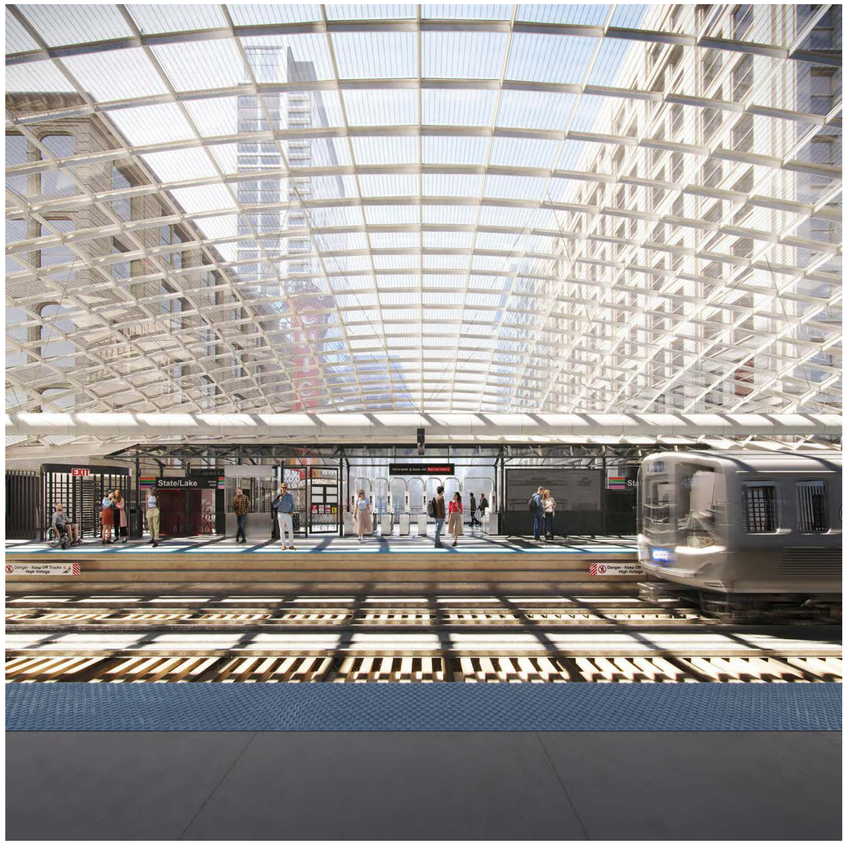

2 VIEW OF PLATFORM

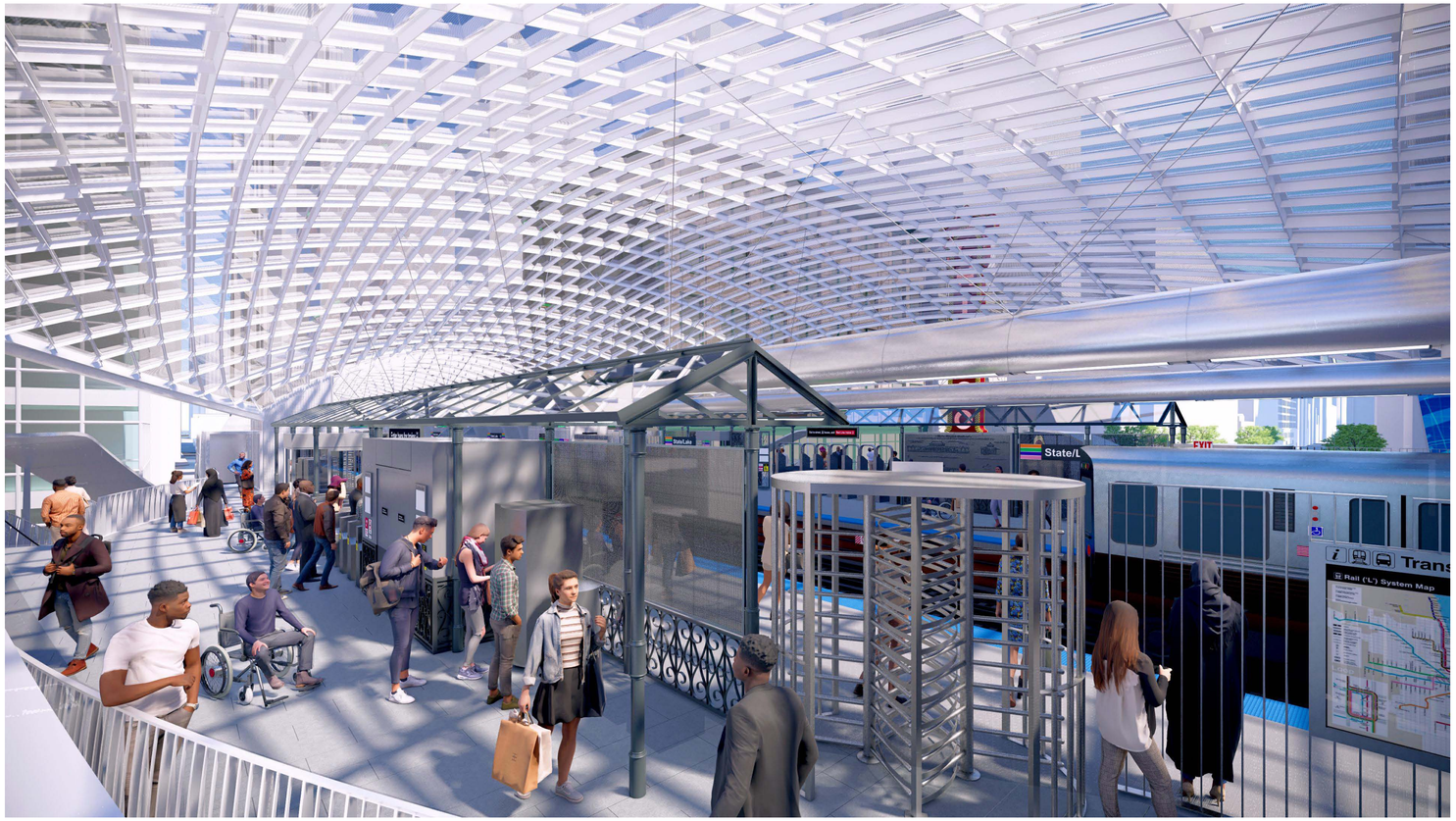

1 VIEW OF STATION HOUSE

FOR GENERAL INFORMATION ONLY

DESIGN BY:									
DRAWN BY:		4	7/3/2023	ISSUED FOR BID					
CHECKED BY:		1	11/4/2022	ISSUED FOR PERMIT REVISION 1					
APPROVED BY:		0	9/9/2022	ISSUED FOR PERMIT	MN	KH	SD		
CDOT/APPROVED BY:		NO.	DATE	REVISIONS	DES.	DRW.	CHK.	DCCO	CDOT

TRANSYSTEMS
222 SOUTH RIVERSIDE PLAZA SUITE 610
CHICAGO, ILLINOIS 60606

SKIDMORE, OWINGS & MERRILL LLP
224 SOUTH MICHIGAN AVENUE, SUITE 1000
CHICAGO, ILLINOIS 60604

CHICAGO DEPARTMENT
OF TRANSPORTATION
DIVISION OF ENGINEERING

STATE / LAKE LOOP ELEVATED STATION
200 NORTH STATE STREET, CHICAGO, IL 60601

SPEC. NO.

RENDERINGS

DRAWING NO.
G-205

CDOT PROJECT D-1-209

DATE: 9/9/2022

REVISION NO.1

GSG CONSULTANTS, INC.
735 Remington Road, Schaumburg, IL 60173
Tel: 630.994.2600, www.gsg-consultants.com

BORING NUMBER B-01
PAGE 1 OF 4

CLIENT Transystem
PROJECT NUMBER 20-1038
DATE STARTED 11/8/21 **COMPLETED** 11/9/21
DRILLING CONTRACTOR GSG Drilling
DRILLING METHOD Mud Rotary
LOGGED BY JEB **CHECKED BY** MZ
NOTES Drill rig: CME

PROJECT NAME CTA State-Lake Station
PROJECT LOCATION Lake St. at State St., Chicago
GROUND ELEVATION 14.00 ft CCD **HOLE SIZE** 3 1/4
GROUND WATER LEVELS:
AT TIME OF DRILLING --- None
AT END OF DRILLING --- NA
AFTER DRILLING --- NA

DEPTH (ft)	GRAPHIC LOG	MATERIAL DESCRIPTION	SAMPLE TYPE NUMBER	RECOVERY (%)	BLOW COUNTS (N VALUE)	UNCONFINED COMPRESSION (tsf)	▲ SPT N VALUE 20 40 60 80 / ● Moisture Content 10 20 30 40 / ☐ Unconfined Compression (tsf) 2 4 6 8
0		8 inches of Asphalt					
		4 inches of Granite Paver					
		Hydrovac					
		Brick fragments at 1.0 to 10 feet					
5		Granite Paver fragments at 5 to 10 feet					
10		FILL: Sand and Gravel - Brown- Moist	SS 5	78	7-18-11 (29)		
15		SILTY CLAY (CL/ML), Gray- Medium Stiff- Moist to Very Moist	SS 6	8	3-3-1 (4)		
			SS 7	100	1-2-3 (5)	0.5	
20			SS 8	100	0-0-1 (1)	1.0	
		SILTY CLAY (CL/ML), Gray- Soft to Medium Stiff- Moist to Very Moist	SS 9	100	0-0-0 (0)	0.5	
25			SS 10	100	0-0-0 (0)	0.5	
		Vane Shear @27.5' Shear Strength = 0.58 tsf Remolded = 0.36 tsf	SS 12	100	0-0-0 (0)	0	
35			SS 13	100	0-0-0 (0)	0	

(Continued Next Page)

GSG CONSULTANTS, INC.
735 Remington Road, Schaumburg, IL 60173
Tel: 630.994.2600, www.gsg-consultants.com

BORING NUMBER B-01
PAGE 2 OF 4

CLIENT Transystem
PROJECT NUMBER 20-1038

PROJECT NAME CTA State-Lake Station
PROJECT LOCATION Lake St. at State St., Chicago

DEPTH (ft)	GRAPHIC LOG	MATERIAL DESCRIPTION	SAMPLE TYPE NUMBER	RECOVERY (%)	BLOW COUNTS (N VALUE)	UNCONFINED COMPRESSION (tsf)	▲ SPT N VALUE 20 40 60 80 / ● Moisture Content 10 20 30 40 / ☐ Unconfined Compression (tsf) 2 4 6 8
35		SILTY CLAY (CL/ML), Gray- Soft to Medium Stiff- Moist to Very Moist *(continued)*					
		Vane Shear @37.5' Shear Strength = 0.78 tsf Remolded = 0.58 tsf	SS 14	100	0-0-1 (1)	0.5	
40							
		Push rock at 43.5 feet	SS 15	6	0-0-0 (0)	0.5	
45							
		Vane Shear @47.5' Shear Strength > 0.78 tsf Remolded = 0.52 tsf Push rock at 48.5 feet	SS 16	0	0-0-0 (0)		
50							
			SS 17	100	0-0-2 (2)	0.5	
55		SILTY CLAY (CL/ML), Gray- Medium Stiff to Very Stiff- Moist to Very Moist					
			SS 18	100	2-3-5 (8)	1.67	
60							
		With three gravel seams at 63.5 to 85.5 feet	SS 19	100	2-5-7 (12)	1.67	
65							
			SS 20	100	2-6-8 (14)	2.08	
70							
			SS 21	100	3-9-11 (20)	2.08	
75							

(Continued Next Page)

GSG CONSULTANTS, INC.
735 Remington Road, Schaumburg, IL 60173
Tel: 630.994.2600, www.gsg-consultants.com

BORING NUMBER B-01
PAGE 3 OF 4

CLIENT Transystem
PROJECT NUMBER 20-1038

PROJECT NAME CTA State-Lake Station
PROJECT LOCATION Lake St. at State St., Chicago

DEPTH (ft)	GRAPHIC LOG	MATERIAL DESCRIPTION	SAMPLE TYPE NUMBER	RECOVERY (%)	BLOW COUNTS (N VALUE)	UNCONFINED COMPRESSION (tsf)	▲ SPT N VALUE 20 40 60 80 / ● Moisture Content 10 20 30 40 / ☐ Unconfined Compression (tsf) 2 4 6 8
75		SILTY CLAY (CL/ML), Gray- Medium Stiff to Very Stiff- Moist to Very Moist *(continued)*					
80			SS 22	100	2-3-3 (6)	0.5	
85			SS 23	100	2-4-5 (9)	1.0	
90		SILTY CLAY with sand and gravel (CL-ML)- Gray- Stiff to Very Stiff- Moist	SS 24	100	17-41-50/2"	4.5	>>
95			SS 25	80	40-50/4"	4.5	>>
100			SS 26	100	50/4"	4.5	>>
105		With gravel at 103.5 feet	SS 27	86	50-50/1"	2.5	>>
110			SS 28	100	50/5"	2.71	>>
115			SS 29	100	50-50/2"	1.5	>>

(Continued Next Page)

NOTES:

1. FOR LOCATIONS OF BORINGS IN PLAN VIEW, SEE FOUNDATION LAYOUT ON SHEET S-101

DESIGN BY:	WJC									
DRAWN BY:	NRH	4	7/3/2023	ISSUED FOR BID						
CHECKED BY:	MDS	1	11/4/2022	PERMIT REVISION #1						
APPROVED BY:	WJC	0	9/9/2022	ISSUED FOR PERMIT						
CDOT/APPROVED BY:		NO.	DATE	REVISIONS	DES.	DRW.	CHK.	DCCO	CDOT	

TRANSYSTEMS
222 SOUTH RIVERSIDE PLAZA SUITE 610
CHICAGO, ILLINOIS 60606

SKIDMORE, OWINGS & MERRILL LLP
224 SOUTH MICHIGAN AVENUE, SUITE 1000
CHICAGO, ILLINOIS 60604

CHICAGO DEPARTMENT OF TRANSPORTATION
DIVISION OF ENGINEERING

STATE / LAKE LOOP ELEVATED STATION
200 NORTH STATE STREET, CHICAGO, IL 60601

BORING LOGS 1

CDOT PROJECT D-1-209 | DATE: 9/9/2022

SPEC. NO.

DRAWING NO. B-001

REVISION NO.

BORING NUMBER B-01

PAGE 4 OF 4

GSG CONSULTANTS, INC.
735 Remington Road, Schaumburg, IL 60173
Tel: 630.994.2600, www.gsg-consultants.com

CLIENT Transystem
PROJECT NAME CTA State-Lake Station
PROJECT NUMBER 20-1038
PROJECT LOCATION Lake St. at State St., Chicago

DEPTH (ft)	GRAPHIC LOG	MATERIAL DESCRIPTION	SAMPLE TYPE NUMBER	RECOVERY (%)	BLOW COUNTS (N VALUE)	UNCONFINED COMPRESSION (tsf)	▲ SPT N VALUE 20 40 60 80 / ● Moisture Content 10 20 30 40 / ☐ Unconfined Compression (tsf) 2 4 6 8
115		SILTY CLAY with sand and gravel (CL-ML)- Gray- Stiff to Very Stiff- Moist *(continued)*					
120		CLAYEY GRAVEL (GC)- Gray- Extremely Dense - Moist	SS 30	100	50/1"		>>
		LIMESTONE- Gray- Weathered Auger refusal at 122.5 feet Bottom of borehole at 122.5 feet.					

GEOTECH BH PLOTS - GINT STD US.GDT - 12/2/21 11:35 - T:\TRANSYSTEMS\CDOT STATE LAKE CTA STATION\GEOTECH\NCA\FIELD DATA\CTA STATE LAKE.GPJ

BORING NUMBER B-02

PAGE 1 OF 4

GSG CONSULTANTS, INC.
735 Remington Road, Schaumburg, IL 60173
Tel: 630.994.2600, www.gsg-consultants.com

CLIENT Transystem
PROJECT NAME CTA State-Lake Station
PROJECT NUMBER 20-1038
PROJECT LOCATION Lake St. at State St., Chicago
DATE STARTED 11/3/21 **COMPLETED** 11/4/21
GROUND ELEVATION 13.70 ft CCD **HOLE SIZE** 3 1/4
DRILLING CONTRACTOR GSG Drilling
GROUND WATER LEVELS:
DRILLING METHOD Mud Rotary
AT TIME OF DRILLING --- None
LOGGED BY EH **CHECKED BY** MZ
AT END OF DRILLING --- NA
NOTES Drill rig: Diedrich D-50 TM
AFTER DRILLING --- NA

DEPTH (ft)	GRAPHIC LOG	MATERIAL DESCRIPTION	SAMPLE TYPE NUMBER	RECOVERY (%)	BLOW COUNTS (N VALUE)	UNCONFINED COMPRESSION (tsf)	▲ SPT N VALUE 20 40 60 80 / ● Moisture Content 10 20 30 40 / ☐ Unconfined Compression (tsf) 2 4 6 8
0		3 inches of Asphalt 14 inches of Concrete Hydrovac					
5		FILL: SILT (ML), Light Brown - Moist	SS 5	78	3-3-3 (6)		
10		SILTY CLAY, trace gravel (CL/ML) - Gray - Medium Stiff to Very Stiff - Moist to Very Moist	SS 6	67	3-3-2 (5)	2.5	
15			SS 7	100	2-2-2 (4)	1.67	
20			SS 8	100	0-1-2 (3)	1.0	
25		SILTY CLAY, trace gravel (CL/ML) - Gray - Very Soft to Soft - Moist to Very Moist	SS 9	100	0-0-0 (0)	0	
			SS 10	100	0-0-0 (0)	0	
			SS 11	100	0-0-0 (0)	0.25	
30			SS 12	100	0-0-0 (0)	0	
35			SS 13	100	0-0-0 (0)	0.25	

(Continued Next Page)

GEOTECH BH PLOTS - GINT STD US.GDT - 12/2/21 11:35 - T:\TRANSYSTEMS\CDOT STATE LAKE CTA STATION\GEOTECH\NCA\FIELD DATA\CTA STATE LAKE.GPJ

BORING NUMBER B-02

PAGE 2 OF 4

GSG CONSULTANTS, INC.
735 Remington Road, Schaumburg, IL 60173
Tel: 630.994.2600, www.gsg-consultants.com

CLIENT Transystem
PROJECT NAME CTA State-Lake Station
PROJECT NUMBER 20-1038
PROJECT LOCATION Lake St. at State St., Chicago

DEPTH (ft)	GRAPHIC LOG	MATERIAL DESCRIPTION	SAMPLE TYPE NUMBER	RECOVERY (%)	BLOW COUNTS (N VALUE)	UNCONFINED COMPRESSION (tsf)	▲ SPT N VALUE 20 40 60 80 / ● Moisture Content 10 20 30 40 / ☐ Unconfined Compression (tsf) 2 4 6 8
35		SILTY CLAY, trace gravel (CL/ML) - Gray - Very Soft to Soft - Moist to Very Moist *(continued)*					
40			SS 14	100	0-0-0 (0)	0	
45			SS 15	100	0-0-0 (0)	0.5	
50			SS 16	100	0-0-0 (0)	0.25	
55		SILTY CLAY, trace gravel (CL/ML) - Gray- Stiff to Very Stiff - Moist	SS 17	100	0-3-4 (7)	1.25	
60			SS 18	100	3-3-6 (9)	2.5	
65			SS 19	100	4-4-6 (10)	2.08	
70			SS 20	100	5-5-8 (13)	2.92	
75			SS 21	100	5-5-10 (15)	3.33	

(Continued Next Page)

GEOTECH BH PLOTS - GINT STD US.GDT - 12/2/21 11:35 - T:\TRANSYSTEMS\CDOT STATE LAKE CTA STATION\GEOTECH\NCA\FIELD DATA\CTA STATE LAKE.GPJ

NOTES:

1. FOR LOCATIONS OF BORINGS IN PLAN VIEW, SEE FOUNDATION LAYOUT ON SHEET S-101

DESIGN BY:	WJC									
DRAWN BY:	NRH	4	7/3/2023	ISSUED FOR BID						
CHECKED BY:	MDS	1	11/4/2022	PERMIT REVISION #1						
APPROVED BY:	WJC	0	9/9/2022	ISSUED FOR PERMIT						
CDOT/APPROVED BY:		NO.	DATE	REVISIONS	DES.	DRW.	CHK.	DCCO	CDOT	

TRANSYSTEMS
222 SOUTH RIVERSIDE PLAZA SUITE 610
CHICAGO, ILLINOIS 60606

SKIDMORE, OWINGS & MERRILL LLP
224 SOUTH MICHIGAN AVENUE, SUITE 1000
CHICAGO, ILLINOIS 60604

CHICAGO DEPARTMENT OF TRANSPORTATION
DIVISION OF ENGINEERING

STATE / LAKE LOOP ELEVATED STATION
200 NORTH STATE STREET, CHICAGO, IL 60601

BORING LOGS 2

CDOT PROJECT D-1-209 | DATE: 9/9/2022

SPEC. NO.

DRAWING NO. B-002

REVISION NO.

BORING NUMBER B-02
PAGE 3 OF 4

GSG CONSULTANTS, INC.
735 Remington Road, Schaumburg, IL 60173
Tel: 630.996.2600, www.gsg-consultants.com

CLIENT Transystem **PROJECT NAME** CTA State-Lake Station
PROJECT NUMBER 20-1038 **PROJECT LOCATION** Lake St. at State St., Chicago

DEPTH (ft)	MATERIAL DESCRIPTION	SAMPLE TYPE NUMBER	RECOVERY (%)	BLOW COUNTS (N VALUE)	UNCONFINED COMPRESSION (tsf)	▲ SPT N VALUE / ● Moisture Content / □ Unconfined Compression (tsf)
75	SILTY CLAY, trace gravel (CL/ML) - Gray- Stiff to Very Stiff - Moist *(continued)*					
80		SS 22	100	3-4-7 (11)	2.08	
85		SS 23	100	4-7-7 (14)	3.75	
90	SILTY CLAY with sand, trace gravel (CL/ML) - Gray - Very Stiff to Hard - Moist	SS 24	100	12-40-28 (68)	5.0	
95	With Limestone fragments starting at 93.5 feet	SS 25	100	50/5"	4.5	>>
100		SS 26	50	50/4"	4.5	>>
105		SS 27	100	50/4"	4.5	>>
110	Limestone fragments at 109 feet	SS 28	50	50/2"		>>
115		SS 29	0	50/2"		>>

(Continued Next Page)

BORING NUMBER B-02
PAGE 4 OF 4

GSG CONSULTANTS, INC.
735 Remington Road, Schaumburg, IL 60173
Tel: 630.996.2600, www.gsg-consultants.com

CLIENT Transystem **PROJECT NAME** CTA State-Lake Station
PROJECT NUMBER 20-1038 **PROJECT LOCATION** Lake St. at State St., Chicago

DEPTH (ft)	MATERIAL DESCRIPTION	SAMPLE TYPE NUMBER	RECOVERY (%)	BLOW COUNTS (N VALUE)	UNCONFINED COMPRESSION (tsf)	▲ SPT N VALUE / ● Moisture Content / □ Unconfined Compression (tsf)
115	SILTY CLAY with sand, trace gravel (CL/ML) - Gray - Very Stiff to Hard - Moist *(continued)*	SS 30	17	50	4.5	
120	LIMESTONE - Gray - Highly Weathered Auger refusal at 123 feet					
125	LIMESTONE - Gray - Lighlty Fractured, Weathered, Vuggy Run 1: 123 to 133 feet Recovery: 98.3% RQD: 76.7% (Good)	RC 1	98 (77)		761	
130					799	

Bottom of borehole at 133.0 feet.

BORING NUMBER B-03
PAGE 1 OF 4

GSG CONSULTANTS, INC.
735 Remington Road, Schaumburg, IL 60173
Tel: 630.996.2600, www.gsg-consultants.com

CLIENT Transystem **PROJECT NAME** CTA State-Lake Station
PROJECT NUMBER 20-1038 **PROJECT LOCATION** Lake St. at State St., Chicago
DATE STARTED 11/3/21 **COMPLETED** 11/5/21 **GROUND ELEVATION** 14.00 ft CCD **HOLE SIZE** 3 1/4
DRILLING CONTRACTOR GSG Drilling **GROUND WATER LEVELS:**
DRILLING METHOD Mud Rotary **AT TIME OF DRILLING** --- None
LOGGED BY DM **CHECKED BY** MZ **AT END OF DRILLING** --- NA
NOTES Drill rig: CME **AFTER DRILLING** --- NA

DEPTH (ft)	MATERIAL DESCRIPTION	SAMPLE TYPE NUMBER	RECOVERY (%)	BLOW COUNTS (N VALUE)	UNCONFINED COMPRESSION (tsf)	▲ SPT N VALUE / ● Moisture Content / □ Unconfined Compression (tsf)
0	5.5 inches of Asphalt 6 inches of Concrete Hydrovac					
5	FILL: SILT (ML), Light Browm - Moist	SS 5	83	3-4-5 (9)		
10	SILTY CLAY, trace gravel (CL/ML) - Gray - Stiff to Very Stiff - Very Moist	SS 6	67	3-3-4 (7)	3.12	
15		SS 7	100	0-2-2 (4)	1.87	
20	SILTY CLAY, trace gravel (CL/ML) - Gray- Very Soft to Medium Stiff - Moist to Very Moist	SS 8	100	1-1-1 (2)	0.25	
		SS 9	100	0-0-0 (0)	0.25	
25		SS 10	100	0-0-0 (0)	0.25	
		SS 11	100	0-0-0 (0)	0.25	
30		SS 12	100	0-0-0 (0)	0.25	
35		SS 13	100	0-0-0 (0)	0.25	

(Continued Next Page)

NOTES:

1. FOR LOCATIONS OF BORINGS IN PLAN VIEW, SEE FOUNDATION LAYOUT ON SHEET S-101

DESIGN BY:	WJC									
DRAWN BY:	NRH	4	7/3/2023	ISSUED FOR BID						
CHECKED BY:	MDS	1	11/4/2022	PERMIT REVISION #1						
APPROVED BY:	WJC	0	9/9/2022	ISSUED FOR PERMIT						
CDOT/APPROVED BY:		NO.	DATE	REVISIONS	DES.	DRW.	CHK.	DCCO	CDOT	

TRANSYSTEMS
222 SOUTH RIVERSIDE PLAZA SUITE 610
CHICAGO, ILLINOIS 60606

SKIDMORE, OWINGS & MERRILL LLP
224 SOUTH MICHIGAN AVENUE, SUITE 1000
CHICAGO, ILLINOIS 60604

CHICAGO DEPARTMENT OF TRANSPORTATION
DIVISION OF ENGINEERING

STATE / LAKE LOOP ELEVATED STATION
200 NORTH STATE STREET, CHICAGO, IL 60601

BORING LOGS 3

CDOT PROJECT D-1-209 DATE: 9/9/2022

SPEC. NO.

DRAWING NO. B-003

REVISION NO.

BORING NUMBER B-03
PAGE 2 OF 4

GSG CONSULTANTS, INC.
735 Remington Road, Schaumburg, IL 60173
Tel: 630.994.3600, www.gsg-consultants.com

CLIENT Transystem **PROJECT NAME** CTA State-Lake Station
PROJECT NUMBER 20-1038 **PROJECT LOCATION** Lake St. at State St., Chicago

DEPTH (ft)	GRAPHIC LOG	MATERIAL DESCRIPTION	SAMPLE TYPE NUMBER	RECOVERY (%)	BLOW COUNTS (N VALUE)	UNCONFINED COMPRESSION (tsf)	▲ SPT N VALUE 20 40 60 80 / ● Moisture Content 10 20 30 40 / □ Unconfined Compression (tsf) 2 4 6 8
35		SILTY CLAY, trace gravel (CL/ML) - Gray- Very Soft to Medium Stiff - Moist to Very Moist *(continued)*					
40			SS 14	100	0-0-0 (0)	0.25	
45			SS 15	100	0-0-0 (0)	0.25	
50		SILTY CLAY, trace gravel (CL/ML) - Gray- Stiff to Very Stiff- Moist	SS 16	100	0-1-3 (4)	0.75	
55			SS 17	100	0-0-4 (4)	1.25	
60			SS 18	100	1-3-4 (7)	1.67	
65			SS 19	100	3-6-7 (13)	2.08	
70			SS 20	89	3-6-9 (15)	2.71	
75			SS 21	100	8-1-12 (13)	3.12	

(Continued Next Page)

GEOTECH BH PLOTS - GINT STD US.GDT - 12/2/21 11:35 - T:\TRANSYSTEMS\CDOT STATE LAKE CTA STATION\GEOTECH\NCA\FIELD DATA\CTA STATE LAKE.GPJ

BORING NUMBER B-03
PAGE 3 OF 4

GSG CONSULTANTS, INC.
735 Remington Road, Schaumburg, IL 60173
Tel: 630.994.3600, www.gsg-consultants.com

CLIENT Transystem **PROJECT NAME** CTA State-Lake Station
PROJECT NUMBER 20-1038 **PROJECT LOCATION** Lake St. at State St., Chicago

DEPTH (ft)	GRAPHIC LOG	MATERIAL DESCRIPTION	SAMPLE TYPE NUMBER	RECOVERY (%)	BLOW COUNTS (N VALUE)	UNCONFINED COMPRESSION (tsf)	▲ SPT N VALUE 20 40 60 80 / ● Moisture Content 10 20 30 40 / □ Unconfined Compression (tsf) 2 4 6 8
75		SILTY CLAY, trace gravel (CL/ML) - Gray- Stiff to Very Stiff- Moist *(continued)*					
80			SS 22	100	1-3-3 (6)	1.25	
85			SS 23	100	2-4-5 (9)	1.25	
90		SILTY CLAY, with sand and gravel (CL/ML) - Gray - Hard- Moist	SS 24	22	56-0-0 (0)	4.5	
95			SS 25	100	38-44-56 (100)	4.5	
100			SS 26	100	53/4"	4.5	>>
105			SS 27	50	50/4"	4.5	>>
110			SS 28	100	50/4"	4.5	>>
115			SS 29	100	52/4"	4.5	>>

(Continued Next Page)

GEOTECH BH PLOTS - GINT STD US.GDT - 12/2/21 11:35 - T:\TRANSYSTEMS\CDOT STATE LAKE CTA STATION\GEOTECH\NCA\FIELD DATA\CTA STATE LAKE.GPJ

BORING NUMBER B-03
PAGE 4 OF 4

GSG CONSULTANTS, INC.
735 Remington Road, Schaumburg, IL 60173
Tel: 630.994.3600, www.gsg-consultants.com

CLIENT Transystem **PROJECT NAME** CTA State-Lake Station
PROJECT NUMBER 20-1038 **PROJECT LOCATION** Lake St. at State St., Chicago

DEPTH (ft)	GRAPHIC LOG	MATERIAL DESCRIPTION	SAMPLE TYPE NUMBER	RECOVERY (%)	BLOW COUNTS (N VALUE)	UNCONFINED COMPRESSION (tsf)	▲ SPT N VALUE 20 40 60 80 / ● Moisture Content 10 20 30 40 / □ Unconfined Compression (tsf) 2 4 6 8
115		SILTY CLAY, with sand and gravel (CL/ML) - Gray - Hard- Moist *(continued)*					
120			SS 30	0	50/4"		>>
		LIMESTONE- Gray - Weathered					
		Auger refusal at 123.5 feet					
		Bottom of borehole at 123.5 feet.					

GEOTECH BH PLOTS - GINT STD US.GDT - 12/2/21 11:35 - T:\TRANSYSTEMS\CDOT STATE LAKE CTA STATION\GEOTECH\NCA\FIELD DATA\CTA STATE LAKE.GPJ

NOTES:

1. FOR LOCATIONS OF BORINGS IN PLAN VIEW, SEE FOUNDATION LAYOUT ON SHEET S-101

DESIGN BY:	WJC									
DRAWN BY:	NRH	4	7/3/2023	ISSUED FOR BID						
CHECKED BY:	MDS	1	11/4/2022	PERMIT REVISION #1						
APPROVED BY:	WJC	0	9/9/2022	ISSUED FOR PERMIT						
CDOT/APPROVED BY:		NO.	DATE	REVISIONS	DES.	DRW.	CHK.	DCCO	CDOT	

TRANSYSTEMS
222 SOUTH RIVERSIDE PLAZA SUITE 610
CHICAGO, ILLINOIS 60606

SKIDMORE, OWINGS & MERRILL LLP
224 SOUTH MICHIGAN AVENUE, SUITE 1000
CHICAGO, ILLINOIS 60604

CHICAGO DEPARTMENT OF TRANSPORTATION
DIVISION OF ENGINEERING

STATE / LAKE LOOP ELEVATED STATION
200 NORTH STATE STREET, CHICAGO, IL 60601

BORING LOGS 4

CDOT PROJECT D-1-209 | DATE: 9/9/2022

SPEC. NO.

DRAWING NO. B-004

REVISION NO.

BORING NUMBER B-04
PAGE 1 OF 4

GSG CONSULTANTS, INC.
735 Remington Road, Schaumburg, IL 60173
Tel: 630.994.2600, www.gsg-consultants.com

CLIENT Transystem
PROJECT NUMBER 20-1038
DATE STARTED 11/5/21 **COMPLETED** 11/5/21
DRILLING CONTRACTOR GSG Drilling
DRILLING METHOD Mud Rotary
LOGGED BY JEB **CHECKED BY** MZ
NOTES Drill rig: CME

PROJECT NAME CTA State-Lake Station
PROJECT LOCATION Lake St. at State St., Chicago
GROUND ELEVATION 13.60 ft CCD **HOLE SIZE** 3 1/4
GROUND WATER LEVELS:
AT TIME OF DRILLING --- None
AT END OF DRILLING --- NA
AFTER DRILLING --- NA

DEPTH (ft)	GRAPHIC LOG	MATERIAL DESCRIPTION	SAMPLE TYPE NUMBER	RECOVERY (%)	BLOW COUNTS (N VALUE)	UNCONFINED COMPRESSION (tsf)
0		4 inches of Asphalt 9.5 inches of Concrete Hydrovac Debris and Bricks at 1 to 10 feet				
5		Fragments of Granite Pavers at 5 to 10 feet				
10		FILL: SAND and GRAVEL - Brown - Moist				
15		FILL: SILTY CLAY (CL/ML), with sand pocket - Brown and Gray - Stiff - Very Moist	SS 6	78	5-2-1 (3)	1.25
20		SILTY CLAY, trace gravel (CL/ML), Gray - Medium Stiff - Moist to Very Moist	SS 7	89	0-1-1 (2)	1.0
			SS 8	100	0-0-0 (0)	0.5
		SILTY CLAY, trace gravel (CL/ML), Gray - Soft to Medium Stiff - Moist to Very Moist	SS 9	100	0-0-0 (0)	0.5
25			SS 10	61	0-0-0 (0)	0.5
			SS 11	100	0-0-0 (0)	0
30		2 inches of Gravel Seam at 29 feet	SS 12	100	0-1-1 (2)	0.5
35			SS 13	78	0-0-0 (0)	0.5

▲ SPT N VALUE 20 40 60 80
● Moisture Content 10 20 30 40
□ Unconfined Compression (tsf) 2 4 6 8

(Continued Next Page)

BORING NUMBER B-04
PAGE 2 OF 4

GSG CONSULTANTS, INC.
735 Remington Road, Schaumburg, IL 60173
Tel: 630.994.2600, www.gsg-consultants.com

CLIENT Transystem
PROJECT NUMBER 20-1038
PROJECT NAME CTA State-Lake Station
PROJECT LOCATION Lake St. at State St., Chicago

DEPTH (ft)	GRAPHIC LOG	MATERIAL DESCRIPTION	SAMPLE TYPE NUMBER	RECOVERY (%)	BLOW COUNTS (N VALUE)	UNCONFINED COMPRESSION (tsf)
35		SILTY CLAY, trace gravel (CL/ML), Gray - Soft to Medium Stiff - Moist to Very Moist *(continued)*				
40			SS 14	56	0-0-1 (1)	0
45		Push rock at 43.5 feet	SS 15	6	0-1-2 (3)	
50		2 inches of gravel Seam at 49 feet	SS 16	100	0-6-1 (7)	0.5
55		Clayey gravel, some sand at 54 to 58.5 feet	SS 17	100	1-3-3 (6)	0.5
60			SS 18	72	2-3-3 (6)	0.5
		SILTY CLAY (CL/ML), Gray - Stiff to Hard - Moist				
65			SS 19	100	2-4-4 (8)	1.67
70			SS 20	100	4-7-9 (16)	1.67
75			SS 21	100	11-9-7 (16)	2.0

▲ SPT N VALUE 20 40 60 80
● Moisture Content 10 20 30 40
□ Unconfined Compression (tsf) 2 4 6 8

(Continued Next Page)

BORING NUMBER B-04
PAGE 3 OF 4

GSG CONSULTANTS, INC.
735 Remington Road, Schaumburg, IL 60173
Tel: 630.994.2600, www.gsg-consultants.com

CLIENT Transystem
PROJECT NUMBER 20-1038
PROJECT NAME CTA State-Lake Station
PROJECT LOCATION Lake St. at State St., Chicago

DEPTH (ft)	GRAPHIC LOG	MATERIAL DESCRIPTION	SAMPLE TYPE NUMBER	RECOVERY (%)	BLOW COUNTS (N VALUE)	UNCONFINED COMPRESSION (tsf)
75		SILTY CLAY (CL/ML), Gray - Stiff to Hard - Moist *(continued)*				
80			SS 22	100	6-7-8 (15)	1.0
85		SILTY CLAY with sand and gravel (CL/ML)- Gray - Stiff to Hard - Moist	SS 23	100	4-6-11 (17)	4.58
90			SS 24	100	35-41-50/5"	4.58
95			SS 25	89	28-36-41 (77)	4.5
100		With Gravel at 98.5 to 113.5 feet	SS 26	100	50/4"	4.5
105			SS 27	100	50/4"	4.5
			SS 28	100	50/5"	4.5
110						
115		LIMESTONE FRAGMENTS with gravel, some clay- Gray- Moist	SS 29	50	50/2"	

▲ SPT N VALUE 20 40 60 80
● Moisture Content 10 20 30 40
□ Unconfined Compression (tsf) 2 4 6 8

(Continued Next Page)

NOTES:

1. FOR LOCATIONS OF BORINGS IN PLAN VIEW, SEE FOUNDATION LAYOUT ON SHEET S-101

DESIGN BY:	WJC									
DRAWN BY:	NRH	4	7/3/2023	ISSUED FOR BID						
CHECKED BY:	MDS	1	11/4/2022	PERMIT REVISION #1						
APPROVED BY:	WJC	0	9/9/2022	ISSUED FOR PERMIT						
CDOT/APPROVED BY:		NO.	DATE	REVISIONS	DES.	DRW.	CHK.	DCCO	CDOT	

TRANSYSTEMS
222 SOUTH RIVERSIDE PLAZA SUITE 610
CHICAGO, ILLINOIS 60606

SKIDMORE, OWINGS & MERRILL LLP
224 SOUTH MICHIGAN AVENUE, SUITE 1000
CHICAGO, ILLINOIS 60604

CHICAGO DEPARTMENT OF TRANSPORTATION
DIVISION OF ENGINEERING

STATE / LAKE LOOP ELEVATED STATION
200 NORTH STATE STREET, CHICAGO, IL 60601

BORING LOGS 5

CDOT PROJECT D-1-209 | DATE: 9/9/2022

SPEC. NO.

DRAWING NO. B-005

REVISION NO.

BORING NUMBER B-04

PAGE 4 OF 4

GSG CONSULTANTS, INC.
735 Remington Road, Schaumburg, IL 60173
Tel: 630.996.2600, www.gsg-consultants.com

CLIENT Transystem
PROJECT NAME CTA State-Lake Station
PROJECT NUMBER 20-1038
PROJECT LOCATION Lake St. at State St., Chicago

DEPTH (ft)	GRAPHIC LOG	MATERIAL DESCRIPTION	SAMPLE TYPE NUMBER	RECOVERY (%)	BLOW COUNTS (N VALUE)	UNCONFINED COMPRESSION (tsf)	▲ SPT N VALUE 20 40 60 80 / ● Moisture Content 10 20 30 40 / ☐ Unconfined Compression (tsf) 2 4 6 8
115		LIMESTONE FRAGMENTS with gravel, some clay- Gray- Moist *(continued)*					
120		LIMESTONE - Gray - Highly Weathered Auger refusal at 120.5 feet Bottom of borehole at 120.5 feet.					

BORING NUMBER B-05

PAGE 1 OF 4

GSG CONSULTANTS, INC.
735 Remington Road, Schaumburg, IL 60173
Tel: 630.996.2600, www.gsg-consultants.com

CLIENT Transystem
PROJECT NAME CTA State-Lake Station
PROJECT NUMBER 20-1038
PROJECT LOCATION Lake St. at State St., Chicago
DATE STARTED 11/10/21 **COMPLETED** 11/11/21
GROUND ELEVATION 14.00 ft CCD **HOLE SIZE** 3 1/4
DRILLING CONTRACTOR GSG Drilling
GROUND WATER LEVELS:
DRILLING METHOD Mud Rotary
AT TIME OF DRILLING --- None
LOGGED BY DM **CHECKED BY** MZ
AT END OF DRILLING --- NA
NOTES Drill rig: Diedrich D-50 ATV
AFTER DRILLING --- NA

DEPTH (ft)	GRAPHIC LOG	MATERIAL DESCRIPTION	SAMPLE TYPE NUMBER	RECOVERY (%)	BLOW COUNTS (N VALUE)	UNCONFINED COMPRESSION (tsf)	▲ SPT N VALUE 20 40 60 80 / ● Moisture Content 10 20 30 40 / ☐ Unconfined Compression (tsf) 2 4 6 8
0		8.5 inches of Asphalt 8.5 inches of Concrete Hydrovac					
10		Blind drill 10 to 13.5 feet for casing setup					
15		FILL: SILT with sand, trace gravel - Brown and Gray - Moist	SS 6	28	7-7-5 (12)		
20		SILTY CLAY, trace gravel (CL/ML) - Gray - Very Soft to Soft - Moist to Very Moist	SS 7	100	0-0-0 (0)	0.25	
			SS 8	100	0-0-0 (0)	0.25	
			SS 9	100	0-0-0 (0)	0.25	
25		Vane Shear @25.0' Shear Strength = 0.36 tsf Remolded = 0.17 tsf	SS 11	100	0-0-0 (0)	0.25	
30			SS 12	100	0-0-0 (0)	0.25	
35		Vane Shear @32.0' Shear Strength = 0.78 tsf Remolded = 0.31 tsf	SS 13	100	0-1-2 (3)	0.25	

(Continued Next Page)

BORING NUMBER B-05

PAGE 2 OF 4

GSG CONSULTANTS, INC.
735 Remington Road, Schaumburg, IL 60173
Tel: 630.996.2600, www.gsg-consultants.com

CLIENT Transystem
PROJECT NAME CTA State-Lake Station
PROJECT NUMBER 20-1038
PROJECT LOCATION Lake St. at State St., Chicago

DEPTH (ft)	GRAPHIC LOG	MATERIAL DESCRIPTION	SAMPLE TYPE NUMBER	RECOVERY (%)	BLOW COUNTS (N VALUE)	UNCONFINED COMPRESSION (tsf)	▲ SPT N VALUE 20 40 60 80 / ● Moisture Content 10 20 30 40 / ☐ Unconfined Compression (tsf) 2 4 6 8
35		SILTY CLAY, trace gravel (CL/ML) - Gray - Very Soft to Soft - Moist to Very Moist *(continued)*					
40		Clayey gravel seam at 39.5 to 40 feet	SS 14	89	5-3-3 (6)	0.25	
45		Vane Shear @42.0' Shear Strength = 0.78 tsf Remolded = 0.34 tsf	SS 15	100	0-0-0 (0)	0.25	
50		SILTY CLAY, trace gravel (CL/ML) - Gray - Stiff to Hard - Moist	SS 16	100	1-3-4 (7)	1.67	
55			SS 17	89	3-5-6 (11)	2.08	
60			SS 18	100	3-4-5 (9)	2.08	
65			SS 19	100	3-5-6 (11)	2.08	
70			SS 20	56	5-9-11 (20)	3.54	
75			SS 21	100	7-8-10 (18)	2.50	

(Continued Next Page)

NOTES:

1. FOR LOCATIONS OF BORINGS IN PLAN VIEW, SEE FOUNDATION LAYOUT ON SHEET S-101

DESIGN BY:	WJC									
DRAWN BY:	NRH	4	7/3/2023	ISSUED FOR BID						
CHECKED BY:	MDS	1	11/4/2022	PERMIT REVISION #1						
APPROVED BY:	WJC	0	9/9/2022	ISSUED FOR PERMIT						
CDOT/APPROVED BY:		NO.	DATE	REVISIONS	DES.	DRW.	CHK.	DCCO	CDOT	

TRANSYSTEMS
222 SOUTH RIVERSIDE PLAZA SUITE 610
CHICAGO, ILLINOIS 60606

SKIDMORE, OWINGS & MERRILL LLP
224 SOUTH MICHIGAN AVENUE, SUITE 1000
CHICAGO, ILLINOIS 60604

CHICAGO DEPARTMENT OF TRANSPORTATION
DIVISION OF ENGINEERING

STATE / LAKE LOOP ELEVATED STATION
200 NORTH STATE STREET, CHICAGO, IL 60601

BORING LOGS 6

CDOT PROJECT D-1-209 | DATE: 9/9/2022

SPEC. NO.

DRAWING NO. B-006

REVISION NO.

GEOTECH BH PLOTS - GINT STD US GDT - 12/2/21 11:35 - T:\TRANSYSTEMS\CDOT STATE LAKE CTA STATION\GEOTECH\NCA\FIELD DATA\CTA STATE LAKE.GPJ

BORING NUMBER B-05
PAGE 3 OF 4

GSG CONSULTANTS, INC.
735 Remington Road, Schaumburg, IL 60173
Tel: 630.994.2600, www.gsg-consultants.com

CLIENT Transystem **PROJECT NAME** CTA State-Lake Station
PROJECT NUMBER 20-1038 **PROJECT LOCATION** Lake St. at State St., Chicago

DEPTH (ft)	GRAPHIC LOG	MATERIAL DESCRIPTION	SAMPLE TYPE NUMBER	RECOVERY (%)	BLOW COUNTS (N VALUE)	UNCONFINED COMPRESSION (tsf)	▲ SPT N VALUE 20 40 60 80 / ● Moisture Content 10 20 30 40 / □ Unconfined Compression (tsf) 2 4 6 8
75		SILTY CLAY, trace gravel (CL/ML) - Gray - Stiff to Hard - Moist *(continued)*					
80		SILTY CLAY with sand and gravel (CL/ML) - Gray - Hard - Moist	SS 22	100	7-7-7 (14)	2.29	
85			SS 23	100	21-23-30 (53)	4.5	
90			SS 24	83	50	4.5	
95			SS 25	73	32-46-50/3"	4.5	>>
100			SS 26	50	50/4"	4.5	>>
105			SS 27	100	48-50/5"	4.5	>>
110			SS 28	100	50/2"	4.5	>>
115		LIMESTONE Fragments					

(Continued Next Page)

GEOTECH BH PLOTS - GINT STD US.GDT - 12/2/21 11:35 - T:\TRANSYSTEMS\CDOT STATE-LAKE CTA STATION\GEOTECH\NCA\FIELD DATA\CTA STATE-LAKE.GPJ

BORING NUMBER B-05
PAGE 4 OF 4

GSG CONSULTANTS, INC.
735 Remington Road, Schaumburg, IL 60173
Tel: 630.994.2600, www.gsg-consultants.com

CLIENT Transystem **PROJECT NAME** CTA State-Lake Station
PROJECT NUMBER 20-1038 **PROJECT LOCATION** Lake St. at State St., Chicago

DEPTH (ft)	GRAPHIC LOG	MATERIAL DESCRIPTION	SAMPLE TYPE NUMBER	RECOVERY (%)	BLOW COUNTS (N VALUE)	UNCONFINED COMPRESSION (tsf)	▲ SPT N VALUE 20 40 60 80 / ● Moisture Content 10 20 30 40 / □ Unconfined Compression (tsf) 2 4 6 8
115		LIMESTONE Fragments *(continued)*					
120		LIMESTONE - Gray - Highly Weathered					
		Auger refusal at 121 feet					

Bottom of borehole at 121.0 feet.

GEOTECH BH PLOTS - GINT STD US.GDT - 12/2/21 11:36 - T:\TRANSYSTEMS\CDOT STATE-LAKE CTA STATION\GEOTECH\NCA\FIELD DATA\CTA STATE-LAKE.GPJ

BORING NUMBER B-06
PAGE 1 OF 4

GSG CONSULTANTS, INC.
735 Remington Road, Schaumburg, IL 60173
Tel: 630.994.2600, www.gsg-consultants.com

CLIENT Transystem **PROJECT NAME** CTA State-Lake Station
PROJECT NUMBER 20-1038 **PROJECT LOCATION** Lake St. at State St., Chicago
DATE STARTED 11/8/21 **COMPLETED** 11/10/21 **GROUND ELEVATION** 14.40 ft CCD **HOLE SIZE** 3 1/4
DRILLING CONTRACTOR GSG Drilling **GROUND WATER LEVELS:**
DRILLING METHOD Mud Rotary **AT TIME OF DRILLING** --- None
LOGGED BY DM **CHECKED BY** MZ **AT END OF DRILLING** --- NA
NOTES Drill rig: Diedrich D-50 TM **AFTER DRILLING** --- NA

DEPTH (ft)	GRAPHIC LOG	MATERIAL DESCRIPTION	SAMPLE TYPE NUMBER	RECOVERY (%)	BLOW COUNTS (N VALUE)	UNCONFINED COMPRESSION (tsf)	▲ SPT N VALUE 20 40 50 80 / ● Moisture Content 10 20 30 40 / □ Unconfined Compression (tsf) 2 4 6 8
0		9 inches of Concrete					
		Hydrovac					
5							
10		FILL: Gravel- Gray- Moist					
15		FILL: SILT, trace sand and gravel- Brown and Gray- Moist	SS 6	44	13-3-9 (12)	0.75	
		SILTY CLAY, trace gravel (CL/ML)- Gray- Medium Stiff to Very Stiff - Moist to Very Moist	SS 7	100	3-3-4 (7)	2.92	
			SS 8	72	2-2-3 (5)	1.25	
20			SS 9	100	0-0-0 (0)	0.5	
		SILTY CLAY, trace gravel (CL/ML)- Gray- Very Soft to Soft - Moist to Very Moist	SS 10	100	0-0-0 (0)	0.25	
25			SS 11	67	0-0-0 (0)	0.25	
30			SS 12	100	0-0-0 (0)	0.25	
35			SS 13	100	0-0-0 (0)	0.25	

(Continued Next Page)

GEOTECH BH PLOTS - GINT STD US.GDT - 12/2/21 11:35 - T:\TRANSYSTEMS\CDOT STATE-LAKE CTA STATION\GEOTECH\NCA\FIELD DATA\CTA STATE-LAKE.GPJ

NOTES:

1. FOR LOCATIONS OF BORINGS IN PLAN VIEW, SEE FOUNDATION LAYOUT ON SHEET S-101

DESIGN BY:	WJC									
DRAWN BY:	NRH	4	7/3/2023	ISSUED FOR BID						
CHECKED BY:	MDS	1	11/4/2022	PERMIT REVISION #1						
APPROVED BY:	WJC	0	9/9/2022	ISSUED FOR PERMIT						
CDOT/APPROVED BY:		NO.	DATE	REVISIONS	DES.	DRW.	CHK.	DCCO	CDOT	

TRANSYSTEMS
222 SOUTH RIVERSIDE PLAZA SUITE 610
CHICAGO, ILLINOIS 60606

SKIDMORE, OWINGS & MERRILL LLP
224 SOUTH MICHIGAN AVENUE, SUITE 1000
CHICAGO, ILLINOIS 60604

CHICAGO DEPARTMENT OF TRANSPORTATION
DIVISION OF ENGINEERING

STATE / LAKE LOOP ELEVATED STATION
200 NORTH STATE STREET, CHICAGO, IL 60601

BORING LOGS 7

CDOT PROJECT D-1-209 | DATE: 9/9/2022

SPEC. NO.

DRAWING NO. B-007

REVISION NO.

BORING NUMBER B-06

PAGE 2 OF 4

GSG CONSULTANTS, INC.
735 Remington Road, Schaumburg, IL 60173
Tel: 630.994.3600, www.gsg-consultants.com

CLIENT Transystem **PROJECT NAME** CTA State-Lake Station
PROJECT NUMBER 20-1038 **PROJECT LOCATION** Lake St. at State St., Chicago

DEPTH (ft)	GRAPHIC LOG	MATERIAL DESCRIPTION	SAMPLE TYPE NUMBER	RECOVERY (%)	BLOW COUNTS (N VALUE)	UNCONFINED COMPRESSION (tsf)	▲ SPT N VALUE 20 40 60 80 / ● Moisture Content 10 20 30 40 / □ Unconfined Compression (tsf) 2 4 6 8
35		SILTY CLAY, trace gravel (CL/ML)- Gray- Very Soft to Soft - Moist to Very Moist *(continued)*					
40			SS 14	100	0-0-0 (0)	0.25	
45			SS 15	89	0-0-0 (0)	0.25	
50			SS 16	100	0-0-0 (0)	0.25	
55		SILTY CLAY, trace gravel (CL/ML)- Gray- Very Stiff to Hard- Moist	SS 17	100	3-3-4 (7)	2.08	
60			SS 18	100	3-4-5 (9)	2.50	
65			SS 19	100	4-5-8 (13)	3.33	
70			SS 20	100	2-4-5 (9)	3.33	
75			SS 21	100	4-6-6 (12)	3.12	

(Continued Next Page)

GEOTECH BH PLOTS - GINT STD US.GDT - 12/2/21 11:35 - T:\TRANSYSTEMS\CDOT STATE-LAKE CTA STATION\GEOTECH\NCA\FIELD DATA\CTA STATE-LAKE.GPJ

BORING NUMBER B-06

PAGE 3 OF 4

GSG CONSULTANTS, INC.
735 Remington Road, Schaumburg, IL 60173
Tel: 630.994.3600, www.gsg-consultants.com

CLIENT Transystem **PROJECT NAME** CTA State-Lake Station
PROJECT NUMBER 20-1038 **PROJECT LOCATION** Lake St. at State St., Chicago

DEPTH (ft)	GRAPHIC LOG	MATERIAL DESCRIPTION	SAMPLE TYPE NUMBER	RECOVERY (%)	BLOW COUNTS (N VALUE)	UNCONFINED COMPRESSION (tsf)	▲ SPT N VALUE 20 40 60 80 / ● Moisture Content 10 20 30 40 / □ Unconfined Compression (tsf) 2 4 6 8
75		SILTY CLAY, trace gravel (CL/ML)- Gray- Very Stiff to Hard- Moist *(continued)*					
80		SILTY CLAY with sand and gravel (CL/ML)- Gray- Very Stiff to Hard- Moist	SS 22	100	5-5-12 (17)	3.0	
85			SS 23	89	13-30-24 (54)	4.5	
90			SS 24	100	50	4.5	
95			SS 25	100	50/5"	4.5	>>
100			SS 26	100	50/4"	4.5	>>
105			SS 27	100	50/4"	4.5	>>
110			SS 28	50	50/4"	4.5	>>
115			SS 29	100	50/4"	4.5	>>

(Continued Next Page)

GEOTECH BH PLOTS - GINT STD US.GDT - 12/2/21 11:35 - T:\TRANSYSTEMS\CDOT STATE-LAKE CTA STATION\GEOTECH\NCA\FIELD DATA\CTA STATE-LAKE.GPJ

BORING NUMBER B-06

PAGE 4 OF 4

GSG CONSULTANTS, INC.
735 Remington Road, Schaumburg, IL 60173
Tel: 630.994.3600, www.gsg-consultants.com

CLIENT Transystem **PROJECT NAME** CTA State-Lake Station
PROJECT NUMBER 20-1038 **PROJECT LOCATION** Lake St. at State St., Chicago

DEPTH (ft)	GRAPHIC LOG	MATERIAL DESCRIPTION	SAMPLE TYPE NUMBER	RECOVERY (%)	BLOW COUNTS (N VALUE)	UNCONFINED COMPRESSION (tsf)	▲ SPT N VALUE 20 40 60 80 / ● Moisture Content 10 20 30 40 / □ Unconfined Compression (tsf) 2 4 6 8
115		SILTY CLAY with sand and gravel (CL/ML)- Gray- Very Stiff to Hard- Moist *(continued)*					
120		LIMESTONE- Gray- Weathered Auger refusal at 121 feet					
125		LIMESTONE- Gray- Weathered, lightly fractured, Vuggy Run 1: 121 to 131 feet Recovery: 100% RQD: 85.4% (Good)	RC 1	100 (85)		563	
130						510	

Bottom of borehole at 131.0 feet.

GEOTECH BH PLOTS - GINT STD US.GDT - 12/2/21 11:35 - T:\TRANSYSTEMS\CDOT STATE-LAKE CTA STATION\GEOTECH\NCA\FIELD DATA\CTA STATE-LAKE.GPJ

NOTES:

1. FOR LOCATIONS OF BORINGS IN PLAN VIEW, SEE FOUNDATION LAYOUT ON SHEET S-101

DESIGN BY:	WJC									
DRAWN BY:	NRH	4	7/3/2023	ISSUED FOR BID						
CHECKED BY:	MDS	1	11/4/2022	PERMIT REVISION #1						
APPROVED BY:	WJC	0	9/9/2022	ISSUED FOR PERMIT						
CDOT/APPROVED BY:		NO.	DATE	REVISIONS	DES.	DRW.	CHK.	DCCO	CDOT	

TRANSYSTEMS
222 SOUTH RIVERSIDE PLAZA SUITE 610
CHICAGO, ILLINOIS 60606

SKIDMORE, OWINGS & MERRILL LLP
224 SOUTH MICHIGAN AVENUE, SUITE 1000
CHICAGO, ILLINOIS 60604

CHICAGO DEPARTMENT OF TRANSPORTATION
DIVISION OF ENGINEERING

STATE / LAKE LOOP ELEVATED STATION
200 NORTH STATE STREET, CHICAGO, IL 60601

BORING LOGS 8

CDOT PROJECT D-1-209 | DATE: 9/9/2022

SPEC. NO.

DRAWING NO. B-008

REVISION NO.

BORING NUMBER B-08
PAGE 1 OF 4

GSG CONSULTANTS, INC.
735 Remington Road, Schaumburg, IL 60173
Tel: 630.996.2600, www.gsg-consultants.com

CLIENT Transystem
PROJECT NUMBER 20-1038
DATE STARTED 11/11/21 **COMPLETED** 11/12/21
DRILLING CONTRACTOR GSG Drilling
DRILLING METHOD Mud Rotary
LOGGED BY JEB **CHECKED BY** MZ
NOTES Drill rig: CME

PROJECT NAME CTA State-Lake Station
PROJECT LOCATION Lake St. at State St., Chicago
GROUND ELEVATION 14.50 ft CCD **HOLE SIZE** 3 1/4
GROUND WATER LEVELS:
AT TIME OF DRILLING --- None
AT END OF DRILLING --- NA
AFTER DRILLING --- NA

DEPTH (ft)	GRAPHIC LOG	MATERIAL DESCRIPTION	SAMPLE TYPE NUMBER	RECOVERY (%)	BLOW COUNTS (N VALUE)	UNCONFINED COMPRESSION (tsf)
0		10.5 inches of Asphalt 6.5 inches of Granite Paver Hydrovac				
10		FILL: SAND with GRAVEL - Brown - Moist				
15		SILTY CLAY, trace gravel (CL/ML) - Gray - Stiff - Moist	SS 6		3-3-4 (7)	
		SILTY CLAY with sand and gravel (CL/ML) - Gray - very soft to soft - Moist to Very Moist	SS 7	100	0-0-0 (0)	0.5
20			SS 8	39	0-0-0 (0)	0.25
			SS 9	100	0-0-0 (0)	0.25
25		Vane Shear @25.0' Shear Strength = 0.58 tsf Remolded = 0.22 tsf	SS 11	100	0-0-0 (0)	0.25
30			SS 12	100	0-0-0 (0)	0.5
		Vane Shear @32.0' Shear Strength = 0.43 tsf Remolded = 0.25 tsf	SS 13	100	0-0-0 (0)	0.25
35						

▲ SPT N VALUE (20 40 60 80)
● Moisture Content (10 20 30 40)
☐ Unconfined Compression (tsf) (2 4 6 8)

(Continued Next Page)

GEOTECH BH PLOTS - GINT STD US.GDT - 12/2/21 11:35 - T:\TRANSYSTEMS\CDOT STATE LAKE CTA STATION\GEOTECH\NCA\FIELD DATA\CTA STATE LAKE.GPJ

BORING NUMBER B-08
PAGE 2 OF 4

GSG CONSULTANTS, INC.
735 Remington Road, Schaumburg, IL 60173
Tel: 630.996.2600, www.gsg-consultants.com

CLIENT Transystem
PROJECT NUMBER 20-1038

PROJECT NAME CTA State-Lake Station
PROJECT LOCATION Lake St. at State St., Chicago

DEPTH (ft)	GRAPHIC LOG	MATERIAL DESCRIPTION	SAMPLE TYPE NUMBER	RECOVERY (%)	BLOW COUNTS (N VALUE)	UNCONFINED COMPRESSION (tsf)
35		SILTY CLAY with sand and gravel (CL/ML) - Gray - very soft to soft - Moist to Very Moist *(continued)*				
40			SS 14	100	0-0-0 (0)	0.25
		Vane Shear @42.0' Shear Strength = 0.39 tsf Remolded = 0.21 tsf				
45			SS 15	100	0-0-0 (0)	0.25
50			SS 16	100	0-0-0 (0)	0.25
55		SILTY CLAY, trace gravel (CL/ML) - Gray - Very Stiff to Hard - Moist	SS 17	100	0-0-1 (1)	0.25
60		6 inches of clayey gravel seam at 58.5 feet	SS 18	67	3-5-7 (12)	1.67
65			SS 19	78	5-7-9 (16)	2.5
70			SS 20	100	6-10-13 (23)	4.58
75			SS 21	100	7-10-16 (26)	4.17

▲ SPT N VALUE (20 40 60 80)
● Moisture Content (10 20 30 40)
☐ Unconfined Compression (tsf) (2 4 6 8)

(Continued Next Page)

GEOTECH BH PLOTS - GINT STD US.GDT - 12/2/21 11:35 - T:\TRANSYSTEMS\CDOT STATE LAKE CTA STATION\GEOTECH\NCA\FIELD DATA\CTA STATE LAKE.GPJ

BORING NUMBER B-08
PAGE 3 OF 4

GSG CONSULTANTS, INC.
735 Remington Road, Schaumburg, IL 60173
Tel: 630.996.2600, www.gsg-consultants.com

CLIENT Transystem
PROJECT NUMBER 20-1038

PROJECT NAME CTA State-Lake Station
PROJECT LOCATION Lake St. at State St., Chicago

DEPTH (ft)	GRAPHIC LOG	MATERIAL DESCRIPTION	SAMPLE TYPE NUMBER	RECOVERY (%)	BLOW COUNTS (N VALUE)	UNCONFINED COMPRESSION (tsf)
75		SILTY CLAY, trace gravel (CL/ML) - Gray - Very Stiff to Hard - Moist *(continued)*				
80			SS 22	100	5-7-8 (15)	2.08
85			SS 23	100	12-14-18 (32)	4.58
90		SILTY CLAY with sand and gravel (CL/ML) - Gray - Hard - Moist 2 inches of sand seam at 89 feet	SS 24	100	37-50/1"	4.5 >>
95			SS 25	50	50/4"	4.5 >>
100			SS 26	100	50/2"	4.5 >>
105		Limestone fragments at 103.5 feet	SS 27	50	50/3"	4.5 >>
110			SS 28	33	50/3"	4.5 >>
115			SS 29	10	50/5"	>>

▲ SPT N VALUE (20 40 60 80)
● Moisture Content (10 20 30 40)
☐ Unconfined Compression (tsf) (2 4 6 8)

(Continued Next Page)

GEOTECH BH PLOTS - GINT STD US.GDT - 12/2/21 11:35 - T:\TRANSYSTEMS\CDOT STATE LAKE CTA STATION\GEOTECH\NCA\FIELD DATA\CTA STATE LAKE.GPJ

NOTES:

1. FOR LOCATIONS OF BORINGS IN PLAN VIEW, SEE FOUNDATION LAYOUT ON SHEET S-101

DESIGN BY:	WJC									
DRAWN BY:	NRH	4	7/3/2023	ISSUED FOR BID						
CHECKED BY:	MDS	1	11/4/2022	PERMIT REVISION #1						
APPROVED BY:	WJC	0	9/9/2022	ISSUED FOR PERMIT						
CDOT/APPROVED BY:		NO.	DATE	REVISIONS	DES.	DRW.	CHK.	DCCO	CDOT	

TRANSYSTEMS
222 SOUTH RIVERSIDE PLAZA SUITE 610
CHICAGO, ILLINOIS 60606

SKIDMORE, OWINGS & MERRILL LLP
224 SOUTH MICHIGAN AVENUE, SUITE 1000
CHICAGO, ILLINOIS 60604

CHICAGO DEPARTMENT OF TRANSPORTATION
DIVISION OF ENGINEERING

STATE / LAKE LOOP ELEVATED STATION
200 NORTH STATE STREET, CHICAGO, IL 60601

BORING LOGS 9

CDOT PROJECT D-1-209 | DATE: 9/9/2022

SPEC. NO.

DRAWING NO. B-009

REVISION NO.

BORING NUMBER B-08

PAGE 4 OF 4

GSG CONSULTANTS, INC.
735 Remington Road, Schaumburg, IL 60173
Tel: 630.994.3600, www.gsg-consultants.com

CLIENT Transystem **PROJECT NAME** CTA State-Lake Station
PROJECT NUMBER 20-1038 **PROJECT LOCATION** Lake St. at State St., Chicago

DEPTH (ft)	GRAPHIC LOG	MATERIAL DESCRIPTION	SAMPLE TYPE NUMBER	RECOVERY (%)	BLOW COUNTS (N VALUE)	UNCONFINED COMPRESSION (tsf)	▲ SPT N VALUE 20 40 60 80 / ● Moisture Content 10 20 30 40 / ☐ Unconfined Compression (tsf) 2 4 6 8
115		CLAYEY GRAVEL (GC) - Gray - Moist					
		Auger refusal at 119 feet *(continued)*					
		Bottom of borehole at 119.0 feet.					

GEOTECH BH PLOTS - GINT STD US.GDT - 12/2/21 11:35 - T:\TRANSYSTEMS\CDOT STATE LAKE CTA STATION\GEOTECH\NCA\FIELD DATA\CTA STATE LAKE.GPJ

BORING NUMBER B-09

PAGE 1 OF 4

GSG CONSULTANTS, INC.
735 Remington Road, Schaumburg, IL 60173
Tel: 630.994.3600, www.gsg-consultants.com

CLIENT Transystem **PROJECT NAME** CTA State-Lake Station
PROJECT NUMBER 20-1038 **PROJECT LOCATION** Lake St. at State St., Chicago
DATE STARTED 11/12/21 **COMPLETED** 11/12/21 **GROUND ELEVATION** 15.00 ft CCD **HOLE SIZE** 3 1/4
DRILLING CONTRACTOR GSG Drilling **GROUND WATER LEVELS:**
DRILLING METHOD Mud Rotary **AT TIME OF DRILLING** --- None
LOGGED BY JB **CHECKED BY** MZ **AT END OF DRILLING** --- NA
NOTES Drill rig: Diedrich D-50 ATV **AFTER DRILLING** --- NA

DEPTH (ft)	GRAPHIC LOG	MATERIAL DESCRIPTION	SAMPLE TYPE NUMBER	RECOVERY (%)	BLOW COUNTS (N VALUE)	UNCONFINED COMPRESSION (tsf)	▲ SPT N VALUE 20 40 60 80 / ● Moisture Content 10 20 30 40 / ☐ Unconfined Compression (tsf) 2 4 6 8
0		6.5 inches of Concrete					
		Hydrovac					
10		FILL: GRAVEL (GP) - Gray - Moist					
15		SILTY CLAY, trace gravel (CL-ML) - Gray - Stiff - Moist to Very Moist	SS 6	89	0-3-3 (6)	1.25	▲ ● ☐
20		SILTY CLAY, trace gravel (CL-ML) - Gray - Very Soft to Soft - Moist to Very Moist	SS 7	100	0-0-0 (0)	0.5	▲ ● ☐
			SS 8	100	0-0-0 (0)	0.25	▲ ● ☐
25			SS 9	100	0-0-0 (0)	0.25	▲ ● ☐
		Vane Shear @25.0' Shear Strength = 0.41 tsf Remolded = 0.17 tsf	SS 11	50	0-0-0 (0)	0.25	▲ ● ☐
30			SS 12	100	0-0-0 (0)	0.25	▲ ● ☐
35		Vane Shear @32.0' Shear Strength = 0.39 tsf Remolded = 0.18 tsf	SS 13	100	0-0-0 (0)	0.25	▲ ● ☐

(Continued Next Page)

GEOTECH BH PLOTS - GINT STD US.GDT - 12/2/21 11:35 - T:\TRANSYSTEMS\CDOT STATE LAKE CTA STATION\GEOTECH\NCA\FIELD DATA\CTA STATE LAKE.GPJ

BORING NUMBER B-09

PAGE 2 OF 4

GSG CONSULTANTS, INC.
735 Remington Road, Schaumburg, IL 60173
Tel: 630.994.3600, www.gsg-consultants.com

CLIENT Transystem **PROJECT NAME** CTA State-Lake Station
PROJECT NUMBER 20-1038 **PROJECT LOCATION** Lake St. at State St., Chicago

DEPTH (ft)	GRAPHIC LOG	MATERIAL DESCRIPTION	SAMPLE TYPE NUMBER	RECOVERY (%)	BLOW COUNTS (N VALUE)	UNCONFINED COMPRESSION (tsf)	▲ SPT N VALUE 20 40 60 80 / ● Moisture Content 10 20 30 40 / ☐ Unconfined Compression (tsf) 2 4 6 8
35		SILTY CLAY, trace gravel (CL-ML) - Gray - Very Soft to Soft - Moist to Very Moist *(continued)*					
40			SS 14	89	0-0-0 (0)	0.5	▲ ● ☐
45		Vane Shear @42.0' Shear Strength = 0.43 tsf Remolded = 0.22 tsf	SS 15	89	0-0-0 (0)	0.25	▲ ● ☐
50			SS 16	94	0-0-0 (0)	0.5	▲ ● ☐
		SILTY CLAY, trace sand (CL-ML) - Gray - Stiff to Hard - Moist					
55			SS 17	89	3-4-5 (9)	1.46	▲ ● ☐
60			SS 18	100	4-4-7 (11)	1.67	▲ ● ☐
65			SS 19	100	4-5-9 (14)	2.92	▲ ● ☐
70			SS 20	83	3-6-7 (13)	2.50	▲ ● ☐
75			SS 21	89	5-9-9 (18)	3.33	▲ ● ☐

(Continued Next Page)

GEOTECH BH PLOTS - GINT STD US.GDT - 12/2/21 11:35 - T:\TRANSYSTEMS\CDOT STATE LAKE CTA STATION\GEOTECH\NCA\FIELD DATA\CTA STATE LAKE.GPJ

NOTES:

1. FOR LOCATIONS OF BORINGS IN PLAN VIEW, SEE FOUNDATION LAYOUT ON SHEET S-101

DESIGN BY:	WJC									
DRAWN BY:	NRH	4	7/3/2023	ISSUED FOR BID						
CHECKED BY:	MDS	1	11/4/2022	PERMIT REVISION #1						
APPROVED BY:	WJC	0	9/9/2022	ISSUED FOR PERMIT						
CDOT/APPROVED BY:		NO.	DATE	REVISIONS	DES.	DRW.	CHK.	DCCO	CDOT	

TRANSYSTEMS
222 SOUTH RIVERSIDE PLAZA SUITE 610
CHICAGO, ILLINOIS 60606

SKIDMORE, OWINGS & MERRILL LLP
224 SOUTH MICHIGAN AVENUE, SUITE 1000
CHICAGO, ILLINOIS 60604

CHICAGO DEPARTMENT OF TRANSPORTATION
DIVISION OF ENGINEERING

STATE / LAKE LOOP ELEVATED STATION
200 NORTH STATE STREET, CHICAGO, IL 60601

BORING LOGS 10

CDOT PROJECT D-1-209 | DATE: 9/9/2022

SPEC. NO.

DRAWING NO. B-010

REVISION NO.

BORING NUMBER B-09
PAGE 3 OF 4

GSG CONSULTANTS, INC.
735 Remington Road, Schaumburg, IL 60173
Tel: 630.994.2600, www.gsg-consultants.com

CLIENT Transystem **PROJECT NAME** CTA State-Lake Station
PROJECT NUMBER 20-1038 **PROJECT LOCATION** Lake St. at State St., Chicago

DEPTH (ft)	GRAPHIC LOG	MATERIAL DESCRIPTION	SAMPLE TYPE NUMBER	RECOVERY (%)	BLOW COUNTS (N VALUE)	UNCONFINED COMPRESSION (tsf)	▲ SPT N VALUE 20 40 60 80 / ● Moisture Content 10 20 30 40 / □ Unconfined Compression (tsf) 2 4 6 8
75		SILTY CLAY, trace sand (CL-ML) - Gray - Stiff to Hard - Moist *(continued)*					
80		SILTY CLAY with sand, trace gravel (CL-ML) - Gray - Hard - Moist	SS 22	83	9-9-14 (23)	4.0	
85			SS 23	100	12-15-20 (35)	4.5	
90			SS 24	100	40-50	4.5	
95			SS 25	100	50	4.5	
100		Rock Fragments at 98 to 103 feet	SS 26	33	50/3"		>>
105			SS 27	200	50/1"	4.5	>>
110			SS 28	100	50/5"	4.5	>>
115			SS 29	78	25-25-32 (57)	4.5	

(Continued Next Page)

GEOTECH BH PLOTS - GINT STD US.GDT - 12/2/21 11:35 - T:\TRANSYSTEMS\CDOT STATE-LAKE CTA STATION\GEOTECH\NCA\FIELD DATA\CTA STATE-LAKE.GPJ

BORING NUMBER B-09
PAGE 4 OF 4

GSG CONSULTANTS, INC.
735 Remington Road, Schaumburg, IL 60173
Tel: 630.994.2600, www.gsg-consultants.com

CLIENT Transystem **PROJECT NAME** CTA State-Lake Station
PROJECT NUMBER 20-1038 **PROJECT LOCATION** Lake St. at State St., Chicago

DEPTH (ft)	GRAPHIC LOG	MATERIAL DESCRIPTION	SAMPLE TYPE NUMBER	RECOVERY (%)	BLOW COUNTS (N VALUE)	UNCONFINED COMPRESSION (tsf)	▲ SPT N VALUE 20 40 60 80 / ● Moisture Content 10 20 30 40 / □ Unconfined Compression (tsf) 2 4 6 8
115		SILTY CLAY with sand, trace gravel (CL-ML) - Gray - Hard - Moist *(continued)*					
120		LIMESTONE - Gray - Highly weathered Auger refusal at 121 feet					
125		LIMESTONE - Gray - Lighlty Fractured, Weathered, Vuggy Run 1: 121 to 131 feet Recovery: 98.8% RQD: 97.3% (Excellent)	RC 1	99 (97)		937	
130						564	

Bottom of borehole at 131.0 feet.

GEOTECH BH PLOTS - GINT STD US.GDT - 12/2/21 11:36 - T:\TRANSYSTEMS\CDOT STATE-LAKE CTA STATION\GEOTECH\NCA\FIELD DATA\CTA STATE-LAKE.GPJ

BORING NUMBER B-10
PAGE 1 OF 4

GSG CONSULTANTS, INC.
735 Remington Road, Schaumburg, IL 60173
Tel: 630.994.2600, www.gsg-consultants.com

CLIENT Transystem **PROJECT NAME** CTA State-Lake Station
PROJECT NUMBER 20-1038 **PROJECT LOCATION** Lake St. at State St., Chicago
DATE STARTED 11/9/21 **COMPLETED** 11/10/21 **GROUND ELEVATION** 14.10 ft CCD **HOLE SIZE** 3 1/4
DRILLING CONTRACTOR GSG Drilling **GROUND WATER LEVELS:**
DRILLING METHOD Mud Rotary **AT TIME OF DRILLING** --- None
LOGGED BY JEB **CHECKED BY** MZ **AT END OF DRILLING** --- NA
NOTES Drill rig: CME **AFTER DRILLING** --- NA

DEPTH (ft)	GRAPHIC LOG	MATERIAL DESCRIPTION	SAMPLE TYPE NUMBER	RECOVERY (%)	BLOW COUNTS (N VALUE)	UNCONFINED COMPRESSION (tsf)	▲ SPT N VALUE 20 40 50 80 / ● Moisture Content 10 20 30 40 / □ Unconfined Compression (tsf) 2 4 6 8
0		11 inches of Concrete					
5		Hydrovac Bricks at 1 to 10 feet					
10		FILL: SAND with GRAVEL- Brown- Moist					
15		FILL: SILTY CLAY, with woods - Gray - Very Moist	SS 6	100	1-1-1 (2)	1.46	
		SILTY CLAY (CL/ML), Gray - Medium Stiff -Very Moist	SS 7	100	1-1-1 (2)	0.5	
20		SILTY CLAY (CL/ML) - Gray- Very Soft to Soft - Moist to Very Moist	SS 8	100	0-1-1 (2)	0.5	
		2 inches of gravel Seam at 21.5 feet	SS 9	100	2-2-4 (6)	0	
25		Vane Shear @25.0' Shear Strength = 0.78 tsf Remolded = 0.45 tsf	SS 11	100	0-2-2 (4)	0.5	
30		4 inches of gravel Seam at 29 feet	SS 12	78	0-1-2 (3)	0	
		Vane Shear @32.0' Shear Strength = 0.62 tsf Remolded = 0.43 tsf	SS 13	100	0-0-1 (1)	0	
35							

(Continued Next Page)

NOTES:

1. FOR LOCATIONS OF BORINGS IN PLAN VIEW, SEE FOUNDATION LAYOUT ON SHEET S-101

DESIGN BY:	WJC									
DRAWN BY:	NRH	4	7/3/2023	ISSUED FOR BID						
CHECKED BY:	MDS	1	11/4/2022	PERMIT REVISION #1						
APPROVED BY:	WJC	0	9/9/2022	ISSUED FOR PERMIT						
CDOT/APPROVED BY:		NO.	DATE	REVISIONS	DES.	DRW.	CHK.	DCCO	CDOT	

TRANSYSTEMS
222 SOUTH RIVERSIDE PLAZA SUITE 610
CHICAGO, ILLINOIS 60606

SKIDMORE, OWINGS & MERRILL LLP
224 SOUTH MICHIGAN AVENUE, SUITE 1000
CHICAGO, ILLINOIS 60604

CHICAGO DEPARTMENT OF TRANSPORTATION
DIVISION OF ENGINEERING

STATE / LAKE LOOP ELEVATED STATION
200 NORTH STATE STREET, CHICAGO, IL 60601

BORING LOGS 11

CDOT PROJECT D-1-209 | DATE: 9/9/2022

SPEC. NO.

DRAWING NO. B-011

REVISION NO.

GSG CONSULTANTS, INC.
735 Remington Road, Schaumburg, IL 60173
Tel: 630.994.3600, www.gsg-consultants.com

BORING NUMBER B-10
PAGE 2 OF 4

CLIENT Transystem
PROJECT NAME CTA State-Lake Station
PROJECT NUMBER 20-1038
PROJECT LOCATION Lake St. at State St., Chicago

DEPTH (ft)	GRAPHIC LOG	MATERIAL DESCRIPTION	SAMPLE TYPE NUMBER	RECOVERY (%)	BLOW COUNTS (N VALUE)	UNCONFINED COMPRESSION (tsf)	▲ SPT N VALUE 20 40 60 80 / ● Moisture Content 10 20 30 40 / □ Unconfined Compression (tsf) 2 4 6 8
35		SILTY CLAY (CL/ML) - Gray- Very Soft to Soft - Moist to Very Moist *(continued)*					
40			SS 14	100	0-0-0 (0)	0	
45		Vane Shear @42.0' Shear Strength = 0.45 tsf Remolded = 0.34 tsf	SS 15	100	0-1-1 (2)	0	
50			SS 16	100	0-1-1 (2)	0.5	
55		4 inches of Clayey gravel Seam at 53.5 feet	SS 17	67	0-1-2 (3)	0	
60		SILTY CLAY (CL/ML) - Gray- Stiff to Very Stiff -Moist	SS 18	89	2-2-3 (5)	1.0	
65			SS 19	100	4-6-8 (14)	2.08	
70		Gravel Seam at 68.5 feet	SS 20	100	6-7-8 (15)	2.92	
75			SS 21	100	3-8-14 (22)	2.92	

(Continued Next Page)

GSG CONSULTANTS, INC.
735 Remington Road, Schaumburg, IL 60173
Tel: 630.994.3600, www.gsg-consultants.com

BORING NUMBER B-10
PAGE 3 OF 4

CLIENT Transystem
PROJECT NAME CTA State-Lake Station
PROJECT NUMBER 20-1038
PROJECT LOCATION Lake St. at State St., Chicago

DEPTH (ft)	GRAPHIC LOG	MATERIAL DESCRIPTION	SAMPLE TYPE NUMBER	RECOVERY (%)	BLOW COUNTS (N VALUE)	UNCONFINED COMPRESSION (tsf)	▲ SPT N VALUE 20 40 60 80 / ● Moisture Content 10 20 30 40 / □ Unconfined Compression (tsf) 2 4 6 8
75		SILTY CLAY (CL/ML) - Gray- Stiff to Very Stiff -Moist *(continued)*					
80			SS 22	100	5-7-8 (15)	2.08	
85			SS 23	100	9-13-18 (31)	2.08	
90		SILTY CLAY with sand and gravel (ML)- Gray- Hard -Moist	SS 24	100	50-50/4"	4.5	>>
95			SS 25	100	50/5"	4.5	>>
100			SS 26	0	50/1"		>>
105			SS 27	55	37-50/5"	4.5	>>
110		CLAYEY GRAVEL (GC) - Gray- Extremely Dense - Moist	SS 28	50	50/4"		>>
115			SS 29	100	50/1"		>>

(Continued Next Page)

GSG CONSULTANTS, INC.
735 Remington Road, Schaumburg, IL 60173
Tel: 630.994.3600, www.gsg-consultants.com

BORING NUMBER B-10
PAGE 4 OF 4

CLIENT Transystem
PROJECT NAME CTA State-Lake Station
PROJECT NUMBER 20-1038
PROJECT LOCATION Lake St. at State St., Chicago

DEPTH (ft)	GRAPHIC LOG	MATERIAL DESCRIPTION	SAMPLE TYPE NUMBER	RECOVERY (%)	BLOW COUNTS (N VALUE)	UNCONFINED COMPRESSION (tsf)	▲ SPT N VALUE 20 40 60 80 / ● Moisture Content 10 20 30 40 / □ Unconfined Compression (tsf) 2 4 6 8
115		LIMESTONE- Gray - Highly Weathered Auger refusal at 117.5 feet LIMESTONE - Gray - Vertical Fractures, Weathered, Vuggy Run 1: 117.5 to 127.5 feet Recovery: 99.4% RQD: 66.7% (Fair)	RC 1	99 (67)		673 618	
120							
125		Bottom of borehole at 127.5 feet.					

NOTES:

1. FOR LOCATIONS OF BORINGS IN PLAN VIEW, SEE FOUNDATION LAYOUT ON SHEET S-101

DESIGN BY:	WJC									
DRAWN BY:	NRH	4	7/3/2023	ISSUED FOR BID						
CHECKED BY:	MDS	1	11/4/2022	PERMIT REVISION #1						
APPROVED BY:	WJC	0	9/9/2022	ISSUED FOR PERMIT						
CDOT/APPROVED BY:		NO.	DATE	REVISIONS	DES.	DRW.	CHK.	DCCO	CDOT	

TRANSYSTEMS
222 SOUTH RIVERSIDE PLAZA SUITE 610
CHICAGO, ILLINOIS 60606

SKIDMORE, OWINGS & MERRILL LLP
224 SOUTH MICHIGAN AVENUE, SUITE 1000
CHICAGO, ILLINOIS 60604

CHICAGO DEPARTMENT OF TRANSPORTATION
DIVISION OF ENGINEERING

STATE / LAKE LOOP ELEVATED STATION
200 NORTH STATE STREET, CHICAGO, IL 60601

BORING LOGS 12

CDOT PROJECT D-1-209 | DATE: 9/9/2022

SPEC. NO.

DRAWING NO. B-012

REVISION NO.

CIVIL GENERAL NOTES

1. ANY REFERENCE TO 'STANDARD SPECIFICATIONS' THROUGHOUT THE PLANS OR SPECIAL PROVISIONS MUST BE INTERPRETED TO BE THE ILLINOIS DEPARTMENT OF TRANSPORTATION (IDOT) 'STANDARD SPECIFICATIONS FOR ROAD AND BRIDGE CONSTRUCTION' (SSRBC), ADOPTED JANUARY I, 2022.

2. ALL DIMENSIONS ARE TO FACE OF CURB UNLESS OTHERWISE SPECIFIED.

3. ALL WORK MUST BE DONE IN ACCORDANCE WITH THE 'CHICAGO DEPARTMENT OF TRANSPORTATION, RULES AND REGULATIONS FOR CONSTRUCTION IN THE PUBLIC WAY', LATEST EDITION AND THE CDOT WEBSITE HTTP://WWW.CITYOFCHICAGO.ORG/CITY/EN/DEPTS/CDOT/SUPP INFO/REGULATIONS FOR CONSTRUCTIONINTHEPUBLICWAY.HTML FOR THE CITY OF CHICAGO'S CURRENT ADA STANDARDS.

4. THE CONTRACTOR WILL BE RESPONSIBLE FOR CONTACTING THE CHICAGO UTILITY ALERT NETWORK AT (312) 744-7000 SO THAT UTILITIES AND THEIR APPURTENANCES MAY BE LOCATED AND ADJUSTED OR MOVED, IF NECESSARY, PRIOR TO THE START OF CONSTRUCTION OPERATIONS. THE CONTRACTOR MUST COOPERATE WITH ALL UTILITY OWNERS AS PROVIDED FOR IN THE 'STANDARD SPECIFICATIONS'.

5. THE CONTRACTOR MUST NOTIFY THE POST OFFICE OF ANY MAIL BOX TO BE REMOVED OR RELOCATED. THE COST OF ANY COORDINATION WITH THE POST OFFICE WILL BE CONSIDERED INCIDENTAL TO 'SIDEWALK REMOVAL',

6. THE CONTRACTOR MUST CHECK THE ELEVATION AT THE PROPERTY LINE BEFORE SETTING THE TOP OF CURB ELEVATIONS AND, IF NECESSARY, MUST NOTIFY THE COMMISSIONER OF POTENTIAL CONFLICTS WITH THE CURB EXPOSURE AND/OR GUTTER ELEVATION WITH RESPECT TO ADJACENT PROPERTY LINE ELEVATIONS.

7. THE CONTRACTOR WILL BE RESPONSIBLE FOR IMMEDIATELY NOTIFYING THE COMMISSIONER OF ANY DAMAGE TO CITY OWNED AND MAINTAINED TRAFFIC SIGNS, SIGNS, GUARDRAILS, FENCES, ETC.

8. ONE-HALF INCH THICK EXPANSION JOINTS MUST BE PLACED BETWEEN THE SIDEWALK AND ALL STRUCTURES SUCH AS LIGHT STANDARDS, TRAFFIC LIGHT STANDARDS, AND ALL MANHOLES THAT EXTEND THROUGH THE SIDEWALK, THE EXPANSION JOINTS WILL BE INCLUDED IN THE COST OF CIVIL WORK.

9. THE CONTRACTOR MUST BREAK THE SIDEWALK AROUND LIGHT POLES AND BUFFALO BOXES PRIOR TO THE REMOVAL OF THE SIDEWALK.

10. ALL REMOVED TRAFFIC SIGNALS, POSTS, LIGHT POLES, AND LUMINAIRES MUST BE DELIVERED TO THE DIVISION OF ELECTRICAL OPERATIONS AT 2451 S ASHLAND AVE AS DIRECTED BY THE COMMISSIONER AT NO ADDITIONAL COST.

11. THE CONTRACTOR IS RESPONSIBLE FOR MONITORING ADJACENT BUILDINGS AND THE CTA STRUCTURE FOR DAMAGE AND MOVEMENT THROUGHOUT CONSTRUCTION.

12. THE EXISTING PAVEMENT MUST BE SAWCUT IN ORDER TO PROVIDE FOR A STRAIGHT EDGE BUTT JOINT WHERE COMBINATION CONCRETE CURB AND GUTTER IS TO BE REPLACED, WHERE FULL DEPTH PATCHES ARE TO BE CONSTRUCTED, WHERE TRENCHES FOR PROPOSED DRAINAGE STRUCTURES ARE TO BE EXCAVATED, AND WHERE PAVEMENT IS TO BE RECONSTRUCTED AS SHOWN ON THE PLANS, AND AS DIRECTED BY THE COMMISSIONER. FOR COMBINATION CONCRETE CURB AND GUTTER, THE SAWCUT MUST BE DEEP ENOUGH TO PENETRATE THE EXISTING BASE COURSE WHERE NECESSARY TO ASSURE A STRAIGHT EDGE FOR THE FULL DEPTH OF COMBINATION CONCRETE CURB AND GUTTER. FOR PATCHES AND DRAINAGE STRUCTURES, THE SAWCUT MUST BE FULL DEPTH. ALL OTHER SAWCUTTING MUST BE TO THE DEPTHS SHOWN ON THE PLANS OR GIVEN IN THE SPECIFICATIONS. ALL SAWCUTTING SHOWN ON THE PLANS OR OTHERWISE REQUIRED FOR THIS WORK WILL BE CONSIDERED INCLUDED IN THE COST OF THE ADJACENT REMOVAL ITEM(S). ANY SAWCUTTING REQUIRED THROUGH STREETCAR RAILS OR TIES WILL ALSO BE CONSIDERED INCLUDED IN THE ITEM BEING REMOVED.

13. THE CITY DOES NOT GUARANTEE THE COMPLETENESS OR ACCURACY OF THE INFORMATION SHOWN ON THE PLANS REGARDING UTILITIES, EITHER PUBLIC OR PRIVATE, SUCH AS SEWERS, MANHOLES, PRIVATE DRAINS, CATCH BASINS, GAS AND WATER MAINS, TELEPHONE, FIBER OPTIC, AND ELECTRICAL DUCT LINES AND SIMILAR STRUCTURES. THE CONTRACTOR MUST VERIFY THE EXACT LOCATION OF ALL UTILITIES THAT MAY INTERFERE WITH CONSTRUCTION OPERATIONS AND MUST REPORT TO THE COMMISSIONER ANY OMISSIONS AND DIFFERENCES FROM THE LOCATIONS SHOWN ON THE PLANS. THE COST OF THIS WORK WILL BE CONSIDERED INCLUDED IN THE COST OF THE CONTRACT.

14. THE CONTRACTOR MUST PROTECT EXISTING AND NEW UTILITIES WHEN CONSIDERED NECESSARY BY THE COMMISSIONER, BY METHODS ACCEPTABLE TO THE COMMISSIONER AND HE/SHE MUST BRACE AND SUPPORT THE UTILITIES PROPERLY TO PREVENT SETTLEMENT, DISPLACEMENT, OR CHANGE TO THE UTILITIES.

15. ANY UTILITY THAT IS DAMAGED DURING CONSTRUCTION MUST BE REPAIRED OR REPLACED BY THE CONTRACTOR AT THEIR OWN EXPENSE.

16. MOVING UTILITIES WILL BE THE RESPONSIBILITY OF THE UTILITY OWNERS EXCEPT AS NOTED ON THE PLANS, IN THE GENERAL NOTES, AND IN THE SPECIFICATIONS. THE CONTRACTOR WILL BE RESPONSIBLE FOR COORDINATING ANY UTILITY RELOCATION(S).

17. A PERMIT IS REQUIRED FROM THE DEPARTMENT OF WATER MANAGEMENT PRIOR TO THE CONSTRUCTION OF, OR REPAIRS TO, UNDERGROUND SEWERS, DRAIN CONNECTIONS, OR SEWER STRUCTURES, INCLUDING THE ADJUSTMENT OF SEWER STRUCTURES AND THE REMOVAL/REPLACEMENT OF FRAMES AND LIDS. THE PERMIT MUST BE OBTAINED BY A DRAIN LAYER CURRENTLY LICENSED BY THE DEPARTMENT OF WATER MANAGEMENT.

18. THE DEPARTMENT OF WATER MANAGEMENT MUST BE NOTIFIED AT LEAST 48 HOURS IN ADVANCE OF CONSTRUCTION WITH THE NAME AND TELEPHONE NUMBER OF A CONTACT PERSON WHO CAN BE CONTACTED FOR ANY SEWER EMERGENCY.

19. IN ORDER TO PROTECT THE CITY'S BENCH MONUMENTS, ALL BENCH MONUMENT LOCATIONS WITHIN THE LIMITS OF THE PROJECT ARE LISTED ON THE PLAN SHEETS. IF ANY BENCH MONUMENTS ARE NOT LOCATED OR IF DAMAGE TO ANY BENCH MONUMENTS IS ENCOUNTERED, PLEASE CONTACT THE DEPARTMENT OF WATER MANAGEMENT IMMEDIATELY AT (312) 747-7893 OR (312) 747-8117.

20. IN THE RELOCATION OF PRIVATE OR PUBLIC UTILITIES, INCLUDING PIPE UNDERDRAINS AND/OR SUBDRAINS, THE UTILITY SHOULD BE LOCATED AS FAR AWAY AS POSSIBLE FROM THE DEPARTMENT OF WATER MANAGEMENT FACILITY. A MINIMUM DISTANCE OF THE OUTSIDE DIAMETER OF THE SEWER (OD) PLUS 4' MUST BE MAINTAINED BETWEEN THE SEWER AND THE UTILITY CENTER LINES. IF THE OUTSIDE DIAMETER/WIDTH OF UTILITY CONDUIT IS MORE THAN THE SEWER OD, A MINIMUM OF 4' HORIZONTAL CLEARANCE MUST BE OBTAINED FROM THE OUTSIDE FACE TO OUTSIDE FACE. 4' HORIZONTAL CLEARANCE IS ALSO REQUIRED FROM ALL SEWER STRUCTURES. A MINIMUM OF 10' HORIZONTAL CLEARANCE AND 1.5' VERTICAL CLEARANCE IS DESIRED BETWEEN THE SEWER AND A WATER MAIN.

21. ADJUSTMENT OF FRAMES AND LIDS OF SEWER STRUCTURES MUST BE COMPLETED PRIOR TO STREET RESURFACING.

22. THE CONTRACTOR MUST MAINTAIN ACCESS TO THE EXISTING SEWER FACILITIES, INCLUDING SEWER STRUCTURES, AT ALL TIMES AND COORDINATE THE PROPOSED IMPROVEMENTS WITH THE DEPARTMENT OF WATER MANAGEMENT ENGINEER/INSPECTOR TO AVOID ANY INTERRUPTION OF THE SEWER FACILITIES MAINTENANCE OR SERVICES. THE SEWER FLOW MUST BE MAINTAINED AT ALL TIMES.

23. THE CONTRACTOR IS RESPONSIBLE FOR THE ADEQUATE PROTECTION OF THE EXISTING SEWERS, DRAIN CONNECTIONS, AND SEWER STRUCTURES FROM DAMAGE CAUSED BY HEAVY EQUIPMENT.

24. THE CONTRACTOR MUST LOCATE AND PROPERLY CONNECT TO THE NEW SEWERS, ALL LIVE HOUSE DRAINS, CATCH BASIN DRAINS, AND OTHER EXISTING LATERALS, DRAINS, AND SEWERS OF WHATEVER NATURE WHICH ARE CONNECTED TO THE EXISTING SEWERS BEING REPAIRED OR REPLACED. THIS WORK WILL BE INCLUDED IN THE COST OF THE CONTRACT.

25. PRIOR TO STARTING CONSTRUCTION, AN INSPECTION OF EXISTING MANHOLES AND CATCH BASINS WILL BE MADE BY THE CITY IN COORDINATION WITH THE DEPARTMENT OF WATER MANAGEMENT INSPECTOR AND THE CONTRACTOR TO DETERMINE THE AMOUNT OF EXISTING DEBRIS IN THESE STRUCTURES. UPON COMPLETION OF THE CONTRACT, THE CONTRACTOR MUST CLEAN ONLY THOSE STRUCTURES WHERE DEBRIS HAS BEEN ADDED DUE TO CONSTRUCTION.

26. EXISTING CATCH BASIN LATERALS TO BE REUSED MUST BE RODDED AND FLUSHED IN THE PRESENCE OF THE DEPARTMENT OF WATER MANAGEMENT INSPECTOR. A NEW CONNECTION TO THE MAIN SEWER IS REQUIRED IF THE EXISTING CATCH BASIN LATERAL IS NOT APPROVED BY THE SEWER INSPECTOR.

27. THE FRAMES AND LIDS OF SEWER STRUCTURES TO BE ABANDONED, REMOVED, OR FILLED MUST BE SALVAGED AND THE DEPARTMENT OF WATER MANAGEMENT NOTIFIED FOR DELIVERY. ANY FRAMES AND LIDS NOT WANTED BY THE DEPARTMENT OF WATER MANAGEMENT MUST BE DISPOSED OF BY THE CONTRACTOR AT NO ADDITIONAL COST.

28. DURING CONSTRUCTION OF THIS PROJECT, THE CONTRACTOR MUST MAINTAIN THE SURFACE DRAINAGE OF THE ROAD AT ALL TIMES.

29. THE CITY OF CHICAGO OFFICE OF PUBLIC SAFETY ADMINISTRATION (OPSA) WILL PERFORM ANY NECESSARY WORK ASSOCIATED WITH THE INSTALLATION AND REMOVAL OF ALL ALARM SYSTEM CABLE. THE CONTRACTOR WILL BE RESPONSIBLE FOR NOTIFYING THE OEMC (MR. JEFF CAIRNS 312-746-9840) PRIOR TO THE COMMENCEMENT OF ALL WORK, MUST COORDINATE ALL WORK ACTIVITIES SO AS NOT TO INTERFERE WITH THE WORK TO BE PERFORMED BY THE OPSA, AND MUST SUPPLY ALL NECESSARY CONDUITS REQUIRED FOR THE FIRE ALARM/POLICE COMMUNICATIONS CABLE CONNECTIONS TO REMAIN IN SERVICE AT ALL TIMES. REQUIRED COORDINATION OF WORK WITH THE OPSA WILL BE CONSIDERED INCLUDED IN THE COST OF THE CONTRACT AND NO ADDITIONAL COMPENSATION OR EXTENSIONS OF TIME WILL BE GRANTED ARISING FROM OR ATTRIBUTED TO SAID COORDINATION.

31. THE CONTRACTOR MUST PROVIDE A RECORD OF ALL MATERIALS DISPOSED AT LOCATIONS OUTSIDE OF PROJECT LIMITS. THE CONTRACTOR MUST PROVIDE A RECORD OF DISPOSAL LOCATION.

32. ALL REFERENCES TO THE ENGINEER IN THE STANDARD SPECIFICATIONS SHALL REFER TO THE COMMISSIONER.

33. BEGINNING ON THE DATE WHEN THE CONTRACTOR BEGINS WORK ON THIS PROJECT THEY MUST ASSUME RESPONSIBILITY FOR THE NORMAL MAINTENANCE OF ALL EXISTING ROADWAYS WITHIN THE LIMITS OF THE IMPROVEMENT. THIS NORMAL MAINTENANCE WILL INCLUDE ALL REPAIR WORK DEEMED NECESSARY BY THE COMMISSIONER BUT WILL NOT INCLUDE SNOW REMOVAL OPERATIONS. FAILURE TO MAINTAIN THE EXISTING ROADWAYS AS INSTRUCTED BY THE COMMISSIONER WILL BE CONSIDERED A TRAFFIC CONTROL DEFICIENCY AND THE CONTRACTOR WILL BE CHARGED FOR TRAFFIC CONTROL DEFICIENCY IN ACCORDANCE WITH THE SPECIFICATIONS.

34. WHEN ADJUSTED UTILITY STRUCTURES ARE IN LANES OPENED TO TRAFFIC BEFORE THE HMA SURFACE COURSE HAS BEEN APPLIED, THESE STRUCTURES MUST BE RAMPED IN ACCORDANCE WITH THE TEMPORARY HMA RAMP DETAILS BEFORE THE LANES ARE OPENED TO TRAFFIC, THE RAMPS ARE TO BE PLACED AT STRUCTURES AS DIRECTED BY THE COMMISSIONER REGARDLESS OF WHETHER THE STRUCTURE SHAPE IS ROUND, SQUARE, OR RECTANGULAR (SEE DRAINAGE DETAILS).

35. CAUTION MUST BE TAKEN WHEN EXCAVATING NEAR STREETCAR TRACKS WHICH EXIST UNDER LAKE STREET AND STATE STREET. THESE TRACKS MAY BE USED AS NEGATIVE CABLE. CONTACT COMED PRIOR TO CUTTING OR REMOVING ANY BURIED STREETCAR RAILS.

36. THE CONTRACTOR SHALL TELEVISE SEWERS BEFORE AND AFTER CONSTRUCTION, WHERE THE SEWER IS BENEATH FULL DEPTH PAVEMENT CONSTRUCTION AND WHERE LATERAL CONNECTIONS TO THE EXISTING SEWERS ARE BEING MADE. ANY DEFICIENCIES FOUND PRIOR TO CONSTRUCTION SHALL BE COORDINATED WITH DWM FOR REPAIR BY DWM.

37. ANY ISSUES OR WORK NEEDED WHEN CROSSING OR ADJACENT TO ANY COMED ASSETS, PLEASE CONTACT ERICKA IRBY VIA EMAIL @ERICKA.IRBY@EXELONCORP.COM AT LEAST SIX WEEKS PRIOR TO CONSTRUCTION START.

DESIGN BY:										
DRAWN BY:										
CHECKED BY:										
APPROVED BY:		4	7/3/2023	ISSUED FOR BID	EAD	EAD	MJL			
CDOT/APPROVED BY:		NO.	DATE	REVISIONS	DES.	DRW.	CHK.	DCCO	CDOT	

TRANSYSTEMS
222 SOUTH RIVERSIDE PLAZA SUITE 610
CHICAGO, ILLINOIS 60606

SKIDMORE, OWINGS & MERRILL LLP
224 SOUTH MICHIGAN AVENUE, SUITE 1000
CHICAGO, ILLINOIS 60604

MICHAEL J. LEV 062-055367 LICENSED PROFESSIONAL ENGINEER STATE OF ILLINOIS

CHICAGO DEPARTMENT OF TRANSPORTATION
DIVISION OF ENGINEERING

STATE / LAKE LOOP ELEVATED STATION
200 NORTH STATE STREET, CHICAGO, IL 60601

SPEC. NO.

CIVIL GENERAL NOTES

DRAWING NO. C-001

CDOT PROJECT D-1-209 | DATE: 7/3/2023 | REVISION NO.

ABBREVIATIONS

℄	CENTERLINE
CB	CATCH BASIN
COM ED	COMMONWEALTH EDISON
CS	COMBINED SEWER
EX	EXISTING
LT	LEFT
T/C	TOP OF CURB
F/L	FLOW LINE
V.I.F.	VERIFY IN FIELD
F/C	FACE OF CURB
PCC	PORTLAND CEMENT CONCRETE
PGL	PROFILE GRADE LINE
PR	PROPOSED
R	RADIUS
ROW	RIGHT OF WAY
RT	RIGHT
TY	TYPE
TYP	TYPICAL
H.P.	HIGH POINT
L.P.	LOW POINT

STANDARD SYMBOLS

	SIGN
00.00	ELEVATION OF TOP OF CURB AT POINT INDICATED
00.00	ELEVATION OF FLOW LINE OF GUTTER AT POINT INDICATED
	MAILBOX
	FIRE HYDRANT
	LIGHT STANDARD
	VALVE, WATER
	BUFFALO BOX, WATER
	METER, WATER
	VALVE, GAS
	UTILITY HANDHOLE
	JUNCTION BOX
	TRAFFIC SIGNAL AND LIGHT STANDARD
	TRAFFIC SIGNAL
	TRAFFIC SIGNAL CONTROL BOX
	STREET LIGHTING CONTROL BOX
	PROPOSED INLET
	EXISTING INLET
	EXISTING INLET TO BE REMOVED
	CATCH BASIN EXISTING
	CATCH BASIN PROPOSED
	CATCH BASIN TO BE REMOVED
	TREES EXISTING
	TREES TO BE REMOVED
	TREES TO BE PLANTED
0.00	ELEVATION
	DIRECTION OF FLOW
	SUMMIT
	BORING
	MANHOLE EXISTING
	MANHOLE PROPOSED
W — W	EXISTING WATER DISTRIBUTION
G — G	EXISTING PEOPLES GAS
	EXISTING COMBINED SEWER
E — E	EXISTING CITY ELECTRIC
E–COMED	EXISTING COMED
T — T	EXISTING TELEPHONE
FO — FO	EXISTING FIBER OPTIC CABLE

UTILITY CONTACTS

LUMEN (LEVEL 3)
GREG HILL (HBK)
EMAIL: GHILL@HBKENGINEERING.COM
PHONE: (908) 328-6500

ZAYO (ABOVENET)
GREG HILL (HBK)
EMAIL: GHILL@HBKENGINEERING.COM
PHONE: (908) 328-6500

RCN
GREG HILL (HBK)
EMAIL: GHILL@HBKENGINEERING.COM
PHONE: (908) 328-6500

COMCAST
GREG HILL (HBK)
EMAIL: GHILL@HBKENGINEERING.COM
PHONE: (908) 328-6500

MCI
LEOTIS ANDERSON - SUPERVISOR
EMAIL: LANDERSON@TELECOM-ENG.COM
PHONE: (312) 612-5216

AT&T
RADMILA BUHA - DESIGN ENGINEER
EMAIL: RB945P@ATT.COM
PHONE: (312) 977-7137

AT&T LNS
JASON STERENBERG
EMAIL: JSTERENBERG@CCSINETWORKS.COM
PHONE: (630) 487-5447

PEOPLES GAS
LUIS BARRAZA - DESIGN ENGINEER
EMAIL: LUIS.BARRAZA@PEOPLESGASDELIVERY.COM
PHONE: (312) 545-9949

COM ED
VINCENT MAZZAFERRO
EMAIL: VINCENT.MAZZAFERRO@COMED.COM
PHONE: (779) 231-1027

CDWM SEWER
SAYEH AMIRSHAGHAGHI - COORDINATING ENGINEER
EMAIL: SAYEH.AMIRSHAGHAGHI@CITYOFCHICAGO.ORG
PHONE: (312) 744-0725

CDWM WATER
SUSAN MCKEE - CTR-DWM FORCE ACCOUNT
EMAIL: SUSAN.MCKEE@CTRWATER.NET
PHONE: (312) 221-6316

CDOT-DEO
EDWIN RODRIGUEZ JR.
EMAIL: EDWIN.RODRIGUEZJR@CITYOFCHICAGO.ORG
PHONE:

CTA
EMILY RYAN
EMAIL: ERYAN@TRANSITCHICAGO.COM
PHONE: (312) 681-3812

CENTRIO (ENWAVE)
GEOFF BARES
EMAIL: GEOFF.BARES@ENWAVE.COM
PHONE: (312) 377-1793

DESIGN BY:										
DRAWN BY:										
CHECKED BY:										
APPROVED BY:		4	7/3/2023	ISSUED FOR BID	EAD	EAD	MJL			
CDOT/APPROVED BY:		NO.	DATE	REVISIONS	DES.	DRW.	CHK.	DCCO	CDOT	

TRANSYSTEMS
222 SOUTH RIVERSIDE PLAZA SUITE 610
CHICAGO, ILLINOIS 60606

SKIDMORE, OWINGS & MERRILL LLP
224 SOUTH MICHIGAN AVENUE, SUITE 1000
CHICAGO, ILLINOIS 60604

CHICAGO DEPARTMENT OF TRANSPORTATION
DIVISION OF ENGINEERING

STATE / LAKE LOOP ELEVATED STATION
200 NORTH STATE STREET, CHICAGO, IL 60601

CIVIL GENERAL NOTES

CDOT PROJECT D-1-209

DATE: 7/3/2023

SPEC. NO.

DRAWING NO. C-002

REVISION NO.

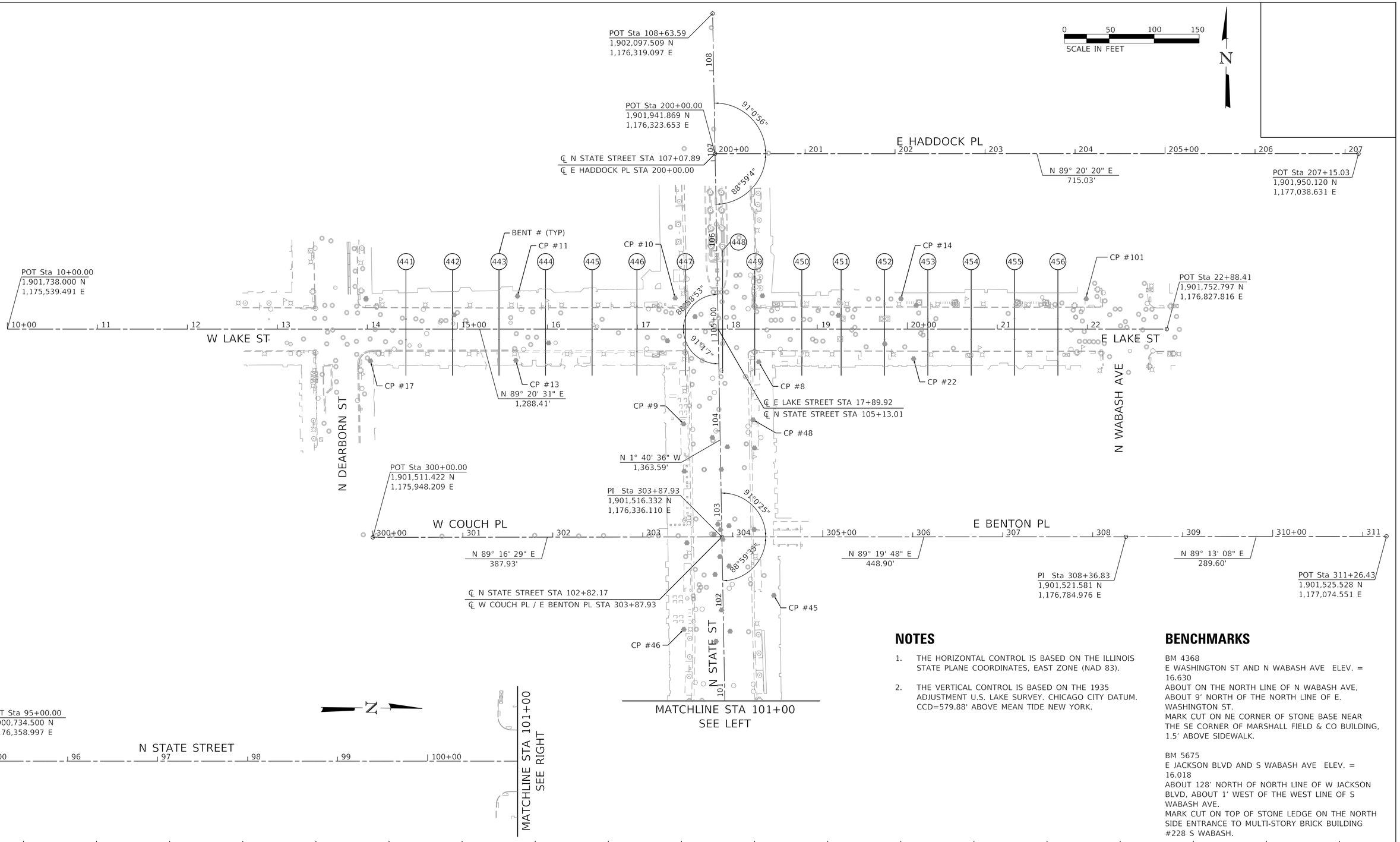

NOTES

1. THE HORIZONTAL CONTROL IS BASED ON THE ILLINOIS STATE PLANE COORDINATES, EAST ZONE (NAD 83).
2. THE VERTICAL CONTROL IS BASED ON THE 1935 ADJUSTMENT U.S. LAKE SURVEY. CHICAGO CITY DATUM. CCD=579.88' ABOVE MEAN TIDE NEW YORK.

BENCHMARKS

BM 4368
E WASHINGTON ST AND N WABASH AVE ELEV. = 16.630
ABOUT ON THE NORTH LINE OF N WABASH AVE, ABOUT 9' NORTH OF THE NORTH LINE OF E. WASHINGTON ST.
MARK CUT ON NE CORNER OF STONE BASE NEAR THE SE CORNER OF MARSHALL FIELD & CO BUILDING, 1.5' ABOVE SIDEWALK.

BM 5675
E JACKSON BLVD AND S WABASH AVE ELEV. = 16.018
ABOUT 128' NORTH OF NORTH LINE OF W JACKSON BLVD, ABOUT 1' WEST OF THE WEST LINE OF S WABASH AVE.
MARK CUT ON TOP OF STONE LEDGE ON THE NORTH SIDE ENTRANCE TO MULTI-STORY BRICK BUILDING #228 S WABASH.

DESIGN BY:										
DRAWN BY:										
CHECKED BY:										
APPROVED BY:		4	7/3/2023	ISSUED FOR BID	EAD	EAD	MJL		
CDOT/APPROVED BY:		NO.	DATE	REVISIONS	DES.	DRW.	CHK.	DCCO	CDOT

TRANSYSTEMS
222 SOUTH RIVERSIDE PLAZA SUITE 610
CHICAGO, ILLINOIS 60606

SKIDMORE, OWINGS & MERRILL LLP
224 SOUTH MICHIGAN AVENUE, SUITE 1000
CHICAGO, ILLINOIS 60604

MICHAEL J. LEV
062-055367
LICENSED PROFESSIONAL ENGINEER
ILLINOIS

CHICAGO DEPARTMENT OF TRANSPORTATION
DIVISION OF ENGINEERING

STATE / LAKE LOOP ELEVATED STATION
200 NORTH STATE STREET, CHICAGO, IL 60601

SPEC. NO.

ALIGNMENT, TIES, AND BENCHMARKS

DRAWING NO.
C-003

CDOT PROJECT D-1-209

DATE: 7/3/2023

REVISION NO.

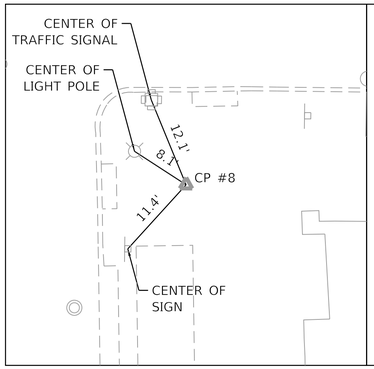

CONTROL POINT #8

STA 18+34.95, 36.45' RT
N. 1,901,711.137 E. 1,176,374.808
ELEV.=14.585

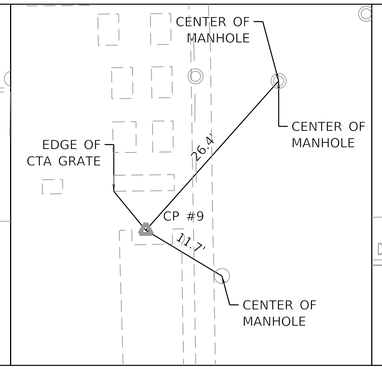

CONTROL POINT #9

STA 104+08.40, 40.32' LT
N. 1,901,641.329 E. 1,176,292.114
ELEV.=14.455

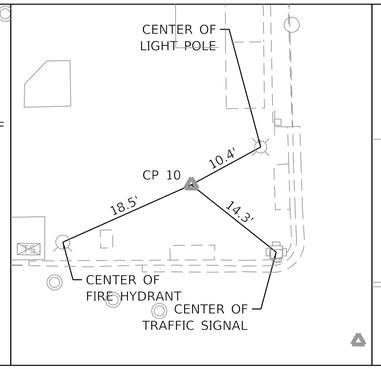

CONTROL POINT #10

STA 17+42.12, 34.49' LT
N. 1,901,781.015 E. 1,176,281.170
ELEV.=14.286

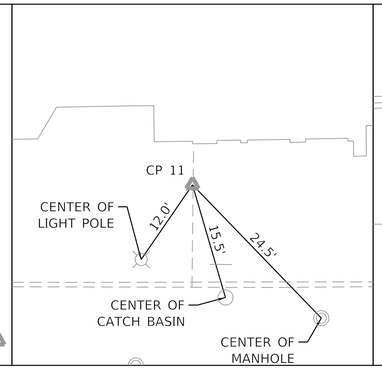

CONTROL POINT #11

STA 15+66.85, 36.66' LT
N. 1,901,781.165 E. 1,176,105.880
ELE.=14.272

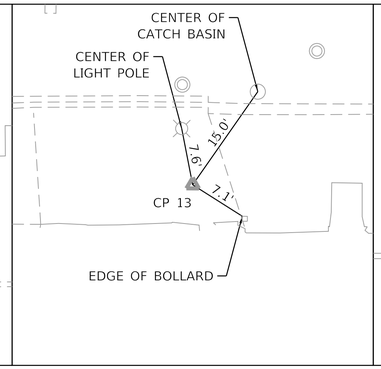

CONTROL POINT #13

STA 15+65.09, 34.81' RT
N. 1,901,709.685 E. 1,176,104.944
ELEV.= 14.313

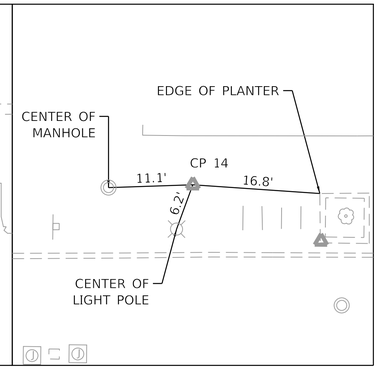

CONTROL POINT #14

STA 19+93.00, 33.83' LT
N. 1,901,783.237 E. 1,176,532.041
ELEV.=14.973

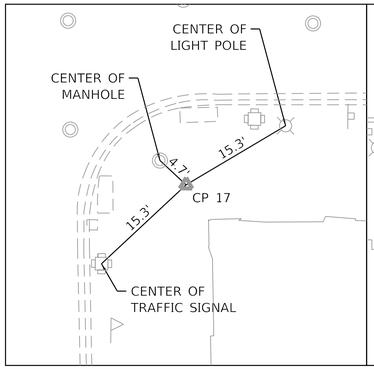

CONTROL POINT #17

STA 14+03.46, 35.31' RT
N. 1,901,707.328 E. 1,175,943.332
ELEV.=14.477

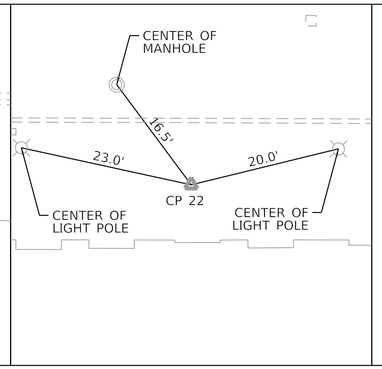

CONTROL POINT #22

STA 20+06.99, 35.95' RT
N. 1,901,716.618 E. 1,176,546.827
ELEV.=14.814

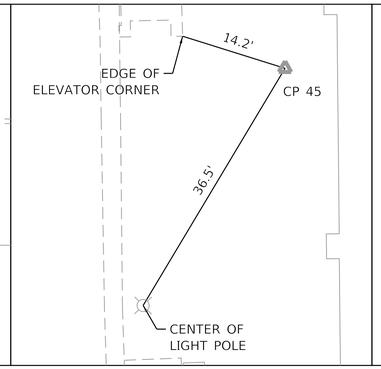

CONTROL POINT #45

STA 102+16.26, 56.56' RT
N. 1,901,452.109 E. 1,176,394.575
ELEV.=14.146

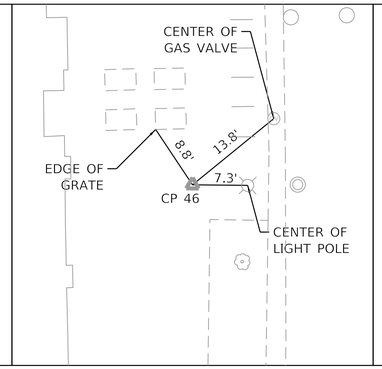

CONTROL POINT #46

STA 101+80.36, 44.07' LT
N. 1,901,413.281 E. 1,176,295.035
ELEV.=14.244

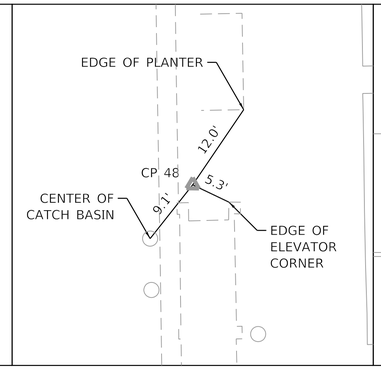

CONTROL POINT #48

STA 104+11.61, 36.95' RT
N. 1,901,646.796 E. 1,176,369.260
ELEV.=14.529

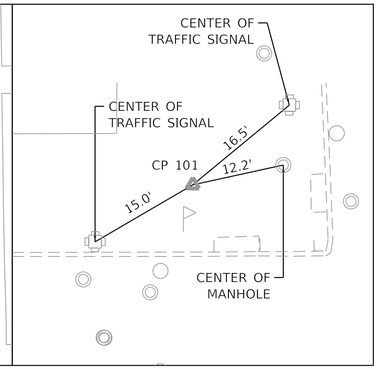

CONTROL POINT #101

STA 21+98.87, 33.60' LT
N. 1,901,785.363 E. 1,176,737.899
ELEV.=15.068

DESIGN BY:										
DRAWN BY:										
CHECKED BY:										
APPROVED BY:		4	7/3/2023	ISSUED FOR BID	AMK	AMK	ZMZ		
CDOT/APPROVED BY:		NO.	DATE	REVISIONS	DES.	DRW.	CHK.	DCCO	CDOT

TRANSYSTEMS
222 SOUTH RIVERSIDE PLAZA SUITE 610
CHICAGO, ILLINOIS 60606

SKIDMORE, OWINGS & MERRILL LLP
224 SOUTH MICHIGAN AVENUE, SUITE 1000
CHICAGO, ILLINOIS 60604

MICHAEL J. LEVI
062-055367
LICENSED PROFESSIONAL ENGINEER
ILLINOIS

CDOT
CHICAGO DEPARTMENT OF TRANSPORTATION
DIVISION OF ENGINEERING

STATE / LAKE LOOP ELEVATED STATION
200 NORTH STATE STREET, CHICAGO, IL 60601

CONTROL POINTS

CDOT PROJECT D-1-209

DATE: 7/3/2023

SPEC. NO.

DRAWING NO. C-004

REVISION NO.

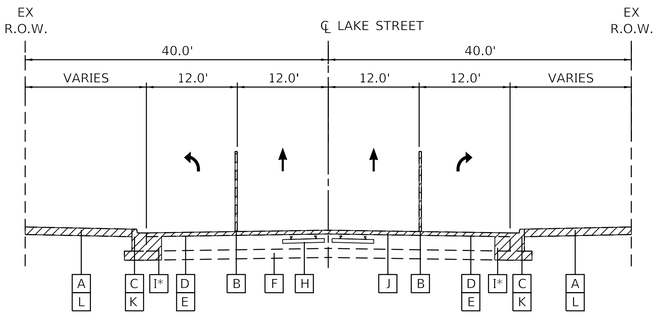

EXISTING TYPICAL SECTION

LAKE STREET
STA 14+18 TO STA 16+41
STA 19+50 TO STA 21+90

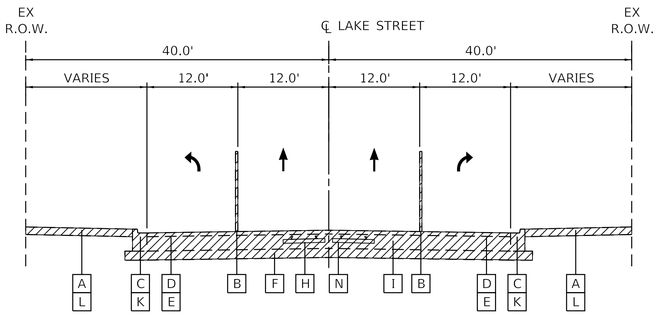

EXISTING TYPICAL SECTION

LAKE STREET
STA 16+41 TO STA 19+50

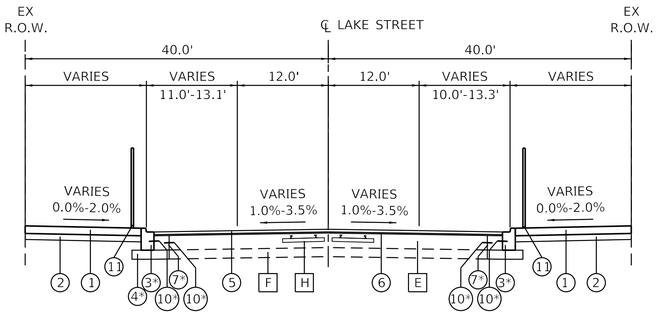

PROPOSED TYPICAL SECTION

LAKE STREET
STA 14+18 TO STA 16+41
STA 19+50 TO STA 21+90

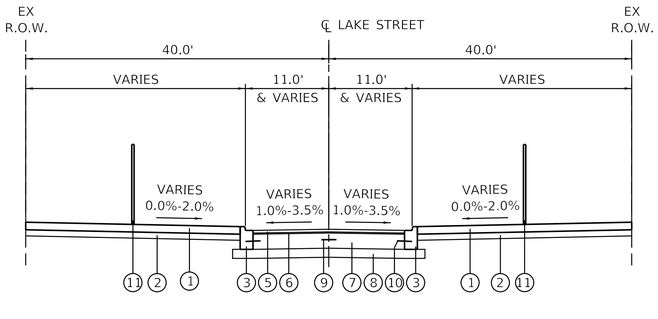

PROPOSED TYPICAL SECTION

LAKE STREET
STA 16+41 TO STA 19+50

HOT–MIX ASPHALT MIXTURE REQUIREMENTS

MIXTURE TYPE	AIR VOIDS @ Ndes
POLYMERIZED HMA SURFACE COURSE, MIX "E", IL-9.5, N70, 1 3/4"	4% @ 70 GYRATIONS
POLYMERIZED HMA BINDER COURSE, IL-4.75, N50, 3/4"	3.5% @ 50 GYRATIONS
LEVELING BINDER (MACHINE METHOD), N50, (LIFTS 3/4" TO 2 1/4")	4% @ 50 GYRATIONS
LEVELING BINDER (HAND METHOD), N50, (LIFTS 3/4" TO 2 1/4")	4% @ 50 GYRATIONS

HMA MIXTURE NOTES:

1. THE UNIT WEIGHT USED TO CALCULATE ALL HMA SURFACE MIXTURE QUANTITIES IS 112 LBS/SQ YD/IN.
2. LEVELING BINDER (HAND METHOD) WILL BE USED FOR TEMPORARY RAMPS AS REQUIRED.
3. LEVELING BINDER (MACHINE METHOD) WILL BE USED AT THE DIRECTION OF THE ENGINEER FOR AREAS THAT ARE UNEVEN AFTER SURFACE REMOVAL.

EXISTING LEGEND

- A PCC SIDEWALK
- B CTA COLUMN (SEE STRUCTURAL SHEETS)
- C CONCRETE CURB AND GUTTER
- D HMA SURFACE AND BINDER COURSES, DEPTH VARIES
- E GRANITE PAVERS OR CONCRETE BASE, DEPTH VARIES
- F AGGREGATE SUBBASE, DEPTH VARIES
- G RAISED MEDIAN
- H STREETCAR TRACK, RAILS AND TIES
- I PAVEMENT REMOVAL
- J HMA SURFACE REMOVAL (VARIABLE DEPTH)
- K COMBINATION CURB AND GUTTER REMOVAL
- L SIDEWALK REMOVAL
- M MEDIAN REMOVAL
- N STREETCAR TRACK REMOVAL
- ITEM TO BE REMOVED/RELOCATED

PROPOSED LEGEND

1. PCC SIDEWALK 5" OR 8"
2. SUBBASE GRANULAR MATERIAL, TYPE B, 4"
3. COMBINATION CURB & GUTTER TYPE BV. 12
4. POROUS GRANULAR EMBANKMENT
5. POLYMERIZED HMA SURFACE COURSE, MIX "E", IL-9.5, N70, 1¾"
6. POLYMERIZED HMA BINDER COURSE, IL-4.75, N50, ¾"
7. PCC BASE COURSE 10"
8. SUBBASE GRANULAR MATERIAL, TYPE B, 6"
9. TYPE B CONSTRUCTION JOINT PER (SEE CDOT STANDARD A-2-3C ON CIVIL DETAIL SHEETS)
10. NO. 5 ROUND TIE BARS (EPOXY COATED) 18" LONG, 30" APART (SEE CDOT STANDARD A-2-6 ON CIVIL DETAIL SHEETS)
11. CTA COLUMN (SEE STRUCTURAL SHEETS)
12. MEDIAN (SEE LANDSCAPE SHEETS)
13. GRANITE CURB (SEE LANDSCAPE SHEETS)

NOTES

1. REMOVAL OF STREETCAR TRACK, INCLUDING RAILS, TIES, AND APPURTENANCES IS INCLUDED AS PART OF PAVEMENT REMOVAL OR PATCHING AND THAT RAILS MUST BE SAWCUT AT THE LIMITS OF ANY REMOVAL.
2. FOR SIDEWALK REMOVAL AND REPLACEMENT AND CURB AND GUTTER REMOVAL AND REPLACEMENT SEE SHEETS C-111 TO C-114 AND C-121 TO C-124.
3. PER ARTICLE 4.2.1 OF THE CDOT RULES AND REGULATIONS FOR CONSTRUCTION IN THE PUBLIC WAY, ALL BACKFILL MATERIAL MUST BE CLSM.

* SEE PLAN SHEETS C-121 AND C-122 FOR LIMITS OF CURB AND GUTTER REPLACEMENT AND ADJACENT PCC BASE COURSE REPLACEMENT.

DESIGN BY:										
DRAWN BY:										
CHECKED BY:										
APPROVED BY:		4	7/3/2023	ISSUED FOR BID	EAD	EAD	MJL			
CDOT/APPROVED BY:		NO.	DATE	REVISIONS	DES.	DRW.	CHK.	DCCO	CDOT	

TRANSYSTEMS
222 SOUTH RIVERSIDE PLAZA SUITE 610
CHICAGO, ILLINOIS 60606

SKIDMORE, OWINGS & MERRILL LLP
224 SOUTH MICHIGAN AVENUE, SUITE 1000
CHICAGO, ILLINOIS 60604

MICHAEL J. LEV
062-055367
LICENSED PROFESSIONAL ENGINEER
ILLINOIS

CHICAGO DEPARTMENT OF TRANSPORTATION
DIVISION OF ENGINEERING

STATE / LAKE LOOP ELEVATED STATION
200 NORTH STATE STREET, CHICAGO, IL 60601

SPEC. NO.

TYPICAL SECTIONS - LAKE STREET

DRAWING NO. C-005

CDOT PROJECT D-1-209

DATE: 7/3/2023

REVISION NO.

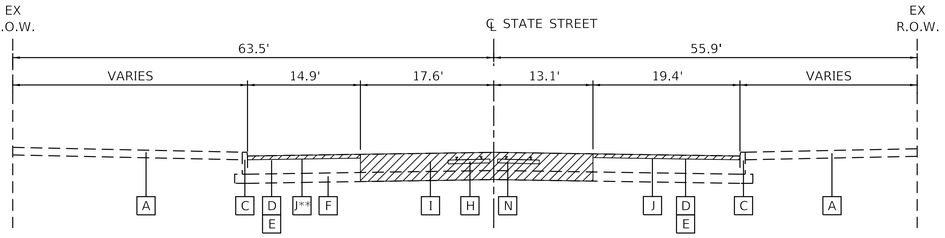

EXISTING TYPICAL SECTION

STATE STREET
STA 101+03 TO STA 104+38.2

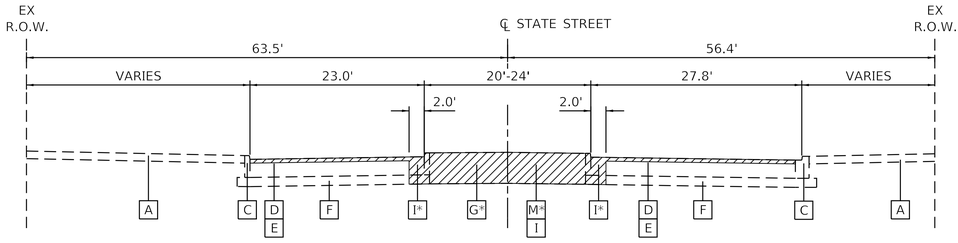

EXISTING TYPICAL SECTION

STATE STREET
STA 104+68.2 LT/104+53.5 RT TO STA 108+55

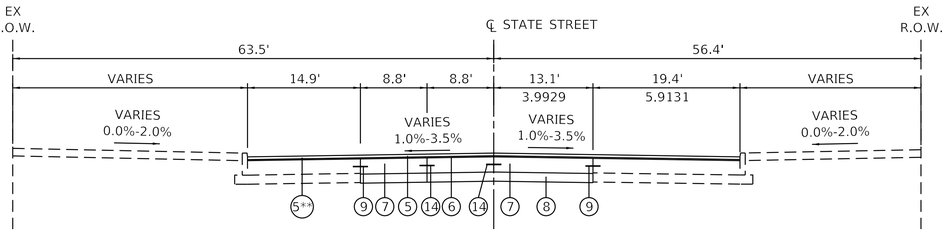

PROPOSED TYPICAL SECTION

STATE STREET
STA 101+03 TO STA 103+14.8

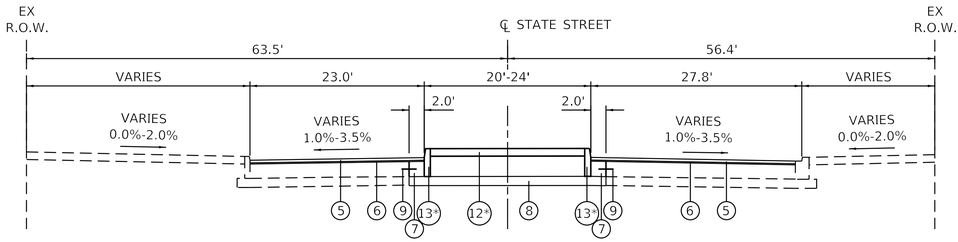

PROPOSED TYPICAL SECTION

STATE STREET
STA 104+68.2 LT/104+53.5 RT TO STA 108+55

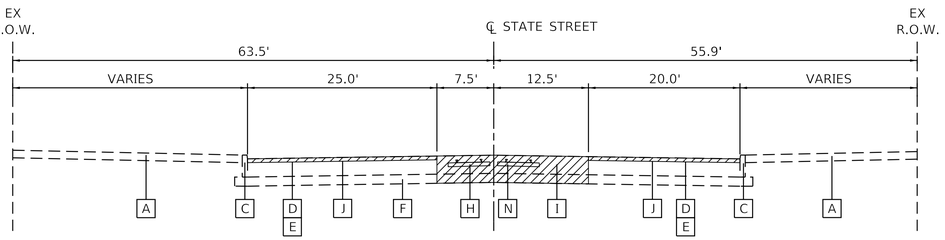

EXISTING TYPICAL SECTION

STATE STREET
STA 103+04.8 TO STA 104+68.2 LT/104+53.5 RT

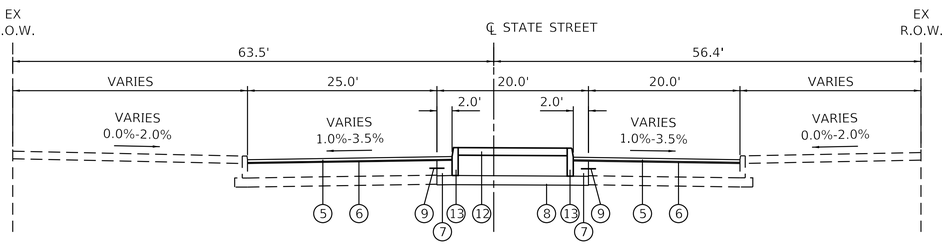

PROPOSED TYPICAL SECTION

STATE STREET
STA 103+14.8 LT/104+53.5 RT TO STA 104+68.2

EXISTING LEGEND

- A — PCC SIDEWALK
- B — CTA COLUMN (SEE STRUCTURAL SHEETS)
- C — CONCRETE CURB AND GUTTER
- D — HMA SURFACE AND BINDER COURSES, DEPTH VARIES
- E — GRANITE PAVERS OR CONCRETE BASE, DEPTH VARIES
- F — AGGREGATE SUBBASE, DEPTH VARIES
- G — RAISED MEDIAN
- H — STREETCAR TRACK, RAILS AND TIES
- I — PAVEMENT REMOVAL
- J — HMA SURFACE REMOVAL (VARIABLE DEPTH)
- K — COMBINATION CURB AND GUTTER REMOVAL
- L — SIDEWALK REMOVAL
- M — MEDIAN REMOVAL
- N — STREETCAR TRACK REMOVAL
- ITEM TO BE REMOVED/RELOCATED

PROPOSED LEGEND

1. PCC SIDEWALK 5" OR 8" (SEE C-121 & C-122 FOR LIMITS)
2. SUBBASE GRANULAR MATERIAL, TYPE B, 4"
3. COMBINATION CURB & GUTTER TYPE BV. 12
4. POROUS GRANULAR EMBANKMENT
5. POLYMERIZED HMA SURFACE COURSE, MIX "E", IL-9.5, N70, 1¾"
6. POLYMERIZED HMA BINDER COURSE, IL-4.75, N50, ¾"
7. PCC BASE COURSE 10"
8. SUBBASE GRANULAR MATERIAL, TYPE B, 6"
9. TYPE B CONSTRUCTION JOINT PER (SEE CDOT STANDARD A-2-3C ON CIVIL DETAIL SHEETS)
10. NO. 5 ROUND TIE BARS (EPOXY COATED) 18" LONG, 30" APART (SEE CDOT STANDARD A-2-6 ON CIVIL DETAIL SHEETS)
11. CTA COLUMN (SEE STRUCTURAL SHEETS)
12. MEDIAN (SEE LANDSCAPE SHEETS)
13. GRANITE CURB (SEE LANDSCAPE SHEETS)
14. TYPE C CONSTRUCTION JOINT PER (SEE CDOT STANDARD A-2-3C ON CIVIL DETAIL SHEETS)

NOTES

1. REMOVAL OF STREETCAR TRACK, INCLUDING RAILS, TIES, AND APPURTENANCES IS INCLUDED AS PART OF PAVEMENT REMOVAL OR PATCHING AND THAT RAILS MUST BE SAWCUT AT THE LIMITS OF ANY REMOVAL.
2. FOR SIDEWALK REMOVAL AND REPLACEMENT AND CURB AND GUTTER REMOVAL AND REPLACEMENT SEE SHEETS C-111 TO C-114 AND C-121 TO C-124.
3. PER ARTICLE 4.2.1 OF THE CDOT RULES AND REGULATIONS FOR CONSTRUCTION IN THE PUBLIC WAY, ALL BACKFILL MATERIAL MUST BE CLSM.
4. EXCEPT AS DIRECTED BY THE COMMISSIONER OR INDICATED IN THE PLANS, STATE ST SIDEWALK MUST MATCH THE EXISTING LAYOUT, COLORS, JOINTING, AND FINISH. SEE SPECIFICATION 32 16 23 FOR CONCRETE MIX INFORMATION.

* EXISTING MEDIAN, CURB, AND PCC BASE COURSE TO REMAIN FROM STA. 105+91.0 TO STA. 108+55.0.

** FULL DEPTH PAVEMENT PATCHES IN THIS SECTION, SEE PROPOSED IMPROVEMENT PLAN FOR SPECIFIC LIMITS.

DESIGN BY:									
DRAWN BY:									
CHECKED BY:									
APPROVED BY:		4	7/3/2023	ISSUED FOR BID	EAD	EAD	MJL		
CDOT/APPROVED BY:		NO.	DATE	REVISIONS	DES.	DRW.	CHK.	DCCO	CDOT

TRANSYSTEMS
222 SOUTH RIVERSIDE PLAZA SUITE 610
CHICAGO, ILLINOIS 60606

SOM
SKIDMORE, OWINGS & MERRILL LLP
224 SOUTH MICHIGAN AVENUE, SUITE 1000
CHICAGO, ILLINOIS 60604

MICHAEL J. LEV 062-055367 LICENSED PROFESSIONAL ENGINEER ILLINOIS

CDOT
CHICAGO DEPARTMENT OF TRANSPORTATION
DIVISION OF ENGINEERING

STATE / LAKE LOOP ELEVATED STATION
200 NORTH STATE STREET, CHICAGO, IL 60601

SPEC. NO.

TYPICAL SECTIONS - STATE STREET

DRAWING NO. C-006

CDOT PROJECT D-1-209 | DATE: 7/3/2023 | REVISION NO.

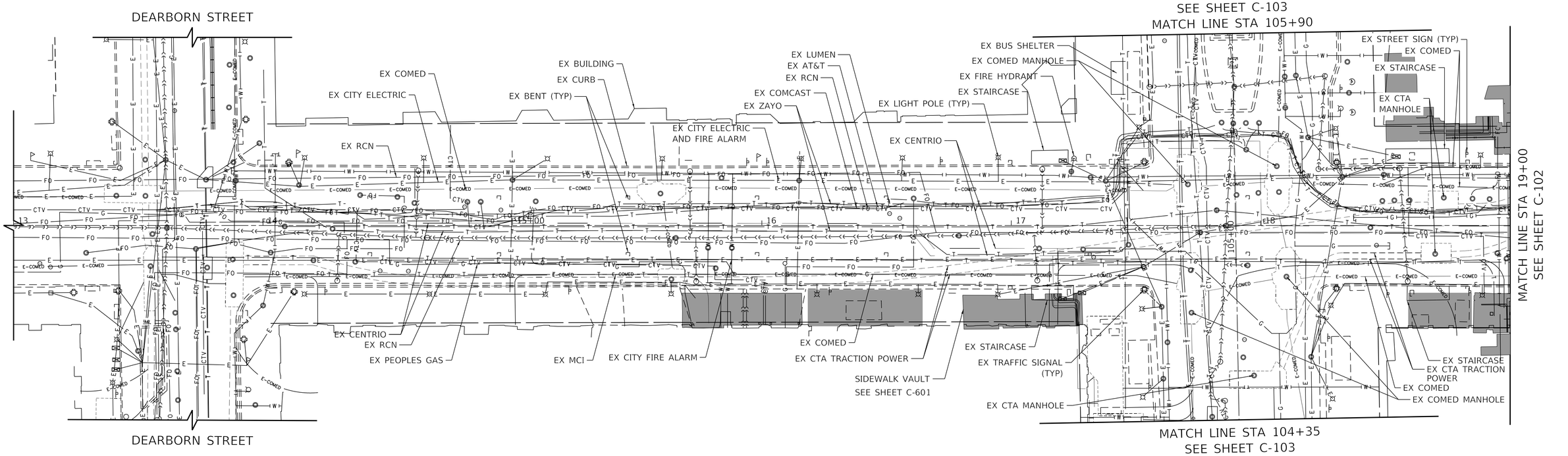

LEGEND

- WATER DISTRIBUTION
- PEOPLES GAS
- COMBINED SEWER
- CITY ELECTRIC
- E–COMED — COMED
- TELEPHONE
- FIBER OPTIC CABLE
- SIDEWALK VAULTS (SEE SHEETS C-600 TO C-602)

N

0 20 40 60
SCALE IN FEET

DESIGN BY:										
DRAWN BY:										
CHECKED BY:										
APPROVED BY:		4	7/3/2023	ISSUED FOR BID	ZMZ	ZMZ	AMK			
CDOT/APPROVED BY:		NO.	DATE	REVISIONS	DES.	DRW.	CHK.	DCCO	CDOT	

TRANSYSTEMS
222 SOUTH RIVERSIDE PLAZA SUITE 610
CHICAGO, ILLINOIS 60606

SKIDMORE, OWINGS & MERRILL LLP
224 SOUTH MICHIGAN AVENUE, SUITE 1000
CHICAGO, ILLINOIS 60604

MICHAEL J. LEV
062-055367
LICENSED PROFESSIONAL ENGINEER
ILLINOIS

CHICAGO DEPARTMENT OF TRANSPORTATION
DIVISION OF ENGINEERING

STATE / LAKE LOOP ELEVATED STATION
200 NORTH STATE STREET, CHICAGO, IL 60601

SPEC. NO.

EXISTING CONDITIONS
LAKE STREET

DRAWING NO.
C-101

CDOT PROJECT D-1-209 | DATE: 7/3/2023 | REVISION NO.

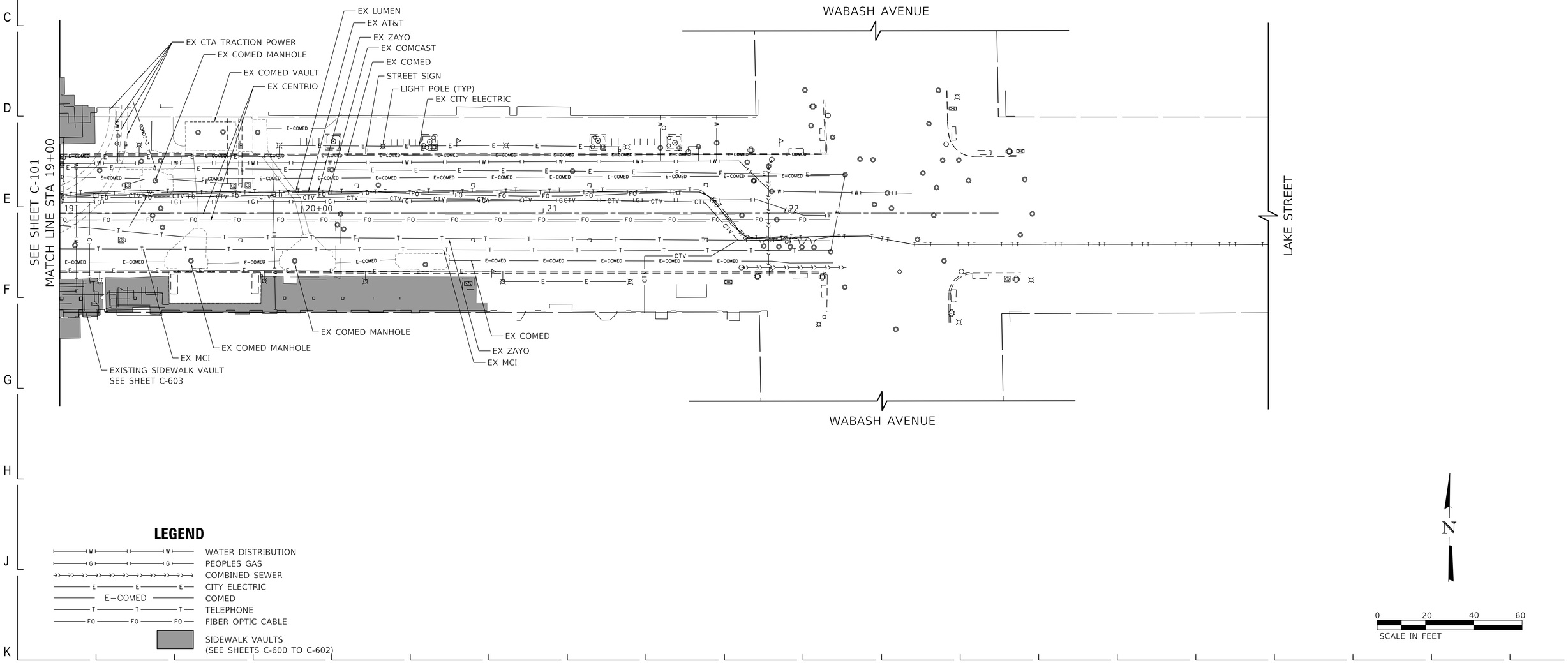

LEGEND

- WATER DISTRIBUTION
- PEOPLES GAS
- COMBINED SEWER
- CITY ELECTRIC
- COMED
- TELEPHONE
- FIBER OPTIC CABLE
- SIDEWALK VAULTS (SEE SHEETS C-600 TO C-602)

N

0 20 40 60
SCALE IN FEET

DESIGN BY:										
DRAWN BY:										
CHECKED BY:										
APPROVED BY:		4	7/3/2023	ISSUED FOR BID	ZMZ	ZMZ	AMK			
CDOT/APPROVED BY:		NO.	DATE	REVISIONS	DES.	DRW.	CHK.	DCCO	CDOT	

TRANSYSTEMS
222 SOUTH RIVERSIDE PLAZA SUITE 610
CHICAGO, ILLINOIS 60606

SOM
SKIDMORE, OWINGS & MERRILL LLP
224 SOUTH MICHIGAN AVENUE, SUITE 1000
CHICAGO, ILLINOIS 60604

MICHAEL J. LEV
062-055367
LICENSED PROFESSIONAL ENGINEER
STATE OF ILLINOIS

CDOT
CHICAGO DEPARTMENT OF TRANSPORTATION
DIVISION OF ENGINEERING

STATE / LAKE LOOP ELEVATED STATION
200 NORTH STATE STREET, CHICAGO, IL 60601

SPEC. NO.

EXISTING CONDITIONS
LAKE STREET

DRAWING NO.
C-102

CDOT PROJECT D-1-209

DATE: 7/3/2023

REVISION NO.

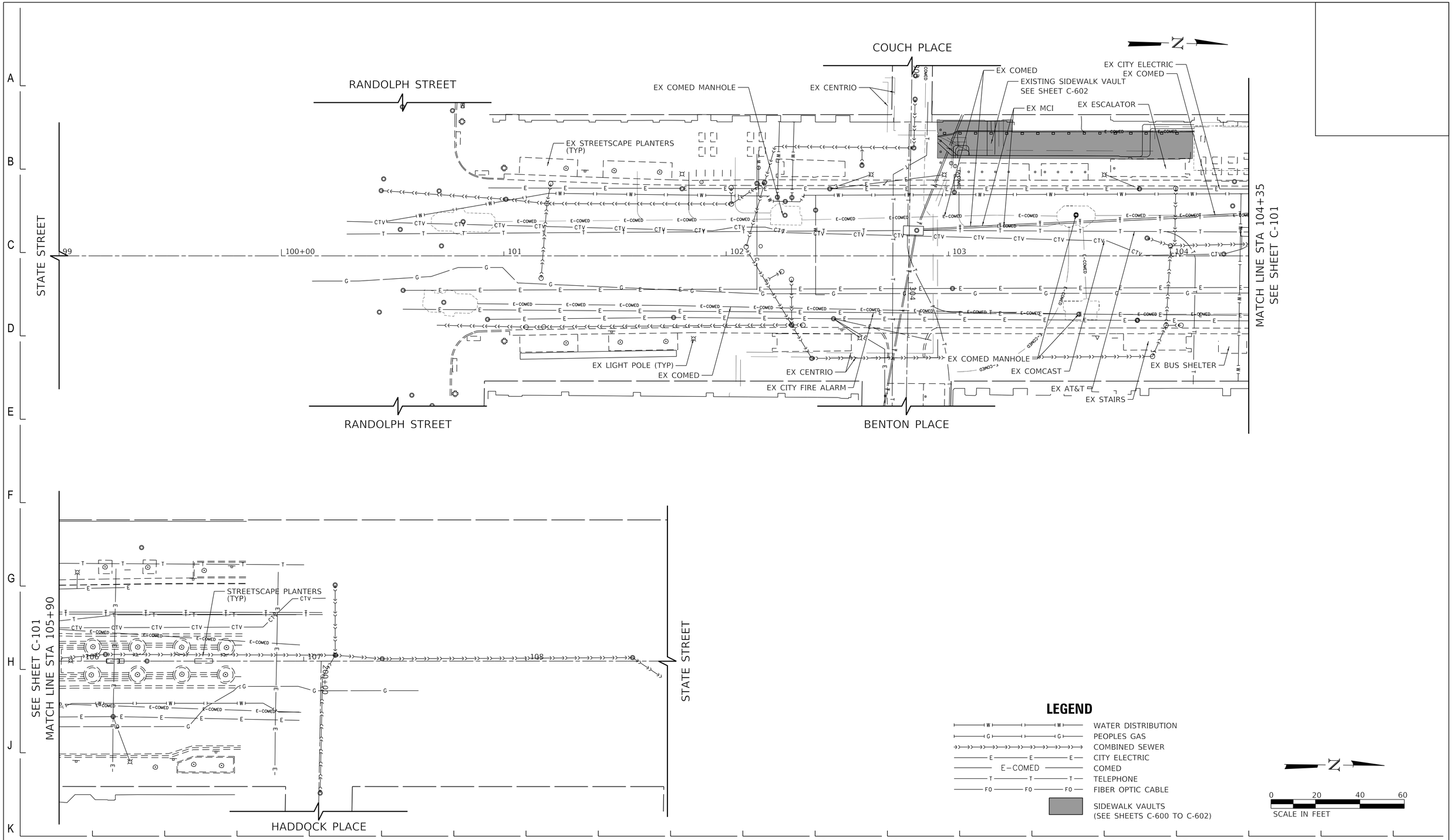

LEGEND

- WATER DISTRIBUTION
- PEOPLES GAS
- COMBINED SEWER
- CITY ELECTRIC
- COMED
- TELEPHONE
- FIBER OPTIC CABLE
- SIDEWALK VAULTS (SEE SHEETS C-600 TO C-602)

SCALE IN FEET: 0 20 40 60

DESIGN BY:										
DRAWN BY:										
CHECKED BY:										
APPROVED BY:		4	7/3/2023	ISSUED FOR BID						
CDOT/APPROVED BY:		NO.	DATE	REVISIONS	DES.	DRW.	CHK.	DCCO	CDOT	

TRANSYSTEMS
222 SOUTH RIVERSIDE PLAZA SUITE 610
CHICAGO, ILLINOIS 60606

SKIDMORE, OWINGS & MERRILL LLP
224 SOUTH MICHIGAN AVENUE, SUITE 1000
CHICAGO, ILLINOIS 60604

MICHAEL J. LEV
062-055367
LICENSED PROFESSIONAL ENGINEER
ILLINOIS

CHICAGO DEPARTMENT OF TRANSPORTATION
DIVISION OF ENGINEERING

STATE / LAKE LOOP ELEVATED STATION
200 NORTH STATE STREET, CHICAGO, IL 60601

EXISTING CONDITIONS
STATE STREET

CDOT PROJECT D-1-209

DATE: 7/3/2023

SPEC. NO.

DRAWING NO.
C-103

REVISION NO.

OUC NOTES

1. CTA OPERATES BUSES ON STATE ST., AND LAKE ST. CTA BUSES REQUIRE 11' MINIMUM LANE WIDTHS. PLEASE CONTACT CTA TRAFFIC PLANNING TO DISCUSS IMPACTS SHOULD THERE BE A DISRUPTION TO BUS ROUTING. PROVIDE AT LEAST TWO WEEKS' NOTICE IS REQUIRED FOR ANY BUS SERVICE CHANGES. CTA'S POINT OF CONTACT: JACK CHALABIAN, COORDINATOR, TRAFFIC PLANNING. E-MAIL AT JCHALABIAN@TRANSITCHICAGO.COM OR DIRECT OFFICE LINE AT 312-681-4176.

2. ZAYO FACILITIES ARE PRESENT IN THE AREA OF CONSTRUCTION IN COMED DUCTS. USE EXTREME CAUTION NEAR ALL ZAYO FACILITIES. HAND EXCAVATION IS REQUIRED TO LOCATE AND EXPOSE FIBER OPTIC FACILITIES PRIOR TO CROSSING AND WHEN WORKING WITHIN 3 FEET OF ALL ZAYO FACILITIES. CONTACT DIGGER FOR LOCATES A MINIMUM OF 48 HOURS PRIOR TO START OF CONSTRUCTION.

3. RCN FACILITIES ARE PRESENT IN THE AREA OF CONSTRUCTION. USE EXTREME CAUTION NEAR ALL RCN FACILITIES. HAND EXCAVATION IS REQUIRED TO LOCATE AND EXPOSE FIBER OPTIC FACILITIES PRIOR TO CROSSING AND WHEN WORKING WITHIN 3 FEET OF ALL RCN FACILITIES. CONTACT DIGGER FOR LOCATES A MINIMUM OF 48 HOURS PRIOR TO START OF CONSTRUCTION.

4. ZAYO FACILITIES ARE PRESENT IN THE AREA OF CONSTRUCTION IN COMED DUCTS. USE EXTREME CAUTION NEAR ALL ZAYO FACILITIES. HAND EXCAVATION IS REQUIRED TO LOCATE AND EXPOSE FIBER OPTIC FACILITIES PRIOR TO CROSSING AND WHEN WORKING WITHIN 3 FEET OF ALL ZAYO FACILITIES. CONTACT DIGGER FOR LOCATES A MINIMUM OF 48 HOURS PRIOR TO START OF CONSTRUCTION.

5. COMCAST HAS EXISTING UNDERGROUND IN THE AREA. PLEASE PROCEED WITH EXTREME CAUTION, MAKE SURE TO CALL DIGGER PRIOR TO START EXCAVATION, USE HAND DIGGING IN THE AREAS WHERE COMCAST FACILITIES ARE MARKED. PLEASE BE NOTED THAT COMCAST RESERVES THE RIGHT TO MAINTAIN, REPLACE AND RELOCATE THEIR FACILITIES IF NEEDED AND THE COST IS 100% BILLABLE TO REQUESTER.

6. DISTURBED ROW PAVEMENT/PARKWAY DURING UTILITY CONFLICTS & FOUNDATION INSTALLATIONS TO BE RESTORED TO ORIGINAL CONDITIONS CONFORMING TO CDOT TRENCH BACKFILL STD. DETAILS.

7. MCI/WOW FACILITIES ARE PRESENT IN THE PROPOSED AREA OF CONSTRUCTION. USE EXTREME CAUTION NEAR ALL MCI/WOW FACILITIES. HAND EXCAVATION IS REQUIRED TO LOCATE AND EXPOSE FIBER OPTIC FACILITIES PRIOR TO CROSSING AND WHEN WORKING WITHIN 3 FEET OF ALL MCI/WOW FACILITIES. CONTACT DIGGER FOR LOCATES A MINIMUM OF 48 HOURS PRIOR TO START OF CONSTRUCTION.

8. LEVEL 3 FACILITIES ARE PRESENT IN THE AREA OF CONSTRUCTION IN AT&T DUCTS. USE EXTREME CAUTION NEAR ALL LEVEL 3 FACILITIES. HAND EXCAVATION IS REQUIRED TO LOCATE AND EXPOSE FIBER OPTIC FACILITIES PRIOR TO CROSSING AND WHEN WORKING WITHIN 3 FEET OF ALL LEVEL 3 FACILITIES. CONTACT DIGGER FOR LOCATES A MINIMUM OF 48 HOURS PRIOR TO START OF CONSTRUCTION.

9. ENWAVE FACILITIES ARE PRESENT IN THE AREA OF CONSTRUCTION. ENWAVE NEEDS AT LEAST 12 TO 18 INCHES MINIMUM FOR CLEARANCE. CONTACT DIGGER FOR LOCATES A MINIMUM OF 48 HOURS PRIOR TO START OF CONSTRUCTION.

10. THIS PROJECT IS ADJACENT TO THE CTA'S ELEVATED LOOP TRACK STRUCTURES ALONG WEST & EAST LAKE STREET, SUBWAY STATE/LAKE STATION TUNNELS STRUCTURES, MEZZANINE STRUCTURES ALONG NORTH STATE STREET, EXISTING ENTRANCE/EXIT TO THE STATE/LAKE SUBWAY STATION LOCATED ON S/W & S/E CORNER OF INTERSECTION OF NORTH STATE STREET AND E/W LAKE STREET, AND STEEL STAIRS TO THE ELEVATED STATION LOCATION ON N/W, N/E, S/W & S/E CORNER OF INTERSECTION OF NORTH STATE STREET AND E/W LAKE STREET. STREET. THE CONTRACTOR SHALL USE EXTREME CAUTION WHEN WORKING NEAR, BELOW AND OVER EXISTING CTA'S STRUCTURES. THE TOP OF EXISTING CTA'S MEZZANINE STRUCTURES VARIES APPROXIMATELY 5'-11" TO 13'-3" BELOW TOP OF EXISTING PAVEMENT, THE TOP OF EXISTING TUNNEL STRUCTURE VARIES APPROXIMATELY 22'-9" TO 30'-11" BELOW OF EXISTING PAVEMENT. CONTRACTOR SHALL VERIFY DIMENSIONS WHEN CROSSING OF CTA'S SUBWAY TUNNEL AND MEZZANINE STRUCTURES IN THE FIELD BEFORE START OF WORK. EXITS/ENTRANCES TO THE SUBWAY AND ELEVATED STATION SHALL REMAIN OPEN AND UNCOVERED DURING CONSTRUCTION ALL TIMES. PROTECT THE CTA'S STRUCTURES FROM CONSTRUCTION DEBRIS. THE CONTRACTOR SHALL RESTORE ALL DAMAGED STRUCTURES AND UTILITIES TO THE SATISFACTION OF THE CTA. MAINTAIN MINIMUM 4'-6" HORIZONTAL CLEARANCE FROM EXISTING AND NEW STEEL COLUMNS AND EXISTING ENTRANCES/EXIT STRUCTURES TO THE SUBWAY STATION TO THE NEAREST POINT OF CONSTRUCTION AREA. MAINTAIN A MINIMUM 1'-6" VERTICAL CLEARANCE BETWEEN TOP OF EXISTING MEZZANINE & WATERPROOFING STRUCTURES AND BOTTOM OF PROPOSED CONSTRUCTION AREA.

11. COORDINATE INSURANCE REQUIREMENTS WITH TAMIKA PRESS, COORDINATOR, INSURANCE BENEFITS, 312-681-3134. THIS WORK IS SUBJECT TO THE REQUIREMENTS ESTABLISHED IN THE CTA ADJACENT CONSTRUCTION MANUAL AND "CTA REQUIREMENTS FOR CONTRACTORS WORKING ALONG THE RIGHT –OF – WAY (R.O.W.)" WHICH CAN BE FOUND HERE: HTTP://WWW.TRANSITCHICAGO.COM/NEARBYCONSTRUCTION/

12. COORDINATE ALL ACTIVITIES WITH RYAN, EMILY A, CONSTRUCTION PROJECT MANAGER I, CAPITAL CONSTRUCTION , PHONE:773-539-4640, AND MICHAEL D. PEREZ, TESTING ENGINEER V, ENGINEERING TECHNICAL SUPPORT FRANKLIN SUBSTATION TWO WEEKS BEFORE START OF CONSTRUCTION, PHONE: 312-681-4930, REFERENCE OUC NUMBER: EFP - 114662, RE: SAFETY, SECURITY, INSURANCE, FLAGGING SERVICE, ETC.

DESIGN BY:									
DRAWN BY:									
CHECKED BY:									
APPROVED BY:		4	7/3/2023	ISSUED FOR BID	EAD	EAD	MJL		
CDOT/APPROVED BY:		NO.	DATE	REVISIONS	DES.	DRW.	CHK.	DCCO	CDOT

TranSystems
TRANSYSTEMS
222 SOUTH RIVERSIDE PLAZA SUITE 610
CHICAGO, ILLINOIS 60606

SOM
SKIDMORE, OWINGS & MERRILL LLP
224 SOUTH MICHIGAN AVENUE, SUITE 1000
CHICAGO, ILLINOIS 60604

MICHAEL J. LEV
062-055367
LICENSED PROFESSIONAL ENGINEER
ILLINOIS

CDOT
CHICAGO DEPARTMENT OF TRANSPORTATION
DIVISION OF ENGINEERING

STATE / LAKE LOOP ELEVATED STATION
200 NORTH STATE STREET, CHICAGO, IL 60601

OUC NOTES

CDOT PROJECT D-1-209 | DATE: 7/3/2023

SPEC. NO.

DRAWING NO. C-104

REVISION NO.

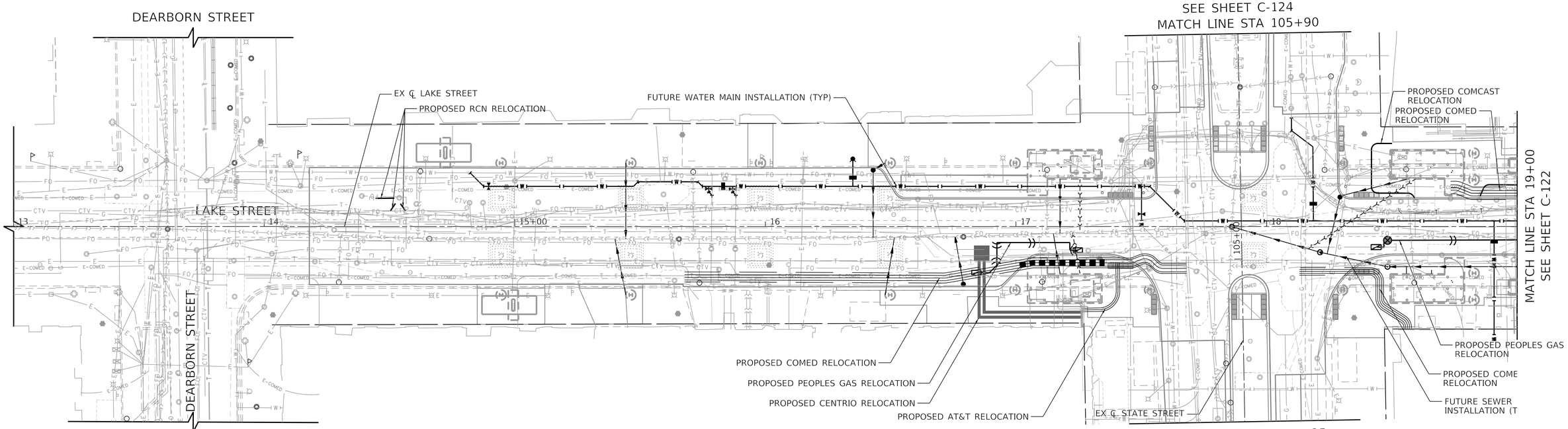

NOTES

1. THESE SHEETS DEPICT INFORMATION PROVIDED BY UTILITY COMPANIES AS DEPICTED IN THE JOINT BUILD FROM OUC EFP-114662 AS OF 06-17-2022, AS WELL AS COMED'S EFP-117884,121820,120415 AND 120630. THESE RELOCATIONS ARE ANTICIPATED TO BE COMPLETE BEFORE THE START OF CONSTRUCTION.

N

0 20 40 60
SCALE IN FEET

DESIGN BY:										
DRAWN BY:										
CHECKED BY:										
APPROVED BY:		4	7/3/2023	ISSUED FOR BID	AMK	AMK	ZMZ			
CDOT/APPROVED BY:		NO.	DATE	REVISIONS	DES.	DRW.	CHK.	DCCO	CDOT	

TRANSYSTEMS
222 SOUTH RIVERSIDE PLAZA SUITE 610
CHICAGO, ILLINOIS 60606

SKIDMORE, OWINGS & MERRILL LLP
224 SOUTH MICHIGAN AVENUE, SUITE 1000
CHICAGO, ILLINOIS 60604

MICHAEL J. LEV
062-055367
LICENSED PROFESSIONAL ENGINEER
STATE OF ILLINOIS

CHICAGO DEPARTMENT OF TRANSPORTATION
DIVISION OF ENGINEERING

STATE / LAKE LOOP ELEVATED STATION
200 NORTH STATE STREET, CHICAGO, IL 60601

SPEC. NO.

OUC SUBMITTAL OVERVIEW
LAKE STREET

DRAWING NO.
C-105

CDOT PROJECT D-1-209 | DATE: 7/3/2023 | REVISION NO.

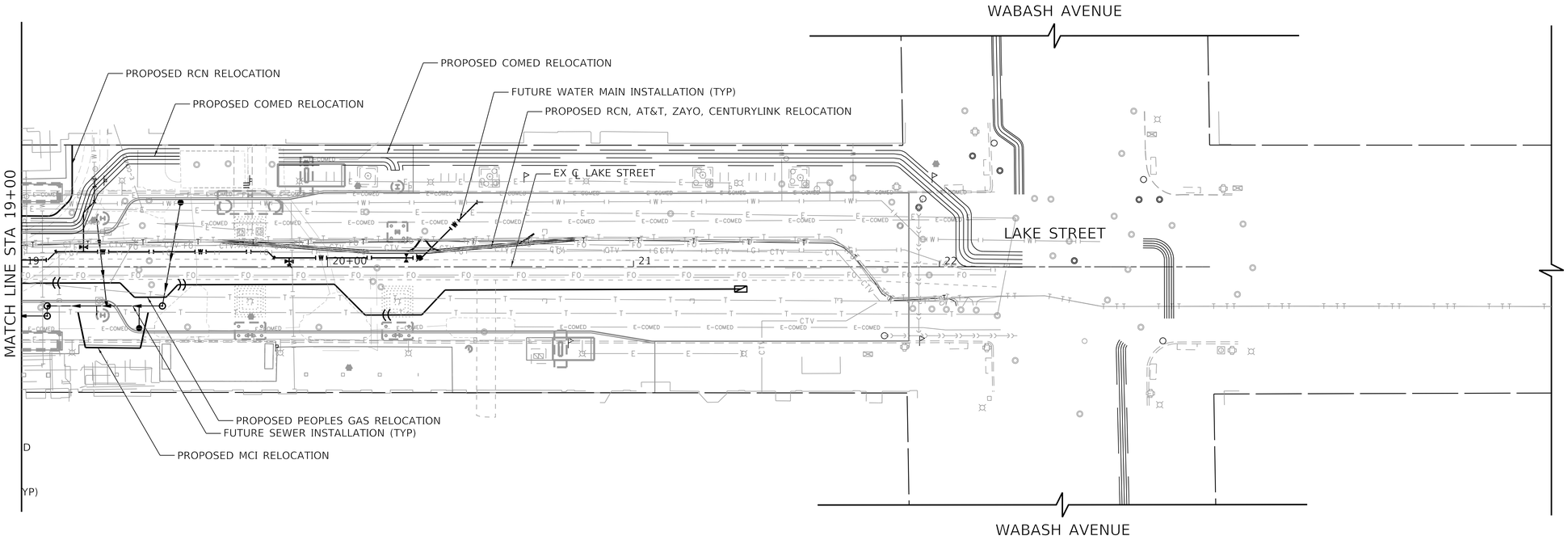

NOTES

1. THESE SHEETS DEPICT INFORMATION PROVIDED BY UTILITY COMPANIES AS DEPICTED IN THE JOINT BUILD FROM OUC EFP-114662 AS OF 06-17-2022, AS WELL AS COMED'S EFP-117884,121820,120415 AND 120630. THESE RELOCATIONS ARE ANTICIPATED TO BE COMPLETE BEFORE THE START OF CONSTRUCTION.

N

0 20 40 60
SCALE IN FEET

DESIGN BY:										
DRAWN BY:										
CHECKED BY:										
APPROVED BY:		4	7/3/2023	ISSUED FOR BID	AMK	AMK	ZMZ			
CDOT/APPROVED BY:		NO.	DATE	REVISIONS	DES.	DRW.	CHK.	DCCO	CDOT	

TRANSYSTEMS
222 SOUTH RIVERSIDE PLAZA SUITE 610
CHICAGO, ILLINOIS 60606

SKIDMORE, OWINGS & MERRILL LLP
224 SOUTH MICHIGAN AVENUE, SUITE 1000
CHICAGO, ILLINOIS 60604

MICHAEL J. LEY
062-055367
LICENSED PROFESSIONAL ENGINEER
ILLINOIS

CHICAGO DEPARTMENT OF TRANSPORTATION
DIVISION OF ENGINEERING

STATE / LAKE LOOP ELEVATED STATION
200 NORTH STATE STREET, CHICAGO, IL 60601

SPEC. NO.

OUC SUBMITTAL OVERVIEW
LAKE STREET

DRAWING NO.
C-106

CDOT PROJECT D-1-209 | DATE: 7/3/2023 | REVISION NO.

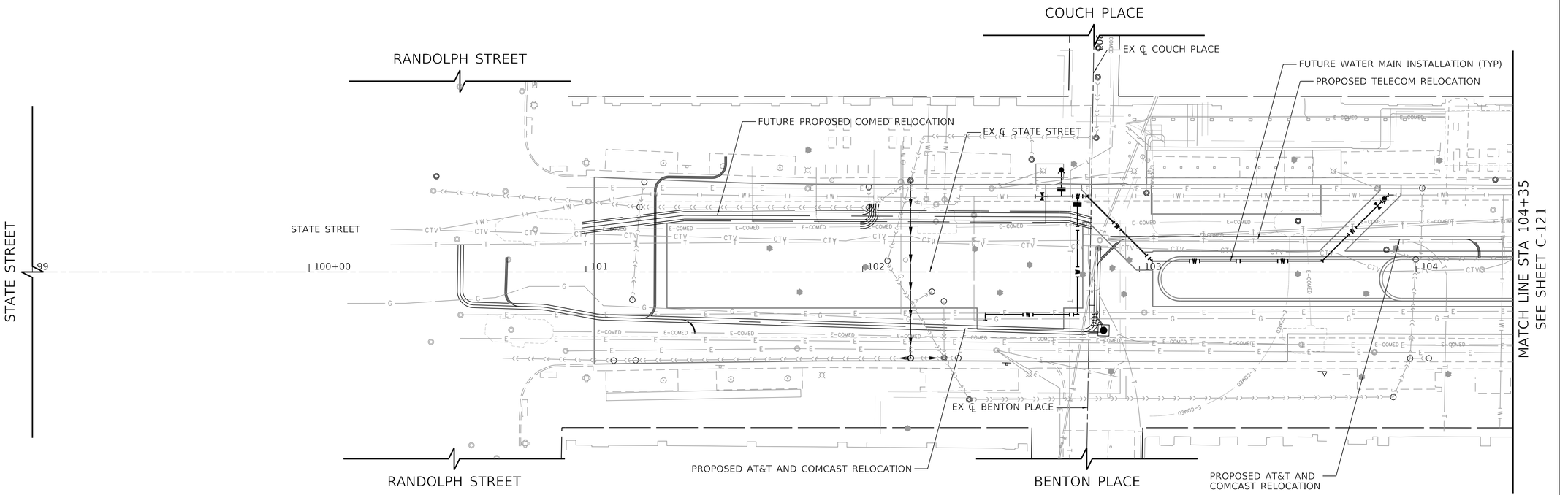

NOTES

1. THESE SHEETS DEPICT INFORMATION PROVIDED BY UTILITY COMPANIES AS DEPICTED IN THE JOINT BUILD FROM OUC EFP-114662 AS OF 06-17-2022, AS WELL AS COMED'S EFP-117884,121820,120415 AND 120630. THESE RELOCATIONS ARE ANTICIPATED TO BE COMPLETE BEFORE THE START OF CONSTRUCTION.

N

0 20 40 60
SCALE IN FEET

DESIGN BY:										
DRAWN BY:										
CHECKED BY:										
APPROVED BY:		4	7/3/2023	ISSUED FOR BID	EAD	EAD	MJL			
CDOT/APPROVED BY:		NO.	DATE	REVISIONS	DES.	DRW.	CHK.	DCCO	CDOT	

TRANSYSTEMS
222 SOUTH RIVERSIDE PLAZA SUITE 610
CHICAGO, ILLINOIS 60606

SKIDMORE, OWINGS & MERRILL LLP
224 SOUTH MICHIGAN AVENUE, SUITE 1000
CHICAGO, ILLINOIS 60604

MICHAEL J. LEV
062-055367
LICENSED PROFESSIONAL ENGINEER
ILLINOIS

CHICAGO DEPARTMENT OF TRANSPORTATION
DIVISION OF ENGINEERING

STATE / LAKE LOOP ELEVATED STATION
200 NORTH STATE STREET, CHICAGO, IL 60601

SPEC. NO.

OUC SUBMITTAL OVERVIEW
STATE STREET

DRAWING NO.
C-107

CDOT PROJECT D-1-209 | DATE: 7/3/2023 | REVISION NO.

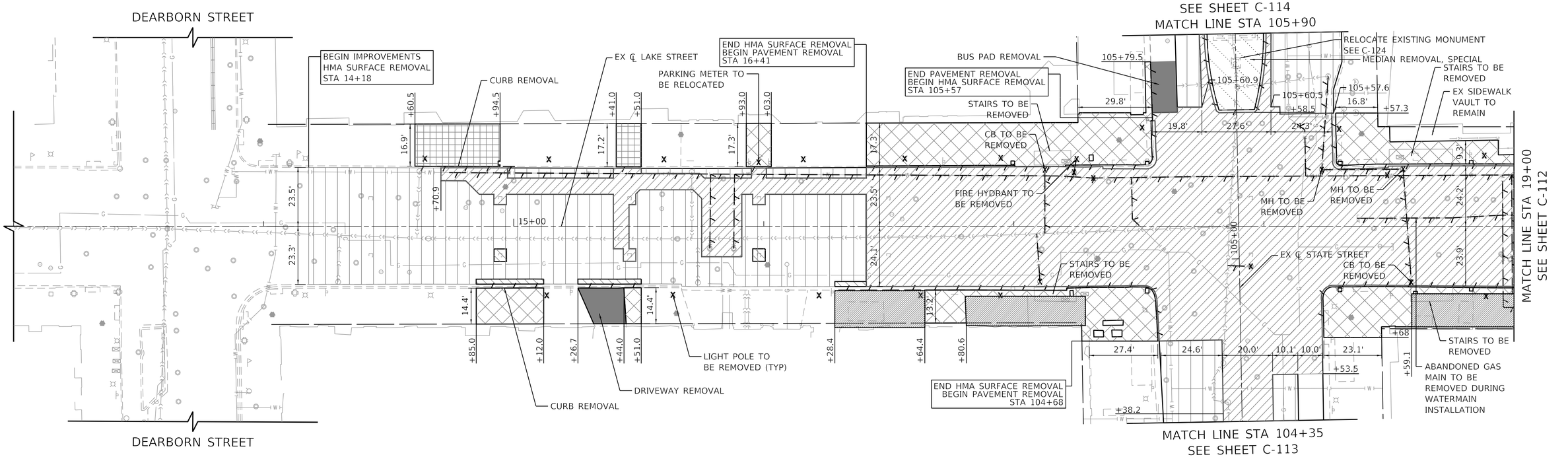

LEGEND

- PAVEMENT MILLING
- FULL-DEPTH PAVEMENT REMOVAL
- SIDEWALK REMOVAL
- REMOVE AND REINSTALL PAVERS SEE LANDSCAPING SHEETS
- SIDEWALK VAULT REMOVAL (SEE STRUCTURAL SHEETS)
- WATER MAIN REMOVAL OR TO BE ABANDONED
- STORM SEWER REMOVAL OR TO BE FILLED
- LINEAR REMOVAL
- X ITEM TO BE REMOVED
- X LIGHT POLE TO BE REMOVED SEE E-182 FOR DETAILS

NOTES

1. SEE SHEETS C-101 TO C-103 FOR EXISTING CONDITIONS.
2. CONTRACTOR TO PROTECT ADJACENT PAVEMENTS AND STRUCTURES NOT BEING REMOVED. ANY DAMAGE TO BE REPAIRED AT THE CONTRACTOR'S EXPENSE.
3. CONTRACTOR MUST PROTECT ALL EXISTING UTILITIES TO REMAIN AND EXISTING UTILITIES TO BE DEMOLISHED UNTIL THEY ARE SCHEDULED TO BE DEMOLISHED TO THE APPROVAL OF THE COMMISSIONER.
4. THE CONTRACTOR IS RESPONSIBLE FOR MONITORING ADJACENT BUILDINGS AND THE CTA STRUCTURE FOR DAMAGE AND MOVEMENT THROUGHOUT CONSTRUCTION.

N

0 20 40 60
SCALE IN FEET

DESIGN BY:									
DRAWN BY:									
CHECKED BY:									
APPROVED BY:		4	7/3/2023	ISSUED FOR BID	EAD	EAD	MJL		
CDOT/APPROVED BY:		NO.	DATE	REVISIONS	DES.	DRW.	CHK.	DCCO	CDOT

TRANSYSTEMS
222 SOUTH RIVERSIDE PLAZA SUITE 610
CHICAGO, ILLINOIS 60606

SKIDMORE, OWINGS & MERRILL LLP
224 SOUTH MICHIGAN AVENUE, SUITE 1000
CHICAGO, ILLINOIS 60604

MICHAEL J. LEY
062-055367
LICENSED PROFESSIONAL ENGINEER
ILLINOIS

CHICAGO DEPARTMENT OF TRANSPORTATION
DIVISION OF ENGINEERING

STATE / LAKE LOOP ELEVATED STATION
200 NORTH STATE STREET, CHICAGO, IL 60601

SPEC. NO.

DEMOLITION PLAN
LAKE STREET

DRAWING NO.
C-111

CDOT PROJECT D-1-209

DATE: 7/3/2023

REVISION NO.

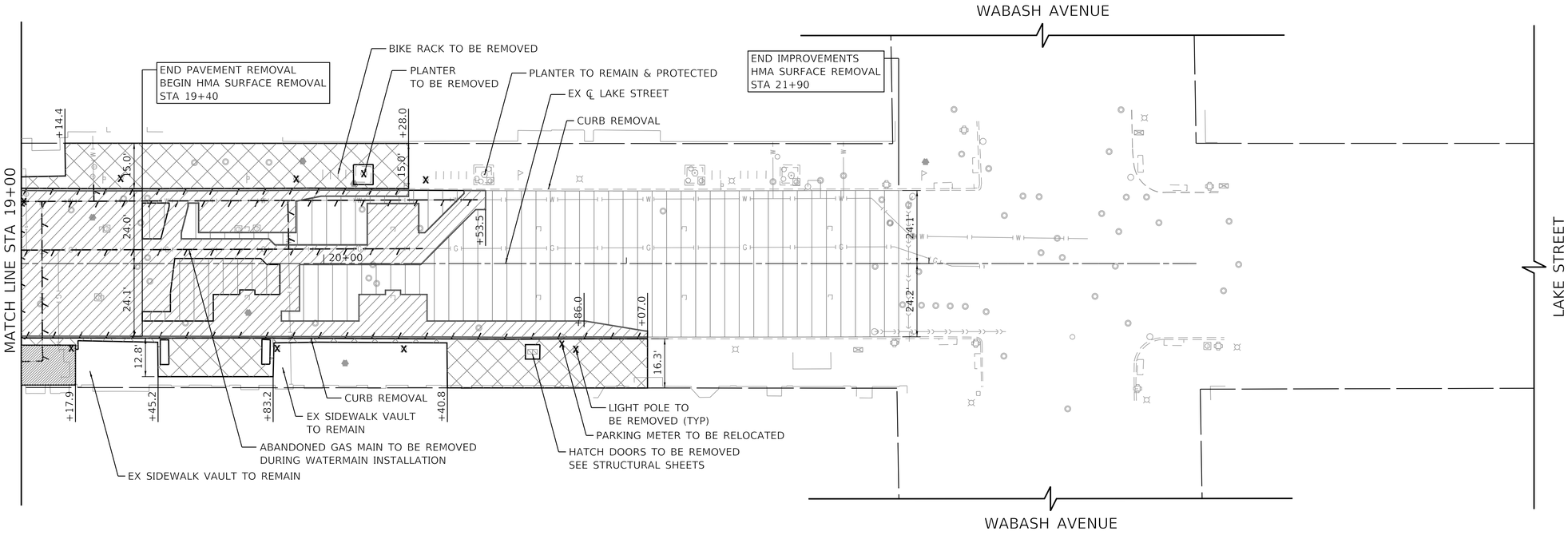

LEGEND

- PAVEMENT MILLING
- FULL-DEPTH PAVEMENT REMOVAL
- SIDEWALK REMOVAL
- REMOVE AND REINSTALL PAVERS SEE LANDSCAPING SHEETS
- SIDEWALK VAULT REMOVAL (SEE STRUCTURAL SHEETS)
- WATER MAIN REMOVAL OR TO BE ABANDONED
- STORM SEWER REMOVAL OR TO BE FILLED
- LINEAR REMOVAL
- X ITEM TO BE REMOVED
- X LIGHT POLE TO BE REMOVED SEE E-182 FOR DETAILS

NOTES

1. SEE SHEETS C-101 TO C-103 FOR EXISTING CONDITIONS.
2. CONTRACTOR TO PROTECT ADJACENT PAVEMENTS AND STRUCTURES NOT BEING REMOVED. ANY DAMAGE TO BE REPAIRED AT THE CONTRACTOR'S EXPENSE.
3. CONTRACTOR MUST PROTECT ALL EXISTING UTILITIES TO REMAIN AND EXISTING UTILITIES TO BE DEMOLISHED UNTIL THEY ARE SCHEDULED TO BE DEMOLISHED TO THE APPROVAL OF THE COMMISSIONER.
4. THE CONTRACTOR IS RESPONSIBLE FOR MONITORING ADJACENT BUILDINGS AND THE CTA STRUCTURE FOR DAMAGE AND MOVEMENT THROUGHOUT CONSTRUCTION.

N

0 20 40 60
SCALE IN FEET

DESIGN BY:										
DRAWN BY:										
CHECKED BY:										
APPROVED BY:		4	7/3/2023	ISSUED FOR BID	EAD	EAD	MJL			
CDOT/APPROVED BY:		NO.	DATE	REVISIONS	DES.	DRW.	CHK.	DCCO	CDOT	

TRANSYSTEMS
222 SOUTH RIVERSIDE PLAZA SUITE 610
CHICAGO, ILLINOIS 60606

SKIDMORE, OWINGS & MERRILL LLP
224 SOUTH MICHIGAN AVENUE, SUITE 1000
CHICAGO, ILLINOIS 60604

MICHAEL J. LEV
062-055367
LICENSED PROFESSIONAL ENGINEER
ILLINOIS

CHICAGO DEPARTMENT OF TRANSPORTATION
DIVISION OF ENGINEERING

STATE / LAKE LOOP ELEVATED STATION
200 NORTH STATE STREET, CHICAGO, IL 60601

SPEC. NO.

DEMOLITION PLAN
LAKE STREET

DRAWING NO.
C-112

CDOT PROJECT D-1-209 | DATE: 7/3/2023 | REVISION NO.

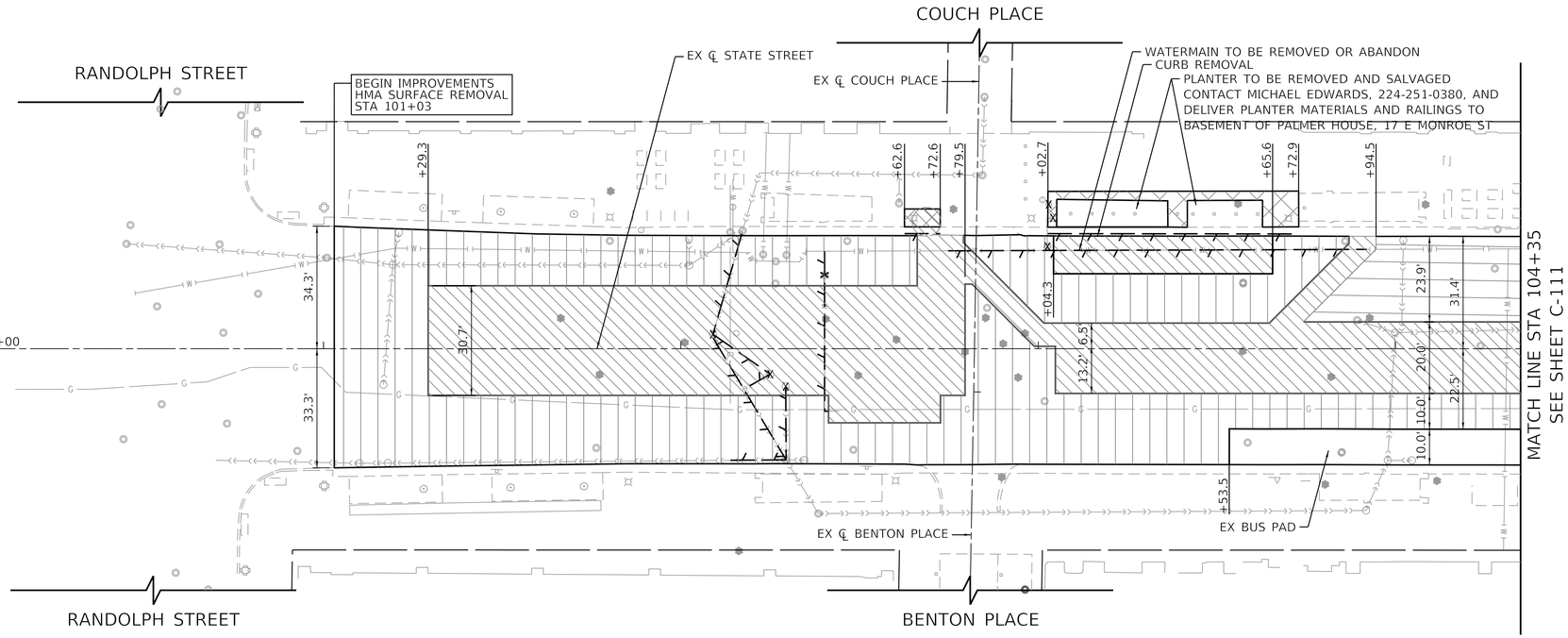

LEGEND

- PAVEMENT MILLING
- FULL-DEPTH PAVEMENT REMOVAL
- SIDEWALK REMOVAL
- REMOVE AND REINSTALL PAVERS SEE LANDSCAPING SHEETS
- SIDEWALK VAULT REMOVAL (SEE STRUCTURAL SHEETS)
- WATER MAIN REMOVAL OR TO BE ABANDONED
- STORM SEWER REMOVAL OR TO BE FILLED
- LINEAR REMOVAL
- x — ITEM TO BE REMOVED
- x — LIGHT POLE TO BE REMOVED SEE E-182 FOR DETAILS

NOTES

1. SEE SHEETS C-101 TO C-103 FOR EXISTING CONDITIONS.
2. CONTRACTOR TO PROTECT ADJACENT PAVEMENTS AND STRUCTURES NOT BEING REMOVED. ANY DAMAGE TO BE REPAIRED AT THE CONTRACTOR'S EXPENSE.
3. CONTRACTOR MUST PROTECT ALL EXISTING UTILITIES TO REMAIN AND EXISTING UTILITIES TO BE DEMOLISHED UNTIL THEY ARE SCHEDULED TO BE DEMOLISHED TO THE APPROVAL OF THE COMMISSIONER.
4. THE CONTRACTOR IS RESPONSIBLE FOR MONITORING ADJACENT BUILDINGS AND THE CTA STRUCTURE FOR DAMAGE AND MOVEMENT THROUGHOUT CONSTRUCTION.

N

0 20 40 60
SCALE IN FEET

DESIGN BY:										
DRAWN BY:										
CHECKED BY:										
APPROVED BY:		4	7/3/2023	ISSUED FOR BID	EAD	EAD	MJL			
CDOT/APPROVED BY:		NO.	DATE	REVISIONS	DES.	DRW.	CHK.	DCCO	CDOT	

TRANSYSTEMS
222 SOUTH RIVERSIDE PLAZA SUITE 610
CHICAGO, ILLINOIS 60606

SKIDMORE, OWINGS & MERRILL LLP
224 SOUTH MICHIGAN AVENUE, SUITE 1000
CHICAGO, ILLINOIS 60604

MICHAEL J. LEU
062-055367
LICENSED PROFESSIONAL ENGINEER
ILLINOIS

CHICAGO DEPARTMENT OF TRANSPORTATION
DIVISION OF ENGINEERING

STATE / LAKE LOOP ELEVATED STATION
200 NORTH STATE STREET, CHICAGO, IL 60601

SPEC. NO.

DEMOLITION PLAN
STATE STREET

DRAWING NO.
C-113

CDOT PROJECT D-1-209 | DATE: 7/3/2023 | REVISION NO.

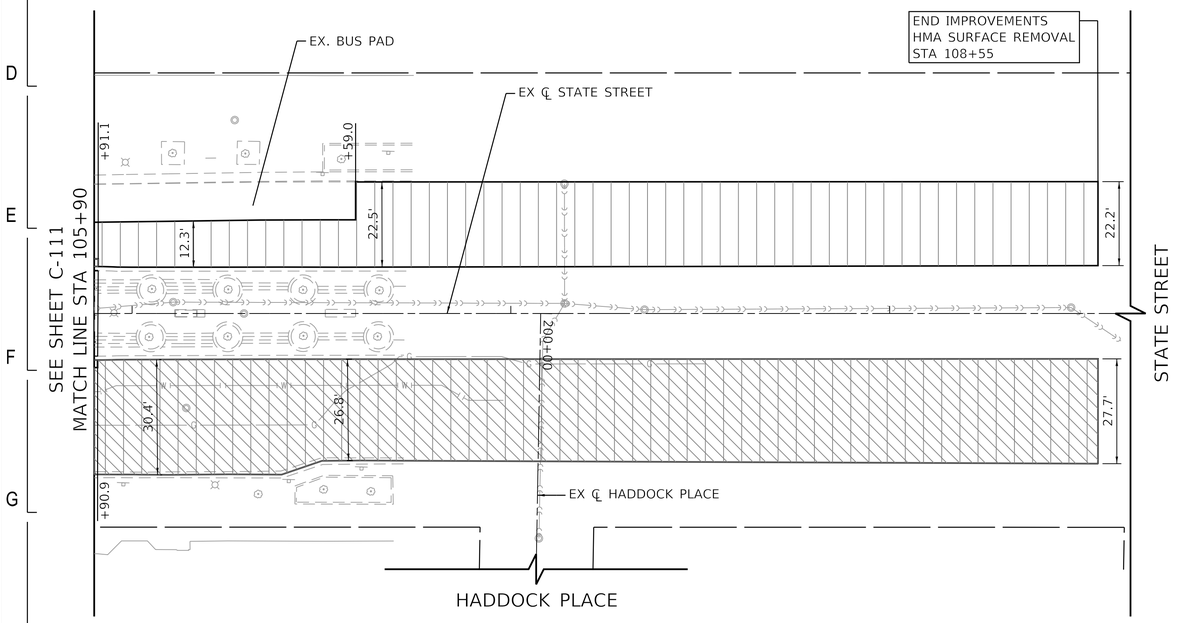

LEGEND

- PAVEMENT MILLING
- FULL-DEPTH PAVEMENT REMOVAL
- SIDEWALK REMOVAL
- REMOVE AND REINSTALL PAVERS SEE LANDSCAPING SHEETS
- SIDEWALK VAULT REMOVAL (SEE STRUCTURAL SHEETS)
- WATER MAIN REMOVAL OR TO BE ABANDONED
- STORM SEWER REMOVAL OR TO BE FILLED
- LINEAR REMOVAL
- X ITEM TO BE REMOVED
- X LIGHT POLE TO BE REMOVED SEE E-182 FOR DETAILS

NOTES

1. SEE SHEETS C-101 TO C-103 FOR EXISTING CONDITIONS.
2. CONTRACTOR TO PROTECT ADJACENT PAVEMENTS AND STRUCTURES NOT BEING REMOVED. ANY DAMAGE TO BE REPAIRED AT THE CONTRACTOR'S EXPENSE.
3. CONTRACTOR MUST PROTECT ALL EXISTING UTILITIES TO REMAIN AND EXISTING UTILITIES TO BE DEMOLISHED UNTIL THEY ARE SCHEDULED TO BE DEMOLISHED TO THE APPROVAL OF THE COMMISSIONER.
4. THE CONTRACTOR IS RESPONSIBLE FOR MONITORING ADJACENT BUILDINGS AND THE CTA STRUCTURE FOR DAMAGE AND MOVEMENT THROUGHOUT CONSTRUCTION.

N

0 20 40 60
SCALE IN FEET

DESIGN BY:										
DRAWN BY:										
CHECKED BY:										
APPROVED BY:		4	7/3/2023	ISSUED FOR BID	EAD	EAD	MJL			
CDOT/APPROVED BY:		NO.	DATE	REVISIONS	DES.	DRW.	CHK.	DCCO	CDOT	

TRANSYSTEMS
222 SOUTH RIVERSIDE PLAZA SUITE 610
CHICAGO, ILLINOIS 60606

SKIDMORE, OWINGS & MERRILL LLP
224 SOUTH MICHIGAN AVENUE, SUITE 1000
CHICAGO, ILLINOIS 60604

MICHAEL J. LEV
062-055367
LICENSED PROFESSIONAL ENGINEER
ILLINOIS

CHICAGO DEPARTMENT OF TRANSPORTATION
DIVISION OF ENGINEERING

STATE / LAKE LOOP ELEVATED STATION
200 NORTH STATE STREET, CHICAGO, IL 60601

SPEC. NO.

DEMOLITION PLAN
STATE STREET

DRAWING NO.
C-114

CDOT PROJECT D-1-209

DATE: 7/3/2023

REVISION NO.

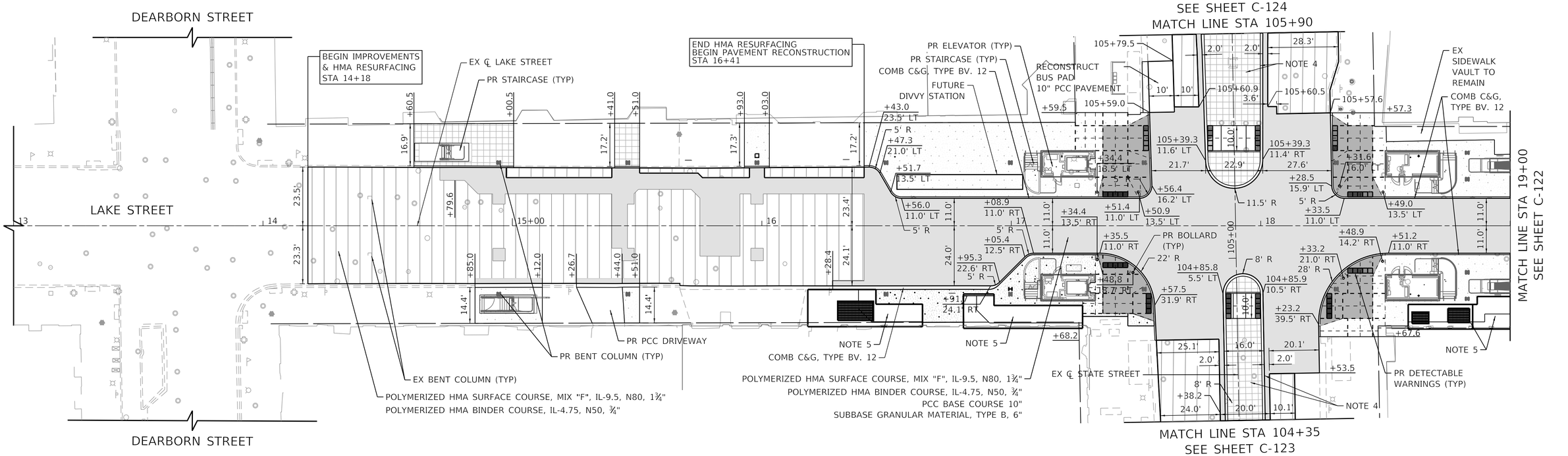

LEGEND

- OVERLAY
- FULL-DEPTH PAVEMENT
- PAVERS (SEE LANDSCAPE SHEETS)
- 5" PCC SIDEWALK
- 8" PCC SIDEWALK

NOTES

1. FOR EXISTING CONDITIONS, SEE SHEETS C-101 TO C-103.
2. FOR DEMOLITION PLAN, SEE SHEETS C-111 TO C-114.
3. FOR ADA DETAILS, SEE SHEETS C-501 TO C-504.
4. FOR PAVER INFORMATION AND MEDIAN DETAILS, SEE LANDSCAPE SHEETS.
5. FOR VAULTED SIDEWALK FILLING DETAILS, SEE STRUCTURAL SHEETS
6. ADJUST ALL EXISTING STRUCTURES WITHIN THE FULL DEPTH PAVING LIMITS TO GRADE
7. SEE SHEETS A-111 TO A-113 FOR LOCATIONS OF SIDEWALK INSET COMPASS ROSES.

N

0 20 40 60
SCALE IN FEET

DESIGN BY:									
DRAWN BY:									
CHECKED BY:									
APPROVED BY:		4	7/3/2023	ISSUED FOR BID	AMK	AMK	ZMZ		
CDOT/APPROVED BY:		NO.	DATE	REVISIONS	DES.	DRW.	CHK.	DCCO	CDOT

TRANSYSTEMS
222 SOUTH RIVERSIDE PLAZA SUITE 610
CHICAGO, ILLINOIS 60606

SKIDMORE, OWINGS & MERRILL LLP
224 SOUTH MICHIGAN AVENUE, SUITE 1000
CHICAGO, ILLINOIS 60604

MICHAEL J. LEV
062-055367
LICENSED PROFESSIONAL ENGINEER
STATE OF ILLINOIS

CHICAGO DEPARTMENT OF TRANSPORTATION
DIVISION OF ENGINEERING

STATE / LAKE LOOP ELEVATED STATION
200 NORTH STATE STREET, CHICAGO, IL 60601

PROPOSED IMPROVEMENTS
LAKE STREET

CDOT PROJECT D-1-209 | DATE: 7/3/2023

SPEC. NO.

DRAWING NO. C-121

REVISION NO.

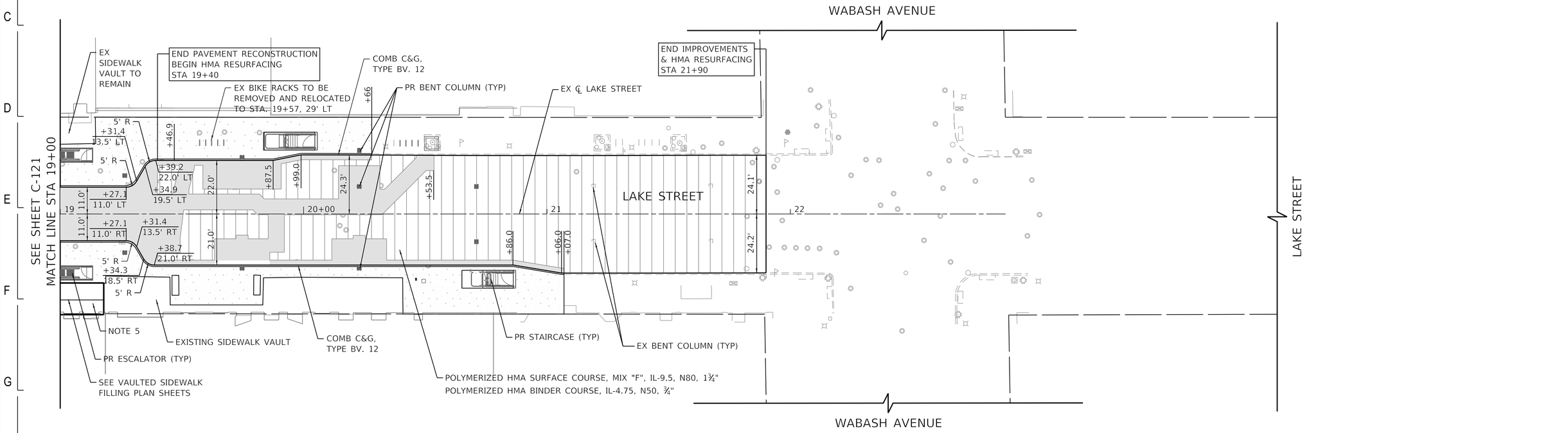

LEGEND

- OVERLAY
- FULL-DEPTH PAVEMENT
- PAVERS (SEE LANDSCAPE SHEETS)
- 5" PCC SIDEWALK
- 8" PCC SIDEWALK

NOTES

1. FOR EXISTING CONDITIONS, SEE SHEETS C-101 TO C-103.
2. FOR DEMOLITION PLAN, SEE SHEETS C-111 TO C-114.
3. FOR ADA DETAILS, SEE SHEETS C-501 TO C-504.
4. FOR PAVER INFORMATION AND MEDIAN DETAILS, SEE LANDSCAPE SHEETS.
5. FOR VAULTED SIDEWALK FILLING DETAILS, SEE STRUCTURAL SHEETS
6. ADJUST ALL EXISTING STRUCTURES WITHIN THE FULL DEPTH PAVING LIMITS TO GRADE
7. SEE SHEETS A-111 TO A-113 FOR LOCATIONS OF SIDEWALK INSET COMPASS ROSES.

N

0 20 40 60
SCALE IN FEET

DESIGN BY:									
DRAWN BY:									
CHECKED BY:									
APPROVED BY:		4	7/3/2023	ISSUED FOR BID	AMK	AMK	ZMZ		
CDOT/APPROVED BY:		NO.	DATE	REVISIONS	DES.	DRW.	CHK.	DCCO	CDOT

TRANSYSTEMS
222 SOUTH RIVERSIDE PLAZA SUITE 610
CHICAGO, ILLINOIS 60606

SKIDMORE, OWINGS & MERRILL LLP
224 SOUTH MICHIGAN AVENUE, SUITE 1000
CHICAGO, ILLINOIS 60604

MICHAEL J. LEY
062-055367
LICENSED PROFESSIONAL ENGINEER
ILLINOIS

CHICAGO DEPARTMENT OF TRANSPORTATION
DIVISION OF ENGINEERING

STATE / LAKE LOOP ELEVATED STATION
200 NORTH STATE STREET, CHICAGO, IL 60601

PROPOSED IMPROVEMENTS
LAKE STREET

SPEC. NO.

DRAWING NO.
C-122

CDOT PROJECT D-1-209

DATE: 7/3/2023

REVISION NO.

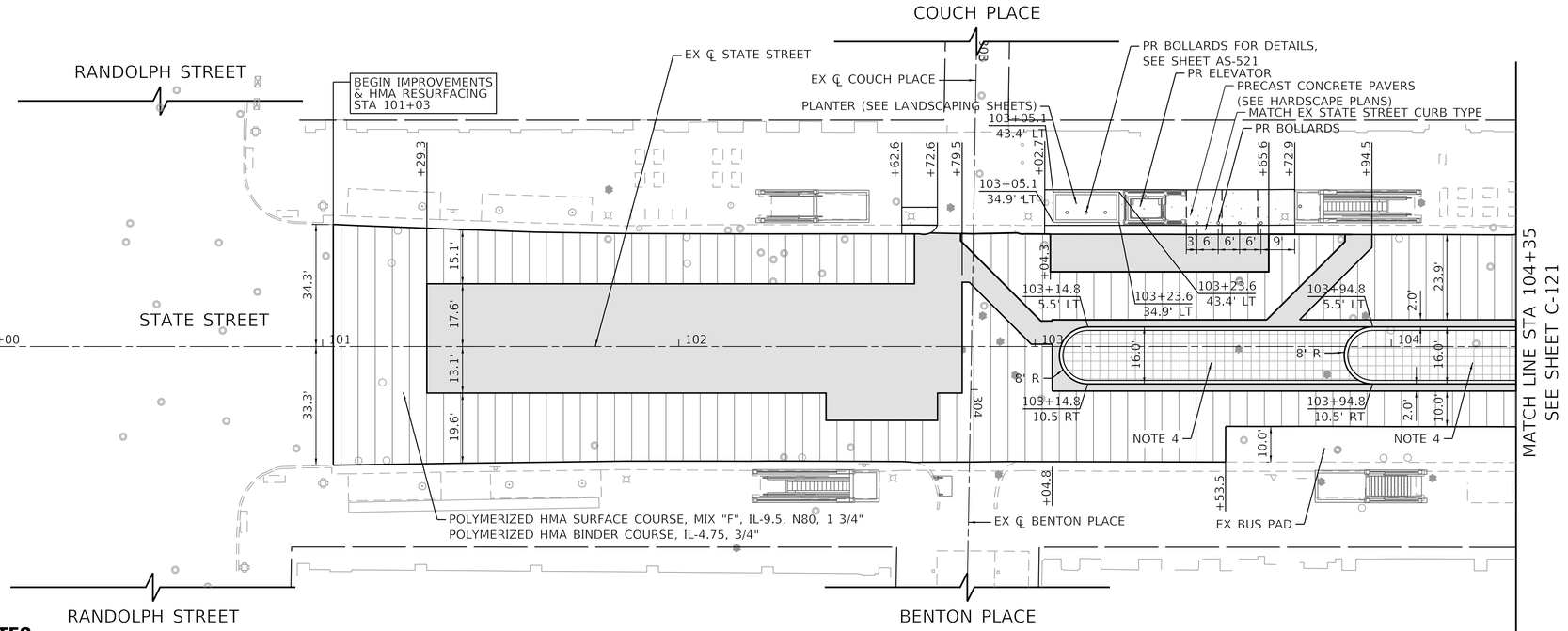

LEGEND

- OVERLAY
- FULL-DEPTH PAVEMENT
- PAVERS (SEE LANDSCAPE SHEETS)
- 5" PCC SIDEWALK
- 8" PCC SIDEWALK

NOTES

1. FOR EXISTING CONDITIONS, SEE SHEETS C-101 TO C-103.
2. FOR DEMOLITION PLAN, SEE SHEETS C-111 TO C-114.
3. FOR ADA DETAILS, SEE SHEETS C-501 TO C-504.
4. FOR PAVER INFORMATION AND MEDIAN DETAILS, SEE LANDSCAPE SHEETS.
5. FOR VAULTED SIDEWALK FILLING DETAILS, SEE STRUCTURAL SHEETS
6. ADJUST ALL EXISTING STRUCTURES WITHIN THE FULL DEPTH PAVING LIMITS TO GRADE
7. SEE SHEETS A-111 TO A-113 FOR LOCATIONS OF SIDEWALK INSET COMPASS ROSES.

N

0 20 40 60
SCALE IN FEET

DESIGN BY:										
DRAWN BY:										
CHECKED BY:										
APPROVED BY:		4	7/3/2023	ISSUED FOR BID	EAD	EAD	MJL		
CDOT/APPROVED BY:		NO.	DATE	REVISIONS	DES.	DRW.	CHK.	DCCO	CDOT

TRANSYSTEMS
222 SOUTH RIVERSIDE PLAZA SUITE 610
CHICAGO, ILLINOIS 60606

SKIDMORE, OWINGS & MERRILL LLP
224 SOUTH MICHIGAN AVENUE, SUITE 1000
CHICAGO, ILLINOIS 60604

MICHAEL J. LEVI 062-055367 LICENSED PROFESSIONAL ENGINEER STATE OF ILLINOIS

CHICAGO DEPARTMENT OF TRANSPORTATION
DIVISION OF ENGINEERING

STATE / LAKE LOOP ELEVATED STATION
200 NORTH STATE STREET, CHICAGO, IL 60601

PROPOSED IMPROVEMENTS
STATE STREET

CDOT PROJECT D-1-209 | DATE: 7/3/2023

SPEC. NO.

DRAWING NO. C-123

REVISION NO.

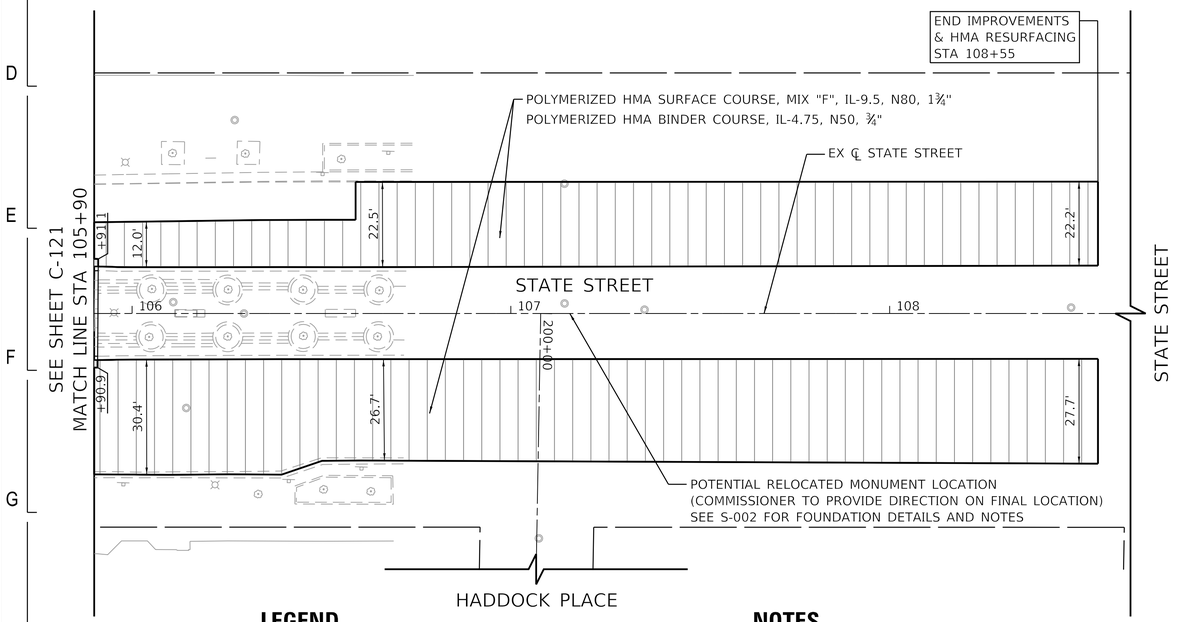

LEGEND

- OVERLAY
- FULL-DEPTH PAVEMENT
- PAVERS (SEE LANDSCAPE SHEETS)
- 5" PCC SIDEWALK
- 8" PCC SIDEWALK

NOTES

1. FOR EXISTING CONDITIONS, SEE SHEETS C-101 TO C-103.
2. FOR DEMOLITION PLAN, SEE SHEETS C-111 TO C-114.
3. FOR ADA DETAILS, SEE SHEETS C-501 TO C-504.
4. FOR PAVER INFORMATION AND MEDIAN DETAILS, SEE LANDSCAPE SHEETS.
5. FOR VAULTED SIDEWALK FILLING DETAILS, SEE STRUCTURAL SHEETS
6. ADJUST ALL EXISTING STRUCTURES WITHIN THE FULL DEPTH PAVING LIMITS TO GRADE
7. SEE SHEETS A-111 TO A-113 FOR LOCATIONS OF SIDEWALK INSET COMPASS ROSES.

N

0 20 40 60
SCALE IN FEET

DESIGN BY:										
DRAWN BY:										
CHECKED BY:										
APPROVED BY:		4	7/3/2023	ISSUED FOR BID	EAD	EAD	MJL			
CDOT/APPROVED BY:		NO.	DATE	REVISIONS	DES.	DRW.	CHK.	DCCO	CDOT	

TranSystems
TRANSYSTEMS
222 SOUTH RIVERSIDE PLAZA SUITE 610
CHICAGO, ILLINOIS 60606

SOM
SKIDMORE, OWINGS & MERRILL LLP
224 SOUTH MICHIGAN AVENUE, SUITE 1000
CHICAGO, ILLINOIS 60604

MICHAEL J. LEV
062-055367
LICENSED PROFESSIONAL ENGINEER
ILLINOIS

CDOT
CHICAGO DEPARTMENT OF TRANSPORTATION
DIVISION OF ENGINEERING

STATE / LAKE LOOP ELEVATED STATION
200 NORTH STATE STREET, CHICAGO, IL 60601

SPEC. NO.

PROPOSED IMPROVEMENTS
STATE STREET

DRAWING NO.
C-124

CDOT PROJECT D-1-209

DATE: 7/3/2023

REVISION NO.

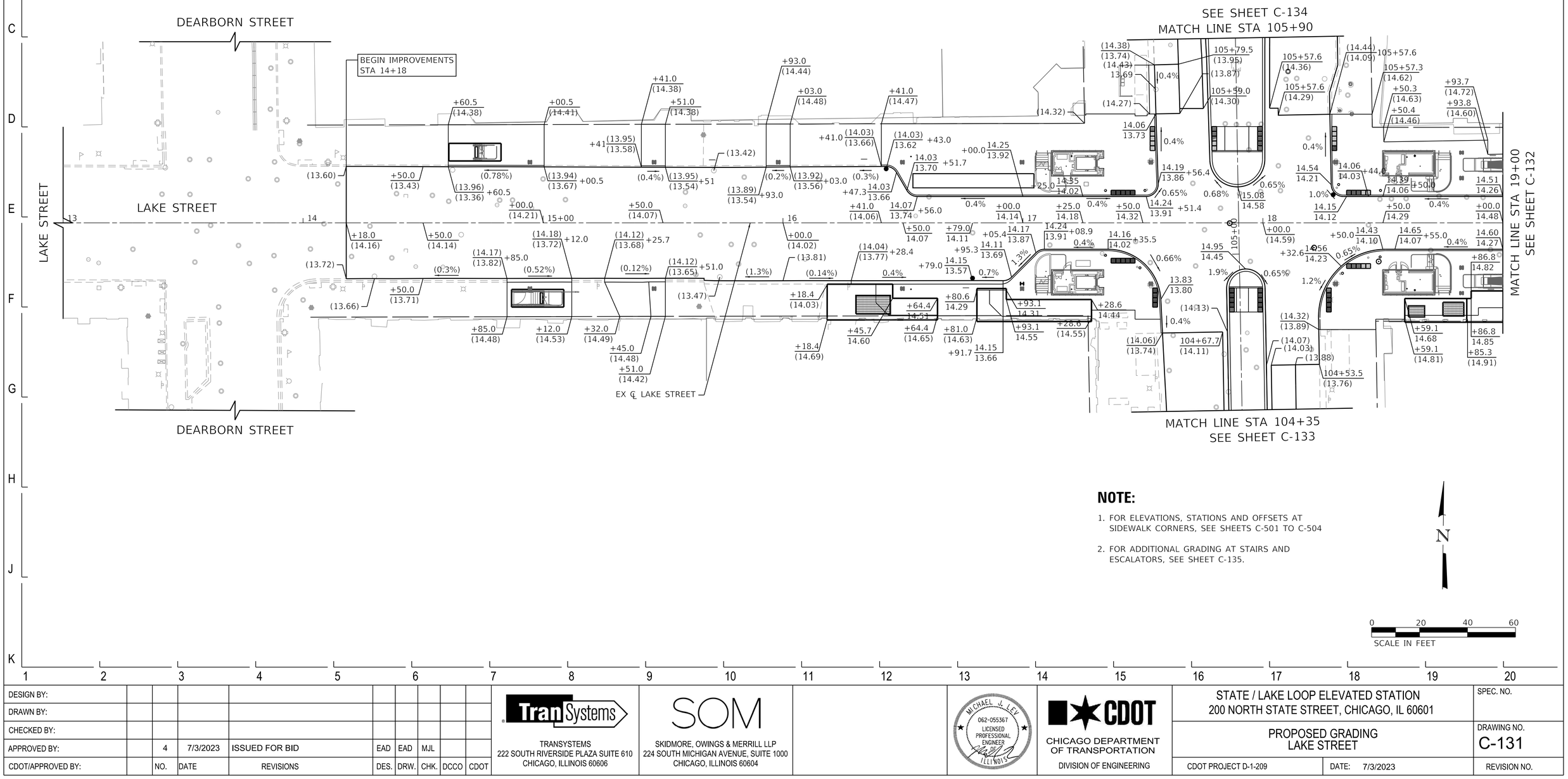

NOTE:

1. FOR ELEVATIONS, STATIONS AND OFFSETS AT SIDEWALK CORNERS, SEE SHEETS C-501 TO C-504
2. FOR ADDITIONAL GRADING AT STAIRS AND ESCALATORS, SEE SHEET C-135.

N

0 20 40 60
SCALE IN FEET

DESIGN BY:										
DRAWN BY:										
CHECKED BY:										
APPROVED BY:		4	7/3/2023	ISSUED FOR BID	EAD	EAD	MJL			
CDOT/APPROVED BY:		NO.	DATE	REVISIONS	DES.	DRW.	CHK.	DCCO	CDOT	

TRANSYSTEMS
222 SOUTH RIVERSIDE PLAZA SUITE 610
CHICAGO, ILLINOIS 60606

SKIDMORE, OWINGS & MERRILL LLP
224 SOUTH MICHIGAN AVENUE, SUITE 1000
CHICAGO, ILLINOIS 60604

MICHAEL J. LEV
062-055367
LICENSED PROFESSIONAL ENGINEER
ILLINOIS

CHICAGO DEPARTMENT OF TRANSPORTATION
DIVISION OF ENGINEERING

STATE / LAKE LOOP ELEVATED STATION
200 NORTH STATE STREET, CHICAGO, IL 60601

PROPOSED GRADING
LAKE STREET

CDOT PROJECT D-1-209

DATE: 7/3/2023

SPEC. NO.

DRAWING NO.
C-131

REVISION NO.

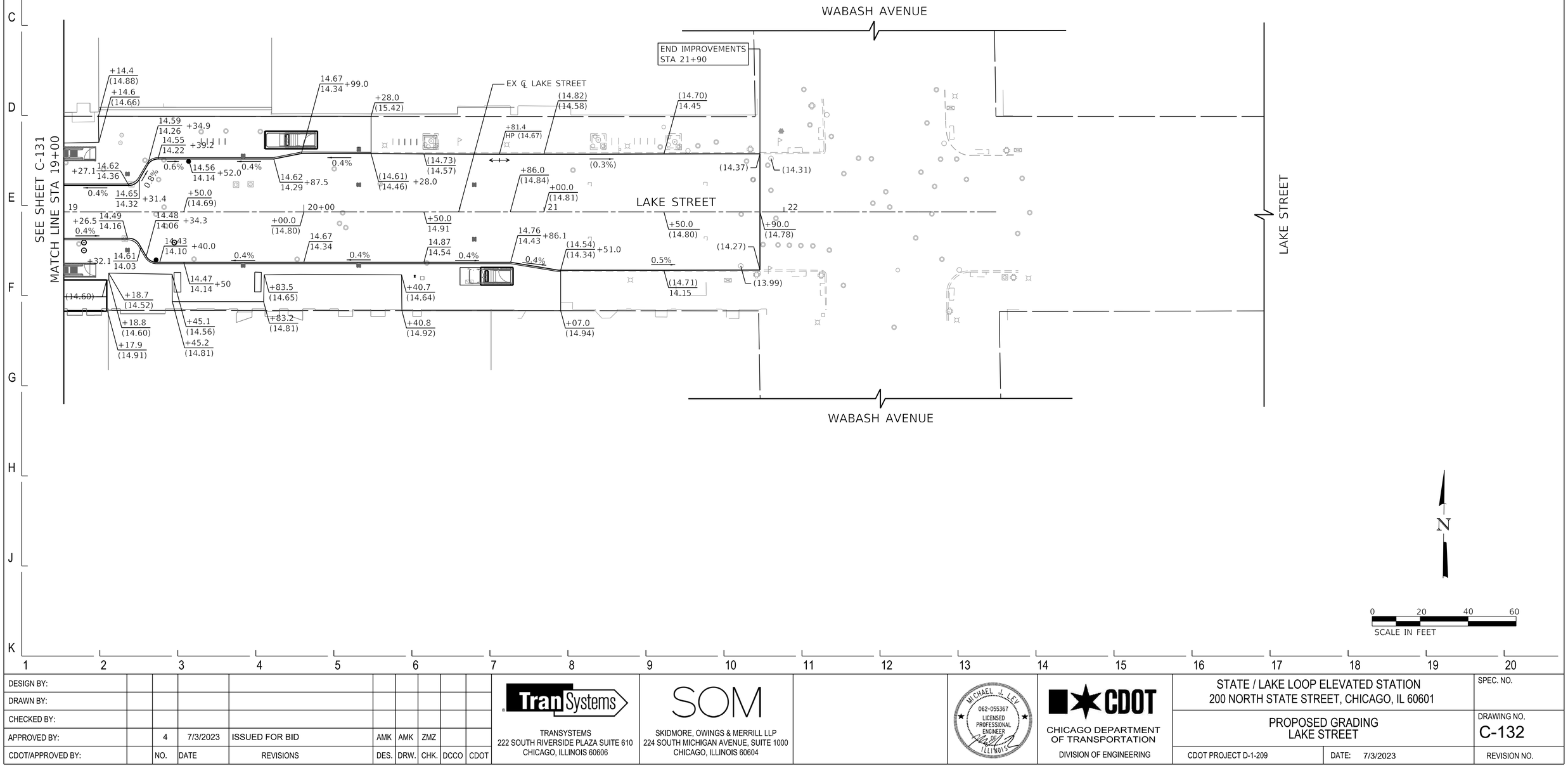

DESIGN BY:										
DRAWN BY:										
CHECKED BY:										
APPROVED BY:		4	7/3/2023	ISSUED FOR BID	AMK	AMK	ZMZ			
CDOT/APPROVED BY:		NO.	DATE	REVISIONS	DES.	DRW.	CHK.	DCCO	CDOT	

TRANSYSTEMS
222 SOUTH RIVERSIDE PLAZA SUITE 610
CHICAGO, ILLINOIS 60606

SKIDMORE, OWINGS & MERRILL LLP
224 SOUTH MICHIGAN AVENUE, SUITE 1000
CHICAGO, ILLINOIS 60604

MICHAEL J. LEV
062-055367
LICENSED PROFESSIONAL ENGINEER
ILLINOIS

CHICAGO DEPARTMENT OF TRANSPORTATION
DIVISION OF ENGINEERING

STATE / LAKE LOOP ELEVATED STATION
200 NORTH STATE STREET, CHICAGO, IL 60601

SPEC. NO.

PROPOSED GRADING
LAKE STREET

DRAWING NO.
C-132

CDOT PROJECT D-1-209

DATE: 7/3/2023

REVISION NO.

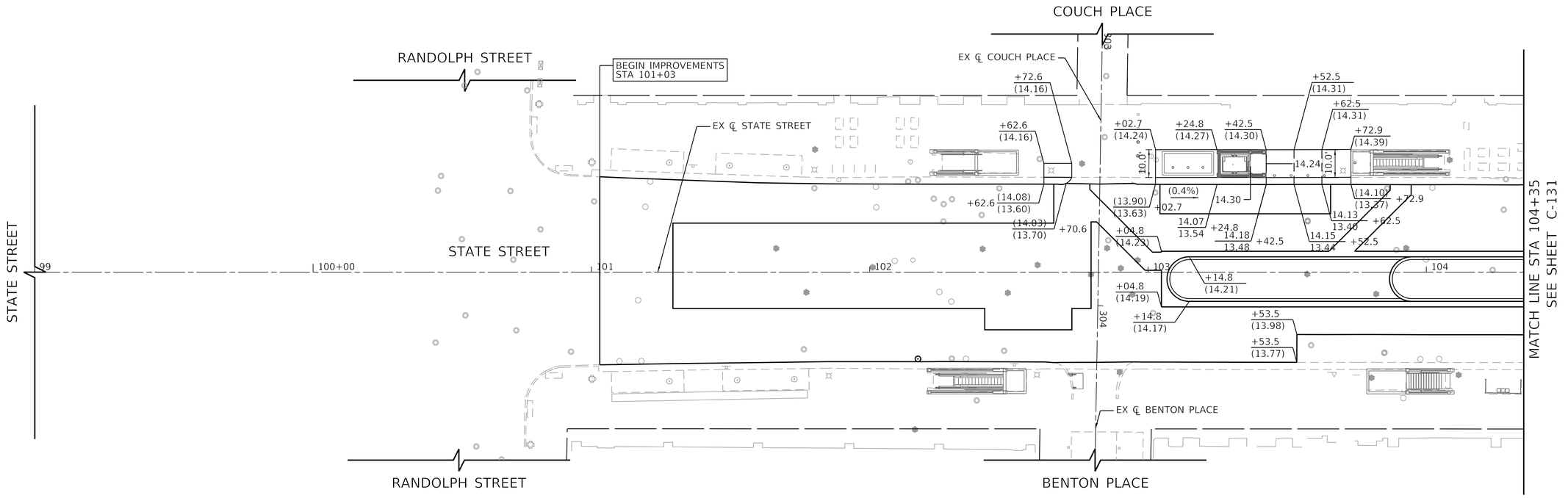

DESIGN BY:										
DRAWN BY:										
CHECKED BY:										
APPROVED BY:		4	7/3/2023	ISSUED FOR BID	EAD	EAD	MJL		
CDOT/APPROVED BY:		NO.	DATE	REVISIONS	DES.	DRW.	CHK.	DCCO	CDOT

TRANSYSTEMS
222 SOUTH RIVERSIDE PLAZA SUITE 610
CHICAGO, ILLINOIS 60606

SKIDMORE, OWINGS & MERRILL LLP
224 SOUTH MICHIGAN AVENUE, SUITE 1000
CHICAGO, ILLINOIS 60604

MICHAEL J. LEV
062-055367
LICENSED PROFESSIONAL ENGINEER
OF ILLINOIS

CHICAGO DEPARTMENT OF TRANSPORTATION
DIVISION OF ENGINEERING

STATE / LAKE LOOP ELEVATED STATION
200 NORTH STATE STREET, CHICAGO, IL 60601

SPEC. NO.

PROPOSED GRADING
STATE STREET

DRAWING NO.
C-133

CDOT PROJECT D-1-209 | DATE: 7/3/2023 | REVISION NO.

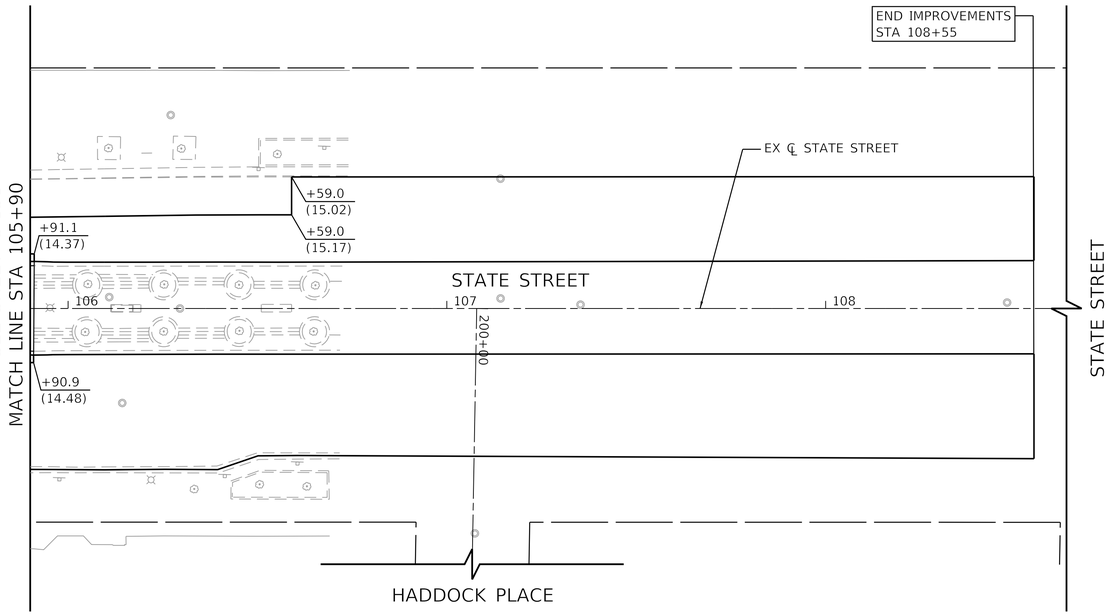

N

0 20 40 60

SCALE IN FEET

DESIGN BY:										
DRAWN BY:										
CHECKED BY:										
APPROVED BY:		4	7/3/2023	ISSUED FOR BID	EAD	EAD	MJL			
CDOT/APPROVED BY:		NO.	DATE	REVISIONS	DES.	DRW.	CHK.	DCCO	CDOT	

TranSystems
TRANSYSTEMS
222 SOUTH RIVERSIDE PLAZA SUITE 610
CHICAGO, ILLINOIS 60606

SOM
SKIDMORE, OWINGS & MERRILL LLP
224 SOUTH MICHIGAN AVENUE, SUITE 1000
CHICAGO, ILLINOIS 60604

MICHAEL J. LEVI
062-055367
LICENSED PROFESSIONAL ENGINEER
ILLINOIS

CDOT
CHICAGO DEPARTMENT OF TRANSPORTATION
DIVISION OF ENGINEERING

STATE / LAKE LOOP ELEVATED STATION
200 NORTH STATE STREET, CHICAGO, IL 60601

SPEC. NO.

PROPOSED GRADING
STATE STREET

DRAWING NO.
C-134

CDOT PROJECT D-1-209

DATE: 7/3/2023

REVISION NO.

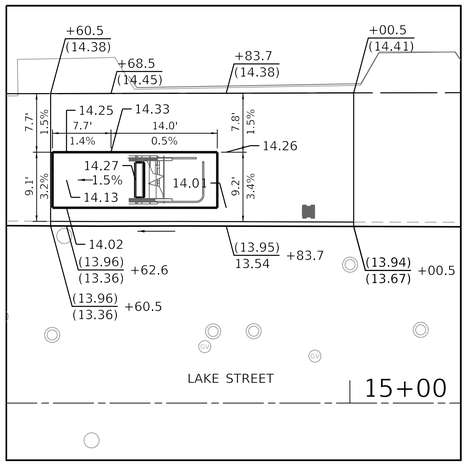

NORTHWEST EGRESS STAIRS

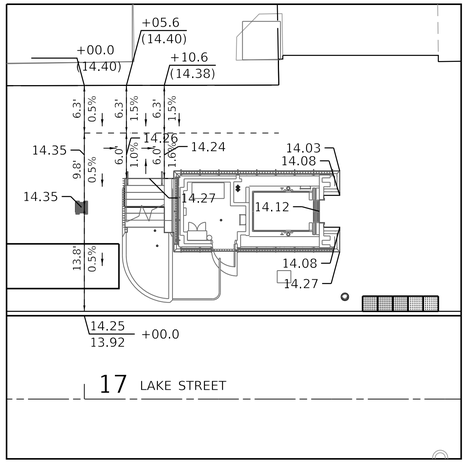

NORTHWEST STAIRS AND ELEVATOR

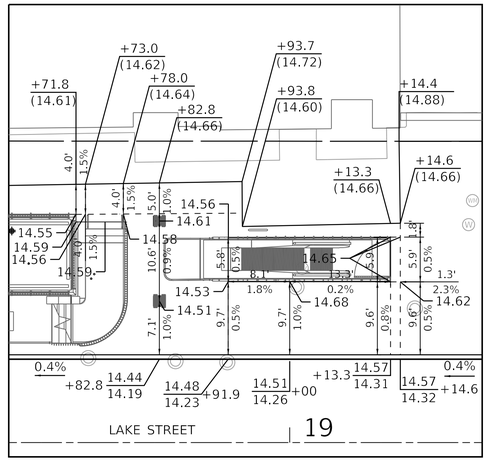

NORTHEAST STAIRS AND ESCALATOR

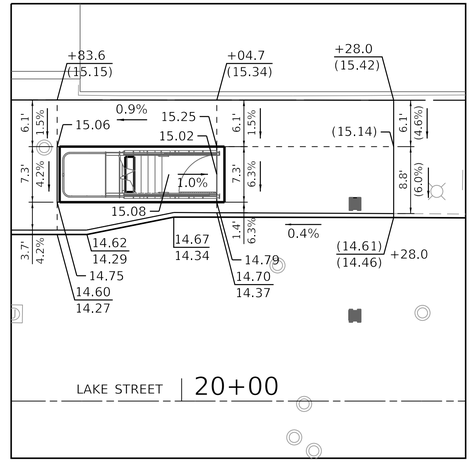

NORTHEAST EGRESS STAIRS

SOUTHWEST EGRESS STAIRS

SOUTHWEST STAIRS AND ELEVATOR

SOUTHEAST STAIRS AND ESCALATOR

SOUTHEAST EGRESS STAIRS

POINT	STA.	OFFSET (FT)	ELEV.
1	18+86.8	28.3' RT	14.82
2	18+86.8	31.5' RT	14.85
3	18+85.3	31.5' RT	14.81
4	18+78.0	31.5' RT	14.78
5	18+78.0	31.0' RT	14.77
6	18+73.0	31.0' RT	14.79
7	18+73.0	31.5' RT	14.80

N

0 10 20 30
SCALE IN FEET

DESIGN BY:										
DRAWN BY:										
CHECKED BY:										
APPROVED BY:		4	7/3/2023	ISSUED FOR BID	EAD	EAD	MJL			
CDOT/APPROVED BY:		NO.	DATE	REVISIONS	DES.	DRW.	CHK.	DCCO	CDOT	

TRANSYSTEMS
222 SOUTH RIVERSIDE PLAZA SUITE 610
CHICAGO, ILLINOIS 60606

SKIDMORE, OWINGS & MERRILL LLP
224 SOUTH MICHIGAN AVENUE, SUITE 1000
CHICAGO, ILLINOIS 60604

MICHAEL J. LEVI
062-055367
LICENSED PROFESSIONAL ENGINEER
ILLINOIS

CDOT
CHICAGO DEPARTMENT OF TRANSPORTATION
DIVISION OF ENGINEERING

STATE / LAKE LOOP ELEVATED STATION
200 NORTH STATE STREET, CHICAGO, IL 60601

PROPOSED GRADING DETAILS

SPEC. NO.

DRAWING NO. C-135

CDOT PROJECT D-1-209

DATE: 7/3/2023

REVISION NO.

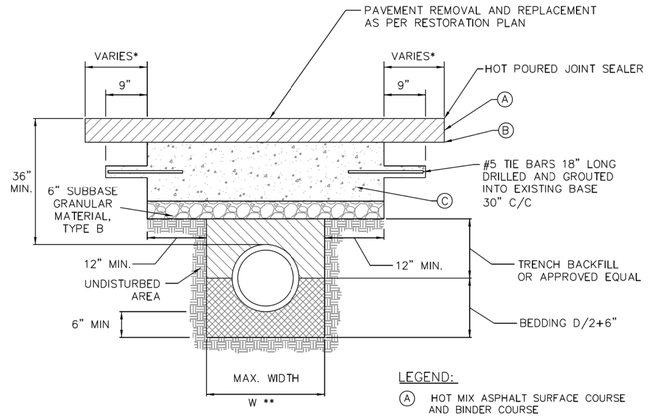

* PAVEMENT SHALL BE REMOVED & REPAVED TO NEAREST CONSTRUCTION JOINT IF TRENCH EDGE IS 5' OR LESS FROM JOINT. (OR AS REQUIRED BY THE COMMISSIONER)

** W = 9" + O.D. +9", WHEN TRENCH DEPTH ≤ 5 FT.
W = 18" + O.D. + 18", WHEN TRENCH DEPTH > 5 FT.

NOTES:

1. THE PORTLAND CEMENT CONCRETE BASE SHALL BE 8" OR MORE (SEE SECTION 4.2b FOR REQUIRED THICKNESS). FOR CONCRETE STREETS THE CONCRETE SHALL BE BROUGHT TO GRADE (INCLUDING 1'-0" OVERLAP) AND FINISHED AS REQUIRED IN THE IDOT SSRBC.
2. ALL EXISTING PAVEMENTS SHALL BE SAW CUT 1'-0" ON BOTH SIDES OF THE TRENCH OR PAVEMENT OPENING. UNDER NO CIRCUMSTANCES SHOULD EXISTING PAVEMENT, WHICH HAS BEEN UNDERMINED OR OTHERWISE DISTURBED, BE LEFT IN PLACE AND NOT RESTORED.
3. ALL STREET PAVEMENT WILL REQUIRE PLACEMENT OF #5 TIE BARS, 18 INCHES LONG DRILLED AND GROUTED (NON SHRINK) AT 30" CENTERS ON ALL SIDES. A MINIMUM OF TWO TIE BARS WILL BE REQUIRED ON EACH SIDE OF SAW CUT BOUNDARIES.
4. ALL TIE BARS AND DOWEL BARS ARE TO BE EPOXY COATED (INCIDENTAL).

CDOT CHICAGO DEPARTMENT OF TRANSPORTATION

DATE	REVISION	CITY OF CHICAGO		
1/1/2014	REVISION 1	STREET PAVEMENT RESTORATION DETAIL WITH TRENCH BACKFILL		
1/27/2016	REVISION 2			
		DATE	SHEET	DRAWN BY
		12/12/06	A-2-2A	CDOT

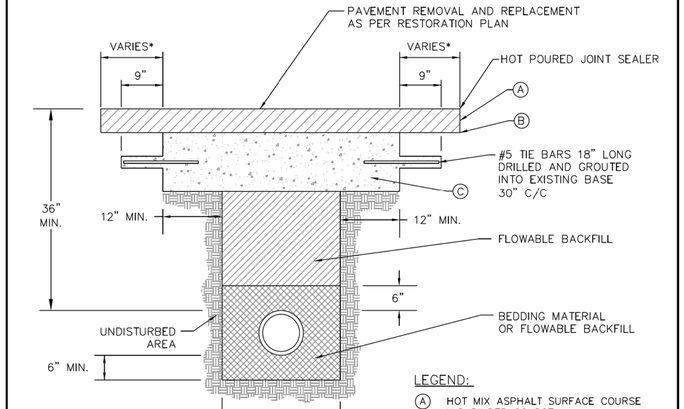

* PAVEMENT SHALL BE REMOVED & REPAVED TO NEAREST CONSTRUCTION JOINT IF TRENCH EDGE IS 5' OR LESS FROM JOINT. (OR AS REQUIRED BY THE COMMISSIONER)

** W = 9" + O.D. +9", WHEN TRENCH DEPTH ≤ 5 FT.
W = 18" + O.D. + 18", WHEN TRENCH DEPTH > 5 FT.

NOTES:

1. THE PORTLAND CEMENT CONCRETE BASE SHALL BE 8" OR MORE (SEE SECTION 4.2b FOR REQUIRED THICKNESS). FOR CONCRETE STREETS THE CONCRETE SHALL BE BROUGHT TO GRADE (INCLUDING 1'-0" OVERLAP) AND FINISHED AS REQUIRED IN THE IDOT SSRBC.
2. ALL EXISTING PAVEMENTS SHALL BE SAW CUT 1'-0" ON BOTH SIDES OF THE TRENCH OR PAVEMENT OPENING. UNDER NO CIRCUMSTANCES SHOULD EXISTING PAVEMENT, WHICH HAS BEEN UNDERMINED OR OTHERWISE DISTURBED, BE LEFT IN PLACE AND NOT RESTORED.
3. ALL STREET PAVEMENT WILL REQUIRE PLACEMENT OF #5 TIE BARS, 18 INCHES LONG DRILLED AND GROUTED (NON SHRINK) AT 30" CENTERS ON ALL SIDES. A MINIMUM OF TWO TIE BARS WILL BE REQUIRED ON EACH SIDE OF SAW CUT BOUNDARIES.
4. ALL TIE BARS AND DOWEL BARS ARE TO BE EPOXY COATED (INCIDENTAL).

CDOT CHICAGO DEPARTMENT OF TRANSPORTATION

DATE	REVISION	CITY OF CHICAGO		
1/1/2014	REVISION 1	STREET PAVEMENT RESTORATION DETAIL WITH FLOWABLE FILL		
1/27/2016	REVISION 2			
		DATE	SHEET	DRAWN BY
		01/11/07	A-2-2B	CDOT

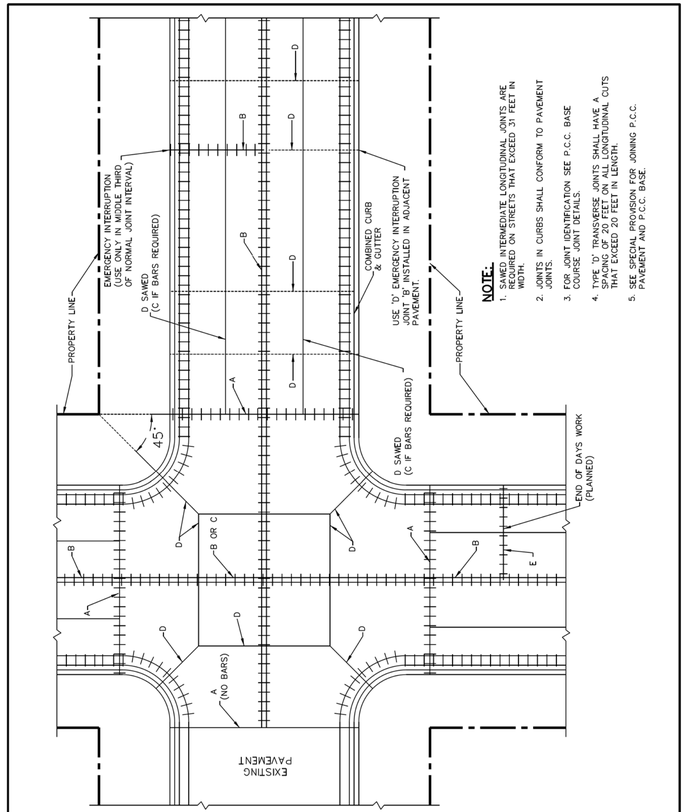

CDOT CHICAGO DEPARTMENT OF TRANSPORTATION

DATE	REVISION	CITY OF CHICAGO		
1/1/2014	REVISION 1	TYPICAL JOINT LAYOUT FOR P.C. CONCRETE PAVEMENTS		
		DATE	SHEET	DRAWN BY
		12/26/06	A-2-3A	CDOT

DESIGN BY:										
DRAWN BY:										
CHECKED BY:										
APPROVED BY:		4	7/3/2023	ISSUED FOR BID						
CDOT/APPROVED BY:		NO.	DATE	REVISIONS	DES.	DRW.	CHK.	DCCO	CDOT	

TranSystems
TRANSYSTEMS
222 SOUTH RIVERSIDE PLAZA SUITE 610
CHICAGO, ILLINOIS 60606

SOM
SKIDMORE, OWINGS & MERRILL LLP
224 SOUTH MICHIGAN AVENUE, SUITE 1000
CHICAGO, ILLINOIS 60604

MICHAEL J. LEV
062-055367
LICENSED PROFESSIONAL ENGINEER
ILLINOIS

CDOT
CHICAGO DEPARTMENT OF TRANSPORTATION
DIVISION OF ENGINEERING

STATE / LAKE LOOP ELEVATED STATION
200 NORTH STATE STREET, CHICAGO, IL 60601

SPEC. NO.

CIVIL DETAILS

DRAWING NO.
C-141

CDOT PROJECT D-1-209

DATE: 7/3/2023

REVISION NO.

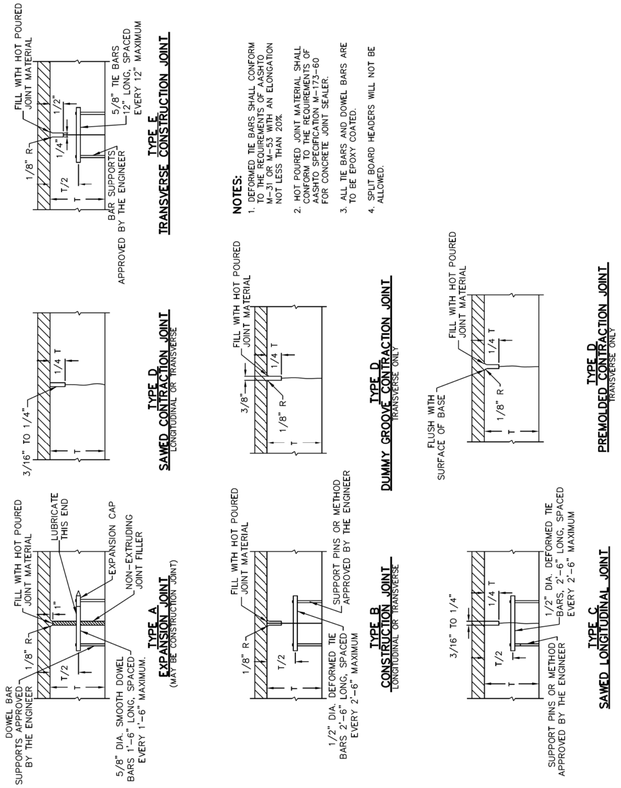

CDOT CHICAGO DEPARTMENT OF TRANSPORTATION	DATE	REVISION	CITY OF CHICAGO
	1/1/2014	REVISION 1	P.C.C. BASE COURSE JOINT DETAILS
			DATE: 12/27/06 · SHEET: A-2-3C · DRAWN BY: CDOT

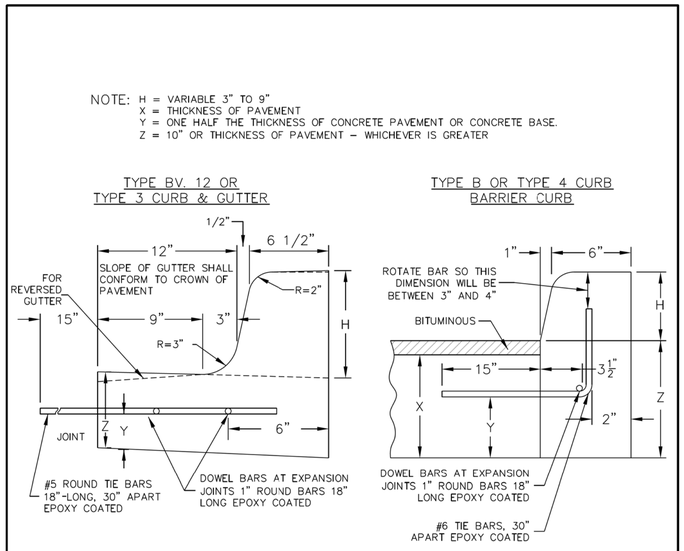

JOINTS IN CURB, COMBINED CURB & GUTTER

TRANSVERSE JOINTS OF A TYPE SIMILAR TO THAT USED IN THE ADJACENT PAVEMENT SHALL BE INSTALLED IN THE CURB, GUTTER AND COMBINED CURB & GUTTER IN PROLONGATION WITH THE JOINTS IN THE PAVEMENT. THE DETAILS OF THE TRANSVERSE JOINTS IN THE CURB, GUTTER AND COMBINED CURB & GUTTER SHALL BE APPROVED BY THE COMMISSIONER. CURB, GUTTER OR COMBINED CURB & GUTTER IS CONSTRUCTED ADJACENT TO A FLEXIBLE BASE PAVEMENT, 1" THICK EXPANSION JOINTS COMPOSED OF BITUMINOUS PERFORMED JOINT FILLER SHALL BE INSTALLED IN THE CURB AND/OR GUTTER AT POINTS OF CURVATURE AND AT CONSTRUCTION JOINTS. CONTRACTION JOINTS SHALL ALSO BE PLACED BETWEEN THESE EXPANSION JOINTS AT DISTANCES NOT EXCEEDING 20 FEET. ALL TIE BARS SHALL BE DEFORMED–ALL DOWEL BARS SHALL BE SMOOTH.

NOTE: ALL TIE BARS AND DOWEL BARS TO BE EPOXY COATED.

*AT LOCATIONS REQUIRING DEPRESSED CURBS SEE THE ADA STANDARDS FOR CONSTRUCTION DETAILS

CDOT CHICAGO DEPARTMENT OF TRANSPORTATION	DATE	REVISION	CITY OF CHICAGO
	1/1/2014	REVISION 1	CONCRETE CURB & GUTTER DETAIL
			DATE: 12/12/06 · SHEET: A-2-6 · DRAWN BY: CDOT

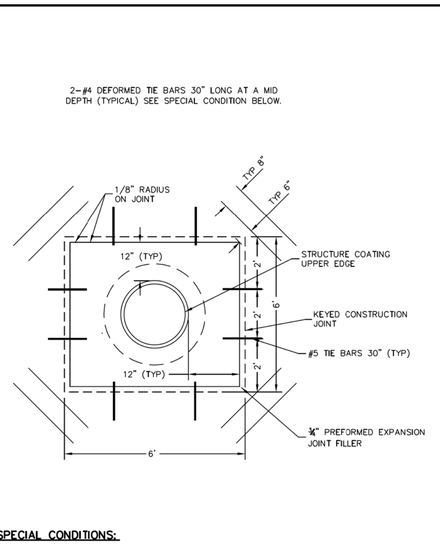

SPECIAL CONDITIONS:

TIE BARS SHALL NOT BE INSTALLED AT ISOLATION BOX CORNERS WHERE EITHER SIDE OF THE BOX FORMING SAID CORNER IS A LONGITUDINAL OR TRAVERSE JOINT. MOREOVER, AT NO TIME SHALL A TIE BAR CROSS A JOINT (ALREADY FORMED OR PROPOSED) IN THE VICINITY OF THE ISOLATION BOX. IF THIS SITUATION OCCURS, THE TIE BAR SHALL BE ADJUSTED PARALLEL TO THE AXIS OF THE BAR SO THAT THE END OF THE BAR IS NO CLOSER THAN 1 1/2" TO THE JOINT.

ONLY BY THE DIRECTION OR APPROVAL OF THE COMMISSIONER SHALL THE DISTANCE BETWEEN THE UPPER EXTERNAL CASTING EDGE AND THE EDGE OF STANDARD ISOLATION BOX, SHOWN AS 12", BE INCREASED SO THAT AN IMMOVABLE LONGITUDINAL JOINT AND (OR) TRAVERSE JOINT WILL THEN THENCE FORM (O) SIDE (S) OF THE BOX. THIS ADJUSTMENT WILL BE ALLOWED ONLY WHEN THE DISTANCE BETWEEN THE SIDE OF THE STANDARD ISOLATION BOX AND IMMOVABLE JOINT IS 18" OR LESS.

BACKFILL MATERIAL AROUND STRUCTURE WILL BE COMPACTED TO 95% MODIFIED PROCTOR PRIOR TO THE PLACEMENT OF CONCRETE WITHIN THE ISOLATION BOX.

CDOT CHICAGO DEPARTMENT OF TRANSPORTATION	DATE	REVISION	CITY OF CHICAGO
	1/1/2014	REVISION 1	DETAILS OF STRUCTURE CASTING ISOLATION BOX
			DATE: 12/21/06 · SHEET: A-2-10A · DRAWN BY: CDOT

DESIGN BY:										
DRAWN BY:										
CHECKED BY:										
APPROVED BY:		4	7/3/2023	ISSUED FOR BID						
CDOT/APPROVED BY:		NO.	DATE	REVISIONS	DES.	DRW.	CHK.	DCCO	CDOT	

TranSystems
TRANSYSTEMS
222 SOUTH RIVERSIDE PLAZA SUITE 610
CHICAGO, ILLINOIS 60606

SOM
SKIDMORE, OWINGS & MERRILL LLP
224 SOUTH MICHIGAN AVENUE, SUITE 1000
CHICAGO, ILLINOIS 60604

MICHAEL J. LEV
062-055367
LICENSED PROFESSIONAL ENGINEER
ILLINOIS

CDOT
CHICAGO DEPARTMENT OF TRANSPORTATION
DIVISION OF ENGINEERING

STATE / LAKE LOOP ELEVATED STATION
200 NORTH STATE STREET, CHICAGO, IL 60601

SPEC. NO.

CIVIL DETAILS

DRAWING NO.
C-142

CDOT PROJECT D-1-209 | DATE: 7/3/2023 | REVISION NO.

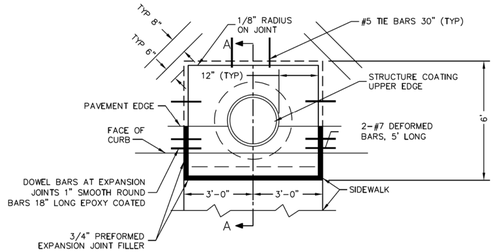

NOTES:

1. STRUCTURE CASTING MAY BE ROUND OR RECTANGUALR.
2. CONCRETE WITHIN THE ISOLATION BOX WILL BE OF THE SAME TYPE AND THICKNESS AS CONCRETE IN THE ADJACENT PAVEMENT.

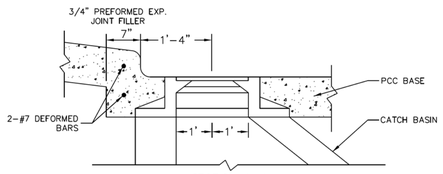

SECTION A-A

CDOT CHICAGO DEPARTMENT OF TRANSPORTATION	DATE	REVISION	CITY OF CHICAGO
	1/1/2014	REVISION 1	DETAILS OF STRUCTURE CASTING ISOLATION BOX FOR P.C.C. PAVEMENT AND BASE COURSE
			DATE: 12/22/06 · SHEET: A-2-10B · DRAWN BY: CDOT

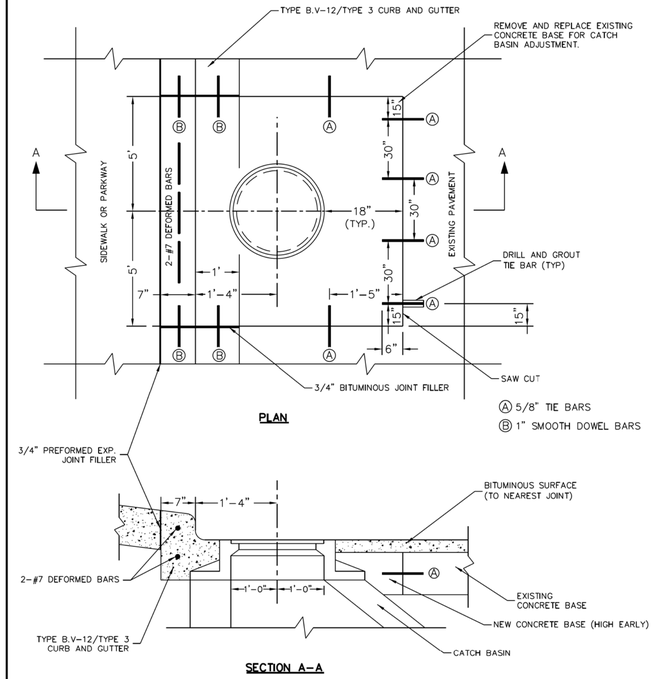

PLAN

Ⓐ 5/8" TIE BARS
Ⓑ 1" SMOOTH DOWEL BARS

SECTION A-A

CDOT CHICAGO DEPARTMENT OF TRANSPORTATION	DATE	REVISION	CITY OF CHICAGO
	1/1/2014	REVISION 1	CATCH BASIN ADJUSTMENT IN EXISTING PAVEMENT
			DATE: 12/22/06 · SHEET: A-2-11 · DRAWN BY: CDOT

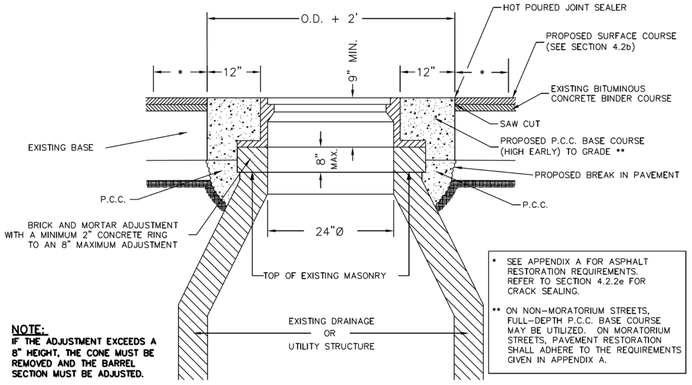

NOTE:
IF THE ADJUSTMENT EXCEEDS A 8" HEIGHT, THE CONE MUST BE REMOVED AND THE BARREL SECTION MUST BE ADJUSTED.

* SEE APPENDIX A FOR ASPHALT RESTORATION REQUIREMENTS. REFER TO SECTION 4.2.2e FOR CRACK SEALING.

** ON NON-MORATORIUM STREETS, FULL-DEPTH P.C.C. BASE COURSE MAY BE UTILIZED. ON MORATORIUM STREETS, PAVEMENT RESTORATION SHALL ADHERE TO THE REQUIREMENTS GIVEN IN APPENDIX A.

PLAN VIEW (BASE TO GRADE)

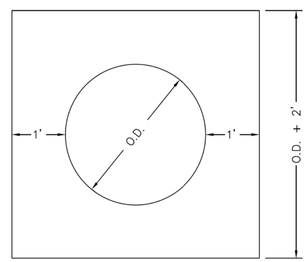

MANHOLE COVER FRONT VIEW

CDOT CHICAGO DEPARTMENT OF TRANSPORTATION	DATE	REVISION	CITY OF CHICAGO
	1/1/2014	REVISION 1	FRAME ADJUSTMENT IN PAVEMENT
	1/27/2016	REVISION 2	
	10/18/2019	REVISION 3	DATE: 12/22/06 · SHEET: A-2-12 · DRAWN BY: CDOT

DESIGN BY:										
DRAWN BY:										
CHECKED BY:										
APPROVED BY:		4	7/3/2023	ISSUED FOR BID						
CDOT/APPROVED BY:		NO.	DATE	REVISIONS	DES.	DRW.	CHK.	DCCO	CDOT	

TRANSYSTEMS
222 SOUTH RIVERSIDE PLAZA SUITE 610
CHICAGO, ILLINOIS 60606

SKIDMORE, OWINGS & MERRILL LLP
224 SOUTH MICHIGAN AVENUE, SUITE 1000
CHICAGO, ILLINOIS 60604

MICHAEL J. LEV 062-055367 LICENSED PROFESSIONAL ENGINEER STATE OF ILLINOIS

CHICAGO DEPARTMENT OF TRANSPORTATION
DIVISION OF ENGINEERING

STATE / LAKE LOOP ELEVATED STATION
200 NORTH STATE STREET, CHICAGO, IL 60601

CIVIL DETAILS

CDOT PROJECT D-1-209 · DATE: 7/3/2023

SPEC. NO.

DRAWING NO. C-143

REVISION NO.

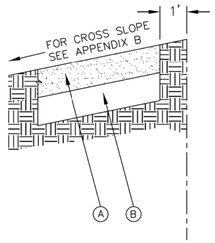

LEGEND:

(A) PROPOSED 5" P.C.C. SIDEWALK *

(B) SUBBASE GRANULAR MATERIAL, TYPE B OR C, 4"

* CURB RAMP & KEYSTONE 8" P.C.C. AT SIGNALIZED AND INDUSTRIAL STREET INTERSECTIONS

	DATE	REVISION	CITY OF CHICAGO		
CDOT CHICAGO DEPARTMENT OF TRANSPORTATION	1/1/2014	REVISION 1	ADA COMPLIANT SIDEWALK CONSTRUCTION DETAILS		
			DATE	SHEET	DRAWN BY
			12/20/06	A-3-1	CDOT

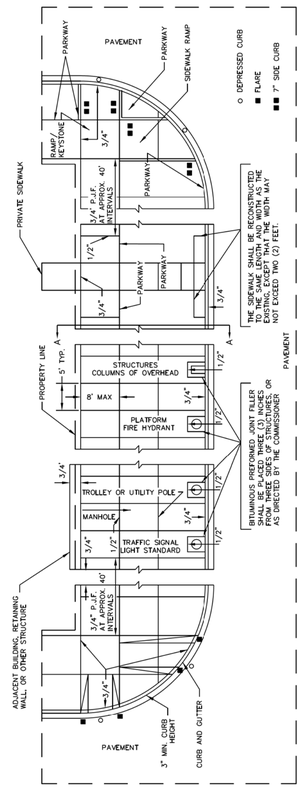

	DATE	REVISION	CITY OF CHICAGO		
CDOT CHICAGO DEPARTMENT OF TRANSPORTATION	1/1/2014	REVISION 1	DETAILS OF PORTLAND CEMENT CONCRETE CONSTRUCTION		
			DATE	SHEET	DRAWN BY
			12/22/06	A-3-2	CDOT

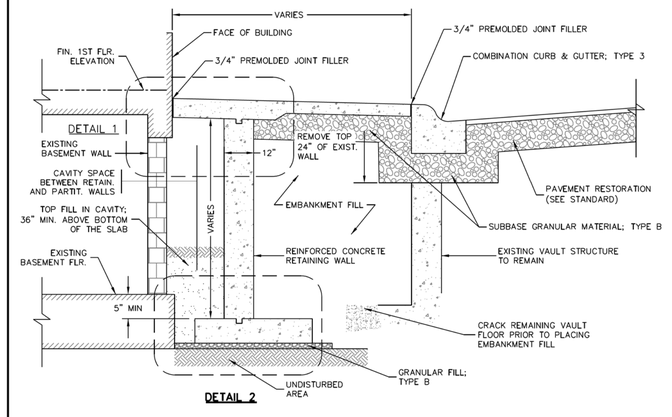

FINAL DESIGN, CERTIFIED BY A REGISTERED STRUCTURAL ENGINEER, TO BE SUBMITTED TO THE DEPARTMENT OR TRANSPORTATION FOR REVIEW AND COMMENT PRIOR TO APPLICATION FOR PUBLIC WAY PERMIT.

CONCRETE RETAINING WALL NOTES

1. CONTRACTOR TO VERIFY THE CONDITION OF BUILDING FOUNDATION AND THE LOCATION OF WATER, GAS, AND OTHER UTILITIES WITHIN THE VAULTED AREA.
2. CONTRACTOR RESPONSIBLE FOR NOTIFYING THE UTILITIES OF THE ELIMINATION OF THE VAULT.
3. SEAL ALL EXISTING OPENINGS TO VAULT AREA WITHIN THE C.M.U.
4. COMPACT EXISTING FILL TO NOT LESS THAN 95% OF MODIFIED LABORATORY DENSITY.
5. CONTRACTOR SHOULD EXERCISE UTMOST CAUTION TO ENSURE THEIR OPERATIONS DO NOT CAUSE DAMAGES TO ADJACENT STRUCTURES. THEY ARE RESPONSIBLE FOR IMMEDIATE REPAIRS TO THE SATISFACTION OR PROPERTY OWNERS.
6. CONTRACTOR TO SECURE IMMEDIATE AREA DURING CONSTRUCTION OF VAULTED TO PREVENT PUBLIC ACCESS INTO ADJACENT BUILDING.

	DATE	REVISION	CITY OF CHICAGO		
CDOT CHICAGO DEPARTMENT OF TRANSPORTATION	1/1/2014	REVISION 1	ELIMINATION OF VAULTED SIDEWALK ADJACENT TO BUILDING		
			DATE	SHEET	DRAWN BY
			01/02/07	A-3-3	CDOT

DESIGN BY:											
DRAWN BY:											
CHECKED BY:											
APPROVED BY:		4	7/3/2023	ISSUED FOR BID							
CDOT/APPROVED BY:		NO.	DATE	REVISIONS	DES.	DRW.	CHK.	DCCO	CDOT		

TranSystems
TRANSYSTEMS
222 SOUTH RIVERSIDE PLAZA SUITE 610
CHICAGO, ILLINOIS 60606

SOM
SKIDMORE, OWINGS & MERRILL LLP
224 SOUTH MICHIGAN AVENUE, SUITE 1000
CHICAGO, ILLINOIS 60604

MICHAEL J. LEY
062-055367
LICENSED PROFESSIONAL ENGINEER
ILLINOIS

CDOT
CHICAGO DEPARTMENT OF TRANSPORTATION
DIVISION OF ENGINEERING

STATE / LAKE LOOP ELEVATED STATION
200 NORTH STATE STREET, CHICAGO, IL 60601

SPEC. NO.

CIVIL DETAILS

DRAWING NO.
C-144

CDOT PROJECT D-1-209

DATE: 7/3/2023

REVISION NO.

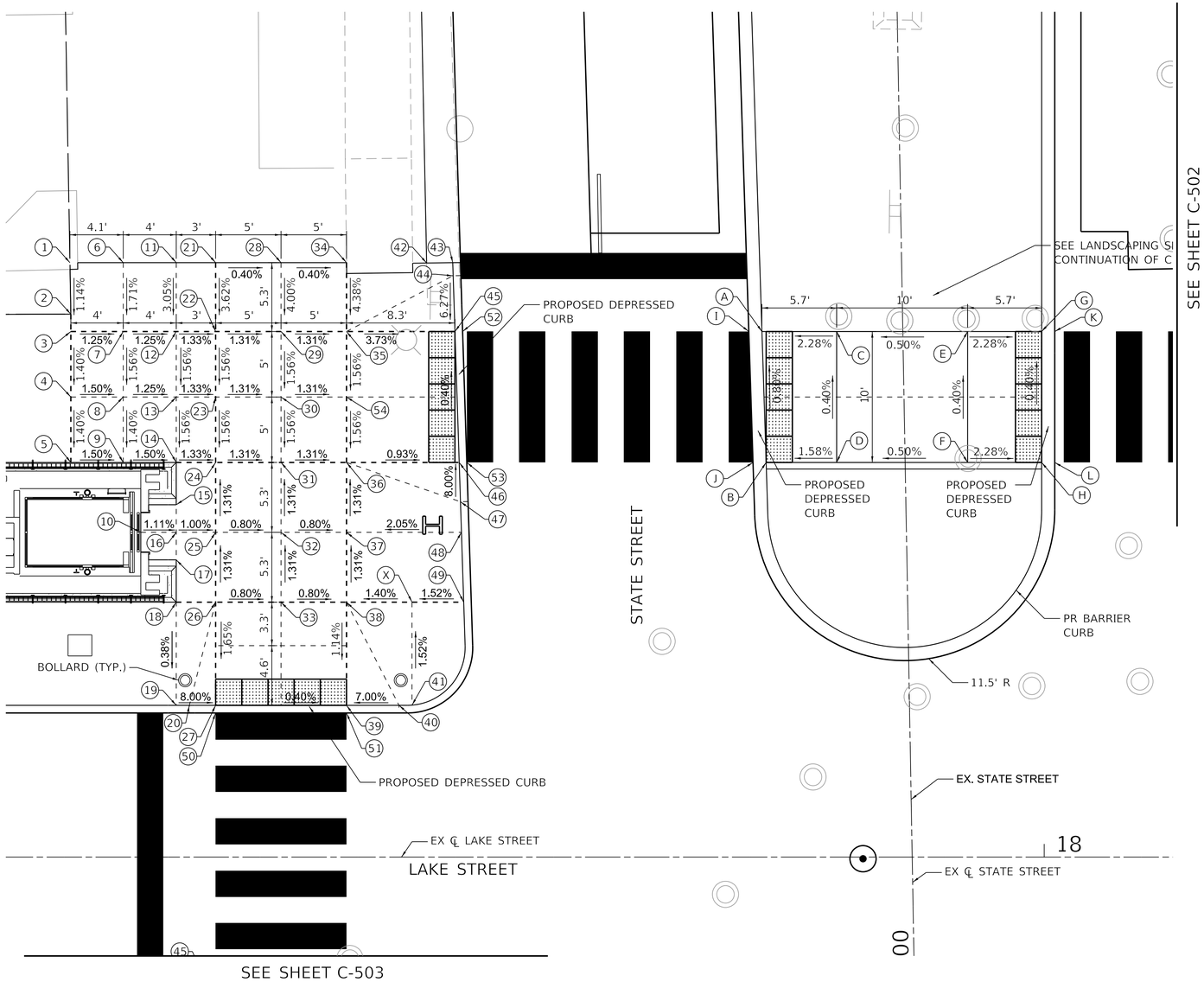

POINT	STATION	OFFSET	ELEVATION
1	17+25.60	45.38' LT	(14.35)
2	17+25.67	41.45' LT	(14.32)
3	17+25.67	40.13' LT	14.29
4	17+25.67	35.13' LT	14.22
5	17+25.67	30.13' LT	14.15
6	17+29.67	45.38' LT	(14.35)
7	17+29.67	40.13' LT	14.24
8	17+29.67	35.13' LT	14.16
9	17+29.67	30.13' LT	14.09
10	17+31.01	24.79' LT	14.12
11	17+33.72	45.38' LT	(14.35)
12	17+33.72	40.13' LT	14.19
13	17+33.72	35.13' LT	14.11
14	17+33.72	30.13' LT	14.03
15	17+33.72	26.90' LT	14.08
16	17+33.72	24.79' LT	14.09
17	17+33.72	22.69' LT	14.08
18	17+33.72	19.46' LT	14.20
19	17+33.72	11.58' LT	14.17
20	17+34.72	11.58' LT	14.16
21	17+36.72	45.38' LT	(14.34)
22	17+36.72	40.13' LT	14.15
23	17+36.72	35.13' LT	14.07
24	17+36.72	30.13' LT	13.99
25	17+36.72	24.79' LT	14.06
26	17+36.72	19.46' LT	14.13
27	17+36.72	11.58' LT	14.00
28	17+41.72	45.38' LT	(14.32)
29	17+41.72	40.13' LT	14.11
30	17+41.72	35.13' LT	14.03
31	17+41.72	30.13' LT	13.95
32	17+41.72	24.79' LT	14.02
33	17+41.72	19.46' LT	14.09
34	17+46.72	45.38' LT	(14.30)
35	17+46.72	40.13' LT	14.07
36	17+46.72	30.13' LT	13.981
37	17+46.72	24.79' LT	13.98
38	17+46.72	19.46' LT	14.05
39	17+46.72	11.58' LT	13.96
40	17+50.72	11.60' LT	14.24
41	17+51.72	11.60' LT	14.24
42	17+52.84	45.35' LT	(14.27)
43	17+54.83	45.38' LT	14.06
44	17+54.84	44.38' LT	14.06
45	17+55.00	40.13' LT	13.79
46	17+55.32	30.13' LT	13.83
47	17+55.42	27.13' LT	14.07
48	17+55.49	24.79' LT	14.16
49	17+55.67	19.46' LT	14.18
50	17+36.72	11.00' LT	13.97
51	17+46.72	11.00' LT	13.93
52	17+55.58	40.13' LT	13.76
53	17+55.91	30.13' LT	13.80
54	17+46.72	35.13' LT	13.99

POINT	STATION	OFFSET	ELEVATION
A	17+78.44	40.13' LT	14.38
B	17+78.76	30.13' LT	14.46
C	17+84.15	40.13' LT	14.51
D	17+84.15	30.13' LT	14.55
E	17+94.15	40.13' LT	14.56
F	17+94.15	30.13' LT	14.60
G	17+99.80	40.13' LT	14.43
H	17+99.80	30.13' LT	14.47
I	17+77.44	40.13' LT	14.35
J	17+77.76	30.12' LT	14.43
K	18+00.80	40.13' LT	14.40
L	18+00.80	30.13' LT	14.44

NOTE:
(XX.XX) INDICATES EXISTING ELEVATIONS.

N

0 5 10 15
SCALE IN FEET

DESIGN BY:										
DRAWN BY:										
CHECKED BY:										
APPROVED BY:		4	7/3/2023	ISSUED FOR BID	AS	AS	CJD			
CDOT/APPROVED BY:		NO.	DATE	REVISIONS	DES.	DRW.	CHK.	DCCO	CDOT	

TRANSYSTEMS
222 SOUTH RIVERSIDE PLAZA SUITE 610
CHICAGO, ILLINOIS 60606

SKIDMORE, OWINGS & MERRILL LLP
224 SOUTH MICHIGAN AVENUE, SUITE 1000
CHICAGO, ILLINOIS 60604

ARDMORE RODERICK
1500 W CARROLL AVE SUITE 300
CHICAGO, ILLINOIS 60607

LICENSED PROFESSIONAL ENGINEER
CARMEN J. DEAN
062-062138
STATE OF ILLINOIS

CHICAGO DEPARTMENT OF TRANSPORTATION
DIVISION OF ENGINEERING

STATE / LAKE LOOP ELEVATED STATION
200 NORTH STATE STREET, CHICAGO, IL 60601

ADA CURB RAMP - NORTHWEST CORNER

CDOT PROJECT D-1-209 | DATE: 7/3/2023

SPEC. NO.

DRAWING NO. C-501

REVISION NO.

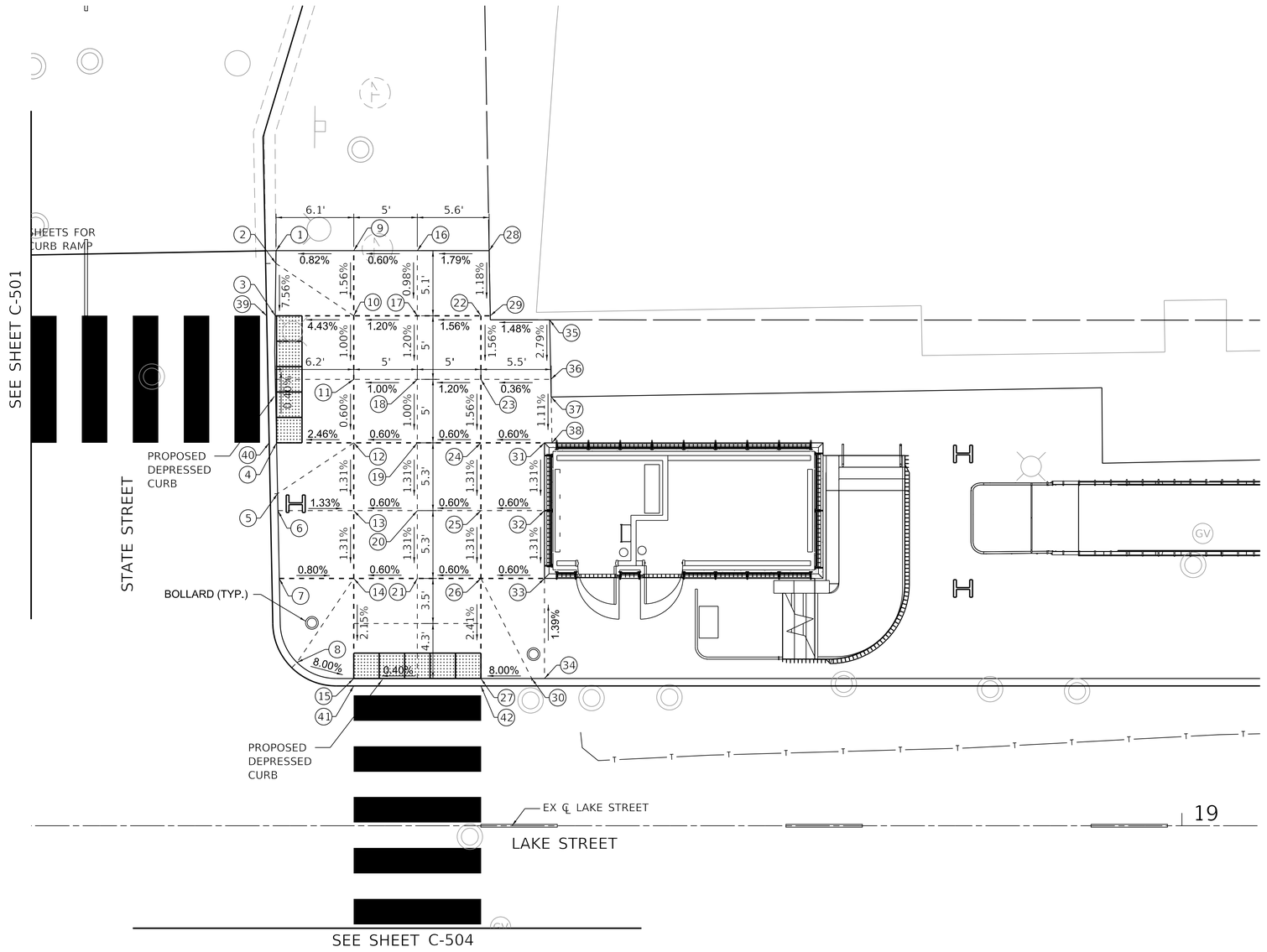

POINT	STATION	OFFSET	ELEVATION
1	18+28.75	45.25' LT	(14.44)
2	18+28.74	44.25' LT	14.45
3	18+28.68	40.13' LT	14.14
4	18+28.79	30.13' LT	14.18
5	18+28.87	26.13' LT	14.36
6	18+28.89	24.79' LT	14.34
7	18+29.00	19.46' LT	14.29
8	18+30.40	12.85' LT	14.42
9	18+34.86	45.25' LT	(14.49)
10	18+34.86	40.13' LT	14.41
11	18+34.86	35.13' LT	14.36
12	18+34.86	30.13' LT	14.33
13	18+34.86	24.79' LT	14.26
14	18+34.86	19.46' LT	14.19
15	18+34.86	11.58' LT	14.02
16	18+39.86	45.25' LT	(14.52)
17	18+39.86	40.13' LT	14.47
18	18+39.86	35.13' LT	14.41
19	18+39.86	30.13' LT	14.36
20	18+39.86	24.79' LT	14.29
21	18+39.86	19.46' LT	14.22
22	18+44.86	40.13' LT	14.55
23	18+44.86	35.13' LT	14.47
24	18+44.86	30.13' LT	14.39
25	18+44.86	24.79' LT	14.32
26	18+44.86	19.46' LT	14.25
27	18+44.86	11.58' LT	14.06
28	18+45.51	45.25' LT	(14.62)
29	18+45.60	40.13' LT	(14.56)
30	18+48.86	11.58' LT	14.38
31	18+49.86	30.13' LT	14.42
32	18+49.86	24.79' LT	14.35
33	18+49.86	19.46' LT	14.28
34	18+49.86	11.58' LT	14.39
35	18+50.27	39.80' LT	(14.63)
36	18+50.36	35.13' LT	(14.49)
37	18+50.39	33.73' LT	(14.46)
38	18+50.45	30.13' LT	14.42
39	18+28.00	40.13' LT	14.11
40	18+28.20	30.13' LT	14.15
41	18+34.86	11.00' LT	13.99
42	18+44.86	11.00' LT	14.03

NOTE:
(XX.XX) INDICATES EXISTING ELEVATIONS.

N

0 5 10 15
SCALE IN FEET

DESIGN BY:										
DRAWN BY:										
CHECKED BY:										
APPROVED BY:		4	7/3/2023	ISSUED FOR BID	AS	AS	CJD			
CDOT/APPROVED BY:		NO.	DATE	REVISIONS	DES.	DRW.	CHK.	DCCO	CDOT	

TRANSYSTEMS
222 SOUTH RIVERSIDE PLAZA SUITE 610
CHICAGO, ILLINOIS 60606

SKIDMORE, OWINGS & MERRILL LLP
224 SOUTH MICHIGAN AVENUE, SUITE 1000
CHICAGO, ILLINOIS 60604

ARDMORE RODERICK
1500 W CARROLL AVE SUITE 300
CHICAGO, ILLINOIS 60607

LICENSED PROFESSIONAL ENGINEER
CARMEN J. DEAN
062-062138
STATE OF ILLINOIS

CHICAGO DEPARTMENT OF TRANSPORTATION
DIVISION OF ENGINEERING

STATE / LAKE LOOP ELEVATED STATION
200 NORTH STATE STREET, CHICAGO, IL 60601

ADA CURB RAMP - NORTHEAST CORNER

CDOT PROJECT D-1-209 | DATE: 7/3/2023

SPEC. NO.

DRAWING NO. C-502

REVISION NO.

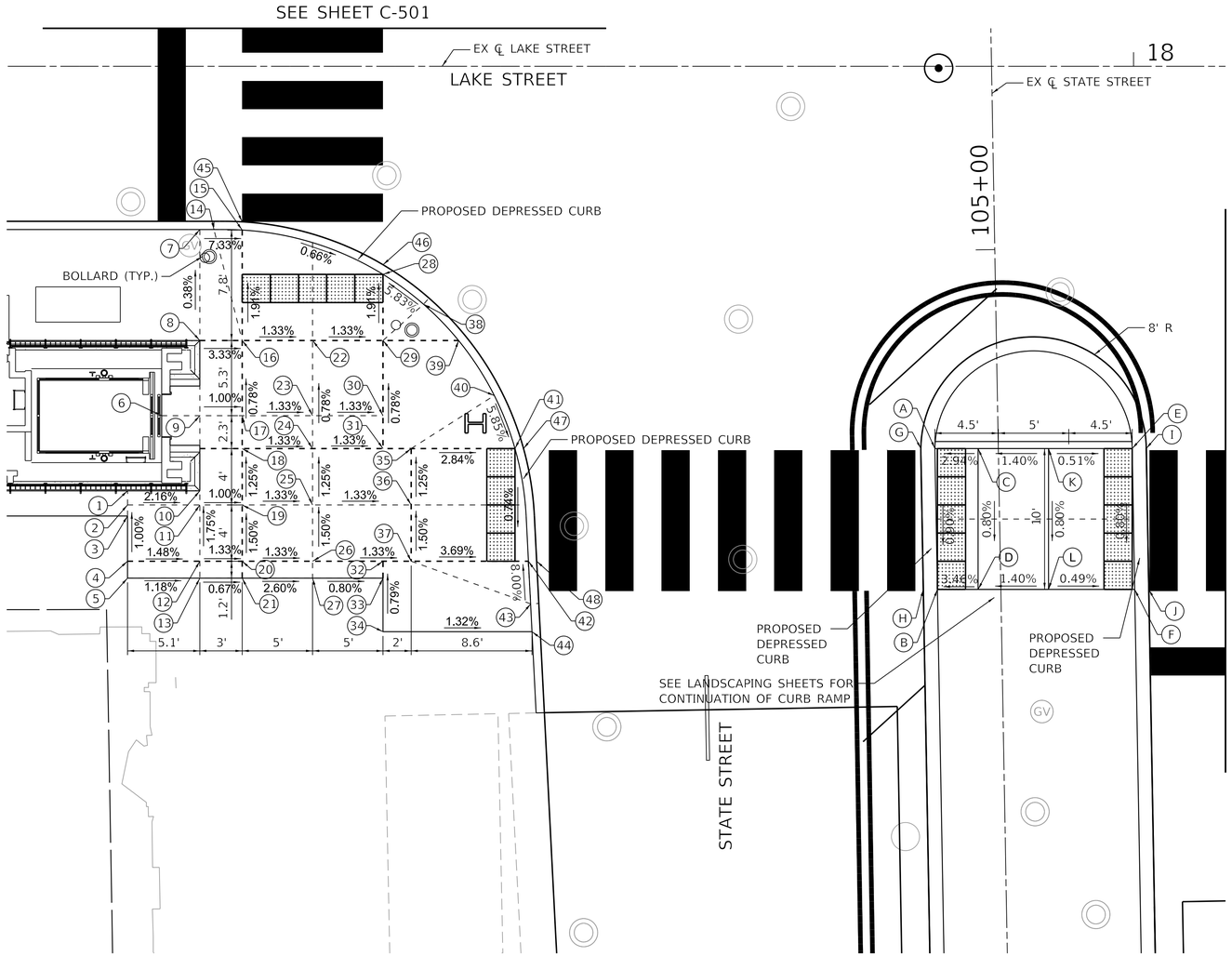

POINT	STATION	OFFSET	ELEVATION
1	17+28.58	30.12' RT	14.41
2	17+28.58	31.12' RT	14.43
3	17+28.58	31.91' RT	14.44
4	17+28.58	35.12' RT	(14.48)
5	17+28.58	36.32' RT	(14.50)
6	17+31.01	24.79' RT	14.30
7	17+33.72	11.58' RT	14.26
8	17+33.72	19.46' RT	14.29
9	17+33.72	24.79' RT	14.26
10	17+33.72	30.12' RT	14.33
11	17+33.72	31.12' RT	14.33
12	17+33.72	35.12' RT	14.40
13	17+33.72	36.32' RT	(14.44)
14	17+34.72	11.58' RT	14.26
15	17+36.72	11.62' RT	14.04
16	17+36.72	19.46' RT	14.19
17	17+36.72	24.79' RT	14.23
18	17+36.72	27.12' RT	14.26
19	17+36.72	31.12' RT	14.30
20	17+36.72	35.12' RT	14.36
21	17+36.72	36.32' RT	(14.42)
22	17+41.72	19.46' RT	14.12
23	17+41.72	24.79' RT	14.16
24	17+41.72	27.12' RT	14.18
25	17+41.72	31.12' RT	14.23
26	17+41.72	35.12' RT	14.29
27	17+41.72	36.32' RT	(14.29)
28	17+46.72	14.76' RT	13.97
29	17+46.72	19.46' RT	14.06
30	17+46.72	24.79' RT	14.10
31	17+46.72	27.12' RT	14.12
32	17+46.72	35.12' RT	14.23
33	17+46.72	36.32' RT	14.25
34	17+46.72	40.12' RT	14.28
35	17+48.72	27.12' RT	14.09
36	17+48.72	31.12' RT	14.14
37	17+48.72	35.12' RT	14.20
38	17+49.60	16.89' RT	14.18
39	17+52.09	19.46' RT	14.16
40	17+54.62	23.36' RT	14.12
41	17+56.09	27.12' RT	13.88
42	17+57.04	35.12' RT	13.82
43	17+57.21	38.15' RT	14.06
44	17+57.30	40.12' RT	14.05
45	17+36.72	11.03' RT	14.01
46	17+46.72	14.08' RT	13.94
47	17+56.69	27.12' RT	13.85
48	17+57.63	35.12' RT	13.79

NOTE:
(XX.XX) INDICATES EXISTING ELEVATIONS.

POINT	STATION	OFFSET	ELEVATION
A	17+85.90	27.12' RT	14.28
B	17+86.08	37.12' RT	14.19
C	17+88.97	27.12' RT	14.37
D	17+88.97	37.12' RT	14.29
E	17+99.90	27.12' RT	14.41
F	18+00.08	37.12' RT	14.33
G	17+84.90	27.12' RT	14.25
H	17+85.08	37.12' RT	14.16
I	18+00.90	27.12' RT	14.38
J	18+01.08	37.12' RT	14.30
K	17+93.97	27.12' RT	14.44
L	17+93.97	37.12' RT	14.36

N

0 5 10 15
SCALE IN FEET

DESIGN BY:										
DRAWN BY:										
CHECKED BY:										
APPROVED BY:		4	7/3/2023	ISSUED FOR BID	AS	AS	CJD			
CDOT/APPROVED BY:		NO.	DATE	REVISIONS	DES.	DRW.	CHK.	DCCO	CDOT	

TRANSYSTEMS
222 SOUTH RIVERSIDE PLAZA SUITE 610
CHICAGO, ILLINOIS 60606

SKIDMORE, OWINGS & MERRILL LLP
224 SOUTH MICHIGAN AVENUE, SUITE 1000
CHICAGO, ILLINOIS 60604

ARDMORE RODERICK
1500 W CARROLL AVE SUITE 300
CHICAGO, ILLINOIS 60607

LICENSED PROFESSIONAL ENGINEER
CARMEN J. DEAN
062-062138
STATE OF ILLINOIS

CHICAGO DEPARTMENT OF TRANSPORTATION
DIVISION OF ENGINEERING

STATE / LAKE LOOP ELEVATED STATION
200 NORTH STATE STREET, CHICAGO, IL 60601

ADA CURB RAMP - SOUTHWEST CORNER

CDOT PROJECT D-1-209 | DATE: 7/3/2023

SPEC. NO.

DRAWING NO. C-503

REVISION NO.

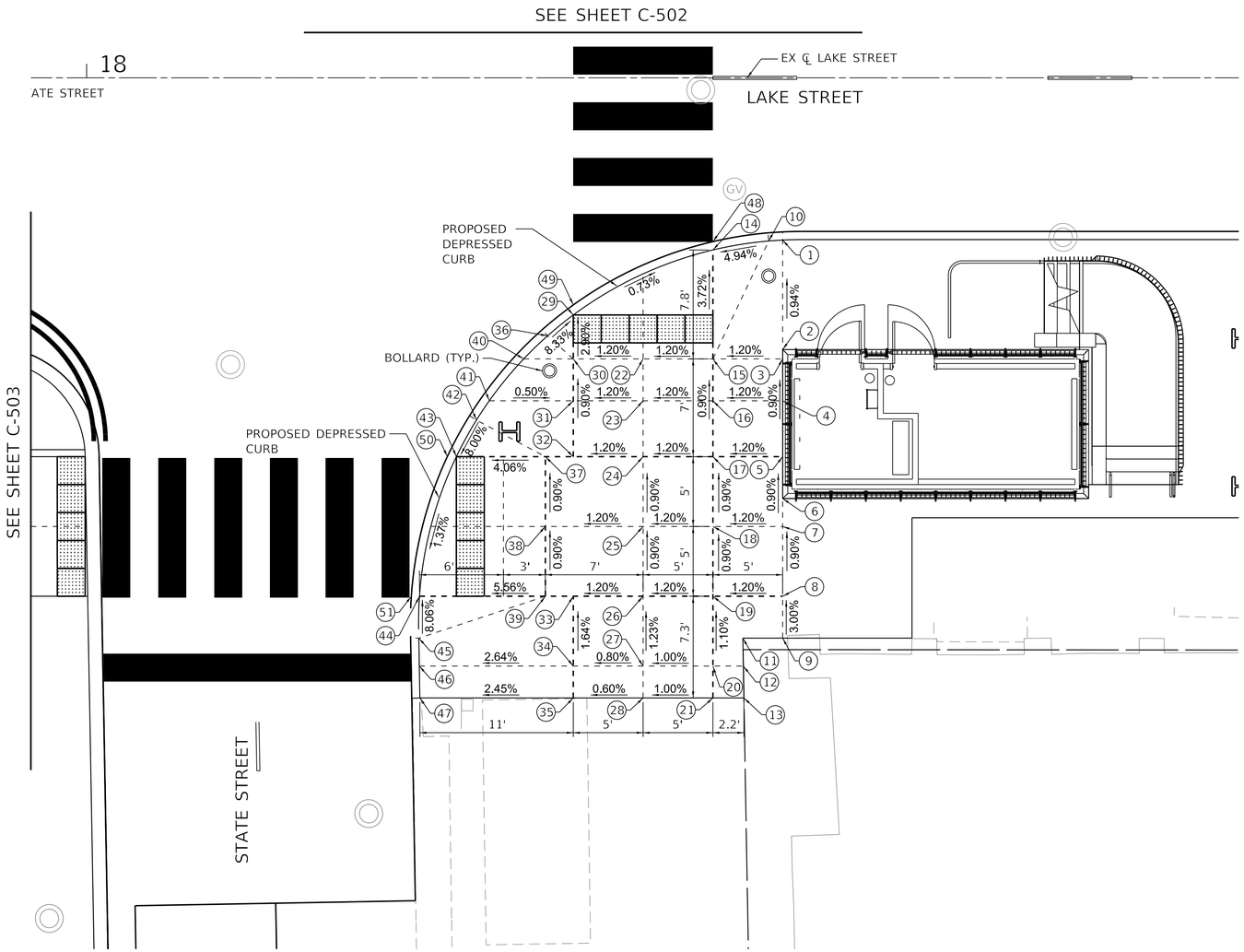

POINT	STATION	OFFSET	ELEVATION
1	18+49.86	11.62' RT	14.43
2	18+49.86	19.46' RT	14.50
3	18+49.86	20.12' RT	14.51
4	18+49.86	23.12' RT	14.54
5	18+49.86	27.12' RT	14.57
6	18+49.86	30.13' RT	14.60
7	18+49.86	32.12' RT	14.62
8	18+49.86	37.12' RT	14.66
9	18+49.86	40.12' RT	(14.75)
10	18+48.86	11.68' RT	14.36
11	18+47.01	40.12' RT	(14.79)
12	18+47.04	42.12' RT	(14.77)
13	18+47.08	44.41' RT	(14.76)
14	18+44.86	12.33' RT	14.16
15	18+44.86	20.12' RT	14.45
16	18+44.86	23.12' RT	14.48
17	18+44.86	27.12' RT	14.51
18	18+44.86	32.12' RT	14.56
19	18+44.86	37.12' RT	14.60
20	18+44.86	42.12' RT	14.65
21	18+44.86	44.41' RT	(14.68)
22	18+39.86	20.12' RT	14.39
23	18+39.86	23.12' RT	14.42
24	18+39.86	27.12' RT	14.45
25	18+39.86	32.12' RT	14.50
26	18+39.86	37.12' RT	14.54
27	18+39.86	42.12' RT	14.60
28	18+39.86	44.41' RT	(14.63)
29	18+34.86	16.98' RT	14.24
30	18+34.86	20.12' RT	14.33
31	18+34.86	23.12' RT	14.36
32	18+34.86	27.12' RT	14.39
33	18+34.86	37.12' RT	14.48
34	18+34.86	42.12' RT	14.56
35	18+34.86	44.41' RT	(14.60)
36	18+33.02	18.48' RT	14.44
37	18+32.86	27.12' RT	14.37
38	18+32.86	32.12' RT	14.42
39	18+32.86	37.12' RT	14.46
40	18+31.31	20.12' RT	14.44
41	18+28.84	23.12' RT	14.39
42	18+27.92	24.51' RT	14.35
43	18+26.49	27.12' RT	14.11
44	18+23.84	37.12' RT	13.96
45	18+23.80	40.12' RT	14.21
46	18+23.83	42.12' RT	14.27
47	18+23.87	44.41' RT	(14.23)
48	18+44.86	11.73' RT	14.13
49	18+34.86	16.26' RT	14.21
50	18+25.84	27.12' RT	14.08
51	18+23.26	37.12' RT	13.93

NOTE:
(XX.XX) INDICATES EXISTING ELEVATIONS.

N

0 5 10 15
SCALE IN FEET

DESIGN BY:										
DRAWN BY:										
CHECKED BY:										
APPROVED BY:		4	7/3/2023	ISSUED FOR BID	AS	AS	CJD			
CDOT/APPROVED BY:		NO.	DATE	REVISIONS	DES.	DRW.	CHK.	DCCO	CDOT	

TRANSYSTEMS
222 SOUTH RIVERSIDE PLAZA SUITE 610
CHICAGO, ILLINOIS 60606

SKIDMORE, OWINGS & MERRILL LLP
224 SOUTH MICHIGAN AVENUE, SUITE 1000
CHICAGO, ILLINOIS 60604

ARDMORE RODERICK
1500 W CARROLL AVE SUITE 300
CHICAGO, ILLINOIS 60607

LICENSED PROFESSIONAL ENGINEER
CARMEN J. DEAN
062-062138
STATE OF ILLINOIS

CHICAGO DEPARTMENT OF TRANSPORTATION
DIVISION OF ENGINEERING

STATE / LAKE LOOP ELEVATED STATION
200 NORTH STATE STREET, CHICAGO, IL 60601

ADA CURB RAMP - SOUTHEAST CORNER

CDOT PROJECT D-1-209 | DATE: 7/3/2023

SPEC. NO.

DRAWING NO.
C-504

REVISION NO.

NOTES:

TYPICAL CROSSWALK CONSISTS OF TWO PROJECTED LINES, ONE OF THEM A PROJECTION OF THE PROPERTY LINE AND THE OTHER PARALLEL AS DEFINED BY SIDEWALK WIDTH.

WHERE CROSSWALK LOCATIONS ARE DEFINED BY SPECIFIC CURB RAMP SITUATIONS, THE ABOVE TYPICAL LAYOUT MAY NOT APPLY. SEE CURB RAMP LAYOUTS IN APPENDIX B FOR ADDITIONAL CROSSWALK DETAILS.

FOR CROSSWALKS AT INTERSECTIONS WHERE PROPERTY LINES ARE NOT AT 90 DEGREES, ALIGN THE PROPERTY LINES (SEE DASHED LINE BELOW) TO LOCATE INNER CROSSWALK LINE.

SEE SECTION 4.2.9 AND SHEET A-7-1 FOR GUIDELINES REGARDING THE LAYOUT OF CONTINENTAL AND LADDER MARKINGS.

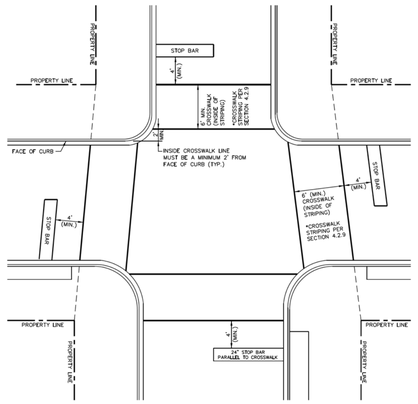

CDOT CHICAGO DEPARTMENT OF TRANSPORTATION	DATE	REVISION	CITY OF CHICAGO
	1/1/2014	REVISION 1	INTERSECTION CROSSWALK LAYOUT
			DATE 01/10/07 · SHEET A-1-3 · DRAWN BY CDOT

NOTES:

CURB RAMP LAYOUT B-1-2 IS PREFERRED WHEREVER POSSIBLE. WHERE RAMPS ARE LOCATED IN THE CORNER RADIUS, LAYOUT B-1-3 SHALL BE USED.

CURB RAMP PLACEMENT SHALL BE COORDINATED AS REQUIRED TO ALLOW FOR A 4' MINIMUM WIDTH SIDEWALK AROUND EACH CORNER OF INTERSECTION. SIDEWALK NOT TO BE OBSTRUCTED BY CURB RAMPS OR OTHER BARRIERS AND SHALL HAVE A CROSS SLOPE OF 1:64 MAXIMUM.

THE BLENDED TRANSITION LAYOUT B-1-7 (AND SIMILAR) MAY BE USED WHERE TWO RAMPS ARE NOT POSSIBLE DUE TO GEOMETRIC CONSTRAINTS, SUCH AS LIMITED SIDEWALK WIDTH OR GRADE ELEVATIONS. THE BLENDED TRANSITION SHALL NOT BE USED IF ACCESS TO AN EXISTING FACILITY WOULD BE REDUCED.

THE SHARED PERPENDICULAR RAMP AT CORNER LAYOUT B-1-10 IS NOT PREFERRED AND MAY ONLY BE USED WITH PERMISSION FROM THE COMMISSIONER.

SEE SHEET B-3-3 FOR TRANSITION PANEL GUIDELINES.

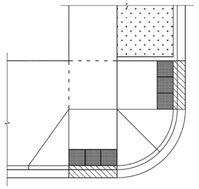

SHEET B-1-2: 2 PERPENDICULAR RAMPS

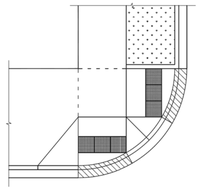

SHEET B-1-3: 2 RAMPS IN RADIUS

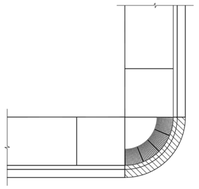

SHEET B-1-7: BLENDED TRANSITION

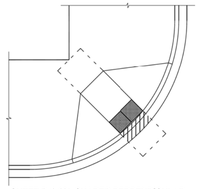

SHEET B-1-10: SHARED PERPENDICULAR RAMP AT CORNER

City of Chicago Rahm Emanuel, Mayor Department of Transportation Division of Engineering www.cityofchicago.org	DATE	REVISION
CDOT CHICAGO DEPARTMENT OF TRANSPORTATION	02/20/07	REVISION 1
	11/15/07	REVISION 2
	11/14/08	REVISION 3
	11/02/09	REVISION 4
	08/10/12	REVISION 5

CITY OF CHICAGO
TYPICAL CORNER RAMP LAYOUTS
SHEET B-1-1
SCALE: NOT TO SCALE · DATE: 10/23/2006 · DRAWN BY: CDOT · CHECKED BY: LCM

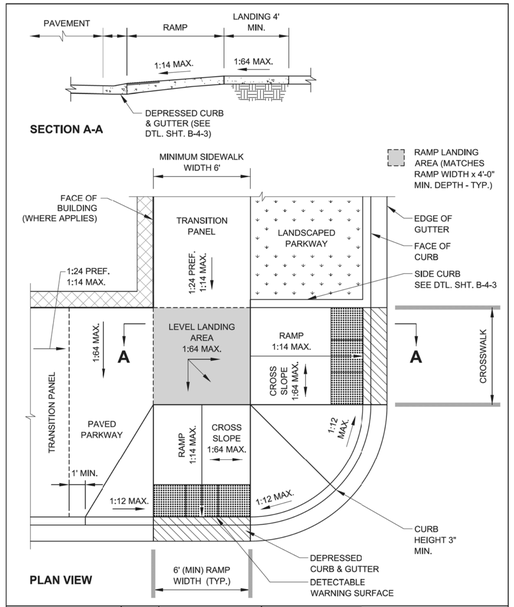

City of Chicago Rahm Emanuel, Mayor Department of Transportation Division of Engineering www.cityofchicago.org	DATE	REVISION
CDOT CHICAGO DEPARTMENT OF TRANSPORTATION	02/20/07	REVISION 1
	11/15/07	REVISION 2
	11/14/08	REVISION 3
	11/02/09	REVISION 4
	08/10/12	REVISION 5

CITY OF CHICAGO
2 PERPENDICULAR RAMPS AT CORNER
SHEET B-1-2
SCALE: NOT TO SCALE · DATE: 10/23/2006 · DRAWN BY: CDOT · CHECKED BY: LCM

* SIDE FLARES WITH A MINIMUM SLOPE OF 1:20 (MEASURED PARALLEL TO CURB) ARE NECESSARY FOR DETECTION BY THE BLIND AND VISUALLY IMPAIRED AT PAVED PARKWAYS WHERE DETECTABLE WARNING IS SET BACK FROM BACK OF CURB (TO BE POSITIONED PERPENDICULAR TO THE PATH OF TRAVEL). WHERE RAMP AND SIDE FLARE SLOPES ARE NOT NECESSARY TO CONNECT STREET AND SIDEWALK, THE DETECTABLE WARNING MUST FIT BACK OF CURB (SIMILAR TO SHEETS B-1-7 THRU B-1-9).

** REFER TO DTL. SHT. B-1-5 WHERE DETECTABLE WARNING SETBACK EXCEEDS 5'-0".

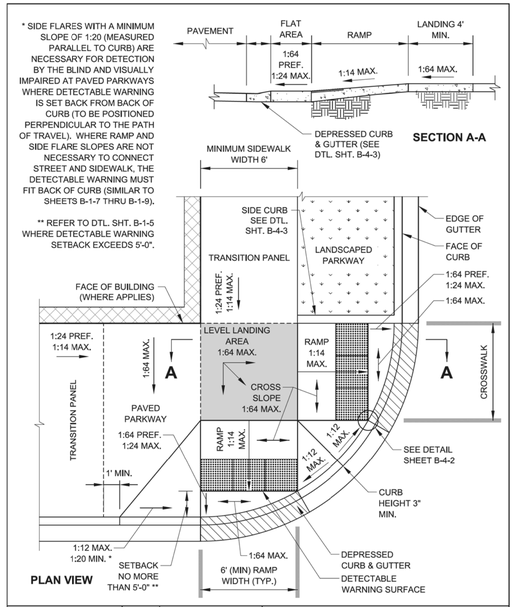

City of Chicago Rahm Emanuel, Mayor Department of Transportation Division of Engineering www.cityofchicago.org	DATE	REVISION
CDOT CHICAGO DEPARTMENT OF TRANSPORTATION	02/20/07	REVISION 1
	11/15/07	REVISION 2
	11/14/08	REVISION 3
	11/02/09	REVISION 4
	08/10/12	REVISION 5

CITY OF CHICAGO
2 PERPENDICULAR RAMPS AT CORNER
WITH RAMPS IN CURB RADIUS
SHEET B-1-3
SCALE: NOT TO SCALE · DATE: 10/23/2006 · DRAWN BY: CDOT · CHECKED BY: LCM

NOTES:

A. REFER TO DETAIL SHEETS B-1-2 & B-1-3 FOR ADDITIONAL REQUIREMENTS FOR PERPENDICULAR RAMPS AT CORNER.

B. REFER TO DETAIL SHEET B-1-7 FOR ADDITIONAL REQUIREMENTS FOR BLENDED TRANSITION DESIGN.

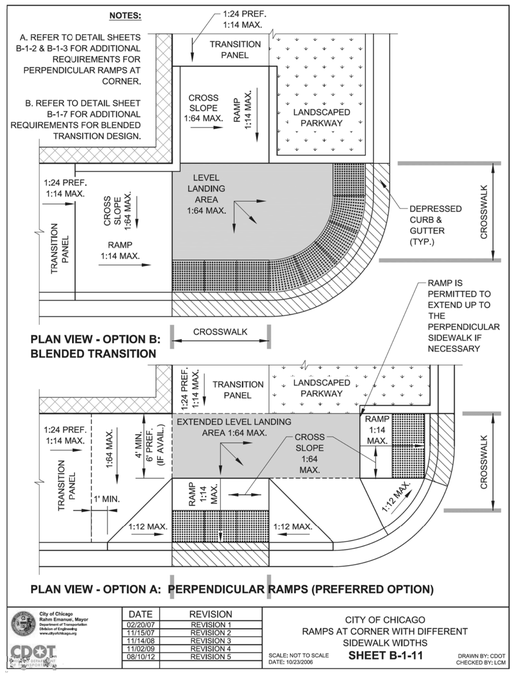

City of Chicago Rahm Emanuel, Mayor Department of Transportation Division of Engineering www.cityofchicago.org	DATE	REVISION
CDOT CHICAGO DEPARTMENT OF TRANSPORTATION	02/20/07	REVISION 1
	11/15/07	REVISION 2
	11/14/08	REVISION 3
	11/02/09	REVISION 4
	08/10/12	REVISION 5

CITY OF CHICAGO
RAMPS AT CORNER WITH DIFFERENT SIDEWALK WIDTHS
SHEET B-1-11
SCALE: NOT TO SCALE · DATE: 10/23/2006 · DRAWN BY: CDOT · CHECKED BY: LCM

DESIGN BY:										
DRAWN BY:										
CHECKED BY:										
APPROVED BY:		4	7/3/2023	ISSUED FOR BID						
CDOT/APPROVED BY:		NO.	DATE	REVISIONS	DES.	DRW.	CHK.	DCCO	CDOT	

TRANSYSTEMS
222 SOUTH RIVERSIDE PLAZA SUITE 610
CHICAGO, ILLINOIS 60606

SKIDMORE, OWINGS & MERRILL LLP
224 SOUTH MICHIGAN AVENUE, SUITE 1000
CHICAGO, ILLINOIS 60604

ARDMORE RODERICK
1500 W CARROLL AVE SUITE 300
CHICAGO, ILLINOIS 60607

LICENSED PROFESSIONAL ENGINEER — CARMEN J. DEAN — 062-062138 — STATE OF ILLINOIS

CHICAGO DEPARTMENT OF TRANSPORTATION
DIVISION OF ENGINEERING

STATE / LAKE LOOP ELEVATED STATION
200 NORTH STATE STREET, CHICAGO, IL 60601

ADA CURB RAMP DETAILS

CDOT PROJECT D-1-209 · DATE: 7/3/2023

SPEC. NO.

DRAWING NO. C-531

REVISION NO.

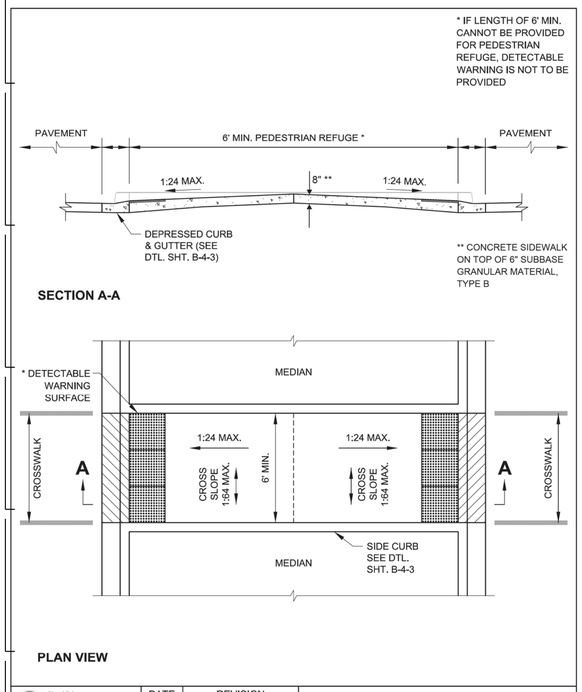

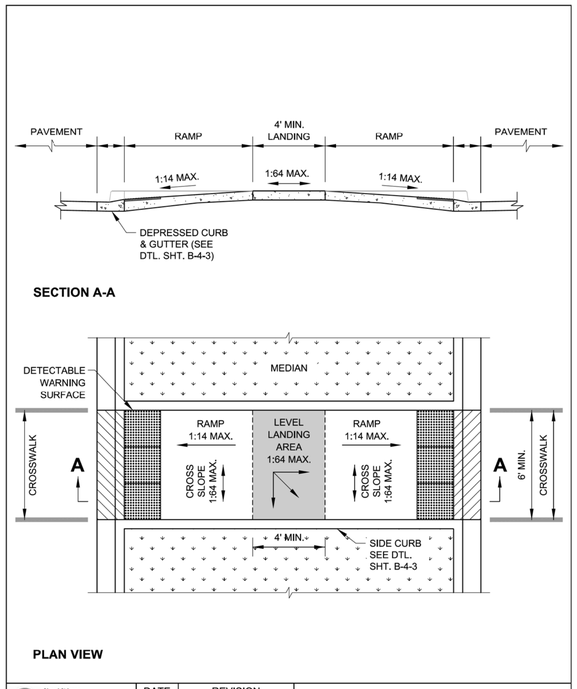

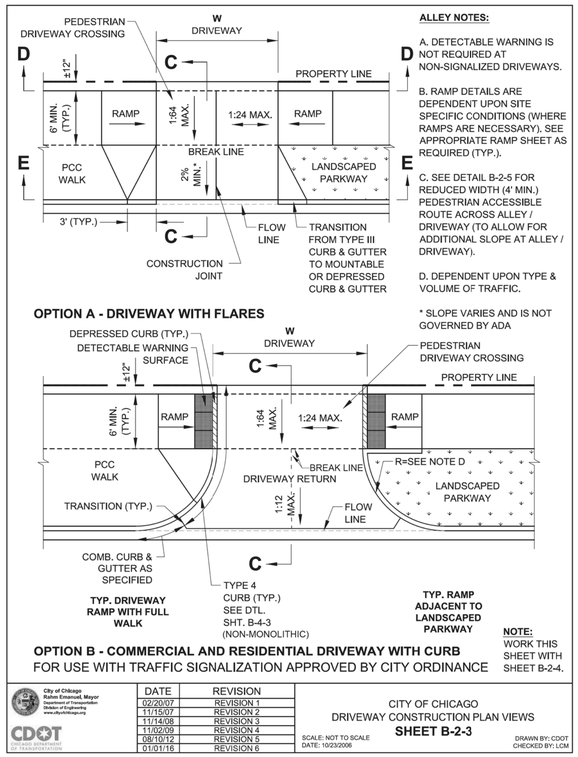

ALLEY NOTES:

A. DETECTABLE WARNING IS NOT REQUIRED AT NON-SIGNALIZED DRIVEWAYS.

B. RAMP DETAILS ARE DEPENDENT UPON SITE SPECIFIC CONDITIONS (WHERE RAMPS ARE NECESSARY). SEE APPROPRIATE RAMP SHEET AS REQUIRED (TYP.).

C. SEE DETAIL B-2-5 FOR REDUCED WIDTH (4' MIN.) PEDESTRIAN ACCESSIBLE ROUTE ACROSS ALLEY / DRIVEWAY (TO ALLOW FOR ADDITIONAL SLOPE AT ALLEY / DRIVEWAY).

D. DEPENDENT UPON TYPE & VOLUME OF TRAFFIC.

* SLOPE VARIES AND IS NOT GOVERNED BY ADA

NOTE: WORK THIS SHEET WITH SHEET B-2-4.

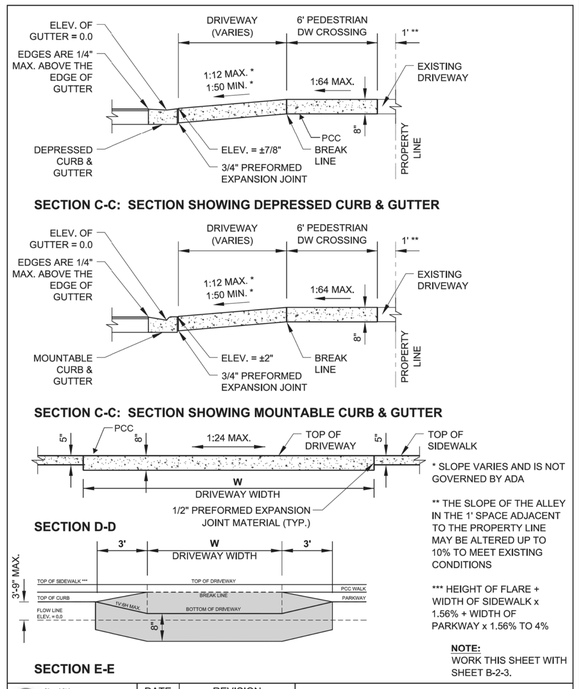

* SLOPE VARIES AND IS NOT GOVERNED BY ADA

** THE SLOPE OF THE ALLEY IN THE 1' SPACE ADJACENT TO THE PROPERTY LINE MAY BE ALTERED UP TO 10% TO MEET EXISTING CONDITIONS

*** HEIGHT OF FLARE + WIDTH OF SIDEWALK x 1.56% + WIDTH OF PARKWAY x 1.56% TO 4%

NOTE: WORK THIS SHEET WITH SHEET B-2-3.

City of Chicago Rahm Emanuel, Mayor — Department of Transportation — Division of Engineering — www.cityofchicago.org
CDOT — CHICAGO DEPARTMENT OF TRANSPORTATION

DATE	REVISION
02/20/07	REVISION 1
11/15/07	REVISION 2
11/14/08	REVISION 3
11/02/09	REVISION 4
08/10/12	REVISION 5
01/01/14	REVISION 6

CITY OF CHICAGO
MEDIAN PASS-THROUGH
SHEET B-1-19
SCALE: NOT TO SCALE
DATE: 10/23/2006
DRAWN BY: CDOT
CHECKED BY: OK

DATE	REVISION
02/20/07	REVISION 1
11/15/07	REVISION 2
11/14/08	REVISION 3
11/02/09	REVISION 4
08/10/12	REVISION 5

CITY OF CHICAGO
MEDIAN PASS-THROUGH WITH RAMPS
SHEET B-1-20
SCALE: NOT TO SCALE
DATE: 10/23/2006
DRAWN BY: CDOT
CHECKED BY: LOM

DATE	REVISION
02/20/07	REVISION 1
11/15/07	REVISION 2
11/14/08	REVISION 3
11/02/09	REVISION 4
08/10/12	REVISION 5
01/01/16	REVISION 6

CITY OF CHICAGO
DRIVEWAY CONSTRUCTION PLAN VIEWS
SHEET B-2-3
SCALE: NOT TO SCALE
DATE: 10/23/2006
DRAWN BY: CDOT
CHECKED BY: LOM

DATE	REVISION
02/20/07	REVISION 1
11/15/07	REVISION 2
11/14/08	REVISION 3
11/02/09	REVISION 4
08/10/12	REVISION 5
01/01/14	REVISION 6

CITY OF CHICAGO
DRIVEWAY CONSTRUCTION SECTIONS
SHEET B-2-4
SCALE: NOT TO SCALE
DATE: 10/23/2006
DRAWN BY: CDOT
CHECKED BY: OK

DESIGN BY:										
DRAWN BY:										
CHECKED BY:										
APPROVED BY:		4	7/3/2023	ISSUED FOR BID						
CDOT/APPROVED BY:		NO.	DATE	REVISIONS	DES.	DRW.	CHK.	DCCO	CDOT	

TRANSYSTEMS
222 SOUTH RIVERSIDE PLAZA SUITE 610
CHICAGO, ILLINOIS 60606

SKIDMORE, OWINGS & MERRILL LLP
224 SOUTH MICHIGAN AVENUE, SUITE 1000
CHICAGO, ILLINOIS 60604

ARDMORE RODERICK
1500 W CARROLL AVE SUITE 300
CHICAGO, ILLINOIS 60607

LICENSED PROFESSIONAL ENGINEER — CARMEN J. DEAN — 062-062139 — STATE OF ILLINOIS

CHICAGO DEPARTMENT OF TRANSPORTATION
DIVISION OF ENGINEERING

STATE / LAKE LOOP ELEVATED STATION
200 NORTH STATE STREET, CHICAGO, IL 60601

SPEC. NO.

ADA CURB RAMP DETAILS

DRAWING NO.
C-532

CDOT PROJECT D-1-209 | DATE: 7/3/2023 | REVISION NO.

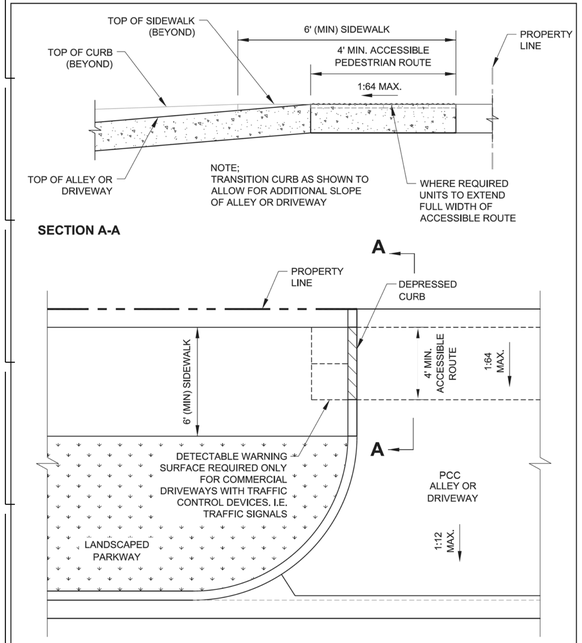

SECTION A-A

PLAN VIEW

DATE	REVISION
02/20/07	REVISION 1
11/15/07	REVISION 2
11/14/08	REVISION 3
11/02/09	REVISION 4
08/10/12	REVISION 5
01/01/14	REVISION 6

CITY OF CHICAGO
ALLEY & DRIVEWAY DETAIL FOR REDUCED WIDTH PEDESTRIAN ACCESS ROUTE

SCALE: NOT TO SCALE
DATE: 10/23/2006

SHEET B-2-5

DRAWN BY: CDOT
CHECKED BY: GK

SLOPE CONVERSION CHART

% SLOPE	SLOPE RATIO	INCHES PER FOOT	DECIMAL FEET PER FOOT
16.67%	1:6	2"	0.167'
10%	1:10	1 1/4"	0.104'
8.33%	1:12	1"	0.083'
7.14%	1:14	7/8"	0.073'
5%	1:20	5/8"	0.052'
4.17%	1:24	1/2"	0.042'
2%	1:50	1/4"	0.021'
1.56%	1:64	3/16"	0.016'

DATE	REVISION
02/20/07	REVISION 1
11/15/07	REVISION 2
11/14/08	REVISION 3
11/02/09	REVISION 4
08/10/12	REVISION 5

CITY OF CHICAGO
CONVERSION CHARTS

SCALE: NOT TO SCALE
DATE: 10/23/2006

SHEET B-3-1

DRAWN BY: CDOT
CHECKED BY: LCM

GENERAL NOTES:

1. THE DETECTABLE WARNING USED SHALL BE CHOSEN FROM THE CHICAGO DEPARTMENT OF TRANSPORTATION LIST OF APPROVED DETECTABLE WARNING PRODUCTS (AVAILABLE ON THE CITY OF CHICAGO WEBSITE). IT IS NOT ACCEPTABLE TO INSTALL TWO DIFFERENT DETECTABLE WARNING PRODUCTS ADJACENT TO ONE ANOTHER AT ANY LOCATION, IN THE CENTRAL BUSINESS DISTRICT, GRANITE OR OTHER SPECIALTY PAVING MATERIALS MAY BE SUBMITTED TO THE COMMISSIONER FOR APPROVAL.

2. THE DETECTABLE WARNING MUST BE INSTALLED A MAXIMUM OF 8" OR LESS FROM FACE OF CURB (SEE DETAIL SHEET B-4-2).

3. THE DETECTABLE WARNING MUST COVER FULL WIDTH OF RAMP EXCLUDING SIDE FLARES FOR A MINIMUM UNOBSTRUCTED DEPTH OF 24". THE DETECTABLE WARNING LOCATED ON THE SURFACES OF RAMPS IS TYPICALLY ORIENTED PERPENDICULAR TO THE RUN OF THE RAMP UNLESS SPECIAL CIRCUMSTANCES OCCUR (SEE DETAIL SHEET B-1-5). THE DETECTABLE WARNING MUST BE PROVIDED FOR A MINIMUM DEPTH OF 24" FOR THE ENTIRE LENGTH OF THE SIDEWALK WHERE THE SIDEWALK IS FLUSH WITH THE STREET (DEPRESSED CURB OR FLUSH TRANSITION). IF IT IS NECESSARY TO CUT A UNIT(S) IN THE PROVISION OF A COMPLIANT RAMP OR SIDEWALK WITH 24" MINIMUM DEPTH OF DETECTABLE WARNING, THE UNITS SHALL BE CUT IN A NEAT AND WORKMAN LIKE MANNER PER MANUFACTURER'S REQUIREMENTS WITH A MINIMUM OF THREE PINS OR ANCHOR POINTS (WHERE APPLICABLE). THE UNITS SHALL BE ARRANGED SO THAT THE CUT UNITS ARE LARGE ENOUGH TO BE PROPERLY AND ADEQUATELY SECURED. CUT UNITS SHALL NOT BE USED UNLESS ALL OTHER DESIGN OPTIONS HAVE BEEN EXHAUSTED. THE USE OF SALVAGE PIECES FROM UNITS THAT ARE CUT WILL NOT BE PERMITTED WITHOUT WRITTEN APPROVAL OF THE COMMISSIONER. CUT UNIT SALVAGE PIECES NOT APPROVED FOR USE MUST BE REMOVED FROM THE SITE AND DISPOSED OF PROPERLY.

4. WHERE APPLICABLE, A COMBINATION OF STRAIGHT AND RADIAL DETECTABLE WARNING UNITS MAY BE USED ON COMPOUND AND LARGE RADII. CONTRACTOR MUST MAKE THIS DETERMINATION AND VERIFY IN FIELD.

5. THE DETECTABLE WARNING MUST CONTRAST WITH ADJACENT PAVEMENT. IF LIGHT COLORED PAVEMENT IS USED THE DETECTABLE WARNING COLOR SHALL BE RED. IF A DARK COLORED PAVEMENT IS USED THE DETECTABLE WARNING COLOR SHALL BE YELLOW. CONTRACTOR TO VERIFY THAT PROPER CONTRAST IS OBTAINED.

6. PRIOR TO PLACING CONCRETE FOR DEPRESSED CURBS, RAMPS, OR SIDEWALKS THE CONTRACTOR SHALL VERIFY THAT LAYOUT OR DESIGN COMPLIES WITH THE REQUIREMENTS OF THE CDOT ADA STANDARDS.

7. RAMP WIDTH MUST BE A MINIMUM OF 6'-0" AND IN INCREMENTS OF 1'-0", EXCEPT WHEN USING THE PERPENDICULAR RAMP AT CORNER (OR OTHER SPECIAL CDOT APPROVED CONDITIONS), WHICH HAS A MINIMUM WIDTH OF 4'-0".

8. THE MAXIMUM ALLOWABLE RAMP RUNNING SLOPE IS 1:14, MEASURED AT ANY PORTION OF THE RAMP. IF POSSIBLE, A MORE GRADUAL SLOPE SHALL BE USED. GRADE BREAKS AT THE TOP AND BOTTOM OF RAMPS SHALL BE PERPENDICULAR TO THE DIRECTION OF RAMP RUN.

9. THE MAXIMUM ALLOWABLE RAMP CROSS SLOPE IS 1:64, MEASURED AT ANY PORTION OF THE RAMP. IF POSSIBLE, A MORE GRADUAL SLOPE SHALL BE USED.

10. THE MAXIMUM ALLOWABLE RAMP LANDING SLOPE IS 1:64, MEASURED AT ANY LOCATION AND IN ANY DIRECTION ON THE LANDING. THE RAMP LANDING WIDTH SHALL MATCH THE FULL WIDTH OF THE RAMP FOR A MINIMUM UNOBSTRUCTED DEPTH OF 4'-0". RAMP LANDINGS SHALL BE PROVIDED AT THE TOP AND/OR BOTTOM OF RAMPS WHERE TURNING IS REQUIRED.

11. RAMP SIDE FLARES SHALL BE INSTALLED AT ANY LOCATION WHERE THE SURFACE ADJACENT TO THE RAMP SURFACE IS INTENDED FOR PEDESTRIAN USE. TRIPPING HAZARDS, INCLUDING STEPS, DROP-OFFS, OR CURBS SHALL NOT BE LOCATED WITHIN THE LIMITS OF THE SIDEWALK. RAMP SIDE FLARES ARE NOT REQUIRED WHERE THE SURFACE ADJACENT TO THE RAMP SURFACE IS LANDSCAPED OR IS OCCUPIED BY A BARRIER THAT BLOCKS PEDESTRIAN ACCESS. EXCEPTIONS TO THIS RULE MAY BE SUBMITTED TO THE COMMISSIONER FOR APPROVAL.

DATE	REVISION
02/20/07	REVISION 1
11/15/07	REVISION 2
11/14/08	REVISION 3
11/02/09	REVISION 4
08/10/12	REVISION 5

CITY OF CHICAGO
GENERAL NOTES

SCALE: NOT TO SCALE
DATE: 10/23/2006

SHEET B-3-2

DRAWN BY: CDOT
CHECKED BY: LCM

GENERAL NOTES (CONTINUED):

12. UTILITIES, SUCH AS LIGHT POLES, TRAFFIC POLES AND HYDRANTS, MAY BE LOCATED IN THE FLARE OF THE RAMP BUT ARE NOT ALLOWED ON THE RAMP SURFACE OR LANDING AREAS. EXISTING UTILITY STRUCTURE LIDS MAY REMAIN WITHIN THE FLARE OR ON THE SURFACE OF THE RAMP IF THE REQUIREMENTS OF GENERAL NOTE #19 ARE MET.

13. ALL LOCATIONS WITH TYPE 4 OR TYPE B CURB (EXCEPT ALLEY APRONS) SHALL BE CONSTRUCTED AS CURB AND GUTTER TYPE BV.12 THROUGH THE LIMITS OF THE CORNER AND THE CURB RAMPS.

14. ALTERATIONS SHALL NOT DECREASE THE ACCESSIBILITY TO EXISTING FACILITIES, SIDEWALKS LEADING TO EXISTING FACILITIES, OR DOOR OR GATE ACCESS POINTS TO FACILITIES. THE ELEVATION AT THE EXISTING PROPERTY LINE OR FACILITY ACCESS POINT SHALL BE MAINTAINED AT A MINIMUM. ANY ALTERATIONS ADJACENT TO OR AFFECTING A FACILITY ACCESS POINT SHALL RESULT IN IMPROVED ACCESS OR AT A MINIMUM A REPLICATION OF EXISTING CONDITIONS, INCLUDING SIDEWALK SLOPES AND SURFACE CONDITIONS. FACILITIES INCLUDE, BUT ARE NOT LIMITED TO PRIVATE BUSINESSES, PUBLIC BUILDINGS, RESIDENCES, BUS STOPS, PUBLIC BENCHES, PAY PHONES, AND PARKING METERS.

15. THE MINIMUM CROSSWALK WIDTH IS 6'-0". CROSSWALKS SHALL BE LOCATED AS SHOWN IN THE PLAN SHEETS DEPENDING ON THE TYPE OF CURB RAMP USED, BEYOND THE CURB FACE AT THE BASE OF CURB RAMPS, A CLEAR SPACE OF 4'-0" BY 4'-0" MINIMUM SHALL BE PROVIDED WITHIN THE STRIPES OF THE CROSSWALK (WHERE PROVIDED).

16. IF SIDEWALK AND ALLEY ARE AT THE SAME GRADE, A RAMP IS NOT REQUIRED. IF SIDEWALK AND DRIVEWAY ARE AT THE SAME GRADE, A RAMP IS NOT REQUIRED BUT DETECTABLE WARNING UNITS ARE STILL REQUIRED IF THE DRIVEWAY HAS TRAFFIC CONTROL DEVICES (I.E. TRAFFIC SIGNALS).

17. MAIN LINE SIDEWALK SHALL HAVE A MAXIMUM CROSS SLOPE NOT TO EXCEED 1:64 FOR THE FULL WIDTH OF WALK UNLESS OTHERWISE APPROVED BY THE COMMISSIONER. WHERE TURNING IS REQUIRED AND WHERE SIDEWALKS INTERSECT, THE SLOPE OF THE SIDEWALK SHALL NOT EXCEED 1:64 IN ANY DIRECTION.

18. MAIN LINE SIDEWALK RUNNING SLOPES SHALL NOT EXCEED 1:24 OR THE GENERAL GRADE ESTABLISHED FOR THE ADJACENT STREET, WHICH EVER IS HIGHER.

19. THERE SHALL BE NO VERTICAL LEVEL DIFFERENCES BETWEEN SURFACES GREATER THAN 1/4" ON THE MAIN LINE SIDEWALK. THERE SHALL BE NO HORIZONTAL GAPS OR OPENINGS GREATER THAN 1/2" ON THE MAIN LINE SIDEWALK.

20. WHERE OBSTRUCTIONS EXIST ON THE MAINLINE SIDEWALK, THE CLEAR WIDTH OF USEABLE SIDEWALK SHALL NOT BE LESS THAN 4'-0". OBSTRUCTIONS INCLUDE, BUT ARE NOT LIMITED TO SIDEWALK BENCHES, FIRE HYDRANTS, SIGNAL OR LIGHT POLES, NEWSPAPER DISPENSERS, TRASH RECEPTACLES, AND UTILITY PEDESTALS.

21. CURB RAMPS AND LANDING (KEYSTONE) TO BE CONSTRUCTED WITH 8" THICK CONCRETE AT ALL TRAFFIC SIGNALIZED INTERSECTIONS AND INDUSTRIAL STREET INTERSECTIONS. AT ALL OTHER LOCATIONS, 5" THICK CONCRETE TO BE USED.

22. DEPRESSED CURB, RAMP, OR SIDEWALK DESIGNS OR LAYOUTS SHALL MAINTAIN OR IMPROVE EXISTING DRAINAGE AND THE EXISTING INTERSECTION GEOMETRY SHALL NOT BE MODIFIED WITHOUT CDOT APPROVAL.

23. ALL CONSTRUCTION DOCUMENTS MUST BE STAMPED BY A LICENSED ARCHITECT/LANDSCAPE ARCHITECT/ ENGINEER TO CERTIFY THAT THEY ARE IN ACCORDANCE WITH THE AMERICANS WITH DISABILITIES ACT (ADA) AND ALL CODES AND BUILDING ORDINANCES OF THE CITY OF CHICAGO AND THE STATE OF ILLINOIS.

24. NO DEVIATIONS FROM THESE STANDARDS ARE ALLOWED WITHOUT WRITTEN APPROVAL FROM THE COMMISSIONER.

DATE	REVISION
02/20/07	REVISION 1
11/15/07	REVISION 2
11/14/08	REVISION 3
11/02/09	REVISION 4
08/10/12	REVISION 5
01/01/14	REVISION 6

CITY OF CHICAGO
GENERAL NOTES (CONTINUED)

SCALE: NOT TO SCALE
DATE: 10/23/2006

SHEET B-3-3

DRAWN BY: CDOT
CHECKED BY: GK

		NO.	DATE	REVISIONS	DES.	DRW.	CHK.	DCCO	CDOT
DESIGN BY:									
DRAWN BY:									
CHECKED BY:									
APPROVED BY:		4	7/3/2023	ISSUED FOR BID					
CDOT/APPROVED BY:									

TRANSYSTEMS
222 SOUTH RIVERSIDE PLAZA SUITE 610
CHICAGO, ILLINOIS 60606

SKIDMORE, OWINGS & MERRILL LLP
224 SOUTH MICHIGAN AVENUE, SUITE 1000
CHICAGO, ILLINOIS 60604

ARDMORE RODERICK
1500 W CARROLL AVE SUITE 300
CHICAGO, ILLINOIS 60607

LICENSED PROFESSIONAL ENGINEER
CARMEN J. DEAN
062-062138
STATE OF ILLINOIS

CHICAGO DEPARTMENT OF TRANSPORTATION
DIVISION OF ENGINEERING

STATE / LAKE LOOP ELEVATED STATION
200 NORTH STATE STREET, CHICAGO, IL 60601

SPEC. NO.

ADA CURB RAMP DETAILS

DRAWING NO.
C-533

CDOT PROJECT D-1-209

DATE: 7/3/2023

REVISION NO.

ADA COMPLIANCE AND TRANSITION GUIDELINES
POLICY STATEMENT: ANY ALTERATION OF THE PUBLIC WAY MUST BE RESTORED IN AN ADA COMPLIANT MANNER

I. STREET/ALLEY RESTORATION

FOR ANY PROJECT WHERE, WITHIN THE PROJECT LIMITS, A CROSSWALK IS ENCOUNTERED OR WHERE THE PROJECT LIMITS TERMINATE WITHIN 4' OR LESS OF A CROSSWALK, THOSE CROSSWALKS AND THE ASSOCIATED CURB RAMPS MUST BE IMPROVED TO CURRENT ADA STANDARDS IF THEY ARE NOT COMPLIANT (SEE APPENDIX A.)

WHEN A PROJECT CALLS FOR ONLY AN INTERSECTION TO BE REPAVED, THE INTERSECTION LIMITS AS DEFINED BY THE AREA OUTLINED BY OUTERMOST CROSSWALK LINES AND ADJACENT CURB FACES AND ALL ADJOINING CROSSWALKS AND CURB RAMPS MUST BE IMPROVED TO CURRENT ADA STANDARDS IF THEY ARE NOT COMPLIANT (SEE APPENDIX A).

WHEN WORK IS LIMITED TO A SINGLE CORNER OF AN INTERSECTION, THE CURB RAMP MUST BE IMPROVED TO CURRENT ADA STANDARDS AND THE ADJACENT PAVEMENT MUST BE RESURFACED, AS NECESSARY TO PROVIDE FOR A FLUSH TRANSITION (SEE APPENDIX A).

WHEN ADA WORK IS LIMITED TO A SINGLE CORNER OF AN INTERSECTION, THE ADJACENT PAVEMENT MUST BE RESTORED (SEE APPENDIX A).

FOR ANY CONSTRUCTION WHERE, WITHIN THE PROJECT LIMITS, AN ALLEY APRON IS ENCOUNTERED, THE ASSOCIATED CURB RAMPS, ALLEY APRON, AND SIDEWALKS MUST BE IMPROVED TO CURRENT ADA STANDARDS IF THEY ARE NOT COMPLIANT (SEE APPENDIX A).

II. SIDEWALK INSTALLATION / REPAIRS / RECONSTRUCTION

THE LIMITS OF ANY MAINLINE SIDEWALK REPLACEMENT, GREATER THAN TEN FEET (10') IN LENGTH, THAT ABUT AN EXISTING RAMP, KEYSTONE, TRANSITION PANEL, AND/OR LANDING AREA (THIS TOTAL LENGTH INCLUDES THE PRIOR ELEMENTS), SHALL BE EXTENDED TO INCLUDE THE AFFECTED RAMPS AND THESE RAMPS SHALL BE RECONSTRUCTED TO CURRENT ADA STANDARDS. IN ADDITION, ALL NEWLY PLACED SIDEWALK TEN FEET (10') OR MORE IN LENGTH SHALL BE CONSTRUCTED IN ACCORDANCE WITH ALL CURRENT APPLICABLE STANDARDS WHICH INCLUDE PROVIDING A MINIMUM FOUR FEET (4') WIDTH ACCESSIBLE PATHWAY WITH A CROSS SLOPE NOT TO EXCEED 1:64 (SEE APPENDIX A).

III. GUIDELINES FOR TRANSITIONING TO EXISTING NON-COMPLIANT CONDITION

NEW SIDEWALK PLACEMENTS GREATER THAN TEN FEET IN CONTIGUOUS LENGTH:

THE LIMITS OF ANY MAINLINE SIDEWALK REPLACEMENT, GREATER THAN TEN FEET' (10') IN LENGTH, MUST BE EXTENDED FOR A MINIMUM FIVE ADDITIONAL FEET (5') EITHER SIDE IN ORDER TO PROVIDE A TRANSITION TO MATCH THE EXISTING SIDEWALK. THE LENGTH OF TRANSITION SHALL BE LENGTHENED AS NECESSARY TO ENSURE THAT THE RUNNING SLOPE OF THE TRANSITION DOES NOT EXCEED A SLOPE OF 1:24 (PREFERRED) OR 1:14 (MAXIMUM) AT ANY POINT.

NEW SIDEWALK REPLACEMENTS TEN FEET OR LESS IN CONTIGUOUS LENGTH (REPAIRS):

IT IS ACCEPTABLE PRACTICE TO MATCH ADJACENT SIDEWALKS AT THE EXISTING SLOPE.

CURB RAMP REPLACEMENTS

WHEN REPLACING AN ADA RAMP, THE SIDEWALK REPLACEMENT MUST EXTEND BEYOND THE LIMITS OF THE LANDING AREA AND/OR THE "KEYSTONE" A MINIMUM OF AN ADDITIONAL FIVE FEET (5') ON EITHER SIDE IN ORDER TO PROVIDE A TRANSITION TO MATCH THE EXISTING SIDEWALK. THE TRANSITION PANEL SHALL BE LENGTHENED AS NECESSARY TO ENSURE THAT THE RUNNING SLOPE OF THE TRANSITION PANEL DOES NOT EXCEED A SLOPE OF 1:24 (PREFERRED) OR 1:14 (MAXIMUM) AT ANY POINT.

NO EXCEPTIONS TO THE ABOVE WILL BE ALLOWED WITHOUT WRITTEN APPROVAL FROM THE COMMISSIONER.

City of Chicago Rahm Emanuel, Mayor Department of Transportation Division of Engineering www.cityofchicago.org

CDOT CHICAGO DEPARTMENT OF TRANSPORTATION

DATE	REVISION
02/20/07	REVISION 1
11/15/07	REVISION 2
11/14/08	REVISION 3
11/02/09	REVISION 4
08/10/12	REVISION 5
01/01/14	REVISION 6

CITY OF CHICAGO
ADA COMPLIANCE AND TRANSITION GUIDELINES
SHEET B-3-4
SCALE: NOT TO SCALE
DATE: 10/23/2006
DRAWN BY: CDOT
CHECKED BY: GK

STRAIGHT DETECTABLE WARNING UNITS

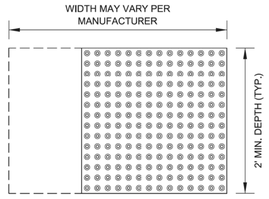

RADIAL DETECTABLE WARNING UNITS

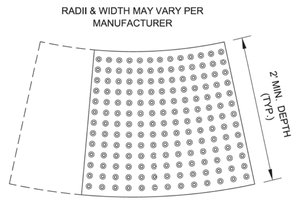

DETECTABLE WARNING UNIT SIZES

- VERIFY ALL DIMENSIONS WITH THE PRODUCT MANUFACTURER.
- IF USING RADIAL UNITS, VERIFY THAT THE CURB RADIUS MATCHES AVAILABLE UNIT RADII WITH THE PRODUCT MANUFACTURER.
- APPROVED LIST OF DETECTABLE WARNING PRODUCTS CAN BE FOUND ON CDOT'S WEBSITE (www.cityofchicago.org).

City of Chicago Rahm Emanuel, Mayor Department of Transportation Division of Engineering www.cityofchicago.org

CDOT CHICAGO DEPARTMENT OF TRANSPORTATION

DATE	REVISION
02/20/07	REVISION 1
11/15/07	REVISION 2
11/14/08	REVISION 3
11/02/09	REVISION 4
08/10/12	REVISION 5

CITY OF CHICAGO
DETECTABLE WARNING UNIT SIZES
SHEET B-4-1
SCALE: NOT TO SCALE
DATE: 10/23/2006
DRAWN BY: CDOT
CHECKED BY: LCM

GENERAL NOTE:
THE ROWS OF DOMES IN THE DETECTABLE WARNING MATERIAL MUST BE ALIGNED WITH THE PATH OF WHEELCHAIR TRAVEL WHICH IS REQUIRED TO BE PERPENDICULAR TO THE GRADE BREAK AT THE BOTTOM OF THE RAMP TO PERMIT TRACKING BETWEEN DOME ROWS. ON BLENDED TRANSITIONS OR FLUSH TRANSITIONS, WHERE RADIAL UNITS ARE SITUATED ABOUT THE CURB RADIUS, DOME ORIENTATION IS NOT SIGNIFICANT.

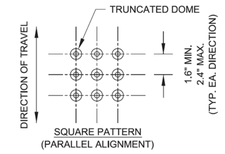

UNIT PATTERN & DOME DETAIL

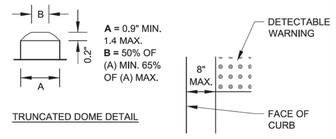

TYPICAL DETECTABLE WARNING PLACEMENT

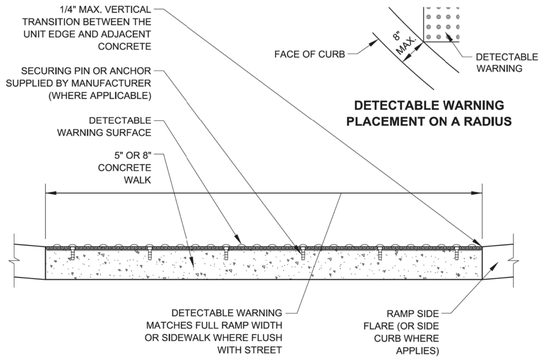

DETECTABLE WARNING UNIT SECTION

DETECTABLE WARNING PLACEMENT ON A RADIUS

City of Chicago Rahm Emanuel, Mayor Department of Transportation Division of Engineering www.cityofchicago.org

CDOT CHICAGO DEPARTMENT OF TRANSPORTATION

DATE	REVISION
02/20/07	REVISION 1
11/15/07	REVISION 2
11/14/08	REVISION 3
11/02/09	REVISION 4
08/10/12	REVISION 5

CITY OF CHICAGO
DETECTABLE WARNING UNIT DETAILS
SHEET B-4-2
SCALE: NOT TO SCALE
DATE: 10/23/2006
DRAWN BY: CDOT
CHECKED BY: LCM

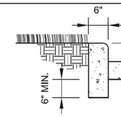

SIDE CURB - SECTION

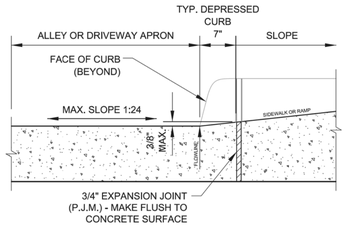

DEPRESSED CURB & GUTTER
AT ALLEY/DRIVEWAY APRON (TYPE 4 OR B CURB)

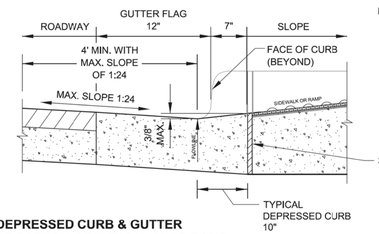

DEPRESSED CURB & GUTTER
AT BOTTOM OF TYPICAL CURB RAMP

NOTES FOR CURB & GUTTER DETAILS THIS SHEET:

A. CROSS SLOPE AT DEPRESSED CURB & GUTTER NOT TO EXCEED 1:64.

B. DETECTABLE WARNING SURFACE AT DRIVEWAYS REQUIRED ONLY FOR COMMERCIAL DRIVEWAYS WITH TRAFFIC CONTROL DEVICES, I.E. SIGNALS.

C. REFER TO *REGULATIONS FOR OPENINGS, CONSTRUCTION AND REPAIR IN THE PUBLIC WAY (CDOT)* FOR ADDITIONAL REQUIREMENTS FOR CURB AND GUTTER INSTALLATION.

D. RAMP SIDE FLARES SHALL BE INSTALLED AT ANY LOCATION WHERE THE SURFACE ADJACENT TO THE RAMP SURFACE IS INTENDED FOR PEDESTRIAN USE. TRIPPING HAZARDS, INCLUDING STEPS, DROP-OFFS, OR SIDE CURBS SHALL NOT BE LOCATED WITHIN THE LIMITS OF THE SIDEWALK.

E. 'P.J.M.' THIS SHEET REFERS TO PREFORMED JOINT MATERIAL.

City of Chicago Rahm Emanuel, Mayor Department of Transportation Division of Engineering www.cityofchicago.org

CDOT CHICAGO DEPARTMENT OF TRANSPORTATION

DATE	REVISION
02/20/07	REVISION 1
11/15/07	REVISION 2
11/14/08	REVISION 3
11/02/09	REVISION 4
08/10/12	REVISION 5

CITY OF CHICAGO
CURB & GUTTER DETAILS
SHEET B-4-3
SCALE: NOT TO SCALE
DATE: 10/23/2006
DRAWN BY: CDOT
CHECKED BY: LCM

DESIGN BY:										
DRAWN BY:										
CHECKED BY:										
APPROVED BY:		4	7/3/2023	ISSUED FOR BID						
CDOT/APPROVED BY:		NO.	DATE	REVISIONS	DES.	DRW.	CHK.	DCCO	CDOT	

TRANSYSTEMS
222 SOUTH RIVERSIDE PLAZA SUITE 610
CHICAGO, ILLINOIS 60606

SKIDMORE, OWINGS & MERRILL LLP
224 SOUTH MICHIGAN AVENUE, SUITE 1000
CHICAGO, ILLINOIS 60604

ARDMORE RODERICK
1500 W CARROLL AVE SUITE 300
CHICAGO, ILLINOIS 60607

LICENSED PROFESSIONAL ENGINEER
CARMEN J. DEAN
062-062138
STATE OF ILLINOIS

CHICAGO DEPARTMENT OF TRANSPORTATION
DIVISION OF ENGINEERING

STATE / LAKE LOOP ELEVATED STATION
200 NORTH STATE STREET, CHICAGO, IL 60601

SPEC. NO.

ADA CURB RAMP DETAILS

DRAWING NO.
C-534

CDOT PROJECT D-1-209

DATE: 7/3/2023

REVISION NO.

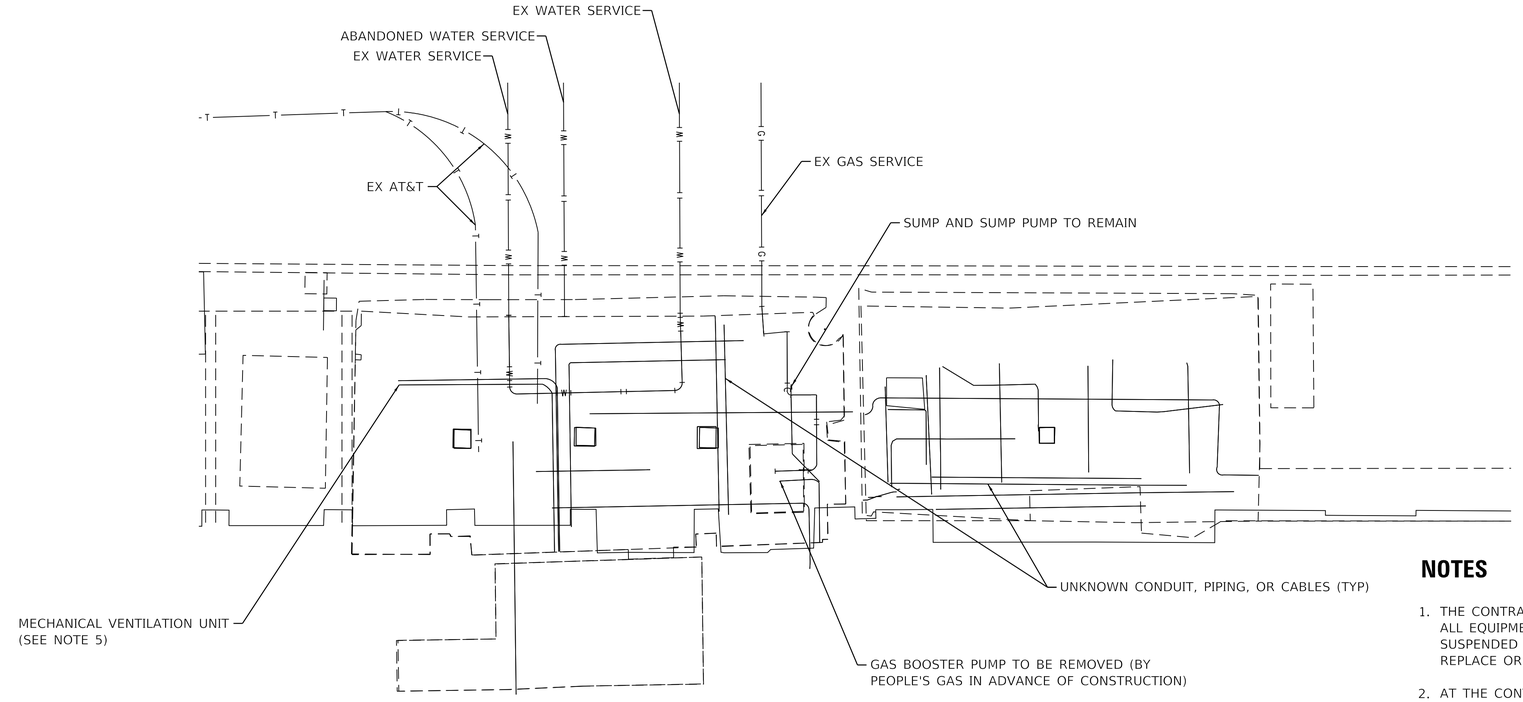

N

VAULT ALONG SOUTH SIDE OF LAKE ST
177 N STATE ST
(PAGE BROTHERS AND CHICAGO THEATRE)

NOTES

1. THE CONTRACTOR MUST DETACH, TEMPORARILY SUPPORT, AND REATTACH ALL EQUIPMENT, CONDUIT, PIPES, AND OTHER APPURTENANCES WHICH ARE SUSPENDED FROM THE VAULT CEILING OR WALLS DURING WORK TO REPLACE OR REPAIR THE CEILING OR WALLS.
2. AT THE CONTRACTOR'S DISCRETION, THESE FACILITIES MAY INSTEAD BE REMOVED AND REPLACED, PROVIDED THAT SUCH WORK MAINTAINS ALL ASPECTS OF BUILDING OPERATION AND FUNCTIONALITY AT ALL TIMES.
3. FOR PROPOSED SIDEWALK VAULT MODIFICATIONS, SEE SHEETS S-700 - S-707
4. REFER TO BOOK 3, APPENDIX G OF THE DETAILED SPECIFICATIONS FOR EXISTING VAULT PHOTOS.
5. THE SUSPENDED MECHANICAL VENTILATION UNIT ON THE WEST SIDE OF THE PAGE BROS BUILDING'S SIDEWALK VAULT IS COMED OWNED AND MAINTAINED. THE CONTRACTOR MUST CONTACT COMED TO REINSTALL THIS UNIT. IF COMED PROVIDES CONCRETE INSERTS FOR INSTALLATION IN THE VAULT SLAB, THE CONTRACTOR MUST PLACE THESE PER COMED'S LAYOUT REQUIREMENTS IN ADVANCE OF POURING THE CONCRETE.
6. PLEASE SEE PLUMBING PLANS FOR NEW WATER LAYOUT IN VAULT.

DESIGN BY:										
DRAWN BY:										
CHECKED BY:										
APPROVED BY:		4	7/3/2023	ISSUED FOR BID	BHH	BHH	MJL			
CDOT/APPROVED BY:		NO.	DATE	REVISIONS	DES.	DRW.	CHK.	DCCO	CDOT	

TRANSYSTEMS
222 SOUTH RIVERSIDE PLAZA SUITE 610
CHICAGO, ILLINOIS 60606

SKIDMORE, OWINGS & MERRILL LLP
224 SOUTH MICHIGAN AVENUE, SUITE 1000
CHICAGO, ILLINOIS 60604

MICHAEL J. LEU
062-055367
LICENSED PROFESSIONAL ENGINEER
ILLINOIS

CHICAGO DEPARTMENT OF TRANSPORTATION
DIVISION OF ENGINEERING

STATE / LAKE LOOP ELEVATED STATION
200 NORTH STATE STREET, CHICAGO, IL 60601

SPEC. NO.

EXISTING UTILITIES - SIDEWALK VAULT

DRAWING NO.
C-600

CDOT PROJECT D-1-209 | DATE: 7/3/2023 | REVISION NO.

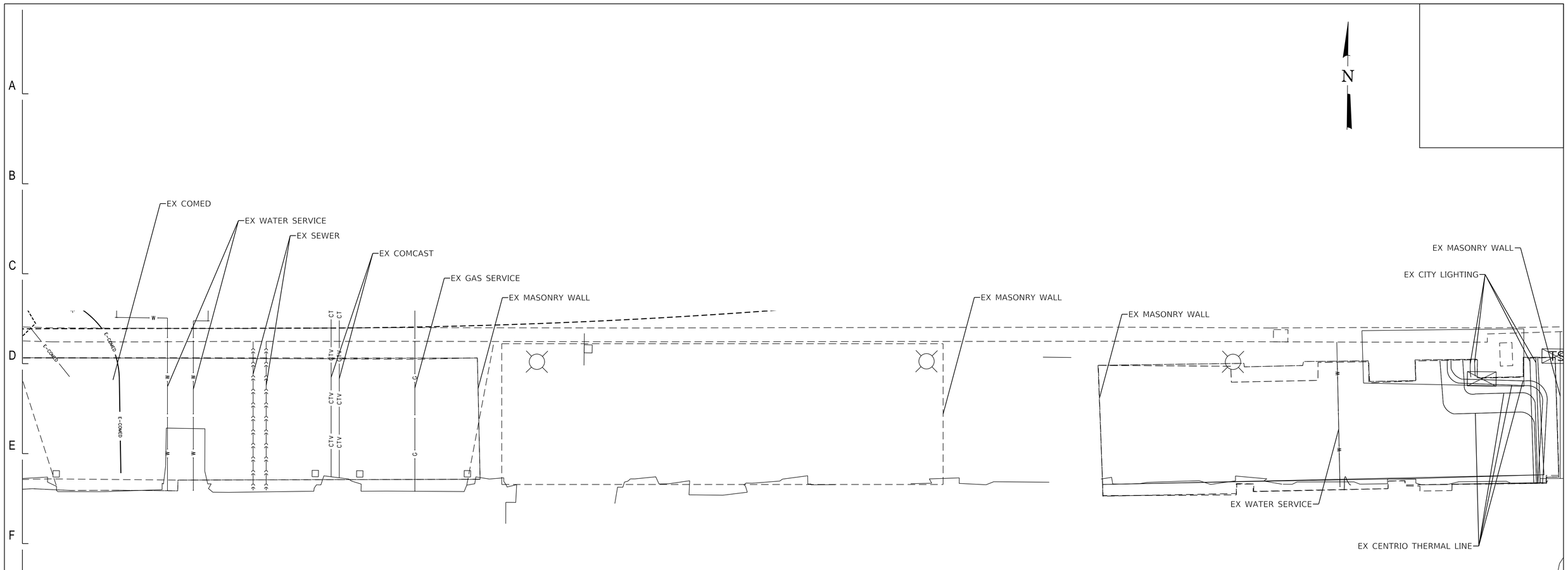

VAULTS ALONG SOUTH SIDE OF LAKE ST
190 N STATE ST
(ABC BUILDING)

NOTES

1. THE CONTRACTOR MUST DETACH, TEMPORARILY SUPPORT, AND REATTACH ALL EQUIPMENT, CONDUIT, PIPES, AND OTHER APPURTENANCES WHICH ARE SUSPENDED FROM THE VAULT CEILING OR WALLS DURING WORK TO REPLACE OR REPAIR THE CEILING OR WALLS.
2. AT THE CONTRACTOR'S DISCRETION, THESE FACILITIES MAY INSTEAD BE REMOVED AND REPLACED, PROVIDED THAT SUCH WORK MAINTAINS ALL ASPECTS OF BUILDING OPERATION AND FUNCTIONALITY AT ALL TIMES.
3. FOR PROPOSED SIDEWALK VAULT MODIFICATIONS, SEE SHEETS S-700 - S-707
4. REFER TO BOOK 3, APPENDIX G OF THE DETAILED SPECIFICATIONS FOR EXISTING VAULT PHOTOS.

DESIGN BY:										
DRAWN BY:										
CHECKED BY:										
APPROVED BY:		4	7/3/2023	ISSUED FOR BID	BHH	BHH	MJL		
CDOT/APPROVED BY:		NO.	DATE	REVISIONS	DES.	DRW.	CHK.	DCCO	CDOT

TRANSYSTEMS
222 SOUTH RIVERSIDE PLAZA SUITE 610
CHICAGO, ILLINOIS 60606

SKIDMORE, OWINGS & MERRILL LLP
224 SOUTH MICHIGAN AVENUE, SUITE 1000
CHICAGO, ILLINOIS 60604

MICHAEL J. LEV
062-055367
LICENSED PROFESSIONAL ENGINEER
ILLINOIS

CHICAGO DEPARTMENT OF TRANSPORTATION
DIVISION OF ENGINEERING

STATE / LAKE LOOP ELEVATED STATION
200 NORTH STATE STREET, CHICAGO, IL 60601

EXISTING UTILITIES - SIDEWALK VAULT

CDOT PROJECT D-1-209 | DATE: 7/3/2023

SPEC. NO.

DRAWING NO. C-601

REVISION NO.

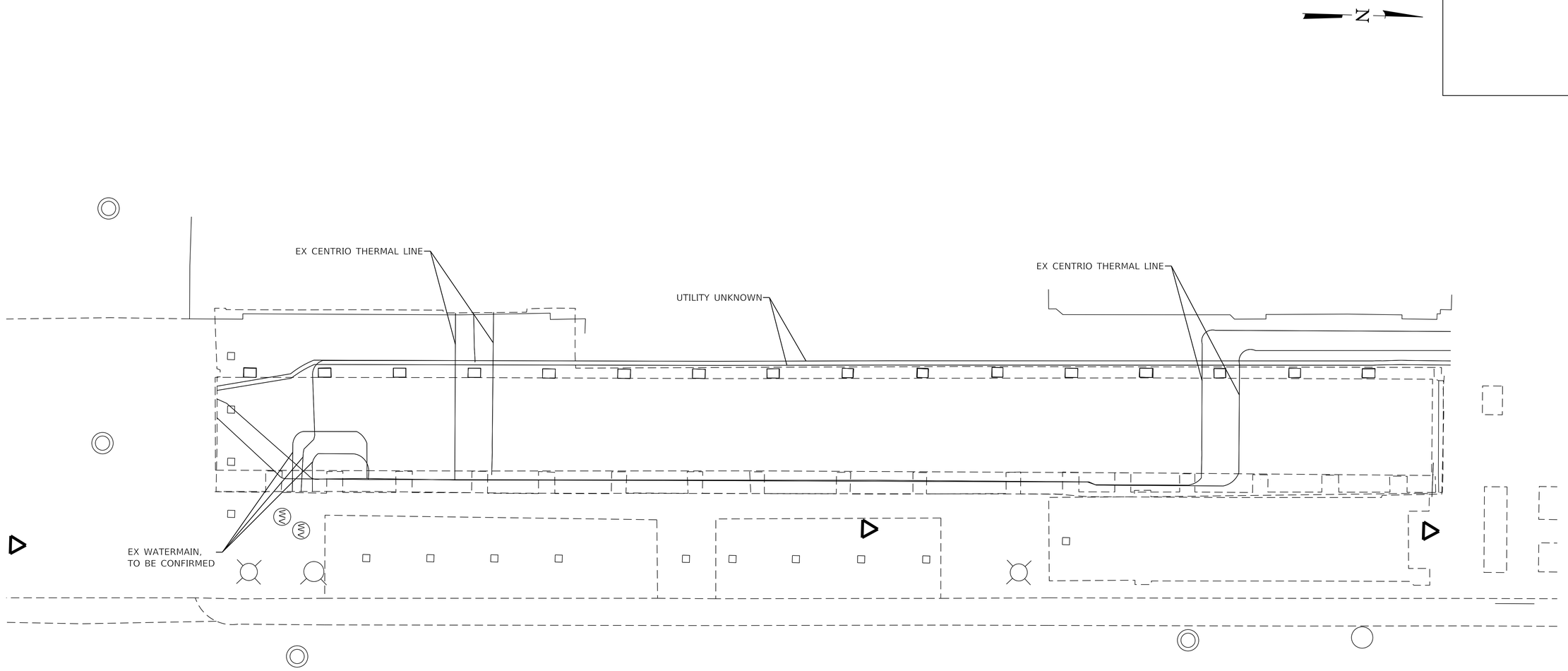

VAULT ALONG WEST SIDE OF STATE ST
190 N STATE ST
(ABC BUILDING)

NOTES

1. THE CONTRACTOR MUST DETACH, TEMPORARILY SUPPORT, AND REATTACH ALL EQUIPMENT, CONDUIT, PIPES, AND OTHER APPURTENANCES WHICH ARE SUSPENDED FROM THE VAULT CEILING OR WALLS DURING WORK TO REPLACE OR REPAIR THE CEILING OR WALLS.
2. AT THE CONTRACTOR'S DISCRETION, THESE FACILITIES MAY INSTEAD BE REMOVED AND REPLACED, PROVIDED THAT SUCH WORK MAINTAINS ALL ASPECTS OF BUILDING OPERATION AND FUNCTIONALITY AT ALL TIMES.
3. FOR PROPOSED SIDEWALK VAULT MODIFICATIONS, SEE SHEETS S-700 - S-707
4. REFER TO BOOK 3, APPENDIX G OF THE DETAILED SPECIFICATIONS FOR EXISTING VAULT PHOTOS.

DESIGN BY:										
DRAWN BY:										
CHECKED BY:										
APPROVED BY:		4	7/3/2023	ISSUED FOR BID	BHH	BHH	MJL			
CDOT/APPROVED BY:		NO.	DATE	REVISIONS	DES.	DRW.	CHK.	DCCO	CDOT	

TRANSYSTEMS
222 SOUTH RIVERSIDE PLAZA SUITE 610
CHICAGO, ILLINOIS 60606

SKIDMORE, OWINGS & MERRILL LLP
224 SOUTH MICHIGAN AVENUE, SUITE 1000
CHICAGO, ILLINOIS 60604

MICHAEL J. LEV
062-055367
LICENSED PROFESSIONAL ENGINEER
OF ILLINOIS

CHICAGO DEPARTMENT OF TRANSPORTATION
DIVISION OF ENGINEERING

STATE / LAKE LOOP ELEVATED STATION
200 NORTH STATE STREET, CHICAGO, IL 60601

SPEC. NO.

EXISTING UTILITIES - SIDEWALK VAULT

DRAWING NO.
C-602

CDOT PROJECT D-1-209

DATE: 7/3/2023

REVISION NO.

WATER MAIN GENERAL NOTES

1. WATER SHUTOFFS MUST ONLY OCCUR BETWEEN THE HOURS OF 7:00 PM AND 5:00 AM AND/OR WITH THE APPROVAL OF THE COMMISSIONER. THE CONTRACTOR WILL COORDINATE THE SHUTOFFS WITH BUSINESS OWNERS SO AS NOT TO IMPACT THEIR OPERATIONS.
2. AFTER NEW WATER MAIN IS APPROVED, REMOVE ALL TEMPORARY HYDRANT AND FITTINGS.
3. CONTRACTOR IS RESPONSIBLE FOR ALL FLUSHING, TESTING, AND CHLORINATION OF NEW WATER MAINS. SEE SPECIFICATIONS FOR REQUIREMENTS AND PROCEDURES.
4. THE CONTRACTOR MUST SUBMIT A COMPLETE LIST OF THE SHOP DRAWINGS (SUBMITTALS) FOR ALL WATER MAIN MATERIALS TO BE USED TO COMPLETE THE WATER MAIN INSTALLATION TO THE FORCE ACCOUNT CONSTRUCTION MANAGER AT FACM@CTRWATER.NET FOR REVIEW. ONCE THE LIST IS APPROVED, THE SHOP DRAWINGS (SUBMITTALS) SHALL BE SENT AT LEAST 60 DAYS PRIOR TO THE START OF WORK TO THE FORCE ACCOUNT CONSTRUCTION MANAGER AT FACM@CTRWATER.NET FOR REVIEW.
5. THE CONTRACTOR MUST NOTIFY FORCE ACCOUNT CONSTRUCTION MANAGER, AT FACM@CTRWATER.NET , TWO (2) WEEKS PRIOR TO THE START OF THE WATER MAIN WORK, SO A RESIDENT ENGINEER CAN BE ASSIGNED TO THE PROJECT.
6. THE CONTRACTOR MUST OBTAIN A "B-PERMIT" PRIOR TO CONSTRUCTION FROM THE CITY OF CHICAGO, DEPARTMENT OF BUILDINGS, PLUMBING PERMIT AND PLAN SECTION, CITY HALL, 121 N LASALLE STREET, ROOM 906, (312) 744-7063.
7. THE CONTRACTOR MUST SUBMIT AS-BUILT DRAWINGS. THE AS-BUILT DRAWINGS SHOULD BE SUBMITTED TO THE FORCE ACCOUNT CONSTRUCTION MANAGER AT FACM@CTRWATER.NET. THE AS-BUILT DRAWINGS MUST ALSO INCLUDE THE MATERIALS USED AND DIMENSIONS OF ALL UNDERGROUND WORK THAT IS REQUIRED FOR IEPA COMPLIANCE. THE DWM WILL NOT PERFORM THE SOURCE AND FINAL CONNECTIONS UNTIL AS-BUILT DRAWINGS ARE REVIEWED AND APPROVED BY THIS DEPARTMENT. FAILURE TO COMPLY WITH THESE REQUIREMENTS MAY RESULT IN ADDITIONAL EXPENSES TO THE PROJECT TO VERIFY THAT ALL WORK CONFORMS TO THE DWM'S STANDARDS.
8. IT IS REQUIRED THAT THE FORCE ACCOUNT CONSTRUCTION MANAGER BE CONTACTED AT FACM@CTRWATER.NET TWO (2) WEEKS PRIOR TO THE ANTICIPATED CONSTRUCTION DATE SO A RESIDENT ENGINEER CAN BE ASSIGNED TO THE PROJECT.
9. ALL NEW CURB INSTALLATION ADJACENT TO FIRE HYDRANTS MUST BE PAINTED 'SAFETY YELLOW' FOR 15 FEET ON EACH SIDE OF THE FIRE HYDRANT EXCEPT WHERE THE 15 FOOT DIMENSION INTERSECTS A CROSSWALK, DRIVEWAY OR SIMILAR FEATURE. IN NO CASE SHALL THE INSTALLATION OF ANY PROPOSED FACILITY BE CLOSER THAN FIVE (5) FEET FROM A FIRE HYDRANT OR FIRE HYDRANT LEAD.
10. CDWM WILL OPERATE ALL EXISTING VALVES AND ALL PROPOSED VALVES, ONCE THEY HAVE BEEN APPROVED AND BROUGHT INTO SERVICE.
11. TEST PITS MUST BE EXCAVATED IN ADCANCE OF PIPELINE CONSTRUCTION IN ORDER TO CONFIRM DEPTH AND LOCATION OF EXISTING UTILITIES AND WHEN DIRECTED BY THE COMMISSIONER.
12. IF ANY PUBLIC OR PRIVATE UTILITIES CROSS THE WATER MAIN TRENCH AND MUST REMAIN IN PLACE, THE CONTRACTOR MUST PROTECT SAID UTILITY IN CONFORMANCE WITH THE SPECIFICATIONS OR AS DIRECTED BY THE COMMISSIONER.
13. FITTINGS AND THEIR LOCATIONS INDICATED ON THE DRAWINGS ARE TENTATIVE. THE CONTRACTOR MUST COMPLETE THE INSTALLATION WITH THE NECESSARY FITTINGS DICTATED BY FIELD CONDITIONS.
14. WATER MAIN AND FITTINGS LOCATIONS SHOWN ON THE DRAWINGS FOR THE NEW WATER MAINS AND APPURTENANCES MAY BE CHANGED BY THE COMMISSIONER DUE TO FIELD CONDITIONS. NO ADDITIONAL COMPENSATION WILL BE ALLOWED FOR SUCH CHANGES, UNLESS PREVIOUSLY APPROVED BY THE COMMISSIONER.
15. THE CONTRACTOR MUST PROVIDE THRUST RESTRAINTS IN ACCORDANCE WITH THE SPECIFICATIONS. THE CONTRACTOR MUST FURNISH AND INSTALL MECHANICAL JOINT THRUST RESTRAINT GLANDS AT ALL FITTINGS AND MECHANICAL JOINTS.
16. THE CONTRACTOR MUST VERIFY THE OPERATION OF EVERY VALVE NECESSARY FOR THE REQUIRED WATER MAIN SHUT DOWN FOR EACH PIPE SECTION. FOR VALVES OR WATER MAINS UNDER 16-INCHES IN DIAMETER, THE WORK MUST BE DONE UNDER THE DIRECT SUPERVISION OF A DEPARTMENT REPRESENTATIVE AT LEAST 2 WEEKS PRIOR TO THE START OF THE JOB. A 24 HOUR ADVANCE NOTICE MUST BE GIVEN TO ALL CONSUMERS EFFECTED AND THE BUREAU OF OPERATIONS AND DISTRIBUTION. THE OPERATION OF ALL VALVES 16-INCHES IN DIAMETER AND LARGER MUST BE PERFORMED BY CITY FORCES PURSUANT TO A 72 HOUR ADVANCE NOTIFICATION TO THE DEPARTMENT. ANY VALVE FOUND NOT OPERABLE WILL BE REPAIRED OR REPLACED BY THE DEPARTMENT UNLESS DIRECTED OTHERWISE BY THE COMMISSIONER.

WATER MAIN GENERAL NOTES (CONTINUED)

17. IN INSTANCES WHERE CHLORINATION IS TO BE DONE AGAINST ANY EXISTING VALVE, AT THE TIME THAT THE EXISTING WATER MAIN IS BREACHED FOR FINAL CONNECTION, THE CONTRACTOR IS TO VERIFY THAT THE EXISTING VALVES ARE IN GOOD OPERATING CONDITION AND DO NOT LEAK. ANY LEAKING VALVE SHOULD BE BROUGHT TO THE COMMISSIONERS' ATTENTION AND BE REPAIRED OR REPLACED PRIOR TO MAKING PIPE CONNECTIONS TO THE EXISTING WATER MAIN. THE VALVE SHOULD REMAIN IN THE CLOSED POSITION UNTIL THE NEW WATER MAIN IS APPROVED FOR SERVICE.
18. ALL OPENINGS IN EXISITNG WATER MAINS MUST BE PLUGGED OR CAPPED WITH DUCTILE IRON FITTINGS UNTIL THE MAIN IS ABANDONED.
19. ALL VALVE BASINS MUST BE CONSTRUCTED OF PRE-CAST REINFORCED CONCRETE UNLESS DIRECTED OTHERWISE BY THE COMMISSIONER.
20. IF A STANDARD MECHANICAL JOINT SLEEVE DOES NOT FIT TO MAKE CONNECTION OF THE NEW PIPE TO THE EXISTING PIPE, A TRANSITION SLEEVE MUST BE USED. NO GRINDING OF THE EXISTING PIPE IS PERMITTED.
21. ABANDON EXISTING WATER MAINS IN ACCORDANCE WITH THE SPECIFICATIONS.

DESIGN BY:										
DRAWN BY:										
CHECKED BY:										
APPROVED BY:		4	7/3/2023	ISSUED FOR BID	AMK	AMK	ZMZ			
CDOT/APPROVED BY:		NO.	DATE	REVISIONS	DES.	DRW.	CHK.	DCCO	CDOT	

TRANSYSTEMS
222 SOUTH RIVERSIDE PLAZA SUITE 610
CHICAGO, ILLINOIS 60606

SKIDMORE, OWINGS & MERRILL LLP
224 SOUTH MICHIGAN AVENUE, SUITE 1000
CHICAGO, ILLINOIS 60604

MICHAEL J. LEVI
062-055367
LICENSED PROFESSIONAL ENGINEER
ILLINOIS

CHICAGO DEPARTMENT OF TRANSPORTATION
DIVISION OF ENGINEERING

STATE / LAKE LOOP ELEVATED STATION
200 NORTH STATE STREET, CHICAGO, IL 60601

SPEC. NO.

WATER MAIN NOTES

DRAWING NO. C-606

CDOT PROJECT D-1-209

DATE: 7/3/2023

REVISION NO.

STRUCTURE SCHEDULE

STRUCTURE NUMBER	ALIGNMENT	STATION	OFFSET	LT/RT	TYPE	FRAME & GRATE	RIM ELEV.	INVERT ELEVATIONS							
								NORTH	NE	EAST	SE	SOUTH	SW	WEST	NW
1	LAKE ST	16+79	23	RT	CB TYPE A, 4' DIA.	TYPE 1F, OPEN LID	13.57	8.57							
2	LAKE ST	16+43	22.5	LT	CB TYPE A, 4' DIA.	TYPE 1F, OPEN LID	13.62	8.62							
3	LAKE ST	18+29	11.7	LT	CB TYPE A, 4' DIA.	TYPE 1F, OPEN LID	14.53						5.72		
3A	LAKE ST	17+86	0	RT	MH TYPE B, 3' DIA.	TYPE 1F, OPEN LID	14.60	2.24		5.20		2.24		2.24	
3B	LAKE ST	18+21	10.3	RT	MH TYPE C, 3' DIA.	TYPE 1F, CLOSED LID	14.57			2.87 5.42				2.87	
4	LAKE ST	18+48	16.1	LT	MH TYPE A, 4' DIA.	TYPE 1F, CLOSED LID	14.51			5.55					5.55
5	LAKE ST	19+08	16.1	LT	MH TYPE A, 3' DIA.	TYPE 1F, CLOSED LID	14.07	5.85						5.85	
6	LAKE ST	19+09	12.8	LT	MH TYPE A, 4' DIA.	TYPE 1F, CLOSED LID	14.73			5.85		5.85			
7	LAKE ST	19+38	20.3	LT	CB TYPE A, 4' DIA.	TYPE 1F, OPEN LID	14.03	6.04							
8	LAKE ST	19+46	12.8	RT	MH TYPE A, 4' DIA.	TYPE 1F, CLOSED LID	14.47		6.04					6.04	
9	LAKE ST	19+52	21	LT	CB TYPE A, 4' DIA.	TYPE 1F, OPEN LID	14.14						6.14		

ADJUSTMENT SCHEDULE

STRUCTURE NUMBER	ALIGNMENT	STATION	OFFSET	LT/RT	UTILITY TYPE	ADJUSTMENT RESPONSIBILITY
1	LAKE	17+82.35	6.11	LT	ABOVENET	BY OTHERS
2	LAKE	19+51.49	9.81	RT	ABOVENET	BY OTHERS
3	STATE	102+85.70	11.44	LT	AT&T	BY OTHERS
4	STATE	104+36.45	10.73	LT	AT&T	BY OTHERS
5	LAKE	14+29.78	22.25	RT	CHICAGO SEWER	CONTRACTOR
6	LAKE	14+65.91	4.92	RT	CHICAGO SEWER	CONTRACTOR
7	LAKE	15+71.20	21.77	LT	CHICAGO SEWER	CONTRACTOR
8	LAKE	15+73.69	22.52	RT	CHICAGO SEWER	CONTRACTOR
9	LAKE	16+79.03	4.12	RT	CHICAGO SEWER	CONTRACTOR
10	LAKE	17+10.44	22.12	RT	CHICAGO SEWER	CONTRACTOR
11	LAKE	17+12.42	22.61	LT	CHICAGO SEWER	CONTRACTOR
12	LAKE	17+86.16	0.12	RT	CHICAGO SEWER	CONTRACTOR
13	LAKE	17+94.78	16.01	RT	CHICAGO SEWER	CONTRACTOR
14	LAKE	18+55.70	22.85	LT	CHICAGO SEWER	CONTRACTOR
15	STATE	101+10.08	32.04	RT	CHICAGO SEWER	CONTRACTOR
16	STATE	101+16.79	10.09	RT	CHICAGO SEWER	CONTRACTOR
17	STATE	101+17.97	31.98	RT	CHICAGO SEWER	CONTRACTOR
18	STATE	101+19.40	23.48	LT	CHICAGO SEWER	CONTRACTOR
19	STATE	101+21.12	32.54	LT	CHICAGO SEWER	CONTRACTOR
20	STATE	102+02.23	30.70	LT	CHICAGO SEWER	CONTRACTOR
21	STATE	102+02.38	23.31	LT	CHICAGO SEWER	CONTRACTOR
22	STATE	102+08.99	4.03	LT	CHICAGO SEWER	CONTRACTOR
23	STATE	102+25.03	7.12	RT	CHICAGO SEWER	CONTRACTOR
24	STATE	102+29.35	10.56	RT	CHICAGO SEWER	CONTRACTOR
25	STATE	102+29.47	31.08	RT	CHICAGO SEWER	CONTRACTOR
26	STATE	102+34.58	31.15	RT	CHICAGO SEWER	CONTRACTOR
27	STATE	103+89.26	7.99	LT	CHICAGO SEWER	CONTRACTOR
28	STATE	103+97.82	31.26	RT	CHICAGO SEWER	CONTRACTOR
29	STATE	103+99.88	4.51	LT	CHICAGO SEWER	CONTRACTOR
30	STATE	104+02.18	30.37	LT	CHICAGO SEWER	CONTRACTOR
31	STATE	104+04.61	31.21	RT	CHICAGO SEWER	CONTRACTOR
32	STATE	104+42.74	5.49	LT	CHICAGO SEWER	CONTRACTOR
33	STATE	104+58.46	7.08	LT	CHICAGO SEWER	CONTRACTOR
34	STATE	106+10.86	3.00	LT	CHICAGO SEWER	CONTRACTOR
35	STATE	105+68.67	0.47	RT	CHICAGO SEWER	CONTRACTOR
36	STATE	105+69.22	33.54	LT	CHICAGO SEWER	CONTRACTOR
37	STATE	105+72.35	36.86	RT	CHICAGO SEWER	CONTRACTOR
38	STATE	106+29.54	0.00	RT	CHICAGO SEWER	CONTRACTOR
39	LAKE	14+62.31	22.06	LT	CHICAGO WATER	CONTRACTOR
40	LAKE	15+78.43	8.98	RT	CHICAGO WATER	CONTRACTOR
41	LAKE	15+83.85	19.05	LT	CHICAGO WATER	CONTRACTOR
42	LAKE	15+87.97	9.01	RT	CHICAGO WATER	CONTRACTOR
43	LAKE	17+24.06	21.61	LT	CHICAGO WATER	CONTRACTOR
44	LAKE	17+25.08	26.94	LT	CHICAGO WATER	CONTRACTOR
45	LAKE	17+31.79	19.29	LT	CHICAGO WATER	CONTRACTOR
46	LAKE	18+49.33	20.37	LT	CHICAGO WATER	CONTRACTOR
47	LAKE	18+94.86	11.11	RT	CHICAGO WATER	CONTRACTOR
48	LAKE	18+98.55	13.29	RT	CHICAGO WATER	CONTRACTOR
49	LAKE	19+00.89	20.52	LT	CHICAGO WATER	CONTRACTOR
50	LAKE	19+06.28	13.32	RT	CHICAGO WATER	CONTRACTOR
51	STATE	102+23.02	26.38	LT	CHICAGO WATER	CONTRACTOR
52	STATE	102+26.49	18.23	LT	CHICAGO WATER	CONTRACTOR
53	STATE	102+26.58	24.44	LT	CHICAGO WATER	CONTRACTOR
54	STATE	102+29.56	26.22	LT	CHICAGO WATER	CONTRACTOR
55	STATE	102+40.22	20.54	LT	CHICAGO WATER	CONTRACTOR
56	STATE	103+02.61	28.59	LT	CHICAGO WATER	CONTRACTOR
57	STATE	104+66.62	28.14	LT	CHICAGO WATER	CONTRACTOR
58	STATE	105+59.86	20.76	RT	CHICAGO WATER	CONTRACTOR
59	STATE	105+72.41	20.77	RT	CHICAGO WATER	CONTRACTOR
60	LAKE	15+00.03	18.27	LT	CITY ELECTRIC	CONTRACTOR
61	LAKE	16+14.96	18.03	LT	CITY ELECTRIC	CONTRACTOR
62	LAKE	17+37.89	17.84	LT	CITY ELECTRIC	CONTRACTOR
63	LAKE	17+53.06	16.55	RT	CITY ELECTRIC	CONTRACTOR
64	LAKE	18+32.73	19.47	LT	CITY ELECTRIC	CONTRACTOR
65	LAKE	20+12.66	17.91	LT	CITY ELECTRIC	CONTRACTOR
66	LAKE	21+12.12	17.37	LT	CITY ELECTRIC	CONTRACTOR
67	STATE	101+80.14	30.18	LT	CITY ELECTRIC	CONTRACTOR
68	STATE	102+46.58	30.14	LT	CITY ELECTRIC	CONTRACTOR
69	STATE	102+48.29	28.28	RT	CITY ELECTRIC	CONTRACTOR
70	STATE	103+01.80	14.67	RT	CITY ELECTRIC	CONTRACTOR
71	STATE	103+84.90	29.03	RT	CITY ELECTRIC	CONTRACTOR
72	STATE	103+85.90	30.11	LT	CITY ELECTRIC	CONTRACTOR
73	STATE	104+52.05	30.04	LT	CITY ELECTRIC	CONTRACTOR
74	STATE	104+59.79	29.35	RT	CITY ELECTRIC	CONTRACTOR
75	STATE	104+80.91	30.20	LT	CITY ELECTRIC	CONTRACTOR
76	STATE	106+14.30	24.95	RT	CITY ELECTRIC	CONTRACTOR
77	STATE	105+47.82	29.68	RT	CITY ELECTRIC	CONTRACTOR
78	STATE	105+72.72	25.25	RT	CITY ELECTRIC	CONTRACTOR
79	LAKE	14+36.99	14.58	RT	COMCAST	BY OTHERS
80	LAKE	14+81.95	9.46	LT	COMCAST	BY OTHERS
81	LAKE	14+87.30	9.50	LT	COMCAST	BY OTHERS
82	LAKE	15+81.49	17.15	RT	COMCAST	BY OTHERS
83	LAKE	18+48.77	9.86	LT	COMCAST	BY OTHERS
84	LAKE	18+59.69	10.11	LT	COMCAST	BY OTHERS
85	STATE	104+23.81	0.81	LT	COMCAST	BY OTHERS
86	STATE	105+53.96	10.13	RT	COMCAST	BY OTHERS
87	STATE	105+53.97	0.22	LT	COMCAST	BY OTHERS
88	LAKE	15+59.36	12.80	LT	COMED	BY OTHERS
89	LAKE	15+63.73	21.59	RT	COMED	BY OTHERS
90	LAKE	17+70.82	16.47	LT	COMED	BY OTHERS
91	LAKE	17+71.96	17.94	RT	COMED	BY OTHERS
92	LAKE	17+75.66	2.85	RT	COMED	BY OTHERS
93	LAKE	18+06.45	23.78	LT	COMED	BY OTHERS
94	LAKE	18+07.31	13.41	LT	COMED	BY OTHERS
95	LAKE	18+10.31	20.53	RT	COMED	BY OTHERS
96	LAKE	18+69.94	11.42	RT	CTA	CONTRACTOR
97	LAKE	18+73.41	11.15	LT	CTA	CONTRACTOR
98	LAKE	19+33.81	21.46	LT	COMED	BY OTHERS
99	LAKE	19+39.50	13.44	LT	COMED	BY OTHERS
100	LAKE	19+41.68	21.65	LT	COMED	BY OTHERS
101	LAKE	19+54.26	19.66	RT	COMED	BY OTHERS
102	LAKE	19+57.25	33.36	LT	COMED	BY OTHERS
103	LAKE	19+67.53	33.66	LT	COMED	BY OTHERS
104	LAKE	19+81.87	33.46	LT	COMED	BY OTHERS
105	LAKE	19+97.19	19.73	RT	COMED	BY OTHERS
106	LAKE	20+51.23	21.27	RT	COMED	BY OTHERS
107	LAKE	21+82.00	22.51	RT	COMED	BY OTHERS
108	LAKE	21+84.42	21.11	LT	COMED	BY OTHERS
109	LAKE	21+87.21	13.39	LT	COMED	BY OTHERS
110	STATE	101+76.36	27.73	RT	COMED	BY OTHERS
111	STATE	103+57.35	18.24	LT	COMED	BY OTHERS
112	STATE	103+58.61	26.25	RT	COMED	BY OTHERS
113	STATE	104+78.33	18.28	LT	COMED	BY OTHERS
114	LAKE	14+20.22	14.01	RT	CTA	CONTRACTOR
115	STATE	104+52.69	6.34	RT	CTA	CONTRACTOR
116	LAKE	14+27.89	1.35	RT	ENWAVE	BY OTHERS
117	LAKE	17+11.20	9.21	RT	ENWAVE	BY OTHERS
118	LAKE	17+28.81	9.61	RT	ENWAVE	BY OTHERS
119	LAKE	17+46.98	7.75	RT	ENWAVE	BY OTHERS
120	LAKE	17+90.30	12.24	LT	ENWAVE	BY OTHERS
121	LAKE	17+99.06	13.07	LT	ENWAVE	BY OTHERS
122	LAKE	18+43.99	0.86	RT	ENWAVE	BY OTHERS
123	LAKE	19+38.41	0.99	LT	ENWAVE	BY OTHERS
124	LAKE	19+41.76	1.97	LT	ENWAVE	BY OTHERS
125	LAKE	19+42.50	5.85	RT	ENWAVE	BY OTHERS
126	LAKE	20+14.88	4.78	RT	ENWAVE	BY OTHERS
127	LAKE	20+16.18	0.37	RT	ENWAVE	BY OTHERS
128	LAKE	20+17.46	6.57	RT	ENWAVE	BY OTHERS
129	LAKE	21+82.21	0.96	RT	ENWAVE	BY OTHERS
130	STATE	105+43.35	4.82	RT	ENWAVE	BY OTHERS
131	LAKE	15+09.35	9.67	LT	LGN	BY OTHERS
132	LAKE	18+91.76	10.59	LT	LUMEN	BY OTHERS
133	STATE	105+54.38	4.87	LT	LUMEN	BY OTHERS
134	LAKE	18+53.57	10.05	LT	MCI	BY OTHERS
135	LAKE	14+46.96	18.21	RT	PEOPLES GAS	BY OTHERS
136	LAKE	14+58.29	18.34	RT	PEOPLES GAS	BY OTHERS
137	LAKE	14+80.85	7.45	LT	PEOPLES GAS	BY OTHERS
138	LAKE	15+59.21	7.07	LT	PEOPLES GAS	BY OTHERS
139	LAKE	16+09.25	15.20	RT	PEOPLES GAS	BY OTHERS
140	LAKE	16+51.21	4.75	LT	PEOPLES GAS	BY OTHERS
141	LAKE	16+55.30	2.89	LT	PEOPLES GAS	BY OTHERS
142	LAKE	18+46.41	7.97	RT	PEOPLES GAS	BY OTHERS
143	STATE	102+15.51	4.32	LT	PEOPLES GAS	BY OTHERS
144	STATE	104+60.06	2.15	RT	PEOPLES GAS	BY OTHERS
145	STATE	104+67.16	2.76	RT	PEOPLES GAS	BY OTHERS
146	STATE	105+87.61	27.15	LT	PEOPLES GAS	BY OTHERS
147	LAKE	14+38.96	12.18	LT	RCN	BY OTHERS
148	LAKE	14+53.91	11.44	LT	RCN	BY OTHERS
149	LAKE	16+60.85	10.83	LT	RCN	BY OTHERS
150	LAKE	18+84.92	10.75	LT	RCN	BY OTHERS
151	LAKE	20+31.80	11.64	LT	RCN	BY OTHERS
152	STATE	105+54.01	4.87	RT	RCN	BY OTHERS
153	LAKE	14+60.71	9.00	LT	ZAYO	BY OTHERS

DESIGN BY:										
DRAWN BY:										
CHECKED BY:										
APPROVED BY:		4	7/3/2023	ISSUED FOR BID	AMK	AMK	ZMZ			
CDOT/APPROVED BY:		NO.	DATE	REVISIONS	DES.	DRW.	CHK.	DCCO	CDOT	

TRANSYSTEMS
222 SOUTH RIVERSIDE PLAZA SUITE 610
CHICAGO, ILLINOIS 60606

SKIDMORE, OWINGS & MERRILL LLP
224 SOUTH MICHIGAN AVENUE, SUITE 1000
CHICAGO, ILLINOIS 60604

MICHAEL J. LEY
062-055367
LICENSED PROFESSIONAL ENGINEER
ILLINOIS

CHICAGO DEPARTMENT OF TRANSPORTATION
DIVISION OF ENGINEERING

STATE / LAKE LOOP ELEVATED STATION
200 NORTH STATE STREET, CHICAGO, IL 60601

SPEC. NO.

DRAINAGE AND STRUCTURE ADJUSTMENT SCHEDULE

DRAWING NO. C-607

CDOT PROJECT D-1-209

DATE: 7/3/2023

REVISION NO.

NOTES

1. FOR EXISTING CONDITIONS AND UTILITIES SEE SHEET C-101.
2. CONTRACTOR TO PROTECT ALL EXISTING UTILITIES UNLESS OTHERWISE NOTED.
3. THE CONTRACTOR IS REQUIRED TO CONDUCT A PRE-ONSTRUCTION VIDEOTAPED INSPECTION PRIOR TO THE ISSUANCE OF A SEWER PERMIT AND A POST-CONSTRUCTION VIDEOTAPED INSPECTION PRIOR TO ACCEPTANCE OF THE SEWER. THE VIDEOTAPE MUST BE SUBMITTED TO THE SEWER UNIT OF THE DWM FOR REVIEW AND APPROVAL. SHOULD RECONSTRUCTION TELEVISING INDICATE CONDITIONAL ISSUES WITH THE SEWER, IT SHALL BE REPLACED OR REHABILITATED PRIOR TO CONSTRUCTION AS PART OF THE PROJECT IMPROVEMENT.
4. IN AREAS WHERE STREET IS TO BE RECONSTRUCTED (FULL DEPTH PAVEMENT REMOVAL AND REPLACEMENT), ALL BRICK CATCH BASINS AND GUTTER BOXES ARE TO BE REPLACED, IRRESPECTIVE OF THEIR CONDITION, WITH NEW DWM STANDARD CATCH BASINS OR INLETS. THE ONLY EXCEPTIONS ARE CONCRETE OR LINED CATCH BASINS THAT ARE IN GOOD CONDITION, WHICH SHOULD BE CALLED OUT AS SUCH ON PLANS.

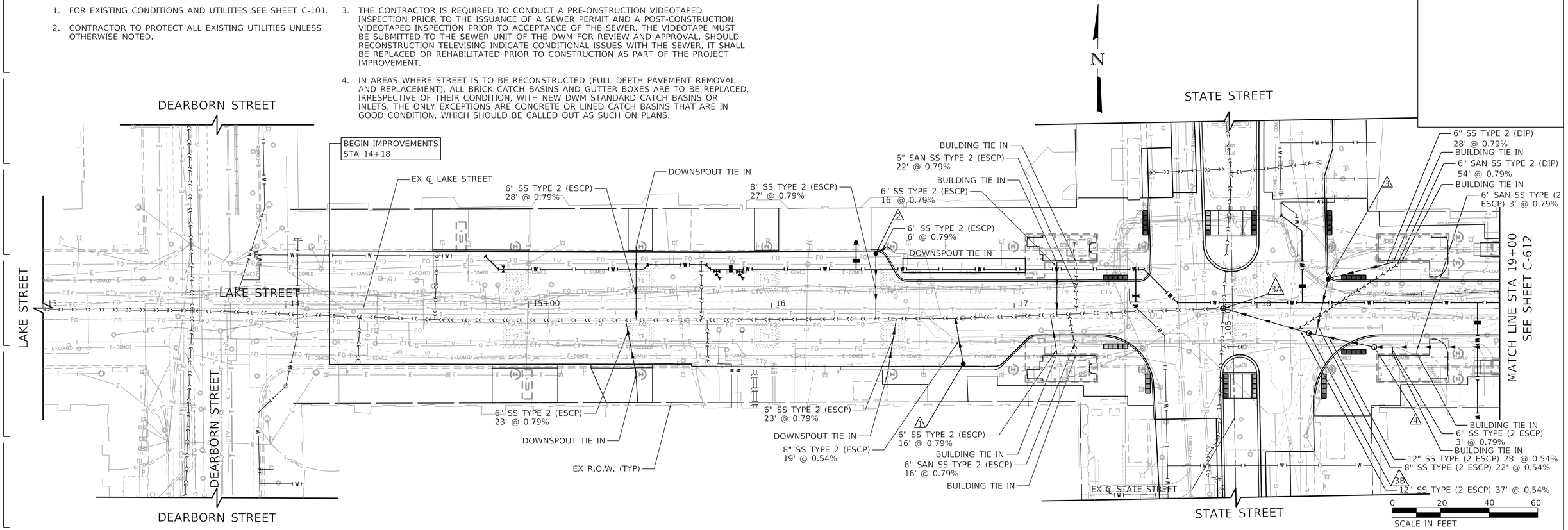

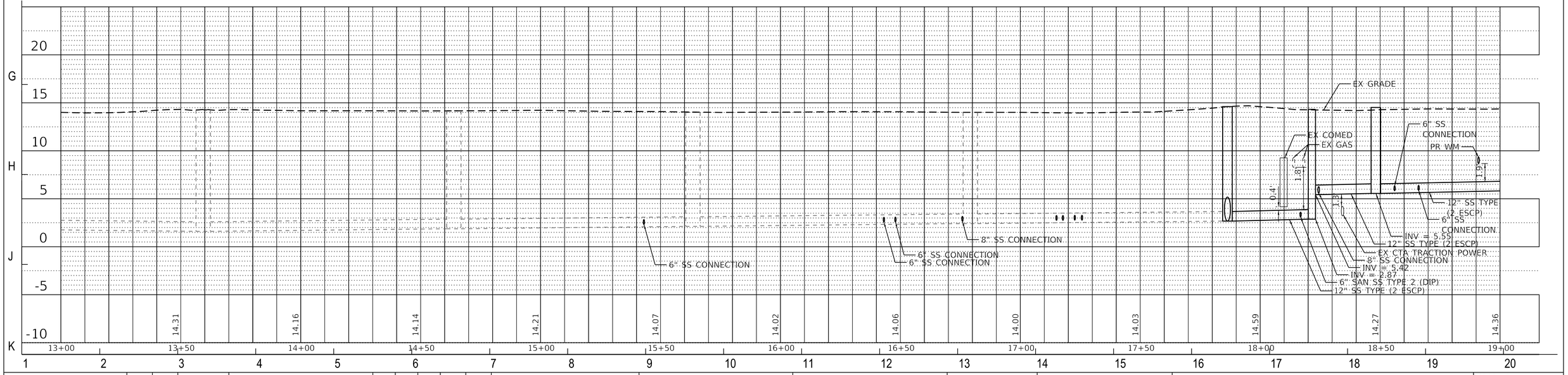

DESIGN BY:									
DRAWN BY:									
CHECKED BY:									
APPROVED BY:		4	7/3/2023	ISSUED FOR BID	BHH	BHH	MJL		
CDOT/APPROVED BY:		NO.	DATE	REVISIONS	DES.	DRW.	CHK.	DCCO	CDOT

TRANSYSTEMS
222 SOUTH RIVERSIDE PLAZA SUITE 610
CHICAGO, ILLINOIS 60606

SOM
SKIDMORE, OWINGS & MERRILL LLP
224 SOUTH MICHIGAN AVENUE, SUITE 1000
CHICAGO, ILLINOIS 60604

MICHAEL J. LEVI
062-055367
LICENSED PROFESSIONAL ENGINEER
ILLINOIS

CDOT
CHICAGO DEPARTMENT OF TRANSPORTATION
DIVISION OF ENGINEERING

STATE / LAKE LOOP ELEVATED STATION
200 NORTH STATE STREET, CHICAGO, IL 60601

SPEC. NO.

PROPOSED DRAINAGE
LAKE STREET

DRAWING NO.
C-611

CDOT PROJECT D-1-209

DATE: 7/3/2023

REVISION NO.

NOTES

1. FOR EXISTING CONDITIONS AND UTILITIES SEE SHEET C-101.
2. CONTRACTOR TO PROTECT ALL EXISTING UTILITIES UNLESS OTHERWISE NOTED.
3. THE CONTRACTOR IS REQUIRED TO CONDUCT A PRE-ONSTRUCTION VIDEOTAPED INSPECTION PRIOR TO THE ISSUANCE OF A SEWER PERMIT AND A POST-CONSTRUCTION VIDEOTAPED INSPECTION PRIOR TO ACCEPTANCE OF THE SEWER. THE VIDEOTAPE MUST BE SUBMITTED TO THE SEWER UNIT OF THE DWM FOR REVIEW AND APPROVAL. SHOULD RECONSTRUCTION TELEVISING INDICATE CONDITIONAL ISSUES WITH THE SEWER, IT SHALL BE REPLACED OR REHABILITATED PRIOR TO CONSTRUCTION AS PART OF THE PROJECT IMPROVEMENT.
4. IN AREAS WHERE STREET IS TO BE RECONSTRUCTED (FULL DEPTH PAVEMENT REMOVAL AND REPLACEMENT), ALL BRICK CATCH BASINS AND GUTTER BOXES ARE TO BE REPLACED, IRRESPECTIVE OF THEIR CONDITION, WITH NEW DWM STANDARD CATCH BASINS OR INLETS. THE ONLY EXCEPTIONS ARE CONCRETE OR LINED CATCH BASINS THAT ARE IN GOOD CONDITION, WHICH SHOULD BE CALLED OUT AS SUCH ON PLANS.

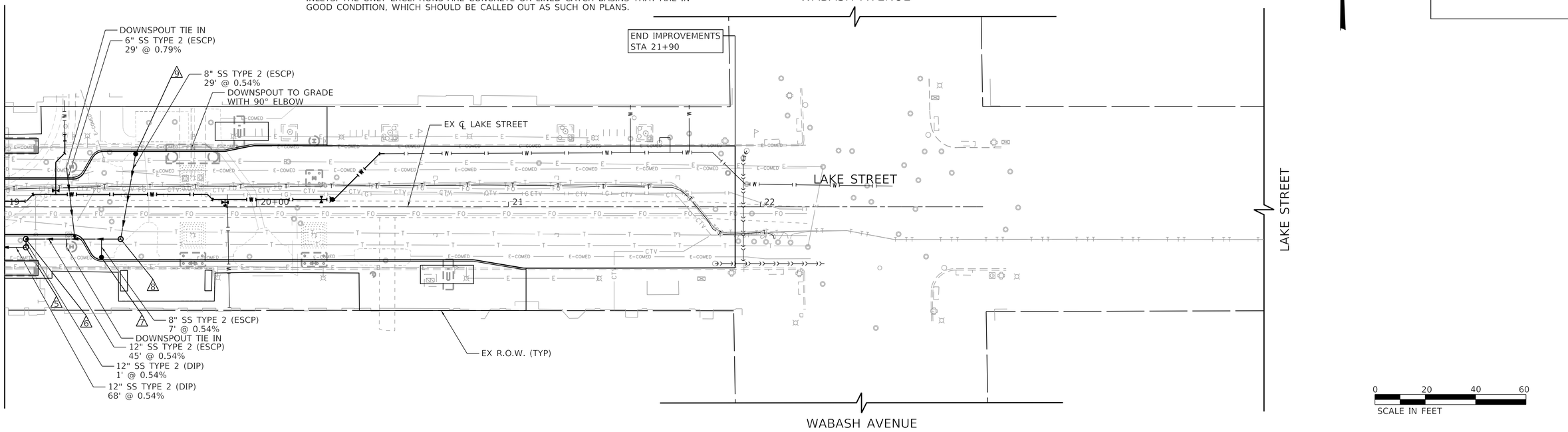

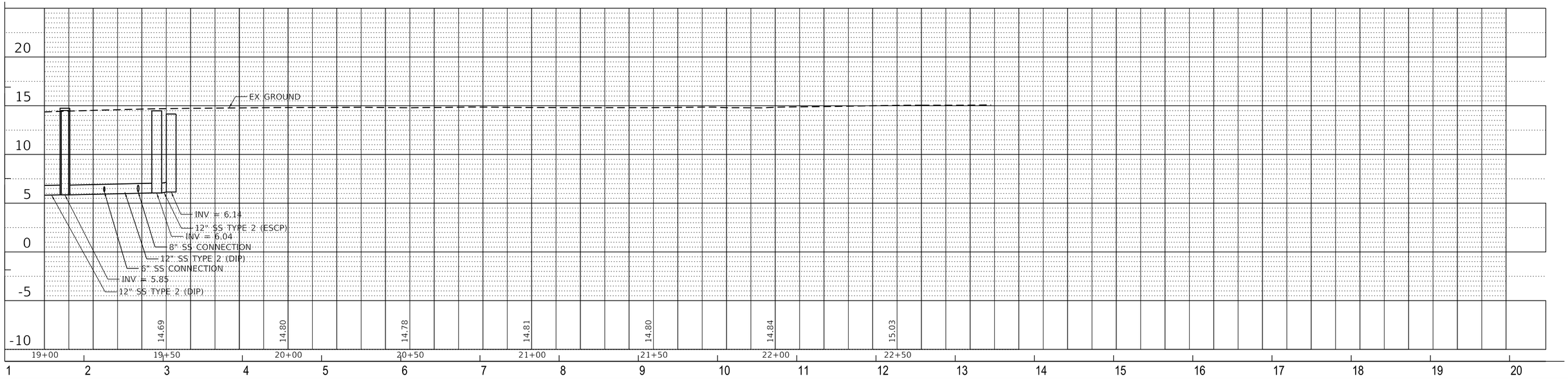

DESIGN BY:										
DRAWN BY:										
CHECKED BY:										
APPROVED BY:		4	7/3/2023	ISSUED FOR BID	BHH	BHH	MJL			
CDOT/APPROVED BY:		NO.	DATE	REVISIONS	DES.	DRW.	CHK.	DCCO	CDOT	

TRANSYSTEMS
222 SOUTH RIVERSIDE PLAZA SUITE 610
CHICAGO, ILLINOIS 60606

SKIDMORE, OWINGS & MERRILL LLP
224 SOUTH MICHIGAN AVENUE, SUITE 1000
CHICAGO, ILLINOIS 60604

MICHAEL J. LEVI
062-055367
LICENSED PROFESSIONAL ENGINEER
ILLINOIS

CHICAGO DEPARTMENT OF TRANSPORTATION
DIVISION OF ENGINEERING

STATE / LAKE LOOP ELEVATED STATION
200 NORTH STATE STREET, CHICAGO, IL 60601

PROPOSED DRAINAGE
LAKE STREET

CDOT PROJECT D-1-209

DATE: 7/3/2023

SPEC. NO.

DRAWING NO.
C-612

REVISION NO.

NOTES

1. FOR EXISTING CONDITIONS AND UTILITIES SEE SHEET C-101.
2. CONTRACTOR TO PROTECT ALL EXISTING UTILITIES UNLESS OTHERWISE NOTED.
3. CONTRACTOR TO TEMPORARILY SUSPEND AND SUPPORT STORM SEWER DURING MEZZANINE CONSTRUCTION TO MAINTAIN FLOW IN SEWER (SEE TEMPORARY SOIL RETENTION SYSTEM PLANS).
4. THE CONTRACTOR IS REQUIRED TO CONDUCT A PRE-ONSTRUCTION VIDEOTAPED INSPECTION PRIOR TO THE ISSUANCE OF A SEWER PERMIT AND A POST-CONSTRUCTION VIDEOTAPED INSPECTION PRIOR TO ACCEPTANCE OF THE SEWER. THE VIDEOTAPE MUST BE SUBMITTED TO THE SEWER UNIT OF THE DWM FOR REVIEW AND APPROVAL. SHOULD RECONSTRUCTION TELEVISING INDICATE CONDITIONAL ISSUES WITH THE SEWER, IT SHALL BE REPLACED OR REHABILITATED PRIOR TO CONSTRUCTION AS PART OF THE PROJECT IMPROVEMENT.
5. IN AREAS WHERE STREET IS TO BE RECONSTRUCTED (FULL DEPTH PAVEMENT REMOVAL AND REPLACEMENT), ALL BRICK CATCH BASINS AND GUTTER BOXES ARE TO BE REPLACED, IRRESPECTIVE OF THEIR CONDITION, WITH NEW DWM STANDARD CATCH BASINS OR INLETS. THE ONLY EXCEPTIONS ARE CONCRETE OR LINED CATCH BASINS THAT ARE IN GOOD CONDITION, WHICH SHOULD BE CALLED OUT AS SUCH ON PLANS.
6. EARLY INSTALLATION OF THIS SEWER IS REQUIRED TO ENABLE COMED TEMPORARY RELOCATION OF THE DUCT PACKAGE ON THE WEST SIDE OF STATE ST OUT OF CONFLICT WITH THE TEMPORARY SOIL RETENTION SYSTEM FOR SUBWAY CONSTRUCTION.

0 20 40 60
SCALE IN FEET

N

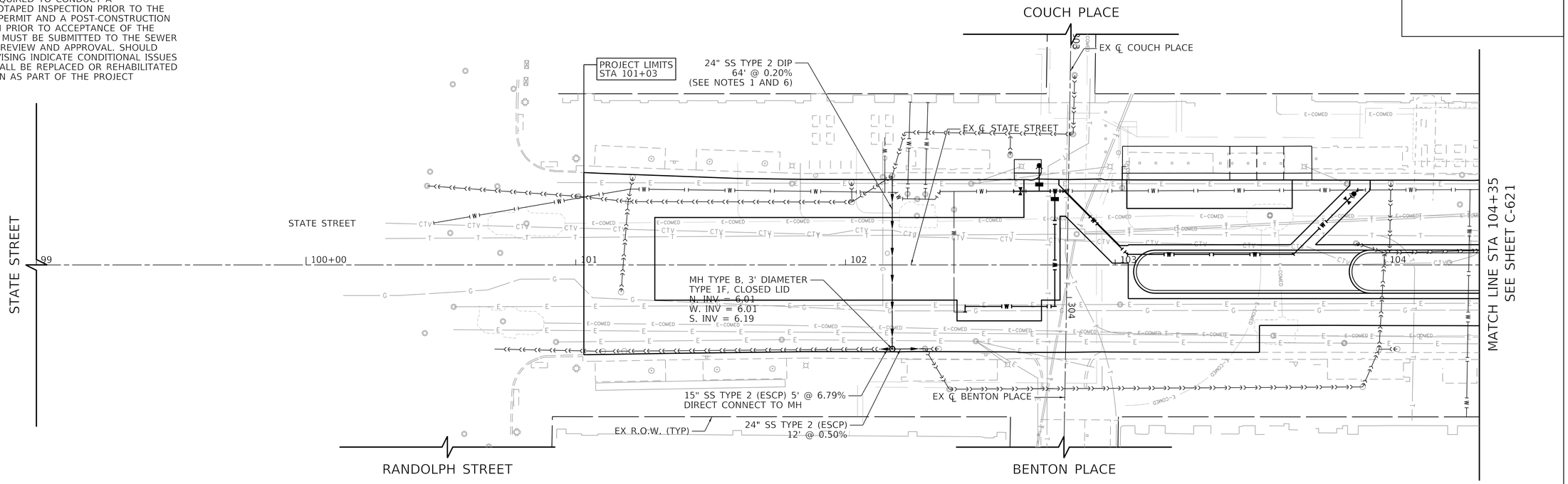

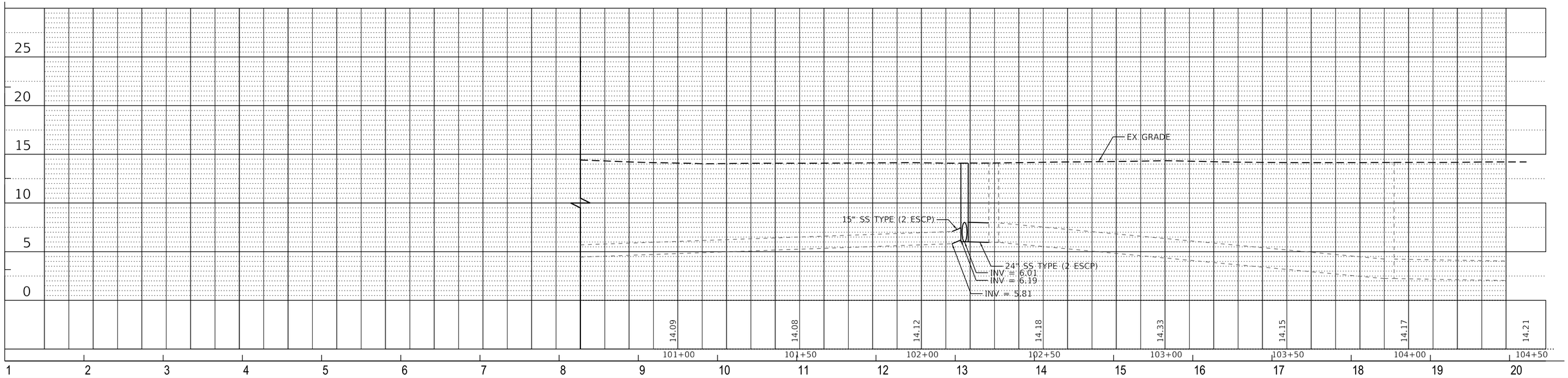

DESIGN BY:										
DRAWN BY:										
CHECKED BY:										
APPROVED BY:		4	7/3/2023	ISSUED FOR BID	BHH	BHH	MJL			
CDOT/APPROVED BY:		NO.	DATE	REVISIONS	DES.	DRW.	CHK.	DCCO	CDOT	

TRANSYSTEMS
222 SOUTH RIVERSIDE PLAZA SUITE 610
CHICAGO, ILLINOIS 60606

SKIDMORE, OWINGS & MERRILL LLP
224 SOUTH MICHIGAN AVENUE, SUITE 1000
CHICAGO, ILLINOIS 60604

MICHAEL J. LEVI
062-055367
LICENSED PROFESSIONAL ENGINEER
ILLINOIS

CHICAGO DEPARTMENT OF TRANSPORTATION
DIVISION OF ENGINEERING

STATE / LAKE LOOP ELEVATED STATION
200 NORTH STATE STREET, CHICAGO, IL 60601

PROPOSED DRAINAGE
STATE STREET

CDOT PROJECT D-1-209

DATE: 7/3/2023

SPEC. NO.

DRAWING NO.
C-613

REVISION NO.

1 WORK TO BE DONE BY CONTRACTOR
SET: 1-16" MJ RESILIENT WEDGE VALVE AT STA. 14+90, 16.0' LT

2 WORK TO BE DONE BY CONTRACTOR
SET: 1-16" x 1/8 2BRJ BEND AT STA. 15+47, 16.0' LT

3 WORK TO BE DONE BY CONTRACTOR
SET: 1-16" x 1/8 2BRJ BEND AT STA. 15+49, 17.8' LT

4 WORK TO BE DONE BY CONTRACTOR
SET: 1-16" x 1/8 2BMJ BEND AT STA. 15+73, 17.8' LT

5 WORK TO BE DONE BY CONTRACTOR
SET: 1-16" x 1/8 2BMJ BEND AT STA. 15+75, 16.0' LT

6 WORK TO BE DONE BY CONTRACTOR
SET: 1-16"x12" 3BMJ TEE AT STA. 15+77, 16.0' LT
SET: 1-12" MJ RESILIENT WEDGE VALVE AT STA. 15+77, 15.1' LT

7 WORK TO BE DONE BY CONTRACTOR
SET: 1-16" BMJ GATE VALVE IN BASIN AT STA. 15+83, 16.0' LT

8 WORK TO BE DONE BY CONTRACTOR
SET: 1-16"x12" 3BMJ TEE AT STA. 15+87, 16.0' LT
SET: 1-12" MJ RESILIENT WEDGE VALVE AT STA. 15+87, 16.0' LT

9 WORK TO BE DONE BY CONTRACTOR
SET: 1-16"x6" 3BMJ TEE AT STA. 16+35, 16.0' LT
2-16" MEGALUGS
1-6" MJ CONTROL VALVE AT STA. STA. 16+35, 19.5' LT
WORK TO BE DONE BY CONTRACTOR
SET: 1-6" FIRE HYDRANT TO STA. 16+35, 27.0' LT

10 WORK TO BE DONE BY CDWM
SET: 1-16"x16" 3BMJ TEE AT STA. 17+50, 16.0' LT

11 WORK TO BE DONE BY CONTRACTOR
SET: 1-16" x 1/8 2BMJ BEND AT STA. 17+53, 16.0' LT

12 WORK TO BE DONE BY CONTRACTOR
SET: 1-16" x 1/8 2BMJ BEND AT STA. 17+67, 2.2' LT

13 WORK TO BE DONE BY CONTRACTOR
SET: 1-16"x12" 3BRJ TEE AT STA. 18+19, 2.2' LT
SET: 1-12" BMJ GATE VALVE IN BASIN AT STA. 18+19. 9.1' LT

14 WORK TO BE DONE BY CONTRACTOR
SET: 1-16"x12" 3BMJ
TEE AT STA. 18+91, 2.2' LT
SET: 1-12" BMJ GATE VALVE IN BASIN AT STA. 18+91, 6.2' LT
CHLORINATE THE NEW WM
AFTER APPROVAL TRANSFER SERVICES

24 WORK TO BE DONE BY CONTRACTOR
SET: 1-16" MJ RESILIENT WEDGE VALVE AT STA. 17+50, 5.0' LT

26 WORK TO BE DONE BY CDWM
AFTER THE NEW WM IS PRESSURE TESTED, CUT, CAP AND BRACE THE EXISTING 16" WATER MAIN TO THE NORTH AND CONNECT NEW ONE TO THE SOUTH AT STA. 17+50, 0.3' LT
CHLORINATE THE NEW WM
AFTER APPROVAL TRANSFER SERVICES

28 WORK TO BE DONE BY CONTRACTOR
AT STA. 15+88, 12.0' LT
CUT, CAP AND BRACE THE EXISTING 12" WATER MAIN TO THE NORTH AND CONNECT NEW ONE TO THE SOUTH

35 WORK TO BE DONE BY CDWM
CUT, CAP AND BRACE THE EXISTING 12" WATER MAIN TO THE NORTH AT STA. 18+9, 43.3' LT
SET: 1-12" TRANSITION SLEEVE
5' OF 12" DIWP

36 WORK TO BE DONE BY CDWM
SET: 1-12" x 1/8 2BMJ BEND AT STA. 18+9, 38.3' LT

37 WORK TO BE DONE BY CDWM
SET: 1-12" x 1/8 2BMJ BEND AT STA. 18+18, 31.8' LT

25 CONNECTION AND ADDITIONAL WATER MAIN BY CDWM. CONTRACTOR TO COORDINATE WITH CDWM.
CUT, CAP AND BRACE THE EXISTING 16" WATER MAIN TO THE EAST.
FLUSH AND PRESSURE TEST THE NEW WATER MAIN
SET: 1-16" x 1/8 2BRJ BEND AT STA. 14+88, 16.0' LT
SET: 1-16" x 1/8 2BRJ BEND AT STA. 14+82, 21.4' LT

23 N/A

27 WORK TO BE DONE BY CONTRACTOR
AT STA. 15+79, 11.5' LT
CUT, CAP AND BRACE THE EXISTING 12" WATER MAIN TO THE NORTH AND CONNECT NEW ONE TO THE SOUTH

DEARBORN STREET
STATE STREET
LAKE STREET
EX ℄ LAKE STREET
EX ℄ STATE STREET
BEGIN IMPROVEMENTS STA 14+18
MATCH LINE STA 19+00 SEE SHEET C-622
MATCH LINE STA 104+35 SEE SHEET C-623
SEE PLUMBING PLANS (SHEET P-134) FOR CONNECTION DETAILS
SCALE IN FEET 0 20 40 60

NOTES

1. FOR EXISTING CONDITIONS AND UTILITIES SEE SHEET C-101.
2. CONTRACTOR TO PROTECT ALL EXISTING UTILITIES UNLESS OTHERWISE NOTED.
3. CDWM TO CONTACT THE BUREAU OF WATER QUALITY AT (312) 744-8190 PRIOR TO CONNECTION TO THE EXISTING WATER SYSTEM SO THEY CAN SWAB ALL CONNECTION FITTINGS AND PIPE WITH CHLORINE SOLUTION PRIOR TO CONNECTIONS.
4. CHLORINATION AND TESTING OF PIPING SWAB ALL PIPE AND FITTINGS WITH CHLORINE SOLUTION THAT WILL NOT BE CHLORINATED AND FLUSH PER WATER QUALITY (312) 744-8190. VISUALLY INSPECT AT OPERATING PRESSURE PRIOR TO BACKFILLING.
5. RESTRAINED JOINT PIPE MUST BE INSTALLED 30 FEET FROM CONNECTIONS, VALVES, AND FITTINGS NOTED AS RJ.

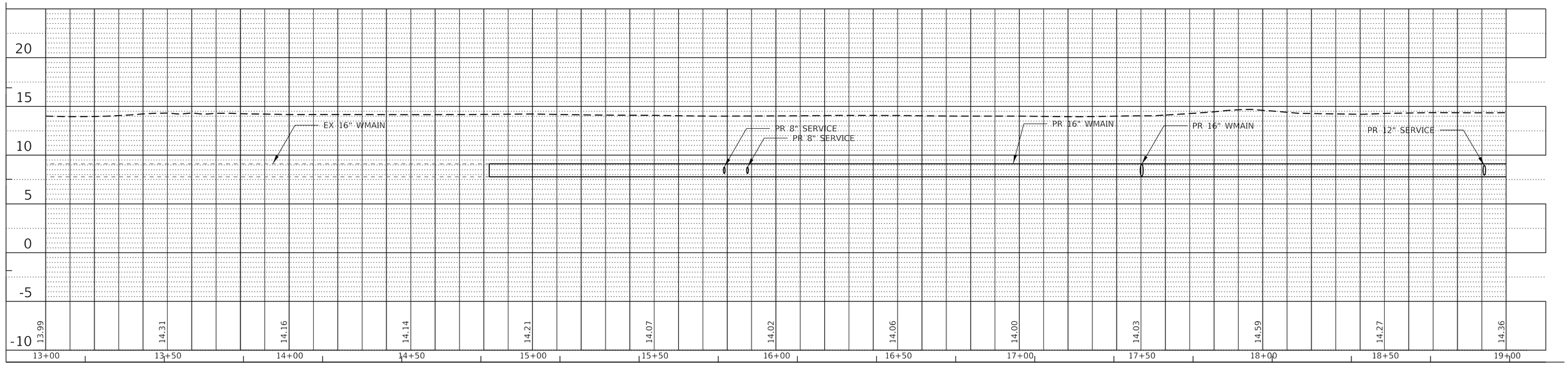

DESIGN BY:										
DRAWN BY:										
CHECKED BY:										
APPROVED BY:		4	7/3/2023	ISSUED FOR BID	BHH	BHH	MJL			
CDOT/APPROVED BY:		NO.	DATE	REVISIONS	DES.	DRW.	CHK.	DCCO	CDOT	

TRANSYSTEMS
222 SOUTH RIVERSIDE PLAZA SUITE 610
CHICAGO, ILLINOIS 60606

SKIDMORE, OWINGS & MERRILL LLP
224 SOUTH MICHIGAN AVENUE, SUITE 1000
CHICAGO, ILLINOIS 60604

MICHAEL J. LEV 062-055367 LICENSED PROFESSIONAL ENGINEER ILLINOIS

CHICAGO DEPARTMENT OF TRANSPORTATION
DIVISION OF ENGINEERING

STATE / LAKE LOOP ELEVATED STATION
200 NORTH STATE STREET, CHICAGO, IL 60601

PROPOSED WATER MAIN
LAKE STREET

CDOT PROJECT D-1-209 | DATE: 7/3/2023

SPEC. NO.

DRAWING NO. C-621

REVISION NO.

15 WORK TO BE DONE BY CONTRACTOR
SET: 1-16" x 1/8 2BMJ BEND AT STA. 19+09, 2.2' LT

16 WORK TO BE DONE BY CONTRACTOR
SET: 1-16" x 1/8 2BMJ BEND AT STA. 19+11, 4.9' LT

17 WORK TO BE DONE BY CONTRACTOR
SET: 1-16"x8" 3BMJ TEE AT STA. 19+20, 4.9' LT
SET: 1-8" MJ RESILIENT WEDGE VALVE
AT STA. 19+20. 6.4' LT

18 WORK TO BE DONE BY CONTRACTOR
SET: 1-16" x 1/8 2BMJ BEND AT
STA. 19+81, 4.9' LT

19 WORK TO BE DONE BY CONTRACTOR
SET: 1-16" x 1/8 2BMJ BEND AT STA. 19+83, 2.9' LT

20 WORK TO BE DONE BY CONTRACTOR
SET: 1-16"x6" 3BMJ TEE AT STA. 19+87, 2.9' LT
SET: 1-6" MJ RESILIENT WEDGE VALVE
AT STA. 19+87. 1.8' LT

21 WORK TO BE DONE BY CONTRACTOR
SET: 1-16" MJ RESILIENT WEDGE VALVE
AT STA. 20+26, 2.9' LT

22 TEMPORARY HYDRANT FOR FLUSHING,
PRESSURE TEST AND CHLORINATION
AT STA. 20+30, 2.9 LT

29 WORK TO BE DONE BY CONTRACTOR
SET: 1-8" x 1/8 2BMJ BEND AT STA. 19+24, 21.3' LT

30 WORK TO BE DONE BY CONTRACTOR
CONNECT TO EX. VALVE BASIN AT STA. 19+24, 28.7' LT
CUT, CAP AND BRACE THE EXISTING 8" WATER SERVICE
TO THE SOUTH AND CONNECT NEW ONE TO THE NORTH

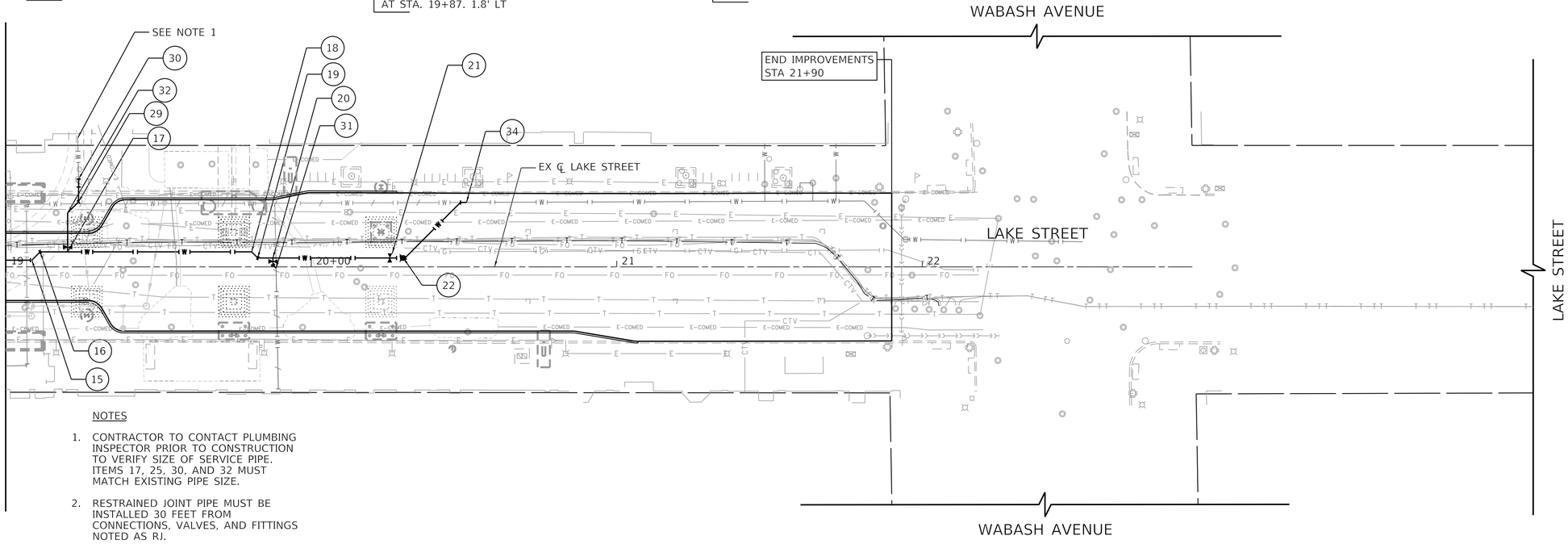

NOTES

1. CONTRACTOR TO CONTACT PLUMBING INSPECTOR PRIOR TO CONSTRUCTION TO VERIFY SIZE OF SERVICE PIPE. ITEMS 17, 25, 30, AND 32 MUST MATCH EXISTING PIPE SIZE.

2. RESTRAINED JOINT PIPE MUST BE INSTALLED 30 FEET FROM CONNECTIONS, VALVES, AND FITTINGS NOTED AS RJ.

N

31 WORK TO BE DONE BY CONTRACTOR
SET: 1-8" MJ RESILIENT WEDGE VALVE
VALVE AT STA. 19+89, 7.0' LT
WORK TO BE DONE BY CDWM
CUT, CAP AND BRACE THE EXISTING 8"
WATER SERVICE TO THE NORTH AND
CONNECT NEW ONE TO THE SOUTH

32 WORK TO BE DONE BY CONTRACTOR
SET: 1-8" x 1/8 2BMJ BEND AT STA. 19+20,
17.7' LT
INSTALL BEFORE OR WITH NOTES 25 AND 30

33 N/A

34 WORK TO BE DONE BY CDWM
CUT, CAP AND BRACE THE EXISTING 16"
WATER MAIN TO THE WEST AT 20+49, 21.1'
LT AND CONNECT TO THE EAST
SET: 1-16" TRANSITION SLEEVE
5' OF 16" DIWP
SET: 1-16" x 1/8 2BRJ BEND AT STA. 20+49,
21.1' LT
SET: 1-16" x 1/8 2BMJ BEND AT STA. 20+31,
2.9' LT
INSTALL AS PART OF THE EXISTING FEEDER
MAIN AFTER ALL WATER SERVICES ARE
TRANSFERRED

0 20 40 60
SCALE IN FEET

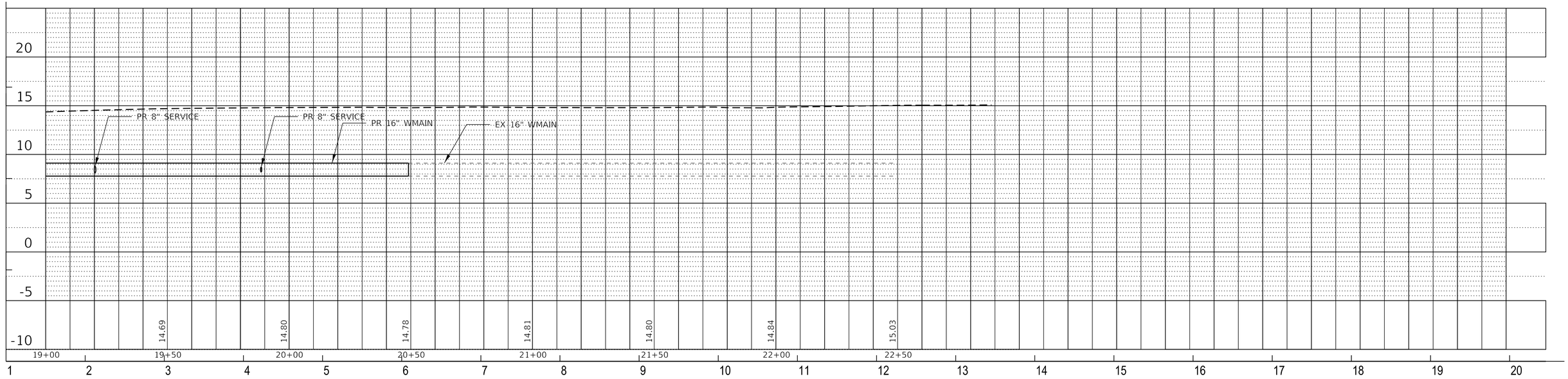

DESIGN BY:										
DRAWN BY:										
CHECKED BY:										
APPROVED BY:		4	7/3/2023	ISSUED FOR BID	BHH	BHH	MJL			
CDOT/APPROVED BY:		NO.	DATE	REVISIONS	DES.	DRW.	CHK.	DCCO	CDOT	

TRANSYSTEMS
222 SOUTH RIVERSIDE PLAZA SUITE 610
CHICAGO, ILLINOIS 60606

SKIDMORE, OWINGS & MERRILL LLP
224 SOUTH MICHIGAN AVENUE, SUITE 1000
CHICAGO, ILLINOIS 60604

MICHAEL J. LEVI
062-055367
LICENSED PROFESSIONAL ENGINEER
ILLINOIS

CHICAGO DEPARTMENT OF TRANSPORTATION
DIVISION OF ENGINEERING

STATE / LAKE LOOP ELEVATED STATION
200 NORTH STATE STREET, CHICAGO, IL 60601

PROPOSED WATER MAIN
LAKE STREET

CDOT PROJECT D-1-209

DATE: 7/3/2023

SPEC. NO.

DRAWING NO.
C-622

REVISION NO.

(A) WORK TO BE DONE BY CONTRACTOR
SET: 1-16" MJ RESILIENT WEDGE VALVE
AT STA. 103+86, 23.9' LT

(B) WORK TO BE DONE BY CONTRACTOR
SET: 1-16" x 1/8 2BRJ BEND AT STA. 103+66, 3.9' LT

(C) WORK TO BE DONE BY CONTRACTOR
SET: 1-16" x 1/8 2BMJ BEND AT STA. 103+05, 3.9' LT

(D) WORK TO BE DONE BY CONTRACTOR
SET: 1-16" MJ RESILIENT WEDGE VALVE
AT STA. 102+64, 27.3' LT

(E) TEMPORARY HYDRANT FOR FLUSHING, PRESSURE TEST
AND CHLORINATION AT STA. 103+89, 26.4' LT

NOTES

1. RESTRAINED JOINT PIPE MUST BE INSTALLED 30 FEET FROM CONNECTIONS, VALVES, AND FITTINGS NOTED AS RJ.

(F) WORK TO BE DONE BY CONTRACTOR
SET: 1-16" x 1/8 2BRJ BEND AT STA. 102+81, 27.4' LT

(G) WORK TO BE DONE BY CONTRACTOR
SET: 1-16"x4" 3BMJ TEE AT STA. 103+06, 3.9' LT
SET: 1-4" BMJ GATE VALVE IN BASIN
AT STA. 103+06, 8.2' RT

(H) WORK TO BE DONE BY CONTRACTOR
SET: 1-16"x8" 3BMJ TEE AT STA. 102+73, 27.4' LT
2-16" MEGALUGS
1-8" MJ CONTROL VALVE AT STA. STA. 102+73, 32.9' LT
WORK TO BE DONE BY CDWM
SET: 1-8" FIRE HYDRANT TO STA. 102+68, 36.9' LT

(I) WORK TO BE DONE BY CDWM
CUT, CAP AND BRACE THE EXISTING 16" WATER
MAIN TO THE NORTH AT STA. 102+62, 27.3' LT AND
CONNECT TO THE WEST
SET: 1-16" TRANSITION SLEEVE
5' OF 16" DIWP
CLOSE THE VALVES AND RE-ENERGIZE THE MAIN OUTSIDE OF THE PROJECT LIMITS. THESE VALVE WILL REMAIN CLOSED UNTIL THE NEW WATER MAIN IS APPROVED.
WORK TO BE DONE BY CDWM FORCES
CONNECT THE NEW 16" WATER MAIN TO THE EXISTING 16" WATER MAIN
FLUSH, PRESSURE TEST AND CHLORINATE THE NEW WATER MAIN. AFTER APPROVAL, TRANSFER THE SERVICE TO THE NEW WATER MAIN.

(J) WORK TO BE DONE BY CONTRACTOR
SET: 1-4" x 1/4 2BMJ BEND AT STA. 102+78, 15.4' RT

(K) WORK TO BE DONE BY CONTRACTOR
TIE IN PROPOSED WATER SERVICE TO STRUCTURE
AT 102+44, 17.5' RT
SET: 1-4" x 1/4 2BMJ BEND AT STA. 102+44, 15.4' RT

(L) WORK TO BE DONE BY CDWM
CONNECT TO EXIST WATER MAIN
CUT, CAP AND BRACE THE EXISTING 16" WATER
MAIN TO THE EAST AT STA. 103+90, 27.8' LT
SET: 1-16" TRANSITION SLEEVE
5' OF 16" DIWP
SET: 1-16" x 1/8 2BRJ BEND AT STA. 103+90, 27.8' LT

(M) WORK TO BE DONE BY CONTRACTOR
SET: 1-4" x 1/4 2BRJ BEND AT STA. 103+06, 15.4' RT

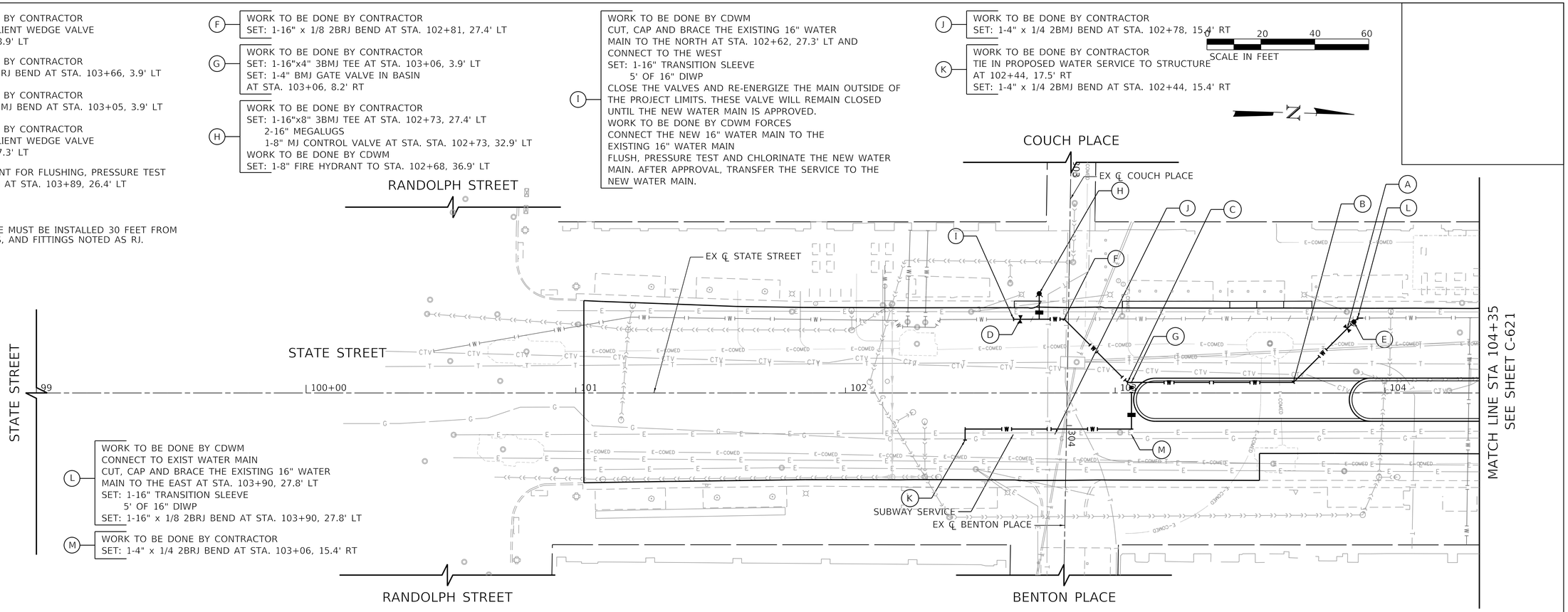

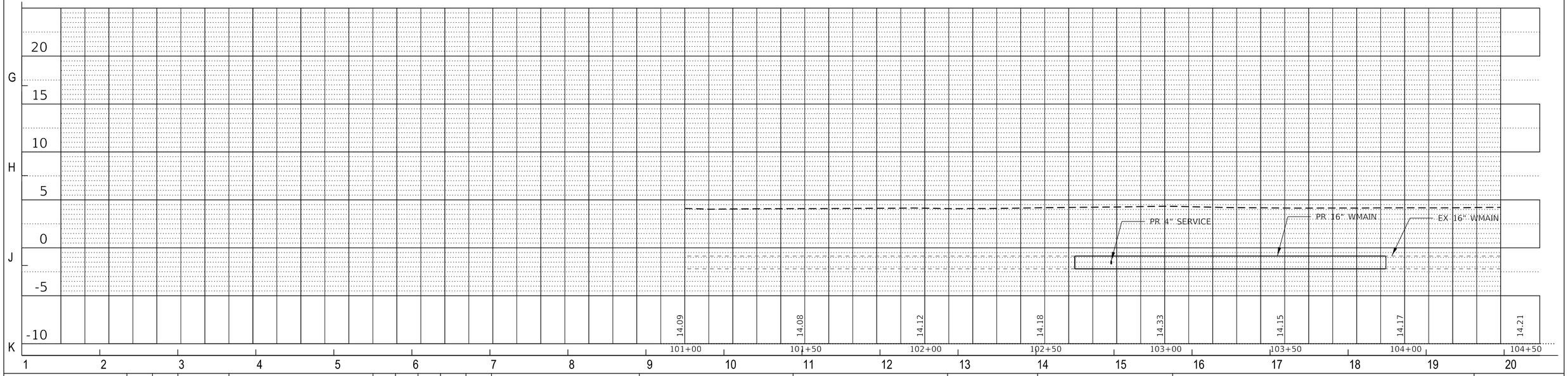

DESIGN BY:										
DRAWN BY:										
CHECKED BY:										
APPROVED BY:		4	7/3/2023	ISSUED FOR BID	BHH	BHH	MJL			
CDOT/APPROVED BY:		NO.	DATE	REVISIONS	DES.	DRW.	CHK.	DCCO	CDOT	

TRANSYSTEMS
222 SOUTH RIVERSIDE PLAZA SUITE 610
CHICAGO, ILLINOIS 60606

SKIDMORE, OWINGS & MERRILL LLP
224 SOUTH MICHIGAN AVENUE, SUITE 1000
CHICAGO, ILLINOIS 60604

MICHAEL J. LEVI
062-055367
LICENSED PROFESSIONAL ENGINEER
ILLINOIS

CHICAGO DEPARTMENT OF TRANSPORTATION
DIVISION OF ENGINEERING

STATE / LAKE LOOP ELEVATED STATION

SPEC. NO.

PROPOSED WATER MAIN
STATE STREET

DRAWING NO.
C-623

CDOT PROJECT D-1-209

DATE: 7/3/2023

REVISION NO.

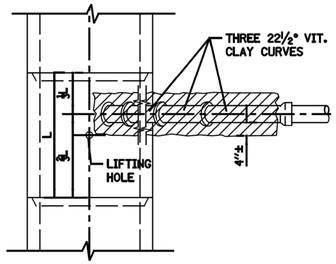

PLAN

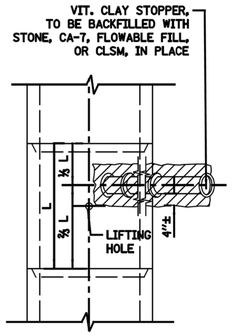

PLAN

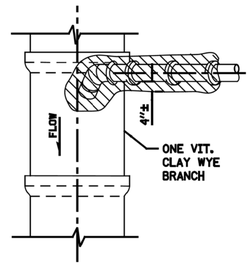

PLAN

NOTE:
PLUG TO BE COATED WITH MORTAR AND DRIVEN INTO PLACE WITH A WOODEN MALLET AND THEN SEALED WITH MORTAR.

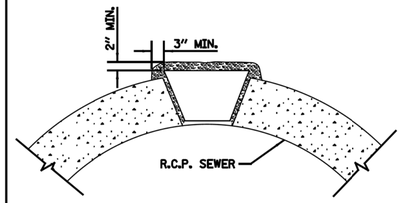

LIFTING HOLE PLUG DETAIL FOR CONCRETE PIPE

NOTE:
1. ALL PLUG MATERIALS MUST COMPLY WITH 1042.16 OF THE IDOT SSRBC.

2. LIFT HOLES ON COMBINED SEWERS ARE PROHIBITED WHEN THE WATER TABLE IS WITHIN 2 FEET OF THE PIPE INVERT.

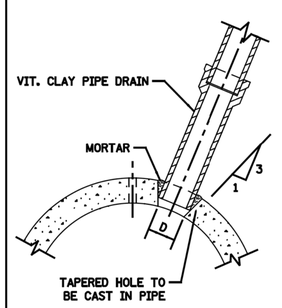

SIZE OF DRAIN	"D"
6"	6⅞"
8"	9⅛"
10"	11⅛"
12"	13½"
15"	17"
18"	20¼"
21"	23⅞"

DETAIL OF TAPERED HOLE

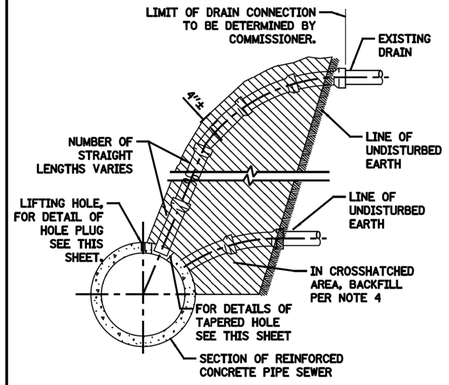

ELEVATION

TYPICAL DRAIN CONNECTIONS FOR EXISTING DRAINS

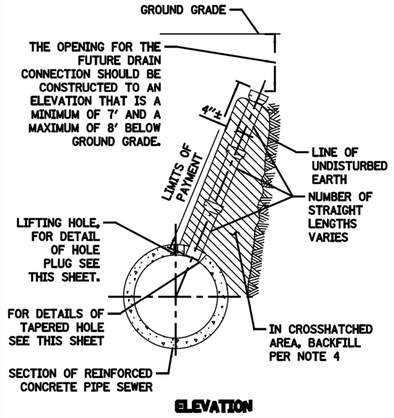

ELEVATION

TYPICAL DRAIN STACKS FOR FUTURE USE

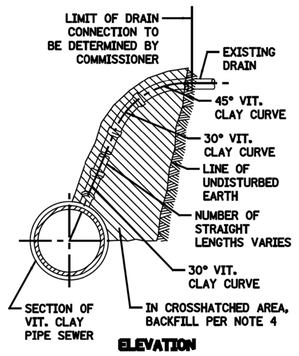

ELEVATION

TYPICAL DRAIN CONNECTIONS FOR EXISTING DRAINS

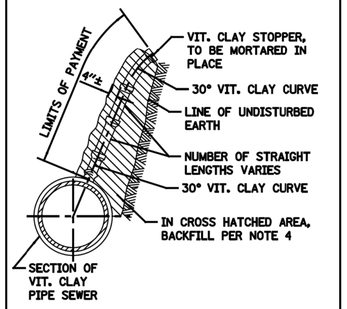

ELEVATION

TYPICAL DRAIN STACKS FOR FUTURE USE

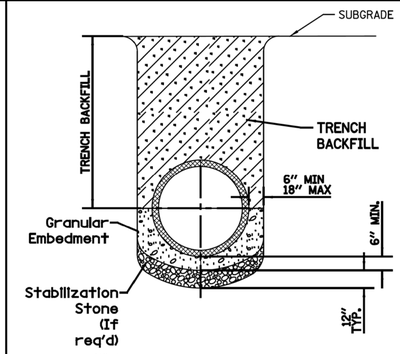

NOTE:
1. FOR TRENCH BACKFILL, REFER TO IDOT SSRBC, ARTICLE 1003.04.

2. FOR GRANULAR EMBEDMENT, USE CA-11, CRUSHED GRAVEL, CRUSHED STONE, OR CRUSHED CONCRETE.

3. FOR STABILIZATION STONE, 12" OF CA-1 STONE IS ONLY REQUIRED WHEN UNSTABLE MATERIAL IS ENCOUNTERED AT TRENCH BOTTOM.

4. AGGREGATE PLACED FOR TEMPORARY SURFACE RESTORATION WILL NOT BE PAID SEPARATELY AND SHALL BE INCIDENTAL TO THE CONTRACT.

SEWER TRENCH DETAIL

NOTES:

1. ALL DRAIN CONNECTION JOINTS MUST BE MADE AS SPECIFIED IN SPECIFICATIONS..
2. FOR DUCTILE IRON PIPE DRAIN CONNECTIONS SEE SHEET NO. A.2.
3. FOR BACKFILL OF HATCHED SUPPORT AREAS, USE CONCRETE. CA-11, FLOWABLE FILL, OR CLSM.

$FILE$
$DATE$

STANDARD REVISIONS	
DATE	DESCRIPTION
7/3/18	APPROVED PLAN

PERCENT COMPLETE	DATE
30	
60	
75	
90	
100	
BULLETIN	

CITY OF CHICAGO
DEPARTMENT OF WATER MANAGEMENT
BUREAU OF ENGINEERING SERVICES

VITRIFIED CLAY PIPE DRAIN CONNECTIONS AND SEWER TRENCH DETAIL

DRAWN: ABK
DESIGNED: ___
CHECKED: ___
APPROVED: ___
REVISED: ___

A.1

___ OF ___

PN _____

DESIGN BY:										
DRAWN BY:										
CHECKED BY:										
APPROVED BY:		4	7/3/2023	ISSUED FOR BID						
CDOT/APPROVED BY:		NO.	DATE	REVISIONS	DES.	DRW.	CHK.	DCCO	CDOT	

TranSystems
TRANSYSTEMS
222 SOUTH RIVERSIDE PLAZA SUITE 610
CHICAGO, ILLINOIS 60606

SOM
SKIDMORE, OWINGS & MERRILL LLP
224 SOUTH MICHIGAN AVENUE, SUITE 1000
CHICAGO, ILLINOIS 60604

MICHAEL J. LEY
062-055367
LICENSED PROFESSIONAL ENGINEER
ILLINOIS

CDOT
CHICAGO DEPARTMENT OF TRANSPORTATION
DIVISION OF ENGINEERING

STATE / LAKE LOOP ELEVATED STATION
200 NORTH STATE STREET, CHICAGO, IL 60601

DRAINAGE DETAILS

CDOT PROJECT D-1-209 | DATE: 7/3/2023

SPEC. NO.

DRAWING NO. C-631

REVISION NO.

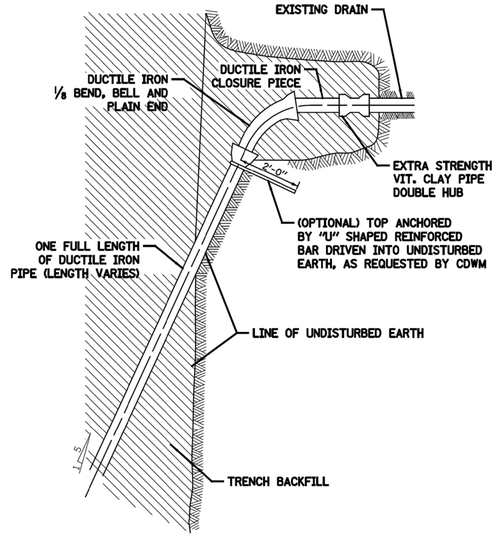

TYPICAL DRAIN CONNECTIONS FOR EXISTING DRAINS

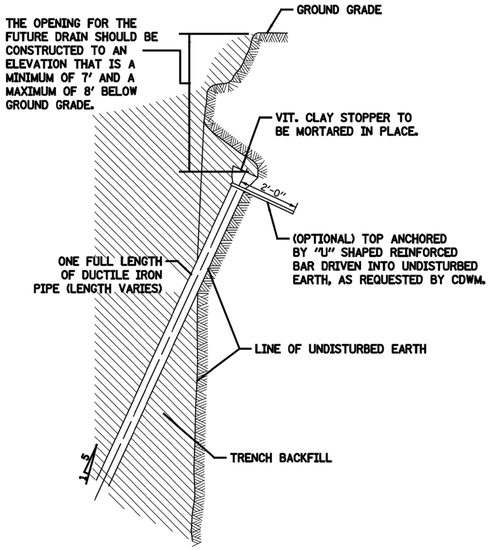

TYPICAL DRAIN STACKS FOR FUTURE USE

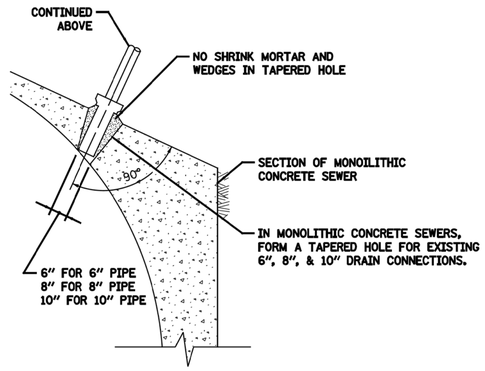

FOR MONOLITHIC CONCRETE SEWERS

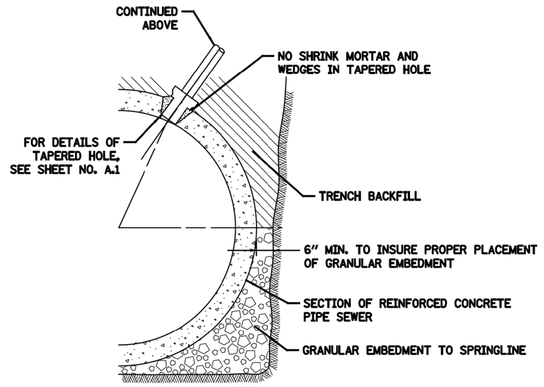

FOR REINFORCED CONCRETE PIPE SEWERS

DUCTILE IRON PIPE DRAIN CONNECTIONS

NOTES:
1. DUCTILE IRON PIPE MUST BE BELL END WITH PUSH-ON JOINTS CONFORMING TO ANSI SPECIFICATIONS A21.51 WITH CLASS 52 THICKNESS.
2. CONNECTIONS AND STACKS SHOWN MUST BE USED FOR 6", 8", & 10" DRAINS ONLY.
3. FOR VITRIFIED CLAY PIPE DRAIN CONNECTION AND DRAIN STACK CONSTRUCTION, SEE SHEET NO. A.1.
4. FOR TRENCH BACKFILL, REFER TO IDOT SSRBC, ARTICLE 1003.04.
5. FOR GRANULAR EMBEDMENT, USE CA-11, CRUSHED GRAVEL, CRUSHED STONE, OR CRUSHED CONCRETE.

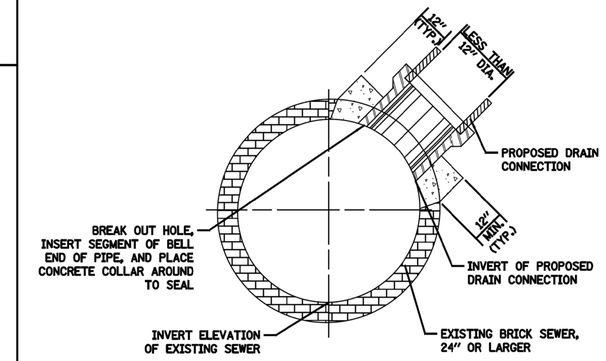

(NOT TO SCALE)

FOR BRICK SEWERS

BRICK SEWER DRAIN CONNECTIONS

STANDARD REVISIONS	
DATE	DESCRIPTION
9/20/17	APPROVED PLAN

PERCENT COMPLETE	DATE
30	
60	
75	
90	
100	
BULLETIN	

CITY OF CHICAGO
DEPARTMENT OF WATER MANAGEMENT
BUREAU OF ENGINEERING SERVICES

DUCTILE IRON PIPE DRAIN CONNECTIONS

DRAWN: SEE DESIGNED: CHECKED: REVISED:

A.2

___ OF ___

PN _____

$FILE$
$DATE$

CDWM_Details.cel 9/20/2017 11:26:35 AM

DESIGN BY:										
DRAWN BY:										
CHECKED BY:										
APPROVED BY:		4	7/3/2023	ISSUED FOR BID						
CDOT/APPROVED BY:		NO.	DATE	REVISIONS	DES.	DRW.	CHK.	DCCO	CDOT	

TRANSYSTEMS
222 SOUTH RIVERSIDE PLAZA SUITE 610
CHICAGO, ILLINOIS 60606

SKIDMORE, OWINGS & MERRILL LLP
224 SOUTH MICHIGAN AVENUE, SUITE 1000
CHICAGO, ILLINOIS 60604

MICHAEL J. LEV
062-055367
LICENSED PROFESSIONAL ENGINEER
STATE OF ILLINOIS

CHICAGO DEPARTMENT OF TRANSPORTATION
DIVISION OF ENGINEERING

STATE / LAKE LOOP ELEVATED STATION
200 NORTH STATE STREET, CHICAGO, IL 60601

SPEC. NO.

DRAINAGE DETAILS

DRAWING NO. C-632

CDOT PROJECT D-1-209

DATE: 7/3/2023

REVISION NO.

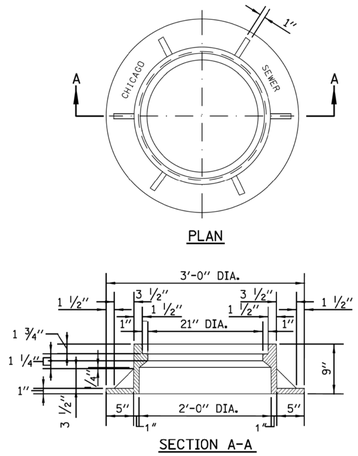

NOTE: METAL PLATES MUST BE FURNISHED FOR PERFORATED LIDS ON MANHOLES.

HEAVYWEIGHT MANHOLE FRAME

MATERIAL: CAST IRON

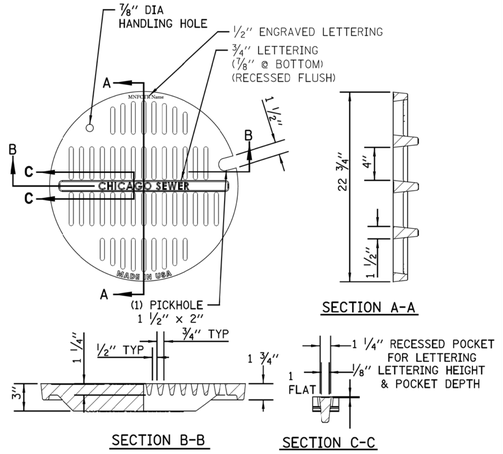

MATERIALS
GRATE-GRAY IRON
ASTM A48 CL35B

DESIGN LOAD
HEAVY DUTY

COATING
UNDIPPED

OPEN AREA
85.6 SQ. IN.

STANDARD CB/MH LID

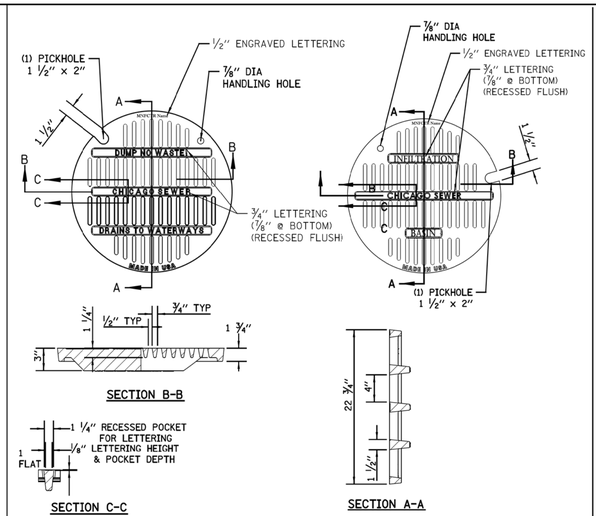

MATERIALS
GRATE-GRAY IRON
ASTM A48 CL35B

DESIGN LOAD
HEAVY DUTY

COATING
UNDIPPED

OPEN AREA
85.6 SQ. IN.

STANDARD LID FOR STORM ONLY/ INFILTRATION SYSTEMS

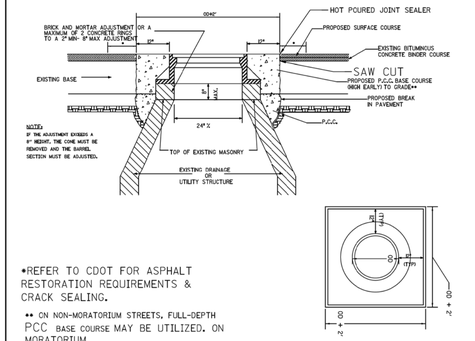

•REFER TO CDOT FOR ASPHALT RESTORATION REQUIREMENTS & CRACK SEALING.

** ON NON-MORATORIUM STREETS, FULL-DEPTH PCC BASE COURSE MAY BE UTILIZED. ON MORATORIUM STREETS, PAVEMENT RESTORATION SHALL ADHERE T CDOT REQUIREMENTS.

PLAN VIEW (BASE TO GRADE)

NOTES:

IF THE ADJUSTMENT EXCEEDS AN 8" HEIGHT, THE CONE MUST BE REMOVED AND THE BARREL SECTION MUST BE ADJUSTED.

THE CONTRACTOR IS REQUIRED TO REPLACE ANY BROKEN FRAMES AND LIDS OF SEWER STRUCTURES WITH STANDARD FRAMES AND LIDS OF THE DWM. IN ADJUSTMENT OR RECONSTRUCTION OF SEWER STRUCTURES, ANY NON-STANDARD FRAMES AND LIDS MUST BE REPLACED WITH STANDARD FRAMES AND LIDS. IN ADJUSTMENT OR RECONSTRUCTION OF INLETS, ANY NON-STANDARD INLETS (GUTTER BOXES) MUST BE REPLACED WITH DWM STANDARD INLETS.

THE FRAMES AND LIDS OF SEWER STRUCTURES TO BE ABANDONED, REMOVED, OR FILLED MUST BE SALVAGED AND THE DWM NOTIFIED FOR PICK UP.

MANHOLES, CATCH BASINS AND INLETS MUST BE PROTECTED FROM THE ENTRY OF ASPHALT/DEBRIS INTO THE SEWER SYSTEM DURING CONSTRUCTION. THE CONTRACTOR MUST MARK LOCATIONS OF ALL SEWER STRUCTURES ON THE SIDEWALK BEFORE STARTING PAVEMENT REMOVAL/REPLACEMENT. ADJUSTMENT OF FRAMES AND LIDS OF SEWER STRUCTURES MUST BE COMPLETED PRIOR TO STREET RESURFACING.

DETAIL OF FRAME ADJUSTMENT

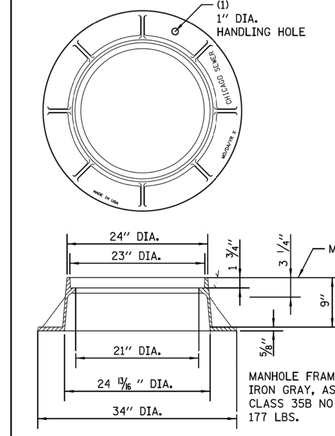

MANHOLE FRAME CAST IRON GRAY, ASTM A-48 CLASS 35B NO PAINT 177 LBS.

LIGHTWEIGHT MANHOLE FRAME

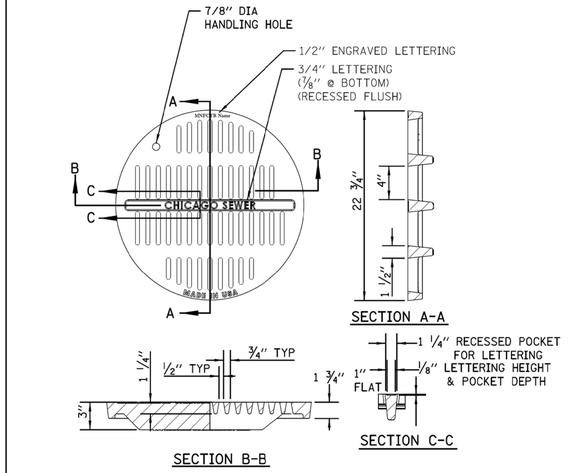

ADA COMPLIANT CATCH BASIN/MANHOLE LID

NOTE:
NOT TO BE USED WITHOUT PRIOR APPROVAL OF CDWM

MATERIALS
GRATE-GRAY IRON
ASTM A48 CL35B

DESIGN LOAD
HEAVY DUTY

COATING
UNDIPPED

OPEN AREA
85.6 SQ. IN.

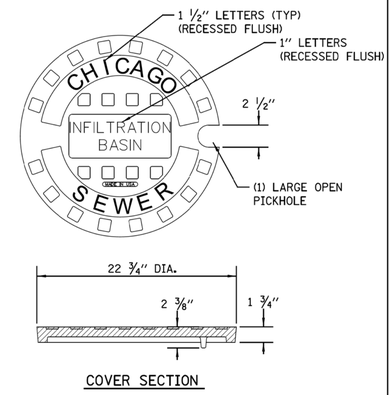

INFILTRATION SOLID LID FOR CATCH BASIN

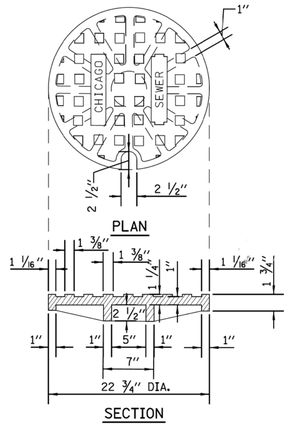

SOLID LID FOR MANHOLES

STANDARD REVISIONS	
DATE	DESCRIPTION
10/1/19	Approved

PERCENT COMPLETE	DATE
30	
60	
75	
90	
100	
BULLETIN	

CITY OF CHICAGO
DEPARTMENT OF WATER MANAGEMENT
BUREAU OF ENGINEERING SERVICES

MANHOLE
LIDS AND FRAMES

DRAWN: SBM
DESIGNED:
CHECKED: CO, CC, SO
REVIEWED:

A.3

___ OF ___

PN _____

$FILE$
$DATE$

CDWM_Details.cel 10/1/2019 3:20:03 PM

DESIGN BY:										
DRAWN BY:										
CHECKED BY:										
APPROVED BY:		4	7/3/2023	ISSUED FOR BID						
CDOT/APPROVED BY:		NO.	DATE	REVISIONS	DES.	DRW.	CHK.	DCCO	CDOT	

TRANSYSTEMS
222 SOUTH RIVERSIDE PLAZA SUITE 610
CHICAGO, ILLINOIS 60606

SKIDMORE, OWINGS & MERRILL LLP
224 SOUTH MICHIGAN AVENUE, SUITE 1000
CHICAGO, ILLINOIS 60604

MICHAEL J. LEVI
062-055367
LICENSED PROFESSIONAL ENGINEER
ILLINOIS

CHICAGO DEPARTMENT OF TRANSPORTATION
DIVISION OF ENGINEERING

STATE / LAKE LOOP ELEVATED STATION
200 NORTH STATE STREET, CHICAGO, IL 60601

DRAINAGE DETAILS

CDOT PROJECT D-1-209

DATE: 7/3/2023

SPEC. NO.

DRAWING NO.
C-633

REVISION NO.

SPECIAL DRAINAGE STRUCTURES FOR PUBLIC STREETS AND ALLEYS

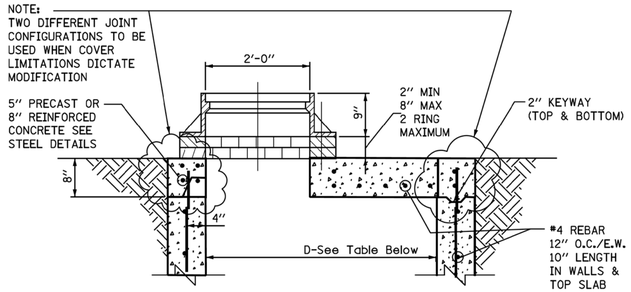

STANDARD FLAT TOP SLAB FOR CATCH BASINS

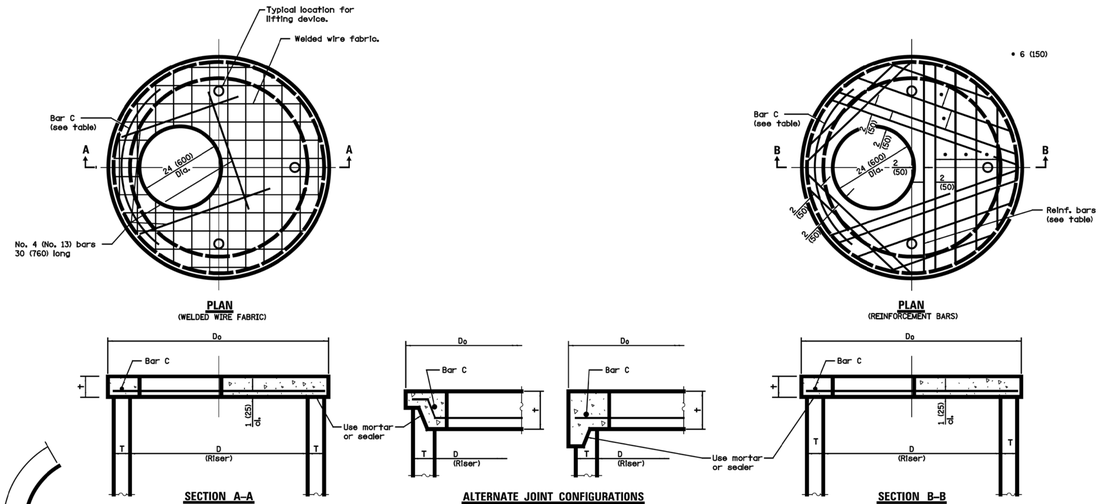

TABLE

D	T	Do (min.)	†	Reinforcement "A$_s$" W.W.F. each direction	OR Bar size	No. 4 (No. 13) Bar C Length	Radius
36 (900)	See applicable Standards	D + 2T	6 (150)	0.20 sq. in./ft. (425 sq. mm/m)	No. 4 (No. 13)	4'-0" (1.2 m)	19 (480)
4'-0" (1.2 m)			6 (150)	0.35 sq. in./ft. (740 sq. mm/m)	No. 5 (No. 16)	4'-6" (1.35 m)	26 (660)
5'-0" (1.5 m)			8 (200)	0.35 sq. in./ft. (740 sq. mm/m)	No. 5 (No. 16)	5'-0" (1.5 m)	32 (810)

GENERAL NOTES

The flat slab top may be used in lieu of the tapered tops shown on Standards 602001, 602011, 602016, 602306, 602401, or 602501 at the option of the Contractor or when field conditions prohibit the use of tapered tops.

All dimensions are in millimeters (inches) unless otherwise shown.

PRECAST REINFORCED CONCRETE FLAT SLAB TOP

STANDARD 602601-03

NOTES:
FLAT TOP SLAB AAPLICATION CAN ONLY BE USED WITH WRITTEN PERMISSION FROM CDWM.
USE LATEST IDOT DETAIL, #602601

STANDARD REVISIONS	
DATE	DESCRIPTION
9/5/17	APPROVED PLAN

PERCENT COMPLETE	DATE
30	
60	
75	
90	
100	
BULLETIN	

CITY OF CHICAGO
DEPARTMENT OF WATER MANAGEMENT
BUREAU OF ENGINEERING SERVICES

FLAT TOP SLAB DETAILS

DRAWN: JEK
DESIGNED:
CHECKED:
REVISED:

A.4

___ OF ___

PN _____

$FILE$
$DATE$

CDWM_Details.cel 9/5/2017 10:04:12 AM

DESIGN BY:										
DRAWN BY:										
CHECKED BY:										
APPROVED BY:		4	7/3/2023	ISSUED FOR BID						
CDOT/APPROVED BY:		NO.	DATE	REVISIONS	DES.	DRW.	CHK.	DCCO	CDOT	

TranSystems
TRANSYSTEMS
222 SOUTH RIVERSIDE PLAZA SUITE 610
CHICAGO, ILLINOIS 60606

SOM
SKIDMORE, OWINGS & MERRILL LLP
224 SOUTH MICHIGAN AVENUE, SUITE 1000
CHICAGO, ILLINOIS 60604

MICHAEL J. LEV
062-055367
LICENSED PROFESSIONAL ENGINEER
OF ILLINOIS

CDOT
CHICAGO DEPARTMENT OF TRANSPORTATION
DIVISION OF ENGINEERING

STATE / LAKE LOOP ELEVATED STATION
200 NORTH STATE STREET, CHICAGO, IL 60601

DRAINAGE DETAILS

CDOT PROJECT D-1-209 | DATE: 7/3/2023

SPEC. NO.

DRAWING NO. C-634

REVISION NO.

NUMBER OF PRECAST RINGS REQUIRED FOR MANHOLES OF VARIOUS HEIGHTS

TOTAL HEIGHT "H"	9" FRAME 42'-0" CORBEL =8'-5"	PRECAST RINGS 4'-0"	2'-8"	1'-4"	8"	4"	BRICK AND/OR MORTAR
5'-0"	3'-5"			1			3"
1"	"			1			4"
2"	"			1		1	5"
3"	"			1		1	1"
4"	"			1		1	2"
5"	"			1		1	3"
6"	"			1			1"
7"	"			1			2"
8"	"			1			3"
9"	"			1			4"
10"	"			1		1	1"
11"	"			1		1	2"
6'-0"	3'-5"			1		1	3"
1"	"			1		1	4"
2"	"		1				1"
3"	"		1				2"
4"	"		1				3"
5"	"		1				4"
6"	"		1			1	1"
7"	"		1			1	2"
8"	"		1			1	3"
9"	"		1			1	4"
10"	"		1		1		1"
11"	"		1		1		2"
7'-0"	3'-5"		1		1		3"
1"	"		1		1		4"
2"	"		1		1	1	1"
3"	"		1		1	1	2"
4"	"		1		1	1	3"
5"	"		1		1	1	4"
6"	"	1					1"
7"	"	1					2"
8"	"	1					3"
9"	"	1					4"
10"	"	1			1		1"
11"	"	1			1		2"
8'-0"	3'-5"	1			1		3"
1"	"	1			1		4"
2"	"	1				1	1"
3"	"	1				1	2"
4"	"	1				1	3"
5"	"	1				1	4"
6"	"	1			1		1"
7"	"	1			1		2"
8"	"	1			1		3"
9"	"	1			1		4"
10"	"	1			1	1	1"
11"	"	1			1	1	2"
9'-0"	3'-5"	1			1	1	3"
1"	"	1			1	1	4"
2"	"	1			1	1	1"
3"	"	1			1	1	2"
4"	"	1			1	1	3"
5"	"	1			1	1	4"
6"	"	1			2"		1"
7"	"	1			2"		2"
8"	"	1			2"		3"
9"	"	1			2"		4"
10"	"	1			2"	1	1"
11"	"	1			2"	1	2"
10'-0"	3'-5"	1			2"	1	3"
1"	"	1			2"	1	4"
2"	"	1			3"		1"
3"	"	1			3"		2"
4"	"	1			3"		3"
5"	"	1			3"		4"
6"	"	1			4"		1"
7"	"	1			4"		2"
8"	"	1			4"		3"
9"	"	1			4"		4"
10"	"	1		1			1"
11"	"	1		1			2"
11'-0"	3'-5"	1		1			3"
1"	"	1		1			4"
2"	"	1	1				1"
3"	"	1	1				2"
4"	"	1	1				3"
5"	"	1	1				4"
6"	"	1	1			1	1"
7"	"	1	1			1	2"
8"	"	1	1			1	3"
9"	"	1	1			1	4"
10"	"	1	1		1		1"
11"	"	1	1		1		2"
12'-0"	3'-5"	1	1		1		3"
1"	"	1	1		1		4"
2"	"	1	1			1	1"
3"	"	1	1			1	2"
4"	"	1	1			1	3"
5"	"	1	1			1	4"
6"	"	1	1		1		1"
7"	"	1	1		1		2"
8"	"	1	1		1		3"
9"	"	1	1		1		4"
10"	"	1	1		1	1	1"
11"	"	1	1		1	1	2"
13'-0"	3'-5"	1	1		1	1	3"
1"	"	1	1		1	1	4"
2"	"	1	1	1			1"
3"	"	1	1	1			2"
4"	"	1	1	1			3"
5"	"	1	1	1			4"
6"	"	1	1	1		1	1"
7"	"	1	1	1		1	2"
8"	"	1	1	1		1	3"
9"	"	1	1	1		1	4"
10"	"	1	1	1	1		1"
11"	"	1	1	1	1		2"
14'-0"	3'-5"	1	1	1	1		3"
1"	"	1	1	1	1		4"
2"	"	1	1	1		1	1"
3"	"	1	1	1		1	2"
4"	"	1	1	1		1	3"
5"	"	1	1	1		1	4"
6"	"	1	1	1	1		1"
7"	"	1	1	1	1		2"
8"	"	1	1	1	1		3"
9"	"	1	1	1	1		4"
10"	"	1	1	1	1	1	1"
11"	"	1	1	1	1	1	2"
15'-0"	3'-5"	1	1	1	1	1	3"
1"	"	1	1	1	1	1	4"
2"	"	1	1	1	2		1"
3"	"	1	1	1	2		2"
4"	"	1	1	1	2		3"
5"	"	1	1	1	2		4"
6"	"	1	1	1	2	1	1"
7"	"	1	1	1	2	1	2"
8"	"	1	1	1	2	1	3"
9"	"	1	1	1	2	1	4"
10"	"	1	1	1	3		1"
11"	"	1	1	1	3		2"
16'-0"	3'-5"	1	1	1	3		3"
1"	"	1	1	1	3		4"
2"	"	1	1	1	3	1	1"
3"	"	1	1	1	3	1	2"
4"	"	1	1	1	3	1	3"
5"	"	1	1	1	3	1	4"
6"	"	1	1	1	3	1	1"
7"	"	1	1	1	3	1	2"
8"	"	1	1	1	3	1	3"
9"	"	1	1	1	3	1	4"
10"	"	1	1	1	3	1	1"
11"	"	1	1	1	3	1	2"
17'-0"	3'-5"	1	1	1	3	1	3"
1"	"	1	1	1	3	1	4"
2"	"	1	1	1	3	1	1"
3"	"	1	1	1	3	1	2"
4"	"	1	1	1	3	1	3"
5"	"	1	1	1	3	1	4"
6"	"	1	1	1	3	1	1"
7"	"	1	1	1	3	1	2"
8"	"	1	1	1	3	1	3"
9"	"	1	1	1	3	1	4"
10"	"	1	1	1	3	1	1"
11"	"	1	1	1	3	1	2"
18'-0"	3'-5"	1	1	1	3	1	3"
1"	"	1	1	1	3	1	4"
2"	"	1	1	1	3	1	1"
3"	"	1	1	1	3	1	2"
4"	"	1	1	1	3	1	3"
5"	"	1	1	1	3	1	4"
6"	"	1	1	1	3	1	1"
7"	"	1	1	1	3	1	2"
8"	"	1	1	1	3	1	3"
9"	"	1	1	1	3	1	4"
10"	"	1	1	1	3	1	1"
11"	"	1	1	1	3	1	2"
19'-0"	3'-5"	1	1	1	3	1	3"
1"	"	1	1	1	3	1	4"
2"	"	1	1	1	3	1	1"
3"	"	1	1	1	3	1	2"
4"	"	1	1	1	3	1	3"
5"	"	1	1	1	3	1	4"
6"	"	1	1	1	4		1"
7"	"	1	1	1	4		2"
8"	"	1	1	1	4		3"
9"	"	1	1	1	4		4"
10"	"	1	1	1	4	1	1"
11"	"	1	1	1	4	1	2"
20'-0"	3'-5"	1	1	1	4	1	3"
1"	"	1	1	1	4	1	4"
2"	"	1	1	1	4	1	1"
3"	"	1	1	1	4	1	2"
4"	"	1	1	1	4	1	3"
5"	"	1	1	1	4	1	4"
6"	"	1	1	1	4	2	1"
7"	"	1	1	1	4	2	2"
8"	"	1	1	1	4	2	3"
9"	"	1	1	1	4	2	4"
10"	"	1	1	1	5		1"
11"	"	1	1	1	5		2"
21'-0"	3'-5"	1	1	1	5		3"
1"	"	1	1	1	5		4"
2"	"	1	1	1	5	1	1"
3"	"	1	1	1	5	1	2"
4"	"	1	1	1	5	1	3"
5"	"	1	1	1	5	1	4"
6"	"	1	1	1	5	2	1"
7"	"	1	1	1	5	2	2"
8"	"	1	1	1	5	2	3"
9"	"	1	1	1	5	2	4"
10"	"	1	1	1	5	3	1"
11"	"	1	1	1	5	3	2"
22'-0"	3'-5"	1	1	1	5	3	3"
1"	"	1	1	1	5	3	4"
2"	"	1	1	1	5	4	1"
3"	"	1	1	1	5	4	2"
4"	"	1	1	1	5	4	3"
5"	"	1	1	1	5	4	4"
6"	"	1	1	1	6		1"
7"	"	1	1	1	6		2"
8"	"	1	1	1	6		3"
9"	"	1	1	1	6		4"
10"	"	1	1	1	6	1	1"
11"	"	1	1	1	6	1	2"
23'-0"	3'-5"	1	1	1	6	1	3"
1"	"	1	1	1	6	1	4"
2"	"	1	1	1	6	2	1"
3"	"	1	1	1	6	2	2"
4"	"	1	1	1	6	2	3"
5"	"	1	1	1	6	2	4"
6"	"	1	1	1	6	3	1"
7"	"	1	1	1	6	3	2"
8"	"	1	1	1	6	3	3"
9"	"	1	1	1	6	3	4"
10"	"	1	1	1	6	4	1"
11"	"	1	1	1	6	4	2"
24'-0"	3'-5"	1	1	1	6	4	3"
1"	"	1	1	1	6	4	4"
2"	"	2					1"
3"	"	2					2"
4"	"	2					3"
5"	"	2					4"
6"	"	2			1		1"
7"	"	2			1		2"
8"	"	2			1		3"
9"	"	2			1		4"
10"	"	2			1	1	1"
11"	"	2			1	1	2"

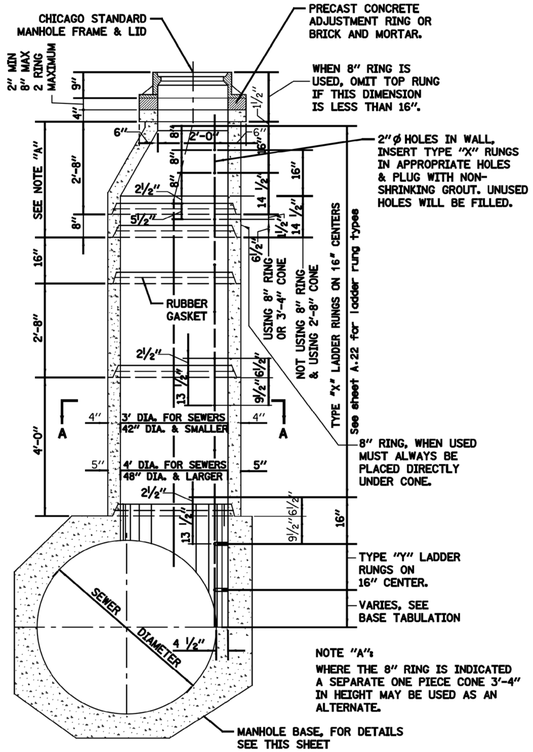

DETAIL OF PRECAST RINGS

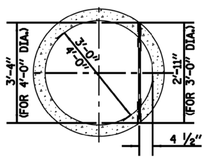

1"ø LADDER RUNG,TYPE "X", LENGTH 2'-11" OR 3'-4" INSERTED INTO 2"ø HOLE IN WALL & PLUGGED BY MANUFACTURER WITH NON-SHRINKING GROUT.

SECTION A-A

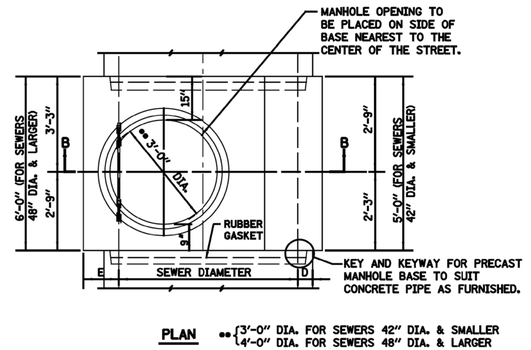

PLAN ** {3'-0" DIA. FOR SEWERS 42" DIA. & SMALLER; 4'-0" DIA. FOR SEWERS 48" DIA. & LARGER

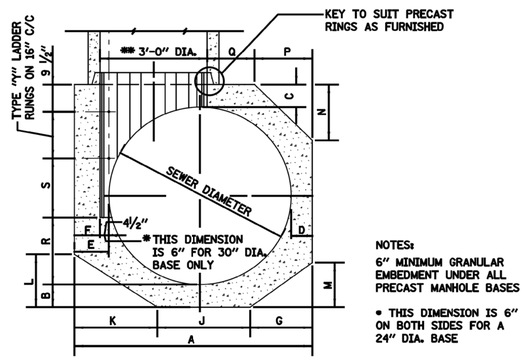

NOTES:
6" MINIMUM GRANULAR EMBEDMENT UNDER ALL PRECAST MANHOLE BASES

* THIS DIMENSION IS 6" ON BOTH SIDES FOR A 24" DIA. BASE

SECTION B-B

DETAIL OF PRECAST BASE

SEWER DIA.	DIMENSIONS OF PRECAST MANHOLE BASE A	B	C	D	E	F	G	J	K	L	M	N	P	Q	R	S	# "Y" RUNGS
36"	4'-4 1/2"	6"	6"	6"	10 1/2"	6"	16"	16"	20 1/2"	12 1/2"	9 1/2"	—	—	10 1/2"	18"	14 1/2"	1
30"	4'-0"	6"	6"	6"	12"	6"	14"	14"	20"	12"	8 1/2"	—	—	6"	15"	11 1/2"	1
24"	4'-0"	6"	6"	12"	12"	6"	16"	16"	16"	9 1/2"	9 1/2"	—	—	6"	12"	8 1/2"	1

NOTES:

PRECAST CONCRETE RINGS MUST CONFORM TO A.S.T.M. DESIGNATION C76 FOR "REINFORCED CONCRETE CULVERT, STORM DRAIN, AND SEWER PIPE", CLASS II, WALL B.

STANDARD LENGTHS OF RINGS ARE: 4'-0", 2'-8", 1'-4", 0'-8" AND 0'-4" COLLAR.

ALL REINFORCEMENT STEEL REQUIRED FOR PRECAST RINGS MUST BE INCLUDED IN THE PRICE BID FOR ALL MANHOLE ITEMS.

ALL PIPE AND FITTINGS 24 INCHES IN DIAMETER AND LARGER MUST BE CLASS III, IV AND V REINFORCED CONCRETE PIPE AS SPECIFIED IN THE SPECIFICATIONS FOR "REINFORCED CONCRETE CULVERT STORM DRAIN, AND SEWER PIPE." A.S.T.M. DESIGNATION C76, TABLE III, IV AND V, WALL B OR WALL C WITH CIRCULAR OR ELLIPTICAL REINFORCEMENT

$FILE$
$DATE$

STANDARD REVISIONS	
DATE	DESCRIPTION
9/19/17	APPROVED PLAN

PERCENT COMPLETE	DATE
30	
60	
75	
90	
100	
BULLETIN	

CITY OF CHICAGO
DEPARTMENT OF WATER MANAGEMENT
BUREAU OF ENGINEERING SERVICES

TYPE "A" MANHOLE PRECAST RISERS, BASES AND RINGS 24" AND LARGER

DRAWN: BM
DESIGNED:
CHECKED:
REVIEWED:

A.6

___ OF ___
PN _____

CDWM_Details.cel 2/1/2018 11:29:23 AM

DESIGN BY:										
DRAWN BY:										
CHECKED BY:										
APPROVED BY:		4	7/3/2023	ISSUED FOR BID						
CDOT/APPROVED BY:		NO.	DATE	REVISIONS	DES.	DRW.	CHK.	DCCO	CDOT	

TRANSYSTEMS
222 SOUTH RIVERSIDE PLAZA SUITE 610
CHICAGO, ILLINOIS 60606

SKIDMORE, OWINGS & MERRILL LLP
224 SOUTH MICHIGAN AVENUE, SUITE 1000
CHICAGO, ILLINOIS 60604

MICHAEL J. LEV
062-055367
LICENSED PROFESSIONAL ENGINEER
ILLINOIS

CHICAGO DEPARTMENT OF TRANSPORTATION
DIVISION OF ENGINEERING

STATE / LAKE LOOP ELEVATED STATION
200 NORTH STATE STREET, CHICAGO, IL 60601

SPEC. NO.

DRAINAGE DETAILS

DRAWING NO.
C-635

CDOT PROJECT D-1-209

DATE: 7/3/2023

REVISION NO.

STRUCTURE	MARK	SIZE NO.	TYPE	LENGTH	NO. REQD.	WEIGHT – LBS EACH	TOTAL	A	B	C	D	E	F	G	H	J	K	O	R
BASES FOR TYPE "A" MANHOLES (Precast)	36A1	6	T3	12'-2"	6	18.90	113										2'-0"	3'-4½"	
	36A2	6	9	8'-0"	4	5.26	22		6'-0"						2'-8"			3'-0"	20°
	36A3	6	12	4'-4"	4	4.89	19			2'-8"	21"				18"		10½°		
	36A4	6	12	4'-0"	6	6.52	35		3"	3'-0"	17"				14½"		7½°		
	36A5	6	12	8'-4"	6	6.00	30		18"	2'-8"	21"				18"		10½°		
	36A6	6	T3	11'-11"	3	12.43	37										20°	3'-8½"	
	36A7	6	12	8'-4"	6	6.31	50		18"	3'-0"	17"				14½"		8½°		
	36A8	4	STR.	4'-8"	16	3.12	56										8½°		
	TOTAL						358												
	30A1	6	T3	11'-1"	6	16.66	100										2'-0"	3'-10½"	
	30A2	6	9	4'-4"	4	4.62	18		4'-4"						18"			2'-10"	17°
	30A3	6	12	4'-0"	4	4.17	17			2'-4"	21"				18"		10½°		
	30A4	6	12	3'-10"	6	4.00	20		3"	2'-4"	17"				12½"		7½°		
	30A5	6	12	8'-0"	6	5.48	27		18"	2'-4"	21"				18"		10½°		
	30A6	6	T3	11'-11"	3	12.43	37										20°	3'-8½"	
	30A7	6	12	8'-0"	6	5.30	26		18"	2'-1"	18"				12½"		7½°		
	30A8	4	STR.	4'-4"	16	3.12	47										8½°		
	TOTAL						392												
	24A1	6	9	3'-8"	6	5.13	31		3'-0"						13"			2'-0"	14½°
	24A2	6	T3	11'-1"	7	14.02	98										20°	2'-10½"	
	24A3	6	12	3'-6"	10	3.66	37			2'-0"	17"				14½"		8½°		
	24A4	6	12	4'-0"	10	4.98	50		18"	2'-0"	17"				14½"		8½°		
	24A5	6	T3	11'-11"	3	12.43	37										20°	3'-8½"	
	24A6	4	STR.	4'-8"	16	3.12	37										8½°		
	TOTAL						290												

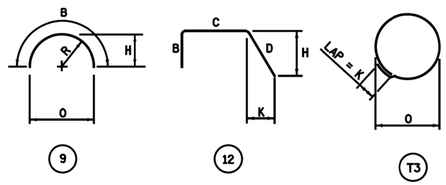

NOTES:
ALL DIMENSIONS ARE OUT TO OUT OF BAR.

BENDING RADII "R" TO OUTSIDE OF BAR.

NUMBERS IN CIRCLES DENOTE BAR TYPE.

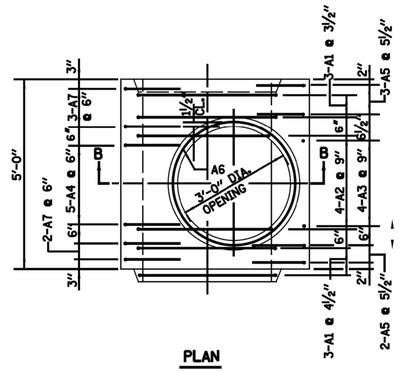

PLAN

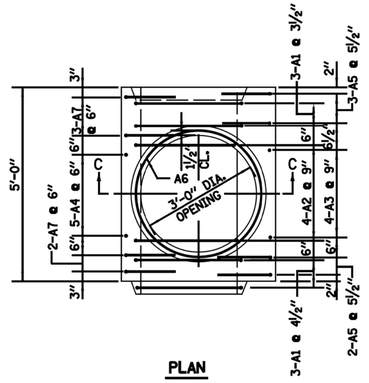

PLAN

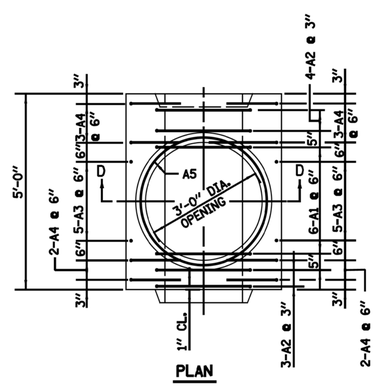

PLAN

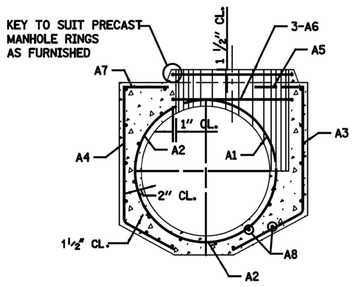

SECTION B-B

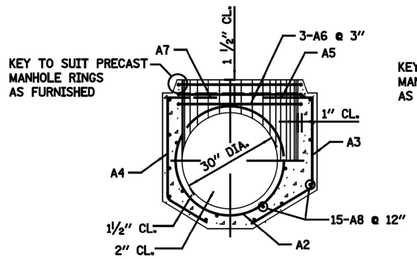

SECTION C-C

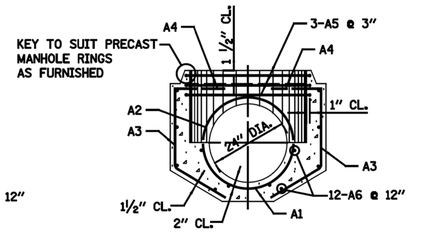

SECTION D-D

MANHOLE BASE FOR SEWERS 36" DIA.

MANHOLE BASE FOR 30" DIA. SEWERS

MANHOLE BASE FOR 24" DIA. SEWERS

PLACING OF CONCRETE- CONCRETE MUST BE PLACED IN ACCORDANCE WITH THE METHOD OUTLINED IN THE CITY OF CHICAGO STANDARD SPECIFICATIONS.
CONSTRUCTION JOINTS - JOINTS NOT INDICATED ON THE DRAWINGS MUST BE SO MADE AND LOCATED AS NOT TO IMPAIR THE STRENGTH OF THE STRUCTURE AND MUST BE APPROVED BY THE COMMISSIONER. JOINTS MUST BE CONSTRUCTED IN ACCORDANCE WITH THE METHOD OUTLINED IN THE SPECIFICATIONS.

CONCRETE PROTECTION FOR REINFORCEMENT- ALL REINFORCING STEEL MUST HAVE CLEAR CONCRETE COVERING AS FOLLOWS (UNLESS OTHERWISE NOTED) :
3" AT EXTERIOR SURFACES WHERE CONCRETE IS DEPOSITED AGAINST THE GROUND;
2.5" AT SURFACES WHERE CONCRETE IS FORMED BUT SUBSEQUENTLY WILL BE IN CONTACT WITH SEWAGE; 2" AT ALL OTHER SURFACES.

REINFORCING STEEL- ALL REINFORCING BARS MUST BE ACCURATELY PLACED AND SECURELY SUPPORTED BY BAR SUPPORTS, SPACERS OR HIGH CHAIRS.
ALL LAPS IN REINFORCING STEEL MUST BE BASED UPON THE 1989, ACI BUILDING CODE.
UNLESS OTHERWISE NOTED. HOOKS AND BENDS ON BARS MUST CONFORM TO RECOMMENDED DETAILS AS GIVEN IN THE "MANUAL OF STANDARD PRACTICE", C.R.S.I. 1990.

THE FOLLOWING ABBREVIATIONS ARE USED TO INDICATE THE LOCATION OF REINFORCING BARS:

T.	DENOTES	TOP	N.F.	DENOTES	NEAR FACE
BOT.	DENOTES	BOTTOM	F.F.	DENOTES	FAR FACE
I.F.	DENOTES	INSIDE FACE	E.F.	DENOTES	EACH FACE
O.F.	DENOTES	OUTSIDE FACE	E.W.	DENOTES	EACH WAY

PLACING BAR SUPPORTS- ALL REINFORCING BARS MUST BE SUPPORTED, ANCHORED AND TIED AND MUST CONFORM TO THE "RECOMMENDED PRACTICE FOR PLACING REINFORCING BARS", 1986, PREPARED BY THE CONCRETE REINFORCING STEEL INSTITUTE.

STANDARD REVISIONS	
DATE	DESCRIPTION
2/23/17	REVISION

PERCENT COMPLETE	DATE
30	
60	
75	
90	
100	
BULLETIN	

CITY OF CHICAGO
DEPARTMENT OF WATER MANAGEMENT
BUREAU OF ENGINEERING SERVICES

REINFORCEMENT FOR TYPE "A" PRECAST BASES AND RINGS 24" to 36"

DRAWN: JSK
DESIGNED:
CHECKED:
REVISED:

A.7

___ OF ___

PN ____

CDWM_Details.cel 3/17/2017 9:18:40 AM

DESIGN BY:											TranSystems TRANSYSTEMS 222 SOUTH RIVERSIDE PLAZA SUITE 610 CHICAGO, ILLINOIS 60606	SOM SKIDMORE, OWINGS & MERRILL LLP 224 SOUTH MICHIGAN AVENUE, SUITE 1000 CHICAGO, ILLINOIS 60604	MICHAEL J. LEV 062-055367 LICENSED PROFESSIONAL ENGINEER ILLINOIS CDOT CHICAGO DEPARTMENT OF TRANSPORTATION DIVISION OF ENGINEERING
DRAWN BY:													
CHECKED BY:													
APPROVED BY:		4	7/3/2023	ISSUED FOR BID									
CDOT/APPROVED BY:		NO.	DATE	REVISIONS	DES.	DRW.	CHK.	DCCO	CDOT				

STATE / LAKE LOOP ELEVATED STATION
200 NORTH STATE STREET, CHICAGO, IL 60601

SPEC. NO.

DRAINAGE DETAILS

DRAWING NO. C-636

CDOT PROJECT D-1-209 | DATE: 7/3/2023 | REVISION NO.

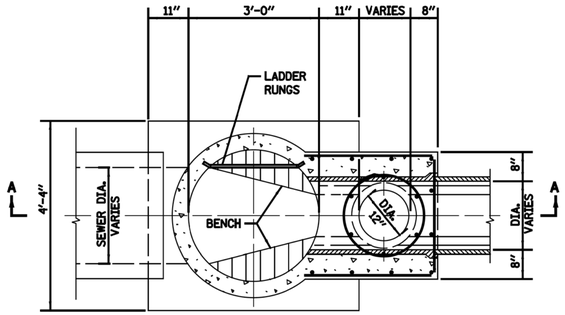

SECTIONAL PLAN-B

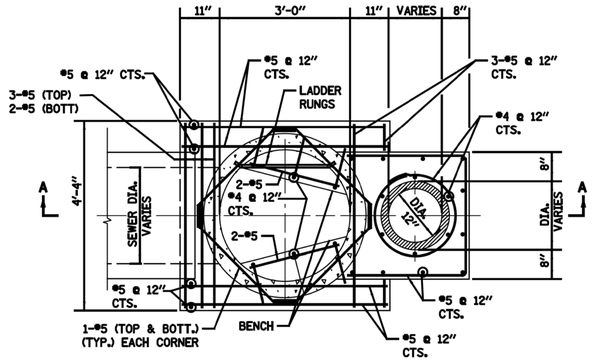

SECTIONAL PLAN-C

LOCATION	SHEET NO.	ELEVATION				
		"A"	"B"	"B1"	"C"	"D"

NOTE: Elevation B1 >= Elevation D

NOTE:
1. UNLESS OTHERWISE NOTED ALL PIPE AND FITTINGS 21" AND UNDER ARE STANDARD STRENGTH VCP.

2. FOR DESIGN ONLY- USE 12" DROP PIPE FOR THE FOLLOWING DEPTHS OF DWF:
6" DWF-42" LATERAL
7" DWF-36" LATERAL
8" DWF-< 24" LATERAL

3. ALL PIPE AND FITTINGS 24 INCHES IN DIAMETER AND LARGER MUST BE CLASS III, IV AND V REINFORCED CONCRETE PIPE AS SPECIFIED IN THE SPECIFICATIONS FOR "REINFORCED CONCRETE CULVERT STORM DRAIN, AND SEWER PIPE." A.S.T.M. DESIGNATION C76, TABLE III, IV AND V, WALL B OR WALL C WITH CIRCULAR OR ELLIPTICAL REINFORCEMENT

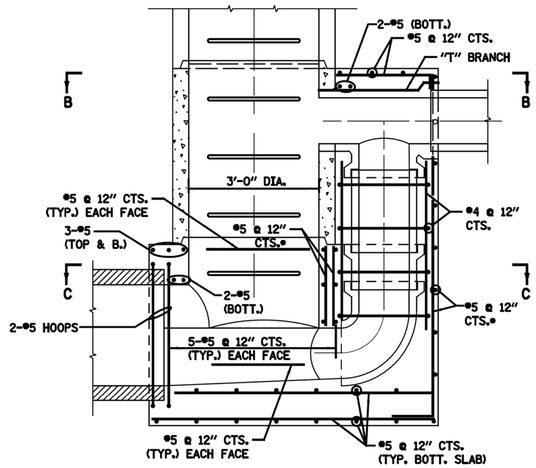

• CUT BAR AT DRAIN PIPE OPENING AS REQUIRED

SECTION A-A

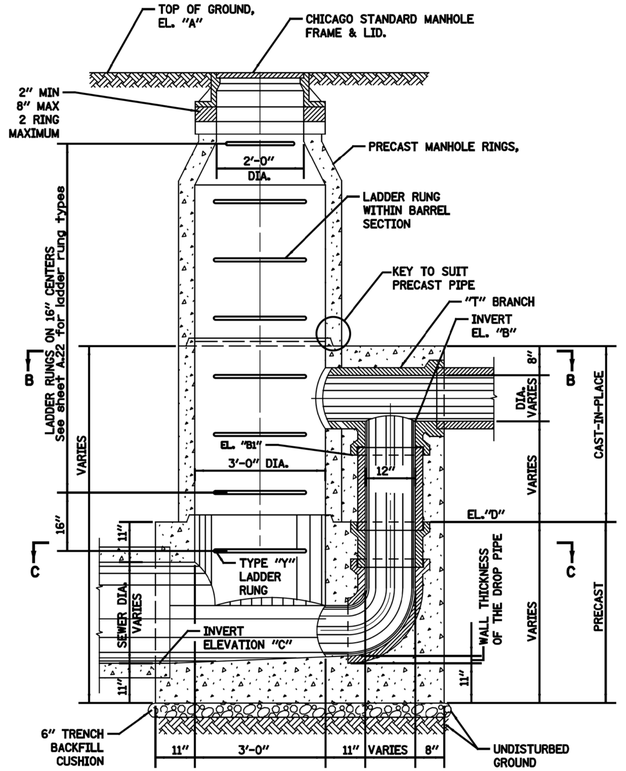

SECTION A-A

STANDARD REVISIONS	
DATE	DESCRIPTION
9/19/17	APPROVED

PERCENT COMPLETE	DATE
30	
60	
75	
90	
100	
BULLETIN	

CITY OF CHICAGO
DEPARTMENT OF WATER MANAGEMENT
BUREAU OF ENGINEERING SERVICES

TYPE C
SINGLE DROP MANHOLE

DRAWN: BBE
DESIGNED:
CHECKED:
REVIEWED:

A.13

___ OF ___

PN _____

$FILE$
$DATE$

DESIGN BY:										
DRAWN BY:										
CHECKED BY:										
APPROVED BY:		4	7/3/2023	ISSUED FOR BID						
CDOT/APPROVED BY:		NO.	DATE	REVISIONS	DES.	DRW.	CHK.	DCCO	CDOT	

TRANSYSTEMS
222 SOUTH RIVERSIDE PLAZA SUITE 610
CHICAGO, ILLINOIS 60606

SOM
SKIDMORE, OWINGS & MERRILL LLP
224 SOUTH MICHIGAN AVENUE, SUITE 1000
CHICAGO, ILLINOIS 60604

MICHAEL J. LEV
062-055367
LICENSED PROFESSIONAL ENGINEER
ILLINOIS

CDOT
CHICAGO DEPARTMENT OF TRANSPORTATION
DIVISION OF ENGINEERING

STATE / LAKE LOOP ELEVATED STATION
200 NORTH STATE STREET, CHICAGO, IL 60601

DRAINAGE DETAILS

CDOT PROJECT D-1-209

DATE: 7/3/2023

SPEC. NO.

DRAWING NO. C-637

REVISION NO.

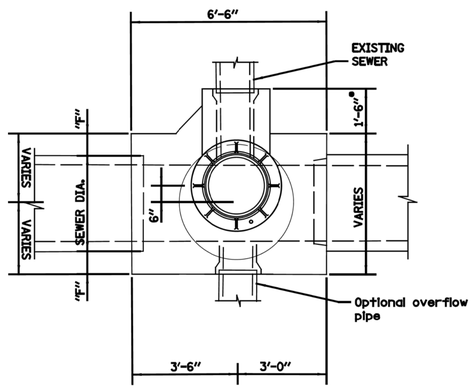

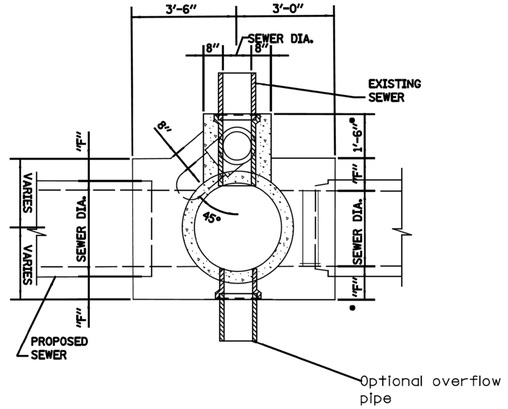

PLAN

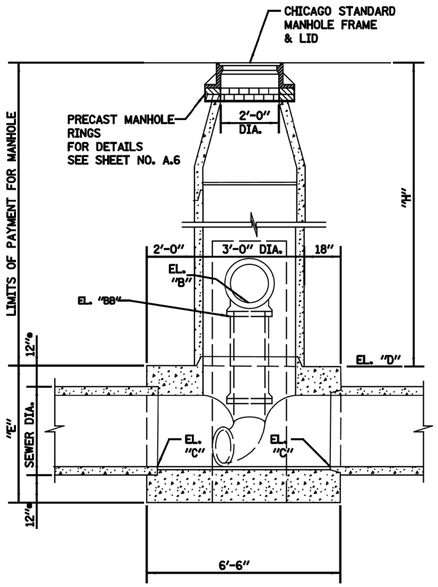

SECTION A-A

SECTIONAL PLAN

• 1'-8" FOR 24" DIA. SEWERS

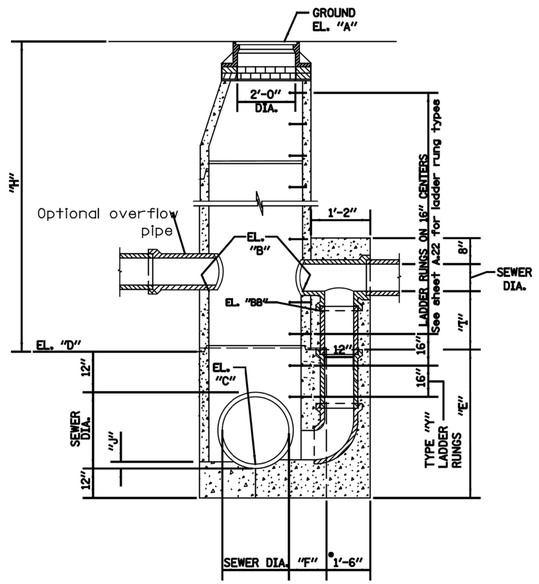

SECTION B-B

NOTE:
1. UNLESS OTHERWISE NOTED ALL PIPE AND FITTINGS 21" AND UNDER ARE STANDARD STRENGTH VCP.

2. FOR DESIGN ONLY- USE 12" DROP PIPE FOR THE FOLLOWING DEPTHS OF DWF:
6" DWF-42" LATERAL
7" DWF-36" LATERAL
8" DWF-< 24" LATERAL

3. ALL PIPE AND FITTINGS 24 INCHES IN DIAMETER AND LARGER MUST BE CLASS III, IV AND V REINFORCED CONCRETE PIPE AS SPECIFIED IN THE SPECIFICATIONS FOR "REINFORCED CONCRETE CULVERT STORM DRAIN, AND SEWER PIPE." A.S.T.M. DESIGNATION C76, TABLE III, IV AND V, WALL B OR WALL C WITH CIRCULAR OR ELLIPTICAL REINFORCEMENT

LOCATION	SHEET NO.	ELEVATION				
		"A"	"B"	"BB"	"C"	"D"

NOTE: Elevation BB >= Elevation D

STANDARD REVISIONS	
DATE	DESCRIPTION
9/19/17	APPROVED

PERCENT COMPLETE	DATE
30	
60	
75	
90	
100	
BULLETIN	

CITY OF CHICAGO
DEPARTMENT OF WATER MANAGEMENT
BUREAU OF ENGINEERING SERVICES

TYPE C
SINGLE DROP MANHOLE

DRAWN: RRK
DESIGNED:
CHECKED:
REVIEWED:

A.14

___ OF ___

PN _____

DESIGN BY:										
DRAWN BY:										
CHECKED BY:										
APPROVED BY:		4	7/3/2023	ISSUED FOR BID						
CDOT/APPROVED BY:		NO.	DATE	REVISIONS	DES.	DRW.	CHK.	DCCO	CDOT	

TRANSYSTEMS
222 SOUTH RIVERSIDE PLAZA SUITE 610
CHICAGO, ILLINOIS 60606

SOM
SKIDMORE, OWINGS & MERRILL LLP
224 SOUTH MICHIGAN AVENUE, SUITE 1000
CHICAGO, ILLINOIS 60604

MICHAEL J. LEW
062-055367
LICENSED PROFESSIONAL ENGINEER
ILLINOIS

CDOT
CHICAGO DEPARTMENT OF TRANSPORTATION
DIVISION OF ENGINEERING

STATE / LAKE LOOP ELEVATED STATION
200 NORTH STATE STREET, CHICAGO, IL 60601

DRAINAGE DETAILS

CDOT PROJECT D-1-209

DATE: 7/3/2023

SPEC. NO.

DRAWING NO.
C-638

REVISION NO.

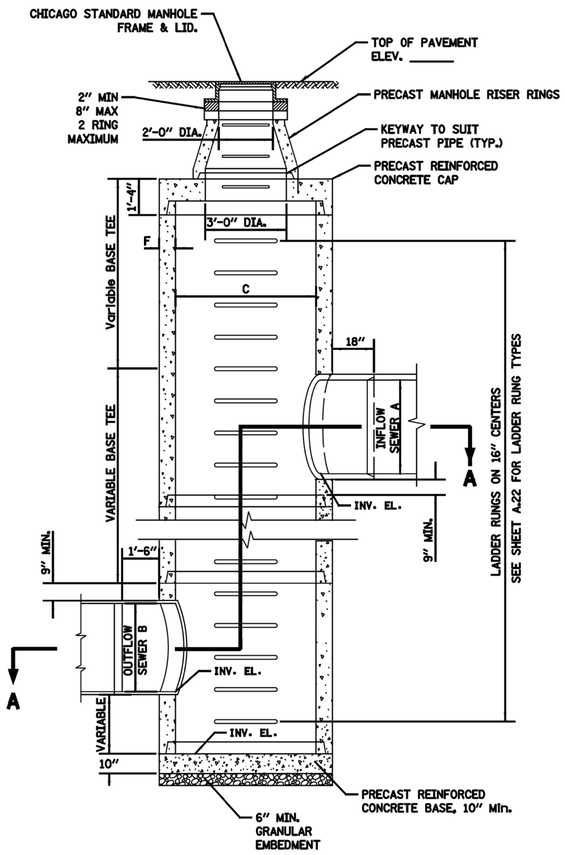

SECTION B-B
SCALE: N.T.S.

PRECAST COMPONENT TABLE							
BASE TEE				WALL THICKNESS	CAP & BASE		LADDER RUNG LENGTH
A	B	C*	D	F	C	E	G
60	60	84	12	8	84	48	48.5
54	54	84	12	7 1/2	78	42	46.5
48	48	72	12	7	72	36	44
42	42	60	9	6	60	24	40
36	36	60	12	6	60	24	40
30	30	48	9	5	48	12	35
24	24	48	12	5	48	12	35
NOTE: ALL MEASUREMENTS ARE IN INCHES							
*DIAMETERS >84" UP TO 144" ARE AVAILABLE IN 1' INCREMENTS							

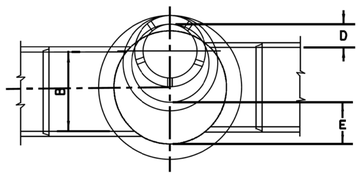

PLAN

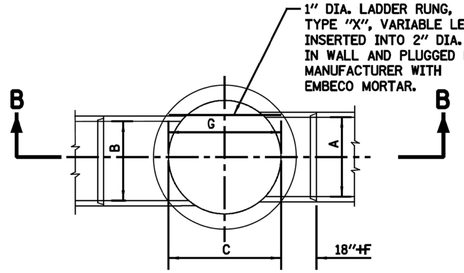

SECTIONAL PLAN A-A

OPTION: W/O BEND

SCALE: N.T.S.

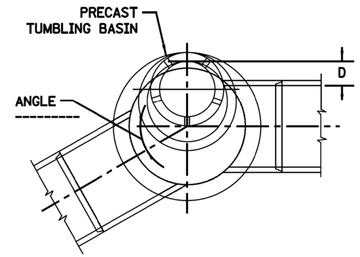

PLAN

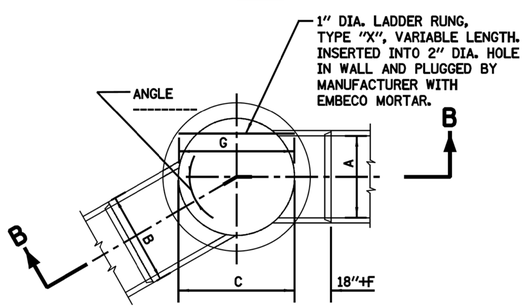

SECTIONAL PLAN A-A

OPTION: WITH BEND

SCALE: N.T.S.

NOTES:

1. FOR CONTRACTOR'S RESPONSIBILITY REGARDING STRUCTURAL DRAWING, SEE SPECIFICATIONS, BOOK 3.
2. ALL PIPE AND FITTINGS 24 INCHES IN DIAMETER AND LARGER MUST BE CLASS III, IV AND V REINFORCED CONCRETE PIPE AS SPECIFIED IN THE SPECIFICATIONS FOR "REINFORCED CONCRETE CULVERT STORM DRAIN, AND SEWER PIPE." A.S.T.M. DESIGNATION C76, TABLE III, IV AND V, WALL B OR WALL C WITH CIRCULAR OR ELLIPTICAL REINFORCEMENT;
3. FOR ADDITIONAL INFORMATION, SEE SPECIFICATIONS, BOOK 3.

STANDARD REVISIONS	
DATE	DESCRIPTION
9/19/17	Approved Plan

PERCENT COMPLETE	DATE
30	
60	
75	
90	
100	
BULLETIN	

CITY OF CHICAGO
DEPARTMENT OF WATER MANAGEMENT
BUREAU OF ENGINEERING SERVICES

PRECAST TUMBLING BASIN DETAILS

DRAWN: ABK
DESIGNED:
CHECKED:
REVIEWED:

A.18

___ OF ___

PN _____

$FILE$
$DATE$

DESIGN BY:										
DRAWN BY:										
CHECKED BY:										
APPROVED BY:		4	7/3/2023	ISSUED FOR BID						
CDOT/APPROVED BY:		NO.	DATE	REVISIONS	DES.	DRW.	CHK.	DCCO	CDOT	

TRANSYSTEMS
222 SOUTH RIVERSIDE PLAZA SUITE 610
CHICAGO, ILLINOIS 60606

SKIDMORE, OWINGS & MERRILL LLP
224 SOUTH MICHIGAN AVENUE, SUITE 1000
CHICAGO, ILLINOIS 60604

MICHAEL J. LEU
062-055367
LICENSED PROFESSIONAL ENGINEER
ILLINOIS

CHICAGO DEPARTMENT OF TRANSPORTATION
DIVISION OF ENGINEERING

STATE / LAKE LOOP ELEVATED STATION
200 NORTH STATE STREET, CHICAGO, IL 60601

DRAINAGE DETAILS

CDOT PROJECT D-1-209

DATE: 7/3/2023

SPEC. NO.

DRAWING NO. C-639

REVISION NO.

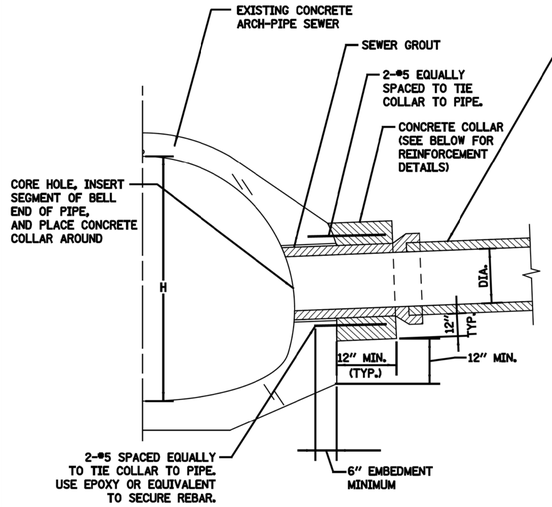

DIAMETER OF THE CONNECTION SHALL BE EQUAL TO OR LESS THAN H/3. IF DIAMETER IS MORE THAN H/3, A SPECIAL DESIGN APPROVAL IS REQUIRED BY A STRUCTURAL ENGINEER, LICENSED IN THE STATE OF ILLINOIS.

CENTER TO CENTER SPACING OF LATERAL CONNECTIONS TO ARCH PIPES SHALL BE NO LESS THAN 6 TIMES THE DIAMETER OF THE CONNECTION SIZE.

EXAMPLE TYPICAL CONNECTION DETAIL

(NOT TO SCALE)

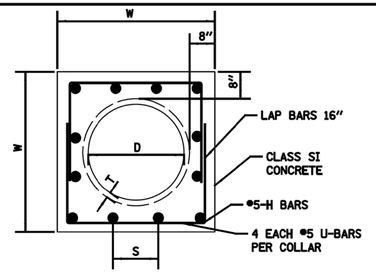

SECTION
(SAME DIAMETERS)

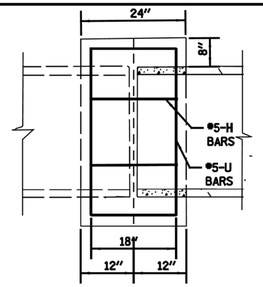

PLAN
(SAME DIAMETERS)

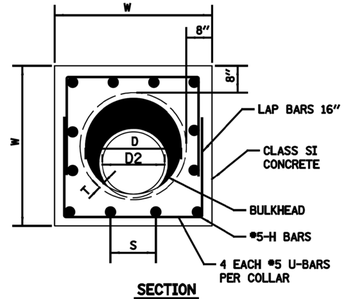

SECTION
(DIFFERENT DIAMETERS)

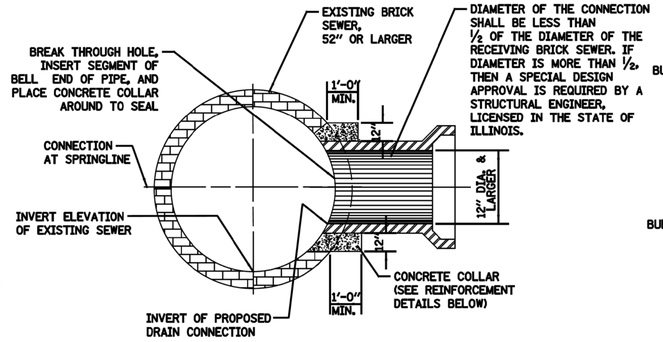

DIAMETER OF THE CONNECTION SHALL BE LESS THAN ½ OF THE DIAMETER OF THE RECEIVING BRICK SEWER. IF DIAMETER IS MORE THAN ½, THEN A SPECIAL DESIGN APPROVAL IS REQUIRED BY A STRUCTURAL ENGINEER, LICENSED IN THE STATE OF ILLINOIS.

EXAMPLE TYPICAL BRICK SEWER CONNECTION FOR CONNECTING PIPE SIZES GREATER THAN 12" DIA.

(NOT TO SCALE)

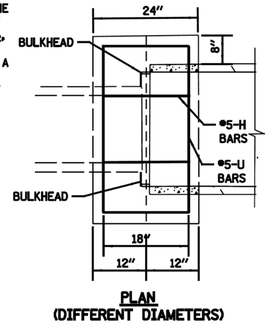

PLAN
(DIFFERENT DIAMETERS)

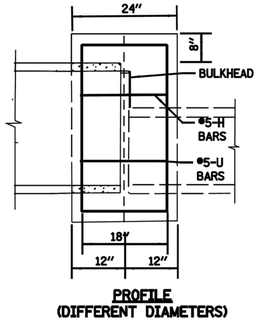

PROFILE
(DIFFERENT DIAMETERS)

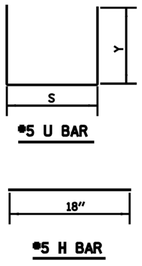

NOTES

1. IF DIFFERENT PIPE SIZES ARE BEING CONNECTED, STEEL REINFORCEMENT BARS SHALL BE SUPPLIED AS GIVEN IN TABLE BELOW FOR THE LARGER DIAMETER PIPE.
2. CONTRACTOR SHALL PROVIDE BULKHEAD TO KEEP CONCRETE FROM SPILLING INTO LARGER PIPE. BULKHEAD MUST BE REMOVED, OR LEFT IN PLACE, ONLY AS APPROVED BY THE COMMISSIONER.

PIPE TO PIPE REINFORCED CONCRETE COLLAR DETAIL

SCALE: N.T.S.

CONRETE COLLAR NOTES:

1. ALL ITEMS AND MATERIALS SHALL CONFORM TO THE LATEST IDOT SSRBC SPECIFICATIONS, UNLESS OTHERWISE NOTED IN SUPPLEMENTAL SPECIFICATIONS FOR THE SPECIFIC PROJECT BEING CONSTRUCTED.
2. ALL CONCRETE SHALL CONFORM TO IDOT SSRBC ARTICLE 1020.04, CLASS SI, WITH A COMPRESSIVE STRENGTH OF 3500 PSI.
3. ALL EPOXY COATED REINFORCEMENT BARS SHALL CONFORM TO IDOT SSRBC SECTION 508, AND ARTICLE 1006.10.
4. UNLESS OTHERWISE SHOWN, THE COVER FOR REINFORCING STEEL SHALL BE AS FOLLOWS: A.) CONCRETE CAST AGAINST PERMANENTLY EXPOSE EARTH: 3" B.) ALL OTHER REINFORCING BARS: 2"
5. CONCRETE COLLARS SHALL BE USED AT ALL EXISTING/PROPOSED PIPE CONNECTIONS. TRIM EXISTING PIPE END TO PROVIDE FLUSH BUTT JOINT, INSTALL REBAR, AND PLACE CONCRETE COLLAR.
6. THE CONTRACTOR SHALL PROVIDE ALL MEASURES AND PRECAUTIONS NECESSARY TO PREVENT DAMAGE TO THE EXISTING SEWER DURING CONSTRUCTION. CONTRACTOR SHALL ADEQUATELY BRACE OR SHORE EXISTING SEWER IF REQUIRED TO MAINTAIN INTEGRITY OF SEWER DURING CONSTRUCTION. SUBMIT DESIGN AND DETAILS, SEALED AND SIGNED BY AN ILLINOIS LICENSED STRUCTURAL ENGINEER, SHOWING TEMPORARY BRACING FOR THE EXISTING SEWER DURING CONSTRUCTION FOR REVIEW PRIOR TO CONSTRUCTION. ANY DAMAGE TO EXISTING STRUCTURE IS RESPONSIBILITY OF THE CONTRACTOR.
7. CONTRACTOR SHALL DIVERT ALL FLOW FROM THE EXISTING SEWER PRIOR TO CONSTRUCTION SO THAT THE WORK CAN BE PERFORMED IN THE DRY CONDITION. SEWER MUST BE MAINTAINED IN SERVICE AT ALL TIMES. SUBMIT MEANS OF FLOW DIVERSION FOR REVIEW PRIOR BREAKING INTO EXISTING BRICK SEWER. ALL EXCAVATION SHALL BE KEPT DEWATERED DURING CONSTRUCTION OPERATIONS UNTIL BACKFILL IN PLACE. PROVISIONS SHALL BE MADE TO PREVENT THE BOTTOM OF ALL EXCAVATIONS FROM FREEZING OR FLOODING AT ALL TIMES. PLAN DIMENSIONS AND DETAILS RELATIVE TO EXISTING STRUCTURE SHALL BE SUBJECT TO NOMINAL CONSTRUCTION VARIATIONS. IT SHALL BE CONTRACTOR'S RESPONSIBILITY TO VERIFY SUCH DIMENSIONS AND DETAILS IN THE FIELD AND MAKE NECESSARY APPROVED ADJUSTMENTS PRIOR TO CONSTRUCTION OR ORDERING MATERIALS. SUCH VARIATIONS SHALL NOT BE CAUSE FOR ADDITIONAL COMPENSATION FOR A CHANGE IN THE SCOPE OF THE WORK, HOWEVER, CONTRACTOR WILL BE PAID FOR THE QUANTITY ACTUALLY FURNISHED AT THE UNIT PRICE OF THE WORK.

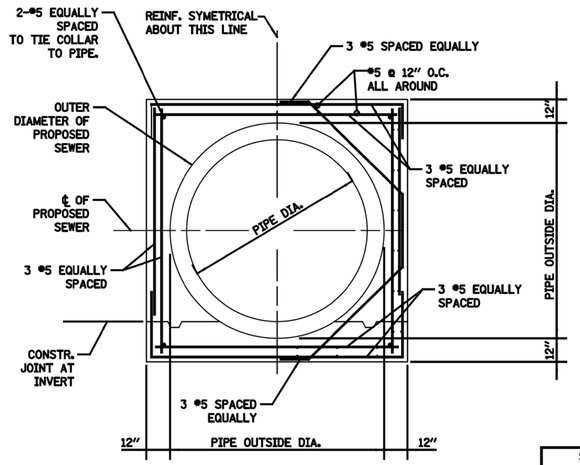

EXAMPLE CONCRETE COLLAR REINFORCEMENT - SECTION

(NOT TO SCALE)

			U BAR				H BAR					
D	T	W				TOTAL			TOTAL	CLASS SI	
PIPE DIA.	PIPE THICKNESS	WIDTH	X	Y	QTY	LENGTH	S	QTY	LENGTH	CONCRETE	#5 EPOXY REBAR
(IN)	(IN)	(IN)	(IN)	(IN)	(EACH)	(FT)	(IN)	(EACH)	(FT)	(CU YD)	(LBS)
24	3.00	46.0	40.00	28.00	4	32.0	9 5/8	16.0	24.0	0.72	58.4
27	3.25	49.5	43.50	29.75	4	34.3	10 1/2	16.0	24.0	0.81	60.8
30	3.50	53.0	47.00	31.50	4	36.7	11 3/8	16.0	24.0	0.89	63.3
33	3.75	56.5	50.50	33.25	4	39.0	9 4/5	20.0	30.0	0.98	72.0
36	4.00	60.0	54.00	35.00	4	41.3	10 1/2	20.0	30.0	1.07	74.4
42	4.50	67.0	61.00	38.50	4	46.0	9 7/8	24.0	36.0	1.26	85.5
48	5.00	74.0	68.00	42.00	4	50.7	11 1/8	24.0	36.0	1.46	90.4

STANDARD REVISIONS	
DATE	DESCRIPTION
7/3/2018	APPROVED PLAN

PERCENT COMPLETE	DATE
30	
60	
75	
90	
100	
BULLETIN	

CITY OF CHICAGO
DEPARTMENT OF WATER MANAGEMENT
BUREAU OF ENGINEERING SERVICES

CONCRETE COLLAR / CONNECTION DETAILS

DRAWN: RBK
DESIGNED:
CHECKED:
REVIEWED:

A.19

___ OF ___

PN _____

$FILE$
$DATE$

DESIGN BY:										
DRAWN BY:										
CHECKED BY:										
APPROVED BY:		4	7/3/2023	ISSUED FOR BID						
CDOT/APPROVED BY:		NO.	DATE	REVISIONS	DES.	DRW.	CHK.	DCCO	CDOT	

TRANSYSTEMS
222 SOUTH RIVERSIDE PLAZA SUITE 610
CHICAGO, ILLINOIS 60606

SKIDMORE, OWINGS & MERRILL LLP
224 SOUTH MICHIGAN AVENUE, SUITE 1000
CHICAGO, ILLINOIS 60604

MICHAEL J. LEVI
062-055367
LICENSED PROFESSIONAL ENGINEER
ILLINOIS

CHICAGO DEPARTMENT OF TRANSPORTATION
DIVISION OF ENGINEERING

STATE / LAKE LOOP ELEVATED STATION
200 NORTH STATE STREET, CHICAGO, IL 60601

DRAINAGE DETAILS

CDOT PROJECT D-1-209

DATE: 7/3/2023

SPEC. NO.

DRAWING NO. C-640

REVISION NO.

STANDARD DRAINAGE STRUCTURES FOR PUBLIC STREETS

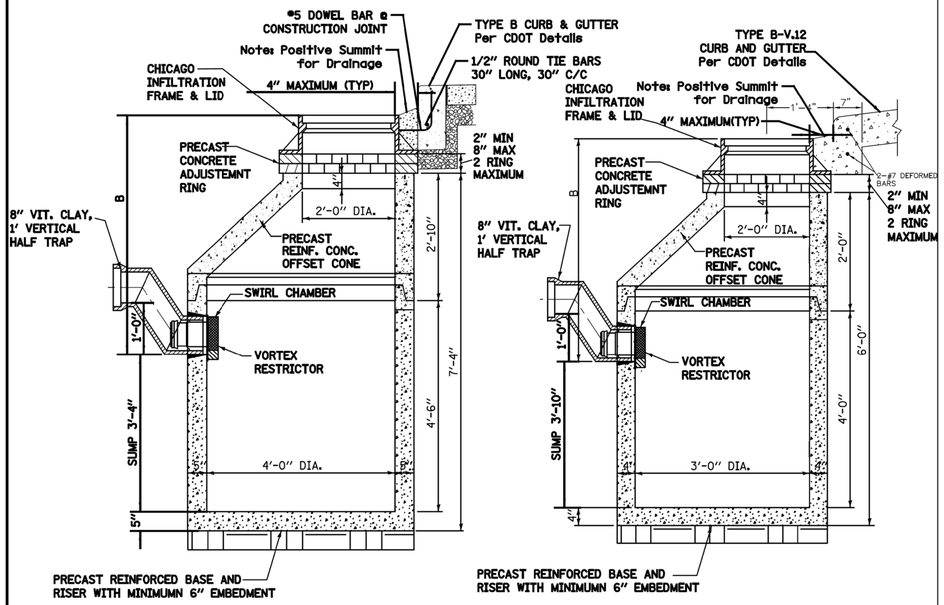

STANDARD CATCH BASIN-4' DIA.

STANDARD CATCH BASIN-3' DIA.

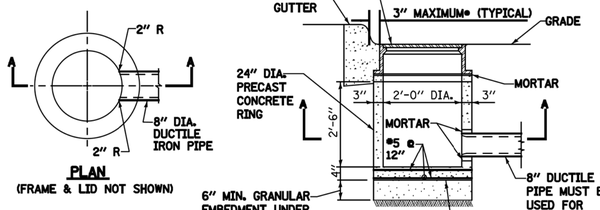

PLAN
(FRAME & LID NOT SHOWN)

STANDARD INLET-2' DIA.

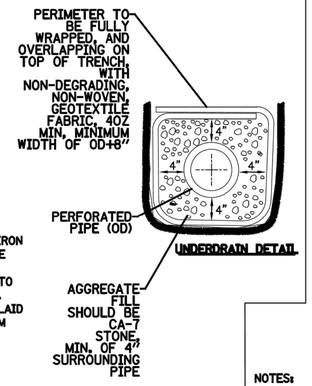

UNDERDRAIN DETAIL

NOTE:
INLETS AND 3' DIAMETER CATCH BASINS ARE TO BE USED ONLY WITH PRIOR APPROVAL OF DWM SEWER ENGINEER OR FIELD INSPECTOR.

1. FOR TRENCH BACKFILL, REFER TO IDOT SSRBC, ARTICLE 1003.04.

2. FOR GRANULAR EMBEDMENT, USE CA-11, CRUSHED GRAVEL, CRUSHED STONE, OR CRUSHED CONCRETE.

3. FOR STABILIZATION STONE, 12" OF CA-1 STONE IS ONLY REQUIRED WHEN UNSTABLE MATERIAL IS ENCOUNTERED AT TRENCH BOTTOM.

•OUTER EDGE OF FRAME TO FACE OF CURB

STANDARD DRAINAGE STRUCTURES FOR PUBLIC ALLEYS

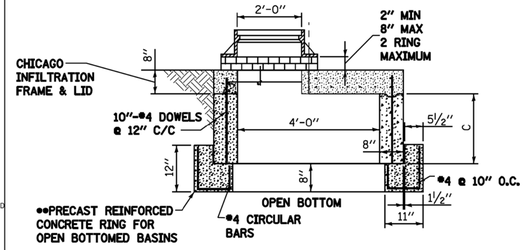

GREEN ALLEY OPEN BOTTOM CATCH BASIN

TO BE USED IF STANDARD CONE WITH REQUIRED SUMP DEPTH INSTALLATION IS IMPOSSIBLE.

••IF FLAT TOP SLAB CATCH BASIN IS USED IN AN OPEN BOTTOM APPLICATION, THE FOLLOWING CRITERIA MUST BE FOLLOWED:

-"C" MUST BE A MINIMUM OF 3 FEET.

- PROVIDE A MINIMUM AGGREGATE BASE OF 1.0 FEET BELOW PRECAST REINFORCED CONCRETE RING.

-GEOTECH FABRIC MUST BE PLACED ON SIDES AND BOTTOM OF AGGREGATE SURROUNDING BASIN.

-AGGREGATE BASE MUST PROVIDE ADEQUATE STORMWATER STORAGE CAPACITY PER THE APPROVED/PERMITTED PLANS.

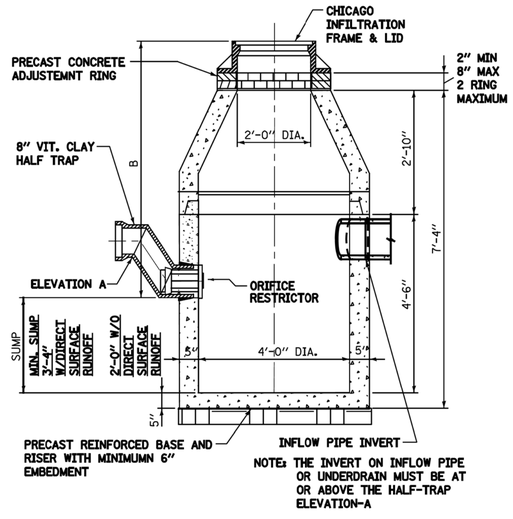

CATCH BASIN-ORIFICE RESTRICTOR

N.T.S.

NOTES:

1. FOR ANY DRAIN TILE CONNECTION, THE WATER TABLE MUST BE AT LEAST 3.5 FEET BELOW ELEVATION A.

2. PVC UNDERDRAINS MUST BE 4" MINIMUMM DIAMETER, (6" RECOMMENDED) AND MUST BE WRAPPED IN GEOTECH FABRIC.

DRAINAGE STRUCTURES RESTRICTORS

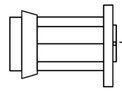

ORIFICE RESTRICTOR

INSERT THE RESTRICTOR INTO THE HALF-TRAP. UPON TIGHTENING OF THE CENTER NUT ON THE FACE OF THE RESTRICTOR, THE RUBBER O-RINGS WILL EXPAND INSIDE THE HALF TRAP, PROVIDING A WATER- TIGHT SEAL. PULL ON RESTRICTOR TO VERIFY THAT A TIGHT FIT IS MADE.

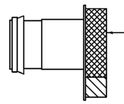

VORTEX RESTRICTOR

PULL ON RESTRICTOR TO VERIFY THAT A TIGHT FIT IS MADE.

INSERT THE RESTRICTOR WITH THE OPENING DOWN. UPON TIGHTENING OF THE 2 BOLTS ON THE FACE OF THE RESTRICTOR, THE RUBBER O-RINGS WILL PROVIDE A WATER- TIGHT SEAL.

GENERAL NOTES:

1. CATCH BASIN TO CATCH BASIN CONNECTIONS ARE ALLOWED IN PRIVATE SITES & ALLEYS. ONLY THE DOWNSTREAM CATCH BASIN IS REQUIRED TO HAVE A HALF-TRAP.

2. IF B < 4 FEET, THEN USE A DUCTILE IRON PIPE HALF TRAP AND FLAT TOP SLAB CATCH BASIN AS NECESSARY.

3. INLETS AND 3' DIAMETER CATCH BASINS ARE TO BE USED ONLY WITH PRIOR APPROVAL OF DWM FIELD INSPECTOR.

RESTRICTOR NOTES:

THE DWM'S RAIN BLOCKER RESTRICTOR PROGRAM MUST BE MAINTAINED WITH ANY ROADWAY IMPROVEMENT.

THE DESIGN OF ANY ROADWAY IMPROVEMENT MUST CONSIDER LIMITING THE NUMBER OF CATCH BASINS TO THE EXTENT PRACTICAL. THE NUMBER OF EXISTING STRUCTURES SHOULD NOT BE INCREASED.

THE RESTRICTORS CAN BE OBTAINED FROM DWM CENTRAL DISTRICT AT 3901 S. ASHLAND AVE. THE CONTRACTOR SHOULD ARRANGE FOR PICK UP BY CONTACTING 312-747-8736 (7AM TO 3PM, M-F). CONTRACTOR MUST CALL 48 HOURS IN ADVANCE OF PICK UP DATE AND TIME.

FLOW RESTRICTORS MUST BE INSTALLED IN ALL CATCH BASINS OUTSIDE OF THE CENTRAL BUSINESS DISTRICT. RESTRICTORS MUST NOT BE INSTALLED IN CATCH BASINS IN CLOSE PROXIMITY TO VIADUCT AREAS, BUS STOPS, OR EMERGENCY ENTRANCES. THE DWM MUST APPROVE THE NON-INSTALLATION OR REMOVAL OF ANY RESTRICTOR. REQUIREMENTS FOR RESTRICTOR INSTALLATION ARE AS FOLLOWS:

•ARTERIAL STREETS: 3-INCH ORIFICE RESTRICTOR
•BUS ROUTES: 3-INCH ORIFICE RESTRICTOR
•RESIDENTIAL STREETS: 3-INCH VORTEX RESTRICTOR
•ALLEYS: 3-INCH ORIFICE RESTRICTOR IN THE LAST CB.
•CLOSED LIDS ARE REQUIRED ON ALL MANHOLES EXCEPT AT INTERSECTIONS WHERE A PERFORATED LID SHALL BE USED.

STANDARD REVISIONS	
DATE	DESCRIPTION
10/27/17	APPROVED

PERCENT COMPLETE	DATE
30	
60	
75	
90	
100	
BULLETIN	

CITY OF CHICAGO
DEPARTMENT OF WATER MANAGEMENT
BUREAU OF ENGINEERING SERVICES

DRAINAGE STRUCTURE DETAILS

DRAWN: SBM
DESIGNED:
CHECKED:
REVIEWED:

A.20

___ OF ___

PN _____

$FILE$
$DATE$

DWM Details.pel 2/1/2018 11:45:06 AM

DESIGN BY:										
DRAWN BY:										
CHECKED BY:										
APPROVED BY:		4	7/3/2023	ISSUED FOR BID						
CDOT/APPROVED BY:		NO.	DATE	REVISIONS	DES.	DRW.	CHK.	DCCO	CDOT	

TRANSYSTEMS
222 SOUTH RIVERSIDE PLAZA SUITE 610
CHICAGO, ILLINOIS 60606

SKIDMORE, OWINGS & MERRILL LLP
224 SOUTH MICHIGAN AVENUE, SUITE 1000
CHICAGO, ILLINOIS 60604

MICHAEL J. LEY
062-055367
LICENSED PROFESSIONAL ENGINEER
ILLINOIS

CHICAGO DEPARTMENT OF TRANSPORTATION
DIVISION OF ENGINEERING

STATE / LAKE LOOP ELEVATED STATION
200 NORTH STATE STREET, CHICAGO, IL 60601

DRAINAGE DETAILS

CDOT PROJECT D-1-209

DATE: 7/3/2023

SPEC. NO.

DRAWING NO. C-641

REVISION NO.

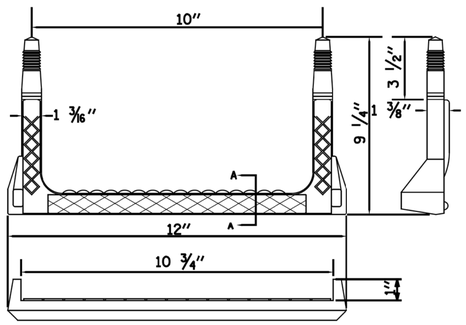

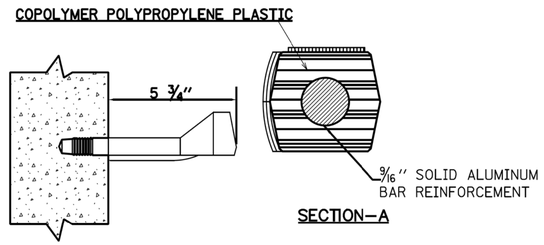

SECTION–A

RECTANGULAR STEP LADDER RUNG

FOR USE ONLY IN 48″ DIAMETER AND LARGER MANHOLES.

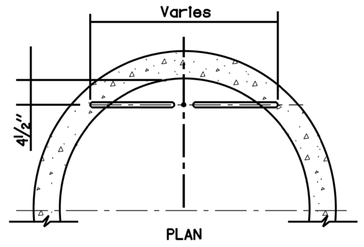

PLAN

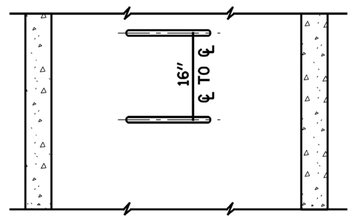

ELEVATION
TYPE X
RISER

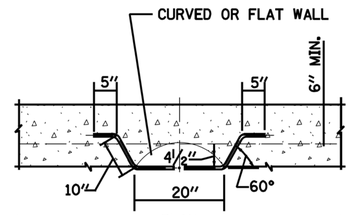

PLAN

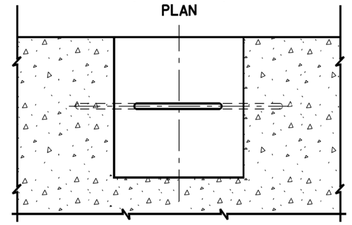

ELEVATION
TYPE Y
BASE

NOTES:

1. VERTICAL SPACING = 16″ O.C., ON VERTICAL WALL ONLY.
2. STEPS SHALL MEET THE REQUIREMENTS OF ASTM C478 IN ADDITION TO A HORIZONTAL PULL-OUT LOAD OF 1000 LBS. WHEN INSTALLED.
3. ALL STEPS SHALL BE VERTICALLY ALIGNED IN A STRAIGHT LINE.
4. MINIMUM CONCRETE STRENGTH MUST BE 3000 PSI
5. HOLES- PREFORMED/DRILLED
   A. HOLES MUST BE PARALLEL
   B. HOLES MUST BE 10″ CENTERED, 1″ DIAMETER
   C. MINIMUM DEPTH- 3 1/2″ TO 3 3/4″

STANDARD REVISIONS	
DATE	DESCRIPTION
5/8/17	APPROVED PLAN

PERCENT COMPLETE	DATE
30	
60	
75	
90	
100	
BULLETIN	

CITY OF CHICAGO
DEPARTMENT OF WATER MANAGEMENT
BUREAU OF ENGINEERING SERVICES

LADDER RUNGS

DRAWN: BBK
DESIGNED:
CHECKED:
REVIEWED:

A.22

___ OF ___

PN _____

#FILE#
#DATE#

CDWM_Details.cel 5/8/2017 9:36:52 AM

DESIGN BY:										
DRAWN BY:										
CHECKED BY:										
APPROVED BY:		4	7/3/2023	ISSUED FOR BID						
CDOT/APPROVED BY:		NO.	DATE	REVISIONS	DES.	DRW.	CHK.	DCCO	CDOT	

TRANSYSTEMS
222 SOUTH RIVERSIDE PLAZA SUITE 610
CHICAGO, ILLINOIS 60606

SKIDMORE, OWINGS & MERRILL LLP
224 SOUTH MICHIGAN AVENUE, SUITE 1000
CHICAGO, ILLINOIS 60604

MICHAEL J. LEW
062-055367
LICENSED PROFESSIONAL ENGINEER
ILLINOIS

CHICAGO DEPARTMENT OF TRANSPORTATION
DIVISION OF ENGINEERING

STATE / LAKE LOOP ELEVATED STATION
200 NORTH STATE STREET, CHICAGO, IL 60601

DRAINAGE DETAILS

CDOT PROJECT D-1-209

DATE: 7/3/2023

SPEC. NO.

DRAWING NO.
C-642

REVISION NO.

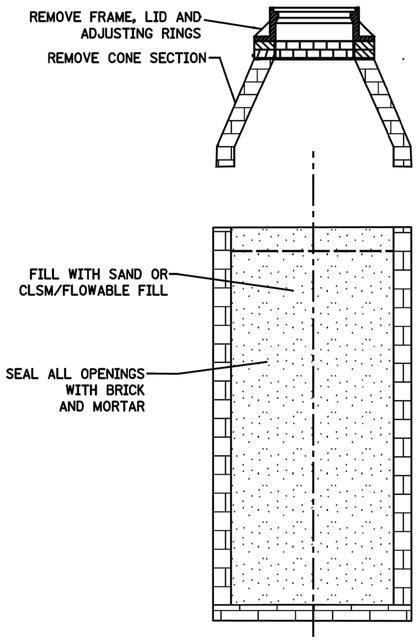

ABANDON CATCH BASIN

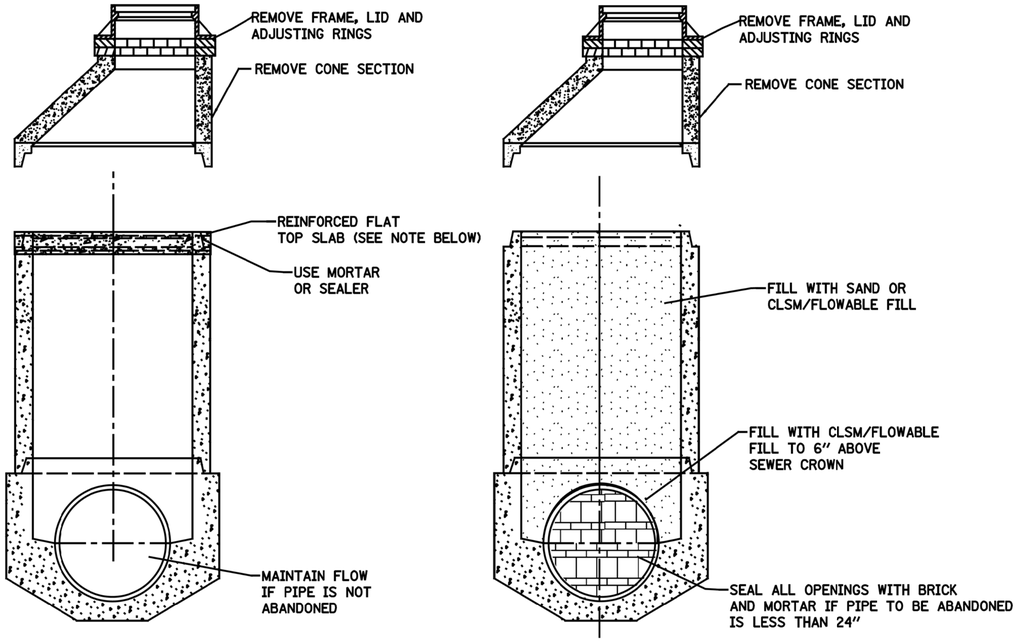

ABANDON MANHOLES

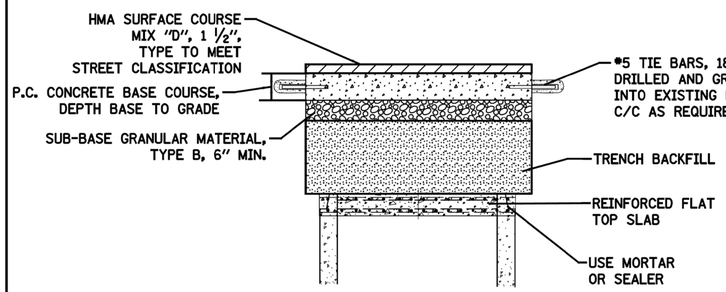

IN PAVEMENT AREA

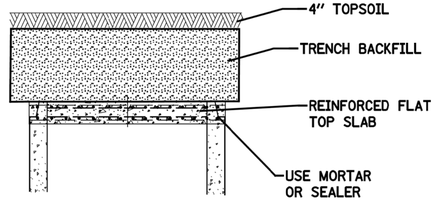

IN LANDSCAPE AREA

NOTE
REINFORCED FLAT TOP SLAB.
SEE IDOT STD. 602601-03 OR CURRENT MODIFIED WITH NO ACCESS HOLE

TEMPORARY HMA RAMP

FOR UTILITY STRUCTURES

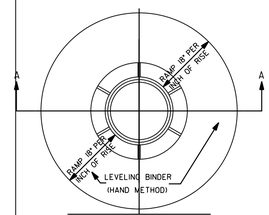

PLAN

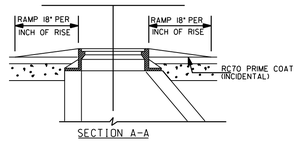

SECTION A-A

NOTE:
THE TEMPORARY HMA RAMP, LEVELING BINDER (HAND METHOD), IS TO BE FORMED WHERE DIRECTED BY THE COMMISSIONER REGARDLESS OF SHAPE (ROUND SQUARE OR RECTANGULAR). THE COST OF REMOVAL SHALL BE INCIDENTAL TO LEVELING BINDER (HAND METHOD).

STANDARD REVISIONS	
DATE	DESCRIPTION
10/15/15	APPROVED PLAN

PERCENT COMPLETE	DATE
30	
60	
75	
90	
100	
BULLETIN	

CITY OF CHICAGO
DEPARTMENT OF WATER MANAGEMENT
BUREAU OF ENGINEERING SERVICES

ABANDONED SEWER STRUCTURE DETAILS

DRAWN: JSM
DESIGNED:
CHECKED:
REVIEWED:

A.23

___ OF ___

PN ___

CDWM_Details.cel 3/16/2017 2:46:02 PM

DESIGN BY:										
DRAWN BY:										
CHECKED BY:										
APPROVED BY:		4	7/3/2023	ISSUED FOR BID						
CDOT/APPROVED BY:		NO.	DATE	REVISIONS	DES.	DRW.	CHK.	DCCO	CDOT	

TRANSYSTEMS
222 SOUTH RIVERSIDE PLAZA SUITE 610
CHICAGO, ILLINOIS 60606

SKIDMORE, OWINGS & MERRILL LLP
224 SOUTH MICHIGAN AVENUE, SUITE 1000
CHICAGO, ILLINOIS 60604

MICHAEL J. LEVI
062-055367
LICENSED PROFESSIONAL ENGINEER
ILLINOIS

CHICAGO DEPARTMENT OF TRANSPORTATION
DIVISION OF ENGINEERING

STATE / LAKE LOOP ELEVATED STATION
200 NORTH STATE STREET, CHICAGO, IL 60601

SPEC. NO.

DRAINAGE DETAILS

DRAWING NO.
C-643

CDOT PROJECT D-1-209

DATE: 7/3/2023

REVISION NO.

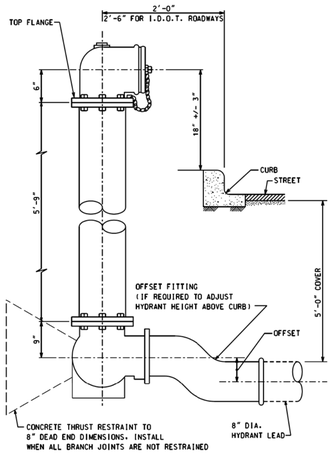

NOTE:

1. SEE FIRE HYDRANT DRAIN DETAILS.
2. ALL BURRIED DUCTILE IRON HYDRANT COMPONENTS MUST BE WRAPPED IN POLYETHYLENE ENCASEMENT.
3. SEE DETAIL D-5 FOR FIRE HYDRANT DRAIN ASEMBLY

REV:04.09 — FIRE HYDRANT SETTING DETAIL — D-2

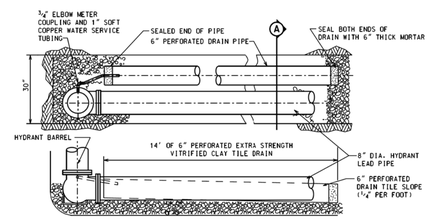

LAYING CONDITION

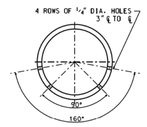

DETAIL "A"
DRAIN TILE DRAIN HOLES

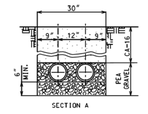

TILE PIPE & HYDRANT BRANCH
EMBEDDED IN PEA GRAVEL

NOTES:

1. WATER TABLE MUST BE BELOW BOTTOM OF TRENCH.
2. LAY DRAIN PIPE IN WATER MAIN TRENCH IF HYDRANT LEAD PIPE IS NOT LONG ENOUGH TO ACHIEVE 14' DRAIN PIPE LENGTH.
3. PLACE DRAIN PIPES SO HOLES ARE FACING DOWN. SEE DETAIL A.
4. COPPER WATER SERVICE TUBING MUST BE ENCASED IN POLYETHYLENE WRAP.

REV:04.09 — FIRE HYDRANT DRAIN DETAIL — D-5

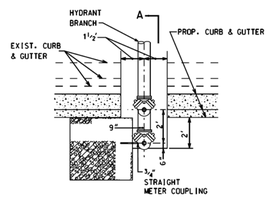

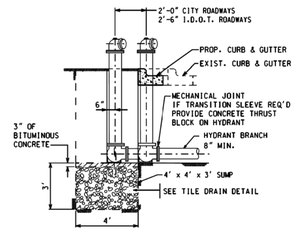

VIEW "A-A"

NOTE:
WATER TABLE MUST BE BELOW
BOTTOM OF DRAIN SUMP.

REV:04.07 — FIRE HYDRANT SUMP DRAIN FOR RELOCATED HYDRANTS — D-6

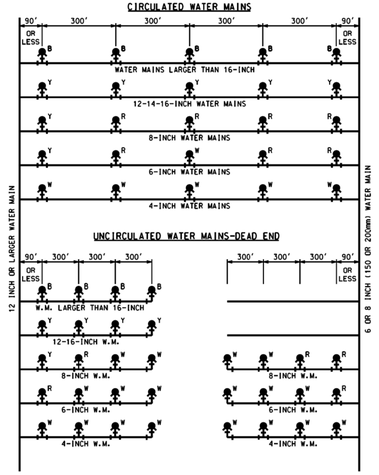

B-BLUE FLANGE Y-YELLOW FLANGE R-RED FLANGE W-WHITE FLANGE
ALL PUBLIC FIRE HYDRANTS ARE TO BE PAINTED RED EXCEPT FOR THE TOP FLANGES WHICH MUST BE COLOR CODED.

REV:04.07 — COLOR CODE FOR FIRE HYDRANTS — D-7

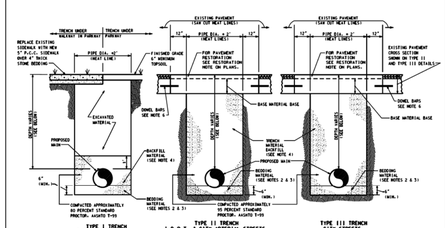

NOTES:

1. PROVIDE PIPE BEDDING TO A DEPTH OF ¼ OF PIPE DIAMETER OR 6" MINIMUM OF COMPACTED GRANULAR MATERIAL, GRAVEL, OR CRUSHED STONE.
2. USE CA-16 BEDDING MATERIAL FOR PIPE SIZES UP TO 16-INCH DIAMETER.
3. USE CA-11 BEDDING MATERIAL FOR PIPE SIZES LARGER THAN 16-INCH DIAMETER.
4. BACKFILL MUST BE COMPACTED UP TO ONE FOOT ABOVE THE PIPE IN TYPICAL TRENCH TYPE I, II, AND III. USE BACKFILL MATERIAL AS SPECIFIED IN TYPE I & III-TRENCH BACKFILL SPECIFICATION CA-06. EXCEPT IN CENTRAL BUSINESS DISTRICT USE CLSM (FLOWABLE FILL).
5. ALL EXCAVATIONS MUST BE PROPERLY SHORED, BRACED AND BRACED TO PROVIDE SAFE WORKING CONDITIONS. ALL IN COMPLIANCE WITH THE CONSTRUCTION STANDARDS FOR EXCAVATIONS AND TRENCHES IN CONSTRUCTION UTILITIES UNDER THE OCCUPATIONAL SAFETY AND HEALTH ACT. (O.S.H.A.).
6. #6 EPOXY COATED BARS, 18" LONG DRILLED AND GROUTED AT 30" CENTERS. EXCEPT ONLY ON CDOT STREETS WHERE CLSM USED AS TRENCH BACKFILL.
7. WHEN TRENCH BACKFILL IS COMPLETE FROM CONCRETE BASE COURSE FLUSH TO TOP AND AT A MINIMUM BOTTOM OF EXISTING PAVEMENT GRADE. THE ADDITIONAL THICKNESS IS TO BE REMOVED DURING PAVEMENT RESTORATION. WHERE PAVEMENT THICKNESS IS NOT SHOWN ON PLANS, USE THE FOLLOWING MINIMUM PLANS. WHEN THE THICKNESS OF THE EXISTING ROADWAY BASE MATERIAL IS LESS THAN THE MINIMUM THICKNESS NOTED BELOW, THE BOTTOM OF BASE MATERIAL SHALL EXTEND BELOW THE BOTTOM OF THE PAVEMENT A DISTANCE EQUAL TO THE DIFFERENCE. MINIMUM THICKNESS FOR ARTERIAL STREETS IS 9 INCHES AND 7 INCHES FOR RESIDENTIAL STREET.
8. PLATE ALL UNATTENDED EXCAVATIONS IN PAVEMENT AREAS AND SECURE PLATES TO PAVEMENT AND PROVIDE BARRIERS IN PARKWAY AREAS.
* CENTRAL BUSINESS DISTRICT IS DEFINED AS THE AREA FROM DIVISION STREET SOUTH TO ROOSEVELT ROAD AND HALSTED STREET EAST TO LAKE MICHIGAN.

PIPE DEPTH REQUIREMENTS	
MINIMUM DEPTH OF COVER FOR WATER VALVES	
SIZE OF PIPE	DEPTH OF COVER
4" TO 12"	5'-0" ± 3"
14"	5'-6" ± 3"
16"	5'-9" ± 3"
18"	6'-0" ± 3"
20"	6'-3" ± 3"
24"	6'-6" ± 3"
30" TO 42"	7'-0" MIN.(SEE PLANS)
48" & LARGER	5' MIN.(SEE PLANS)

REV:09.07 — WATER MAIN TRENCH DETAILS — D-8

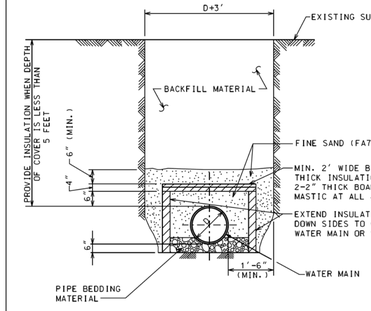

NOTES:

1. INSULATION BOARD TO BE CLOSED CELL, EXTRUDED POLYSTYRENE FOAM MEETING ASTM 578, TYPE VI, 40 PSI COMPRESSING STRENGTH (ASTM D1621) 0.1% MAX. WATER ABSORPTION (ASTM C272).
2. BACKFILL MATERIAL AROUND INSULATION MUST BE FINE SAND FREE FROM ROOTS, ORGANIC MATTER, OR OTHER INJURIOUS MATERIALS.
3. OVERLAP ALL INSULATION BOARD JOINTS.

REV:04.07 — WATER MAIN TRENCH INSULATION DETAIL — D-9

DESIGN BY:										
DRAWN BY:										
CHECKED BY:										
APPROVED BY:		4	7/3/2023	ISSUED FOR BID						
CDOT/APPROVED BY:		NO.	DATE	REVISIONS	DES.	DRW.	CHK.	DCCO	CDOT	

TranSystems
TRANSYSTEMS
222 SOUTH RIVERSIDE PLAZA SUITE 610
CHICAGO, ILLINOIS 60606

SOM
SKIDMORE, OWINGS & MERRILL LLP
224 SOUTH MICHIGAN AVENUE, SUITE 1000
CHICAGO, ILLINOIS 60604

MICHAEL J. LEY
062-055367
LICENSED
PROFESSIONAL
ENGINEER
ILLINOIS

CDOT
CHICAGO DEPARTMENT
OF TRANSPORTATION
DIVISION OF ENGINEERING

STATE / LAKE LOOP ELEVATED STATION
200 NORTH STATE STREET, CHICAGO, IL 60601

WATER MAIN DETAILS

CDOT PROJECT D-1-209

DATE: 7/3/2023

SPEC. NO.

DRAWING NO.
C-644

REVISION NO.

CDWM STANDARD DETAILS

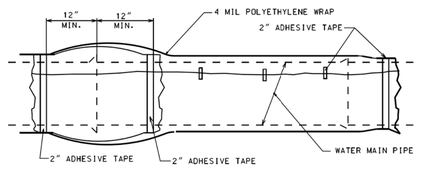

CHART "A" POLYWRAP FLAT TUBE WIDTHS		
PIPE DIAMETER (IN.)	D.I.P. WITH PUSH-ON JOINTS (IN.)	D.I.P. WITH MECHANICAL JOINTS (IN.)
4	14	16
6	17	20
8	21	24
12	29	30
16	37	37
24	53	53

NOTES:

1. USE ONE LENGTH OF POLYETHYLENE TUBE WRAP FOR EACH LENGTH OF PIPE. OVERLAPPED AT PIPE JOINTS AND FOLD EXCESS OVER TOP OF TUBE FOR SLACK REDUCTION.
2. USE CHART "A" TO SELECT SIZE OF WRAP.

REV:04.07

WATER MAIN
POLYETHYLENE WRAP DETAIL

D-10

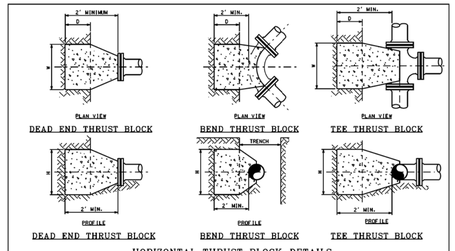

TABLE 1

PIPE SIZE	DEAD END & TEE				HORIZONTAL 1/8 BEND				HORIZONTAL 1/4 BEND			
INCH DIA.	D	H	W	CY	D	H	W	CY	D	H	W	CY
16	1	3.5	4.5	2	1	4	4	1.5	1	4.5	4	1.5
12	1	3.5	3.5	1	1	4	4	1.5	1	3	3	.75
8	.5	2.5	2.5	.5	.5	3	3	.5	.5	2	2	.5

PIPE SIZE	HORIZONTAL 1/16 BEND				HORIZONTAL 1/32 BEND			
INCH DIA.	D	H	W	CY	D	H	W	CY
16	1	3.5	3.5	1	1	2.5	2.5	.6
12	1	2.5	2.5	.5	1	2	2	.4
8	.5	1.5	1.5	.25	.5	1.5	1.5	.25

TABLE 2

PIPE SIZE	VERTICAL 1/8 BEND				VERTICAL 1/4 BEND BOTTOM			
INCH DIA.	D	H	W	CY	D	H	W	CY
16	7	6	11	2	4.5	4	4	2.25
12	5	6	5	1	2	3	3	1
8	4.5	4	4	1.5	2	2	2	1.5

D IS THE DIMENSION INTO UNDISTURBED GROUND IN FEET
H IS HEIGHT OF THRUST BLOCK IN FEET
W IS WIDTH OF THRUST BLOCK IN FEET
ALL DIMENSIONS ARE MINIMUM.
THRUST BLOCKS IN LOOSE FILL OR SAND AREAS ARE NOT INCLUDED IN THESE TABLES AND WILL REQUIRE ADDITIONAL ANALYSIS.

NOTES:

1. FULL CONCRETE THRUST BLOCKS AS SHOWN ARE REQUIRED WHEN THRUST RESTRAIN IS NOT PROVIDED BY OTHER MEANS SUCH AS RESTRAINED JOINT PIPE.
2. WHEN THRUST RESTRAINT GLANDS ARE INSTALLED FOR THE CONNECTIONS, CONCRETE THRUST BLOCKS SHALL BE PROVIDED UP TO THE THE DOTTED LINE AS SHOWN.
3. ALL BOLTS, NUTS, THRUST RESTRAINT GLANDS AND FITTINGS SHALL BE WRAPPED WITH POLYETHYLENE TUBING TO PREVENT CORROSION AND CONCRETE ADHESION.
4. CONCRETE FOR THRUST BLOCKS MUST NOT CONTAIN FLY ASH.

REV:04.07

THRUST RESTRAINT
CONCRETE THRUST BLOCK DETAILS

D-11

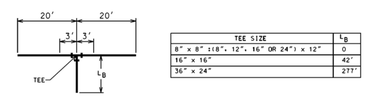

TEE SIZE	L8
8" x 8" (8", 12", 16" OR 24") x 12"	0
16" x 16"	42'
36" x 24"	277'

HORIZONTAL TEES - LENGTH OF RESTRAINED JOINTS

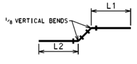

PIPE SIZE	L1	L2
8"	26'	26'
12"	37'	11'
16"	67'	20'
24"	67'	20'

1/8 VERTICAL BENDS - LENGTH OF RESTRAINED JOINTS

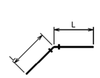

PIPE SIZE	DISTANCE OF RESTRAINED JOINTS REQUIRED EITHER SIDE OF BENDS L			
	BEND SIZES			
	1/16	1/8	1/4	1/2
8"	3'	6'	12'	29'
12"	4'	8'	17'	41'
16"	7'	15'	30'	73'
24"	7'	15'	30'	73'

HORIZONTAL BENDS - LENGTH OF RESTRAINED JOINTS

NOTE:
1. MINIMUM LENGTHS OF PIPE REQUIRED TO RESTRAIN FITTINGS SHOWN.
2. LENGTHS BASED ON POLY-WRAPPED PIPE.

REV:04.07

THRUST RESTRAINT
RESTRAINED JOINT PIPE DETAILS

D-12

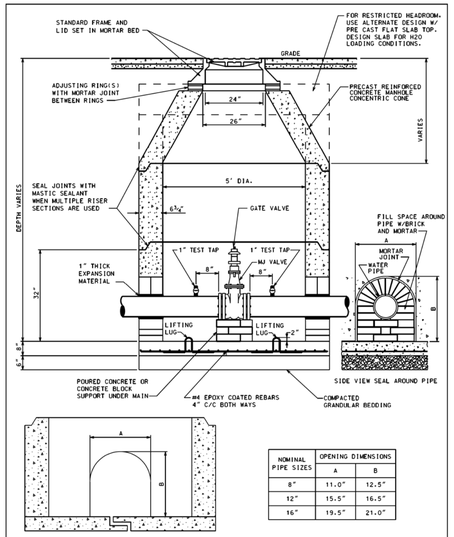

NOMINAL PIPE SIZES	OPENING DIMENSIONS	
	A	B
8"	11.0"	12.5"
12"	15.5"	16.5"
16"	19.5"	21.0"

REV:06.07

PRECAST VALVE BASIN
FOR PIPES UP TO 16" DIA.

D-13

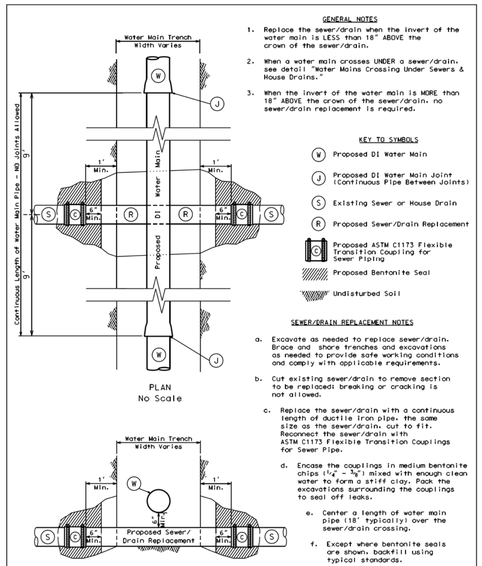

GENERAL NOTES

1. Replace the sewer/drain when the invert of the water main is LESS than 18" ABOVE the crown of the sewer/drain.
2. When a water main crosses UNDER a sewer/drain, see detail "Water Mains Crossing Under Sewers & House Drains."
3. When the invert of the water main is MORE than 18" ABOVE the crown of the sewer/drain, no sewer/drain replacement is required.

KEY TO SYMBOLS

- (W) Proposed DI Water Main
- (J) Proposed DI Water Main Joint (Continuous Pipe Between Joints)
- (S) Existing Sewer or House Drain
- (R) Proposed Sewer/Drain Replacement
- (C) Proposed ASTM C1173 Flexible Transition Coupling for Sewer Piping
- Proposed Bentonite Seal
- Undisturbed Soil

SEWER/DRAIN REPLACEMENT NOTES

a. Excavate as needed to replace sewer/drain. Brace and shore trenches and excavations as needed to provide safe working conditions and comply with applicable requirements.

b. Cut existing sewer/drain to remove section to be replaced; breaking or cracking is not allowed.

c. Replace the sewer/drain with a continuous length of ductile iron pipe, the same size as the sewer/drain, cut to fit. Reconnect the sewer/drain with ASTM C1173 Flexible Transition Couplings for Sewer Pipe.

d. Encase the couplings in medium bentonite chips (1/4" - 3/8") mixed with enough clean water to form a stiff clay. Pack the excavations surrounding the couplings to seal off leaks.

e. Center a length of water main pipe (18' typically) over the sewer/drain crossing.

f. Except where bentonite seals are shown, backfill using typical standards.

g. Comply with IL EPA requirements (modified and approved by IL EPA November 13, 2007).

Rev:11.07

WATER MAINS CROSSING OVER
SEWERS & HOUSE DRAINS

D-19
SHT. 1 OF 2

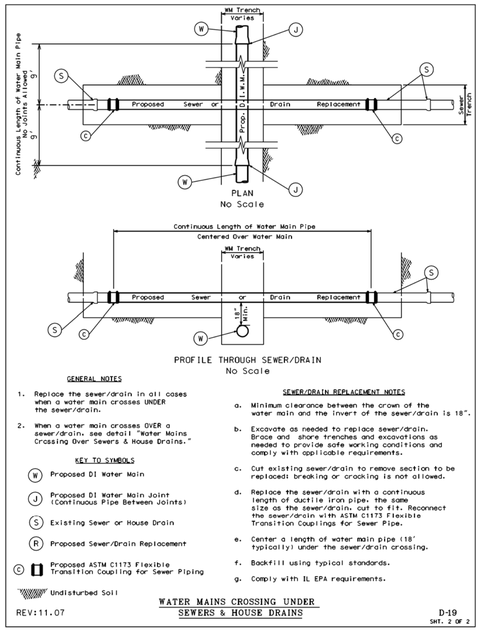

GENERAL NOTES

1. Replace the sewer/drain in all cases when a water main crosses UNDER the sewer/drain.
2. When a water main crosses OVER a sewer/drain, see detail "Water Mains Crossing Over Sewers & House Drains."

KEY TO SYMBOLS

- (W) Proposed DI Water Main
- (J) Proposed DI Water Main Joint (Continuous Pipe Between Joints)
- (S) Existing Sewer or House Drain
- (R) Proposed Sewer/Drain Replacement
- (C) Proposed ASTM C1173 Flexible Transition Coupling for Sewer Piping
- Undisturbed Soil

SEWER/DRAIN REPLACEMENT NOTES

a. Minimum clearance between the crown of the water main and the invert of the sewer/drain is 18".

b. Excavate as needed to replace sewer/drain. Brace and shore trenches and excavations as needed to provide safe working conditions and comply with applicable requirements.

c. Cut existing sewer/drain to remove section to be replaced; breaking or cracking is not allowed.

d. Replace the sewer/drain with a continuous length of ductile iron pipe, the same size as the sewer/drain, cut to fit. Reconnect the sewer/drain with ASTM C1173 Flexible Transition Couplings for Sewer Pipe.

e. Center a length of water main pipe (18' typically) under the sewer/drain crossing.

f. Backfill using typical standards.

g. Comply with IL EPA requirements.

REV:11.07

WATER MAINS CROSSING UNDER
SEWERS & HOUSE DRAINS

D-19
SHT. 2 OF 2

SIZE	A	B	C	D	E	F	G	H
3"	1'-0"	1'-2"	2'-6"	1'-2"	SPOOL PIECE VARIES	1'-0"	8'-0"	6'-0"
4"	1'-0"	1'-2"	2'-6"	1'-2"	SPOOL PIECE VARIES	1'-0"	8'-0"	6'-0"
6"	1'-0"	1'-2"	2'-6"	1'-2"	SPOOL PIECE VARIES	1'-0"	10'-0"	6'-0"
8"	1'-0"	1'-2"	2'-6"	1'-2"	SPOOL PIECE VARIES	1'-0"	10'-0"	6'-0"
12"	1'-0"	1'-2"	2'-6"	1'-2"	SPOOL PIECE VARIES	1'-0"	10'-0"	6'-0"

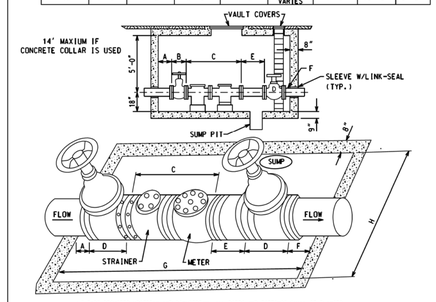

1" TAPS REQUIRED UPSTREAM AND DOWNSTREAM. ALL PIPES AND FITTINGS SHALL BE FLANGED AND SHALL CONFORM TO U.S.A. STANDARD A21.15-1965 (A.W.W.A.C. 151-65) AND SHALL HAVE ON OUTSIDE BITUMINOUS COATING OF EITHER COAL TAR OR ASPHALT BASE AND A CEMENT MORTAR LINING CONFORMING TO U.S.A. STANDARD A21.4-64 (A.W.W.A.C. 104-53).

ALL METER VAULT COVERS AND LIDS SHALL BE HEAVY DUTY, 2 PIECE SHALL BE PLACED DIRECTLY ABOVE THE COMPOUND METER BYPASS. NO CENTER BRACE SHALL BE PERMITTED IN COVER FRAME. VAULT COVER SHALL MEASURE 49"x2" x 31"x2" AND COMPLY TO R6663MP NEENAH OR EQUAL.
FOR METER READER ACCESS A 1'-11" COVER MUST BE INSTALLED IN CORNER OF VAULT ACCESS COVER TO CONFORM TO R1885 NEENAH OR EQUAL. LADDER TO BE DIRECTLY UNDERCOVER.

FOR BLOCK CONSTRUCTION ON IRON RUNG LADDER ANCHORED TO WALL WITH STEPS 16" MAX. ON CENTER. FOR PRE-CAST VAULTS USE CAST IRON STEPS R1980-T. BOLTING TO BE INSTALLED IN VERTICAL AT 16" CENTERS. A SUMP PIT SHALL BE INSTALLED NEAR BUT NOT UNDER LADDER. NO MECHANICAL JOINT FITTING ALLOWED IN VAULT. BLOCK SUMP TO BE LOCATED NEAR ACCESS LADDER. BUT NOT UNDER LADDER. METER AND VAULTS ETC. TO BE CENTERED IN VAULT.

REV:04.07

3", 4", 6", 8" & 12" METER VAULTS

D-25

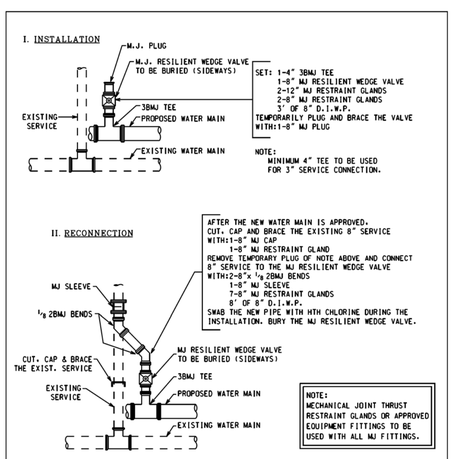

REV:04.07

TYPICAL SERVICE RECONNECTION 3" AND
LARGER USING M.J. RESILIENT WEDGE VALVE

D-30

DESIGN BY:										
DRAWN BY:										
CHECKED BY:										
APPROVED BY:		4	7/3/2023	ISSUED FOR BID						
CDOT/APPROVED BY:		NO.	DATE	REVISIONS	DES.	DRW.	CHK.	DCCO	CDOT	

TRANSYSTEMS
222 SOUTH RIVERSIDE PLAZA SUITE 610
CHICAGO, ILLINOIS 60606

SKIDMORE, OWINGS & MERRILL LLP
224 SOUTH MICHIGAN AVENUE, SUITE 1000
CHICAGO, ILLINOIS 60604

MICHAEL J. LEY
062-055367
LICENSED PROFESSIONAL ENGINEER
ILLINOIS

CHICAGO DEPARTMENT OF TRANSPORTATION
DIVISION OF ENGINEERING

STATE / LAKE LOOP ELEVATED STATION
200 NORTH STATE STREET, CHICAGO, IL 60601

WATER MAIN DETAILS

CDOT PROJECT D-1-209

DATE: 7/3/2023

SPEC. NO.

DRAWING NO. C-645

REVISION NO.

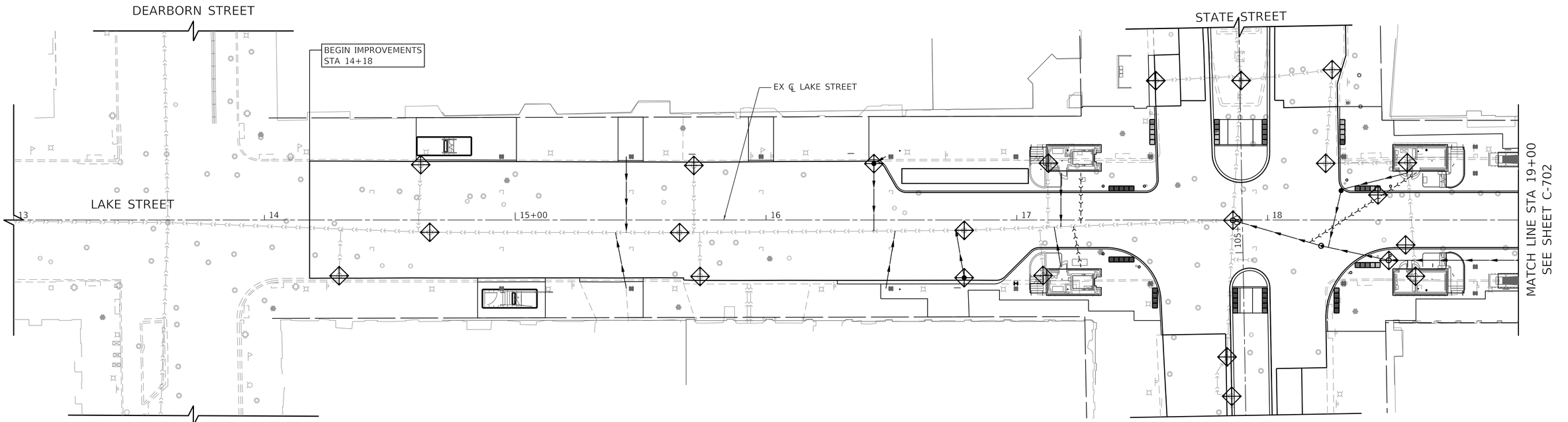

LEGEND

INLET FILTER/
INLET & PIPE PROTECTION

NOTES

1. INLET FILTERS ARE TO BE INSTALLED IN CATCH BASINS, INLETS, AND DRAINAGE STRUCTURES THAT ARE ADJACENT TO THE CONSTRUCTION AREA AND WITHIN THE RIGHT OF WAY PER IDOT SPEC. 280.04 (c).
2. EROSION CONTROL MEASURES ARE TEMPORARY AND MUST BE REMOVED AS REQUIRED BY THE COMMISSIONER.
3. FOR EROSION CONTROL DETAILS, SEE C-731.

N

0 20 40 60
SCALE IN FEET

DESIGN BY:										
DRAWN BY:										
CHECKED BY:										
APPROVED BY:		4	7/3/2023	ISSUED FOR BID	EAD	EAD	MJL			
CDOT/APPROVED BY:		NO.	DATE	REVISIONS	DES.	DRW.	CHK.	DCCO	CDOT	

TRANSYSTEMS
222 SOUTH RIVERSIDE PLAZA SUITE 610
CHICAGO, ILLINOIS 60606

SKIDMORE, OWINGS & MERRILL LLP
224 SOUTH MICHIGAN AVENUE, SUITE 1000
CHICAGO, ILLINOIS 60604

MICHAEL J. LEV
062-055367
LICENSED PROFESSIONAL ENGINEER
ILLINOIS

CHICAGO DEPARTMENT OF TRANSPORTATION
DIVISION OF ENGINEERING

STATE / LAKE LOOP ELEVATED STATION
200 NORTH STATE STREET, CHICAGO, IL 60601

EROSION AND SEDIMENT CONTROL PLAN
LAKE STREET

CDOT PROJECT D-1-209 | DATE: 7/3/2023

SPEC. NO.

DRAWING NO.
C-701

REVISION NO.

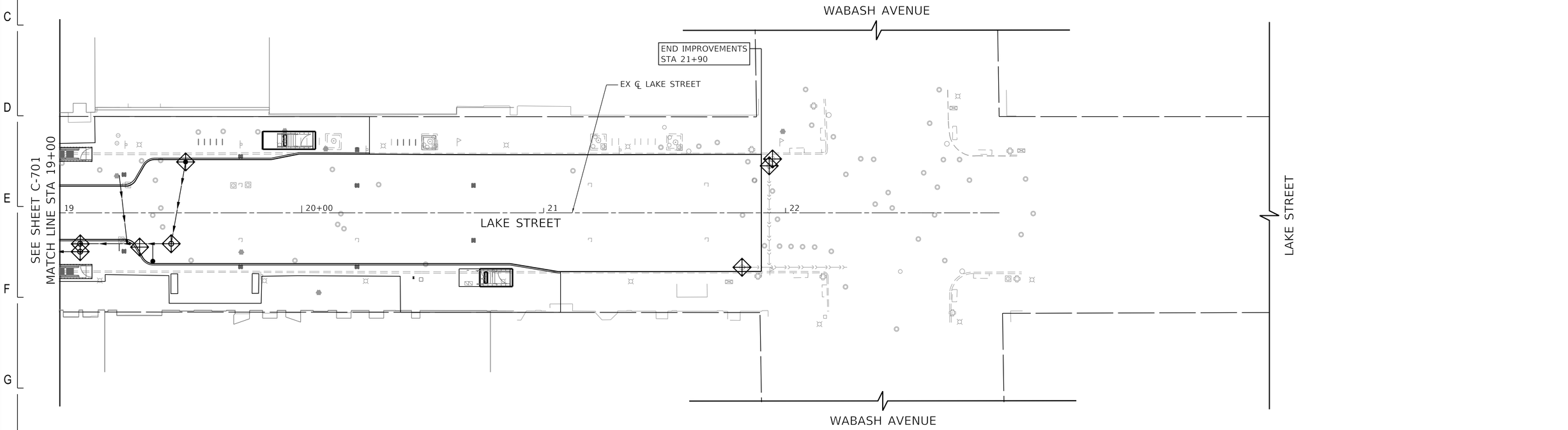

LEGEND

INLET FILTER/
INLET & PIPE PROTECTION

NOTES

1. INLET FILTERS ARE TO BE INSTALLED IN CATCH BASINS, INLETS, AND DRAINAGE STRUCTURES THAT ARE ADJACENT TO THE CONSTRUCTION AREA AND WITHIN THE RIGHT OF WAY PER IDOT SPEC. 280.04 (c).
2. EROSION CONTROL MEASURES ARE TEMPORARY AND MUST BE REMOVED AS REQUIRED BY THE COMMISSIONER.
3. FOR EROSION CONTROL DETAILS, SEE C-731.

N

0 20 40 60
SCALE IN FEET

DESIGN BY:									
DRAWN BY:									
CHECKED BY:									
APPROVED BY:		4	7/3/2023	ISSUED FOR BID					
CDOT/APPROVED BY:		NO.	DATE	REVISIONS	DES.	DRW.	CHK.	DCCO	CDOT

TRANSYSTEMS
222 SOUTH RIVERSIDE PLAZA SUITE 610
CHICAGO, ILLINOIS 60606

SKIDMORE, OWINGS & MERRILL LLP
224 SOUTH MICHIGAN AVENUE, SUITE 1000
CHICAGO, ILLINOIS 60604

MICHAEL J. LEV
062-055367
LICENSED PROFESSIONAL ENGINEER
OF ILLINOIS

CHICAGO DEPARTMENT OF TRANSPORTATION
DIVISION OF ENGINEERING

STATE / LAKE LOOP ELEVATED STATION
200 NORTH STATE STREET, CHICAGO, IL 60601

SPEC. NO.

EROSION AND SEDIMENT CONTROL PLAN
LAKE STREET

DRAWING NO.
C-702

CDOT PROJECT D-1-209

DATE: 7/3/2023

REVISION NO.

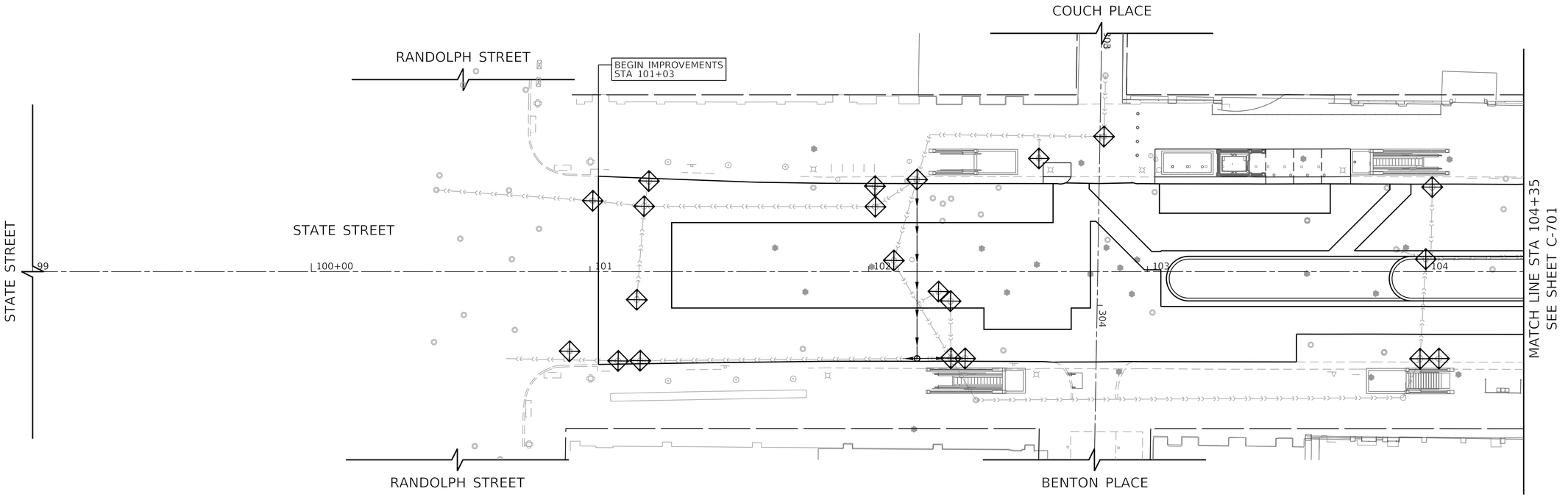

LEGEND

INLET FILTER/
INLET & PIPE PROTECTION

NOTES

1. INLET FILTERS ARE TO BE INSTALLED IN CATCH BASINS, INLETS, AND DRAINAGE STRUCTURES THAT ARE ADJACENT TO THE CONSTRUCTION AREA AND WITHIN THE RIGHT OF WAY PER IDOT SPEC. 280.04 (c).
2. EROSION CONTROL MEASURES ARE TEMPORARY AND MUST BE REMOVED AS REQUIRED BY THE COMMISSIONER.
3. FOR EROSION CONTROL DETAILS, SEE C-731.

N

0 20 40 60
SCALE IN FEET

DESIGN BY:										
DRAWN BY:										
CHECKED BY:										
APPROVED BY:		4	7/3/2023	ISSUED FOR BID	AMK	AMK	ZMZ		
CDOT/APPROVED BY:		NO.	DATE	REVISIONS	DES.	DRW.	CHK.	DCCO	CDOT

TRANSYSTEMS
222 SOUTH RIVERSIDE PLAZA SUITE 610
CHICAGO, ILLINOIS 60606

SKIDMORE, OWINGS & MERRILL LLP
224 SOUTH MICHIGAN AVENUE, SUITE 1000
CHICAGO, ILLINOIS 60604

MICHAEL J. LEV
062-055367
LICENSED PROFESSIONAL ENGINEER
ILLINOIS

CHICAGO DEPARTMENT OF TRANSPORTATION
DIVISION OF ENGINEERING

STATE / LAKE LOOP ELEVATED STATION
200 NORTH STATE STREET, CHICAGO, IL 60601

EROSION AND SEDIMENT CONTROL PLAN
STATE STREET

CDOT PROJECT D-1-209

DATE: 7/3/2023

SPEC. NO.

DRAWING NO.
C-703

REVISION NO.

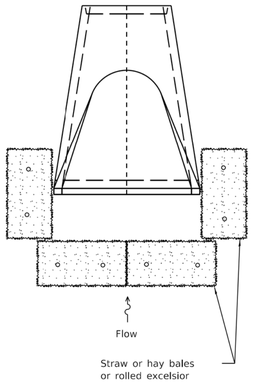

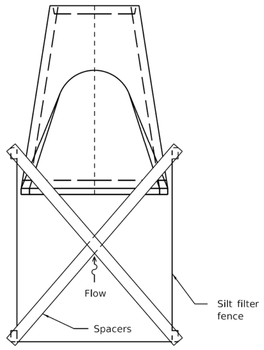

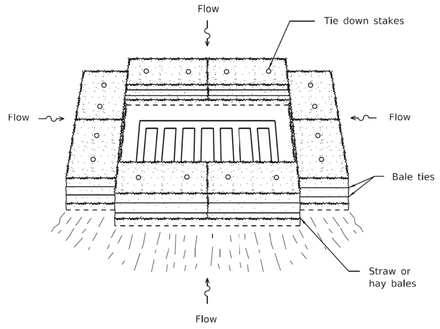

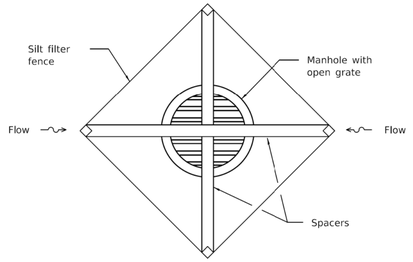

INLET AND PIPE PROTECTION

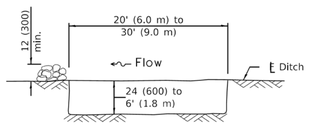

The performance of the basin will improve if put into a series.

ELEVATION

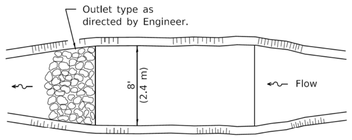

The long dimension should be parallel with the direction of the flow. Accumulated silt shall be removed anytime the basins become 75% filled.

PLAN

SEDIMENT BASIN

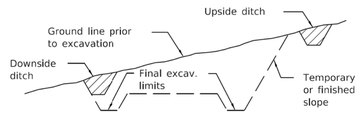

TYPICAL CUT CROSS-SECTION

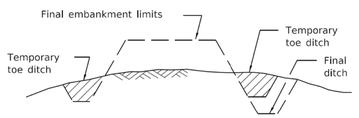

TYPICAL FILL CROSS-SECTION

TEMPORARY DITCHES FOR CUT & FILL SECTIONS

Illinois Department of Transportation

PASSED January 1, 2013
Michael Brand
ENGINEER OF POLICY AND PROCEDURES
APPROVED January 1, 2013
ENGINEER OF DESIGN AND ENVIRONMENT

ISSUED 1-1-97

TEMPORARY EROSION CONTROL SYSTEMS

(Sheet 2 of 2)

STANDARD 280001-07

INLET PROTECTION - PAVED AREAS
DROP-IN PROTECTION

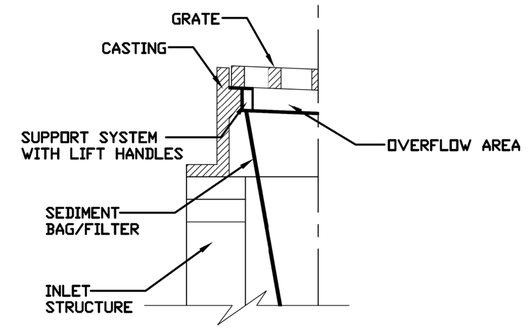

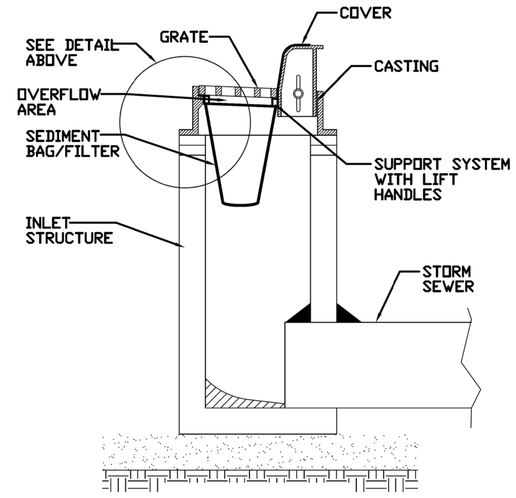

REFERENCE
Project
Designed Date
Checked Date
Approved Date

STANDARD DWG. NO.
IUM-561D
SHEET 1 OF 1
DATE 01-11-11

DESIGN BY:										
DRAWN BY:										
CHECKED BY:										
APPROVED BY:		4	7/3/2023	ISSUED FOR BID						
CDOT/APPROVED BY:		NO.	DATE	REVISIONS	DES.	DRW.	CHK.	DCCO	CDOT	

TRANSYSTEMS
222 SOUTH RIVERSIDE PLAZA SUITE 610
CHICAGO, ILLINOIS 60606

SKIDMORE, OWINGS & MERRILL LLP
224 SOUTH MICHIGAN AVENUE, SUITE 1000
CHICAGO, ILLINOIS 60604

MICHAEL J. LEV
062-055367
LICENSED PROFESSIONAL ENGINEER
OF ILLINOIS

CHICAGO DEPARTMENT OF TRANSPORTATION
DIVISION OF ENGINEERING

STATE / LAKE LOOP ELEVATED STATION
200 NORTH STATE STREET, CHICAGO, IL 60601

SPEC. NO.

EROSION CONTROL DETAIL

DRAWING NO.
C-731

CDOT PROJECT D-1-209 | DATE: 7/3/2023 | REVISION NO.

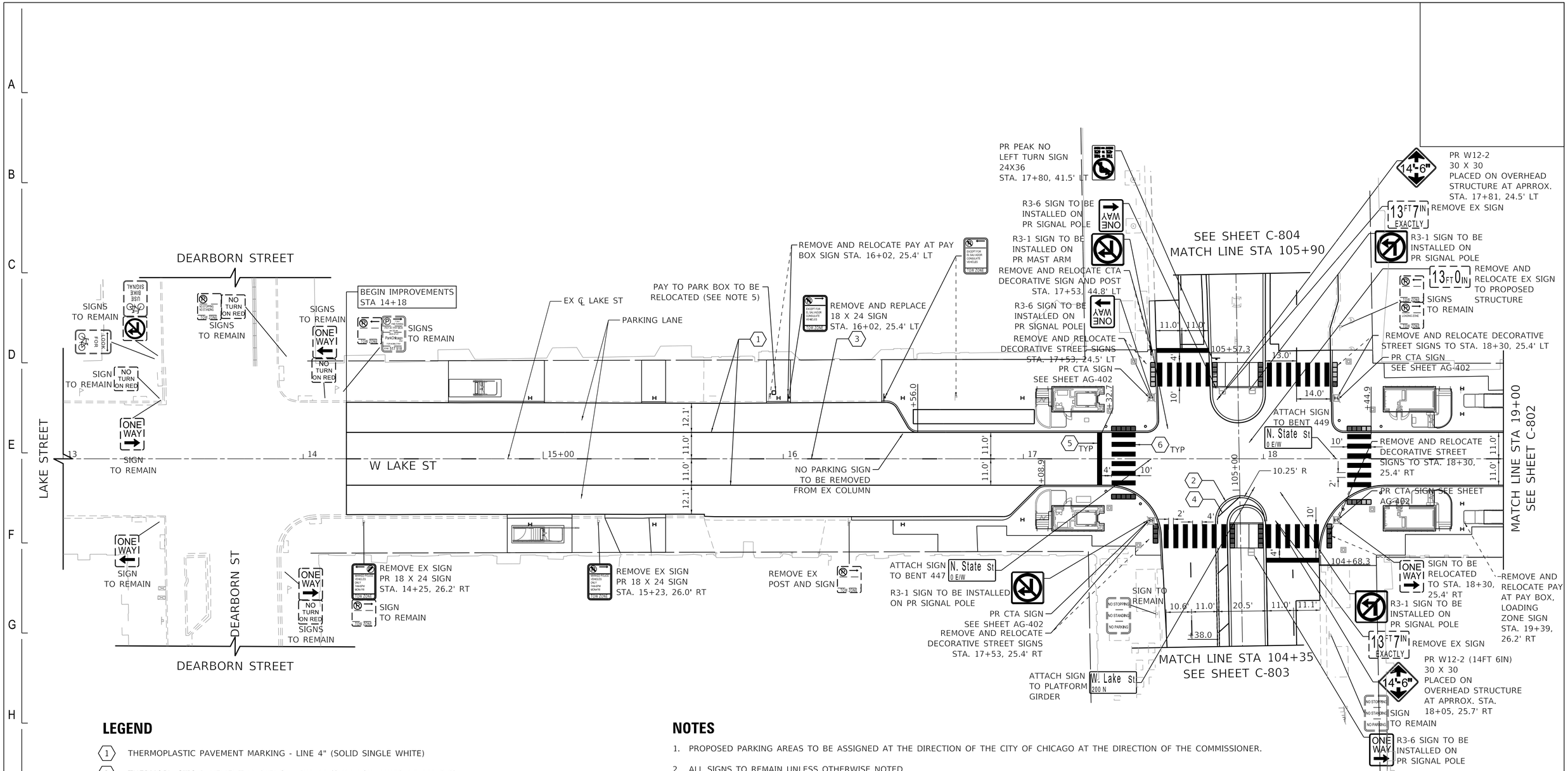

LEGEND

1. THERMOPLASTIC PAVEMENT MARKING - LINE 4" (SOLID SINGLE WHITE)
2. THERMOPLASTIC PAVEMENT MARKING - LINE 4" (2 YELLOW LINES AT 11" C-C)
3. THERMOPLASTIC PAVEMENT MARKING - LINE 4" (DASHED SINGLE WHITE, 6' DASH, 18' SKIP)
4. THERMOPLASTIC PAVEMENT MARKING - LINE 12" (YELLOW DIAGONALS AT 20' SPACING)
5. THERMOPLASTIC PAVEMENT MARKING - LINE 24" (SOLID SINGLE WHITE)
6. THERMOPLASTIC PAVEMENT MARKING - CONTINENTAL CROSSWALK (SOLID, WHITE) 2' SPACED 4' C-C (TYP)
7. THERMOPLASTIC PAVEMENT MARKING - LINE 4" (SOLID SINGLE YELLOW)

NOTES

1. PROPOSED PARKING AREAS TO BE ASSIGNED AT THE DIRECTION OF THE CITY OF CHICAGO AT THE DIRECTION OF THE COMMISSIONER.
2. ALL SIGNS TO REMAIN UNLESS OTHERWISE NOTED.
3. ALL SIGNS DESIGNATED FOR REMOVAL SHALL BE DELIVERED TO THE CITY OF CHICAGO AT THE DIRECTION OF THE COMMISSIONER.
4. PROPOSED LOADING/VALET/PARKING ZONES ARE AT THE DIRECTION OF CDOT.
5. CONTRACTOR MUST COORDINATE REMOVAL AND REINSTALLATION OF PARKING PAY BOXES WITH PAY BOX OWNER, CHICAGO PARKING METERS, LLC. CONTRACTOR MUST PROTECT PAY BOX DURING CONSTRUCTION IF NOT REMOVED BY OWNER.

DESIGN BY:										
DRAWN BY:										
CHECKED BY:										
APPROVED BY:		4	7/3/2023	ISSUED FOR BID	AMK	AMK	ZMZ			
CDOT/APPROVED BY:		NO.	DATE	REVISIONS	DES.	DRW.	CHK.	DCCO	CDOT	

TRANSYSTEMS
222 SOUTH RIVERSIDE PLAZA SUITE 610
CHICAGO, ILLINOIS 60606

SKIDMORE, OWINGS & MERRILL LLP
224 SOUTH MICHIGAN AVENUE, SUITE 1000
CHICAGO, ILLINOIS 60604

MICHAEL J. LEV
062-055367
LICENSED PROFESSIONAL ENGINEER
ILLINOIS

CHICAGO DEPARTMENT OF TRANSPORTATION
DIVISION OF ENGINEERING

STATE / LAKE LOOP ELEVATED STATION
200 NORTH STATE STREET, CHICAGO, IL 60601

SPEC. NO.

PROPOSED SIGNAGE AND PAVEMENT MARKING
LAKE STREET

DRAWING NO.
C-801

CDOT PROJECT D-1-209 | DATE: 7/3/2023 | REVISION NO.

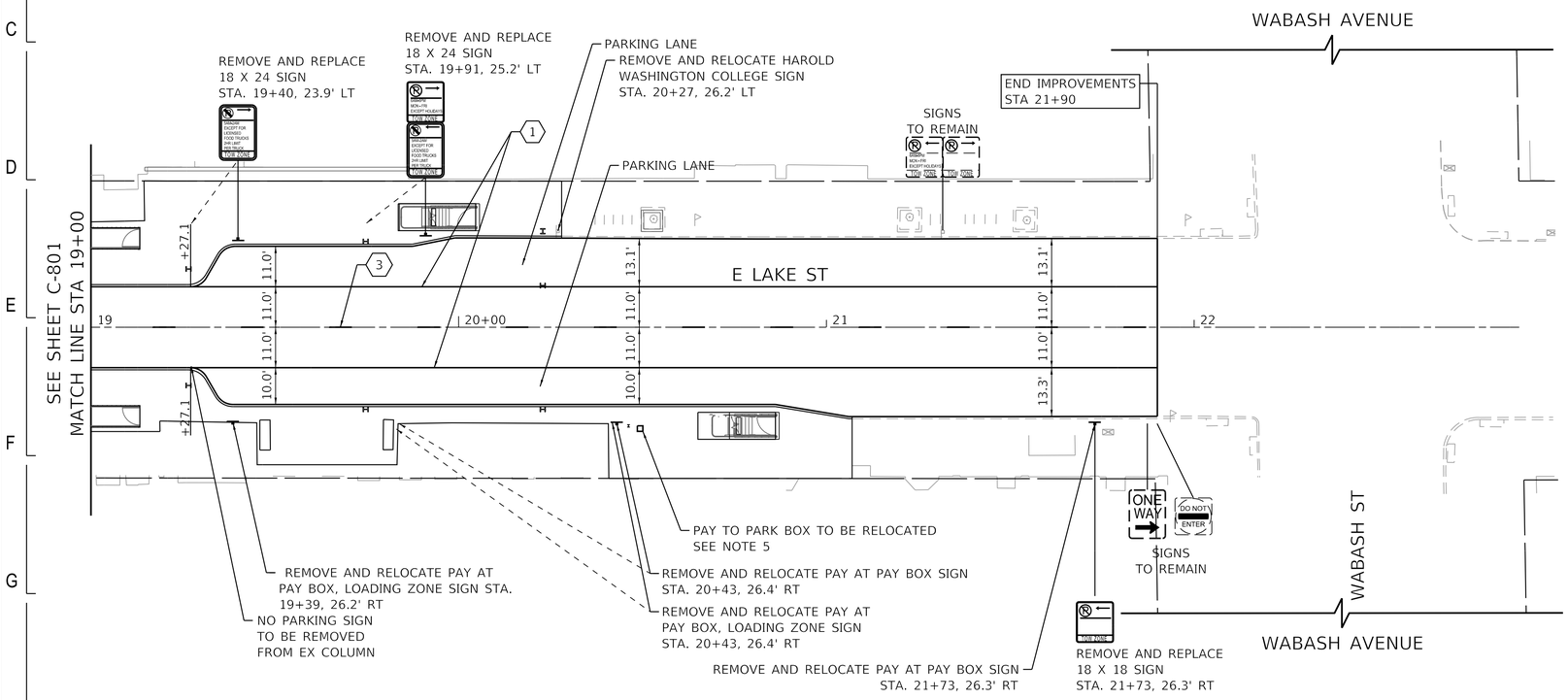

LEGEND

1. THERMOPLASTIC PAVEMENT MARKING - LINE 4" (SOLID SINGLE WHITE)
2. THERMOPLASTIC PAVEMENT MARKING - LINE 4" (2 YELLOW LINES AT 11" C-C)
3. THERMOPLASTIC PAVEMENT MARKING - LINE 4" (DASHED SINGLE WHITE, 6' DASH, 18' SKIP)
4. THERMOPLASTIC PAVEMENT MARKING - LINE 12" (YELLOW DIAGONALS AT 20' SPACING)
5. THERMOPLASTIC PAVEMENT MARKING - LINE 24" (SOLID SINGLE WHITE)
6. THERMOPLASTIC PAVEMENT MARKING - CONTINENTAL CROSSWALK (SOLID, WHITE) 2' SPACED 4' C-C (TYP)
7. THERMOPLASTIC PAVEMENT MARKING - LINE 4" (SOLID SINGLE YELLOW)

NOTES

1. PROPOSED PARKING AREAS TO BE ASSIGNED AT THE DIRECTION OF THE CITY OF CHICAGO AT THE DIRECTION OF THE COMMISSIONER.
2. ALL SIGNS TO REMAIN UNLESS OTHERWISE NOTED.
3. ALL SIGNS DESIGNATED FOR REMOVAL SHALL BE DELIVERED TO THE CITY OF CHICAGO AT THE DIRECTION OF THE COMMISSIONER.
4. PROPOSED LOADING/VALET/PARKING ZONES ARE AT THE DIRECTION OF CDOT.
5. CONTRACTOR MUST COORDINATE REMOVAL AND REINSTALLATION OF PARKING PAY BOXES WITH PAY BOX OWNER, CHICAGO PARKING METERS, LLC. CONTRACTOR MUST PROTECT PAY BOX DURING CONSTRUCTION IF NOT REMOVED BY OWNER.

N

0 20 40 60
SCALE IN FEET

DESIGN BY:									
DRAWN BY:									
CHECKED BY:									
APPROVED BY:		4	7/3/2023	ISSUED FOR BID	AMK	AMK	ZMZ		
CDOT/APPROVED BY:		NO.	DATE	REVISIONS	DES.	DRW.	CHK.	DCCO	CDOT

TRANSYSTEMS
222 SOUTH RIVERSIDE PLAZA SUITE 610
CHICAGO, ILLINOIS 60606

SKIDMORE, OWINGS & MERRILL LLP
224 SOUTH MICHIGAN AVENUE, SUITE 1000
CHICAGO, ILLINOIS 60604

MICHAEL J. LEY
062-055367
LICENSED PROFESSIONAL ENGINEER
ILLINOIS

CHICAGO DEPARTMENT OF TRANSPORTATION
DIVISION OF ENGINEERING

STATE / LAKE LOOP ELEVATED STATION
200 NORTH STATE STREET, CHICAGO, IL 60601

PROPOSED SIGNAGE AND PAVEMENT MARKING
LAKE STREET

CDOT PROJECT D-1-209 | DATE: 7/3/2023

SPEC. NO.

DRAWING NO.
C-802

REVISION NO.

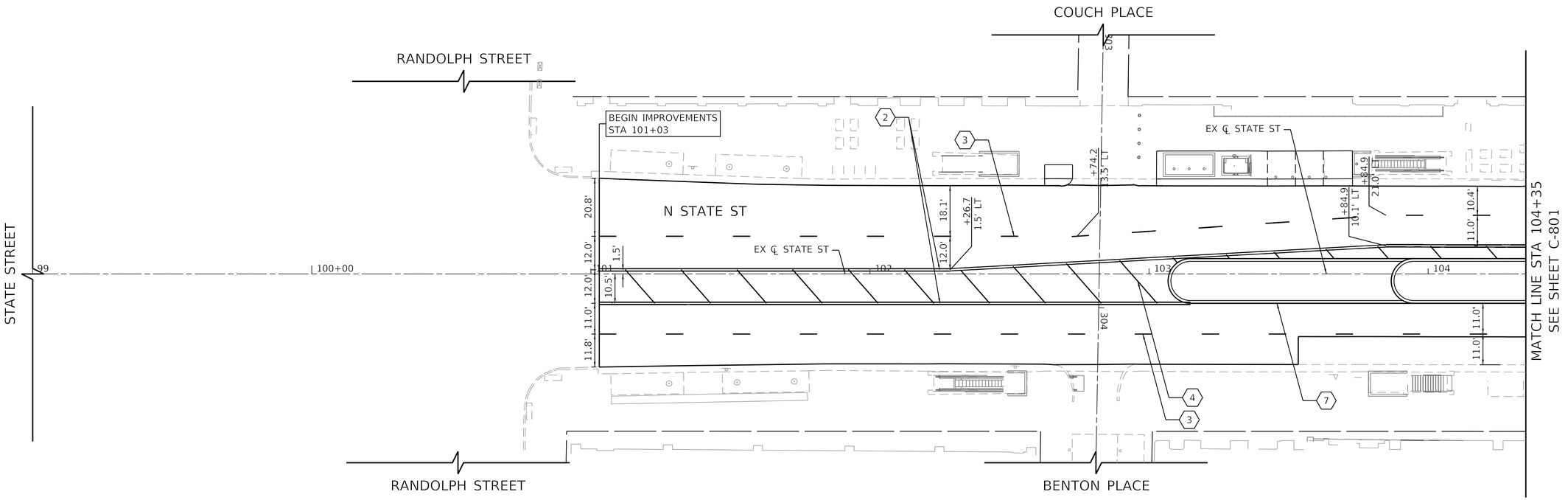

LEGEND

1. THERMOPLASTIC PAVEMENT MARKING - LINE 4" (SOLID SINGLE WHITE)
2. THERMOPLASTIC PAVEMENT MARKING - LINE 4" (2 YELLOW LINES AT 11" C-C)
3. THERMOPLASTIC PAVEMENT MARKING - LINE 4" (DASHED SINGLE WHITE, 6' DASH, 18' SKIP)
4. THERMOPLASTIC PAVEMENT MARKING - LINE 12" (YELLOW DIAGONALS AT 20' SPACING)
5. THERMOPLASTIC PAVEMENT MARKING - LINE 24" (SOLID SINGLE WHITE)
6. THERMOPLASTIC PAVEMENT MARKING - CONTINENTAL CROSSWALK (SOLID, WHITE) 2' SPACED 4' C-C (TYP)
7. THERMOPLASTIC PAVEMENT MARKING - LINE 4" (SOLID SINGLE YELLOW)

NOTES

1. PROPOSED PARKING AREAS TO BE ASSIGNED AT THE DIRECTION OF THE CITY OF CHICAGO AT THE DIRECTION OF THE COMMISSIONER.
2. ALL SIGNS TO REMAIN UNLESS OTHERWISE NOTED.
3. ALL SIGNS DESIGNATED FOR REMOVAL SHALL BE DELIVERED TO THE CITY OF CHICAGO AT THE DIRECTION OF THE COMMISSIONER.
4. PROPOSED LOADING/VALET/PARKING ZONES ARE AT THE DIRECTION OF CDOT.
5. CONTRACTOR MUST COORDINATE REMOVAL AND REINSTALLATION OF PARKING PAY BOXES WITH PAY BOX OWNER, CHICAGO PARKING METERS, LLC. CONTRACTOR MUST PROTECT PAY BOX DURING CONSTRUCTION IF NOT REMOVED BY OWNER.

N

0 20 40 60
SCALE IN FEET

DESIGN BY:										
DRAWN BY:										
CHECKED BY:										
APPROVED BY:		4	7/3/2023	ISSUED FOR BID	AMK	AMK	ZMZ		
CDOT/APPROVED BY:		NO.	DATE	REVISIONS	DES.	DRW.	CHK.	DCCO	CDOT

TRANSYSTEMS
222 SOUTH RIVERSIDE PLAZA SUITE 610
CHICAGO, ILLINOIS 60606

SKIDMORE, OWINGS & MERRILL LLP
224 SOUTH MICHIGAN AVENUE, SUITE 1000
CHICAGO, ILLINOIS 60604

MICHAEL J. LEV
062-055367
LICENSED PROFESSIONAL ENGINEER
ILLINOIS

CHICAGO DEPARTMENT OF TRANSPORTATION
DIVISION OF ENGINEERING

STATE / LAKE LOOP ELEVATED STATION
200 NORTH STATE STREET, CHICAGO, IL 60601

SPEC. NO.

PROPOSED SIGNAGE AND PAVEMENT MARKING
STATE STREET

DRAWING NO.
C-803

CDOT PROJECT D-1-209

DATE: 7/3/2023

REVISION NO.

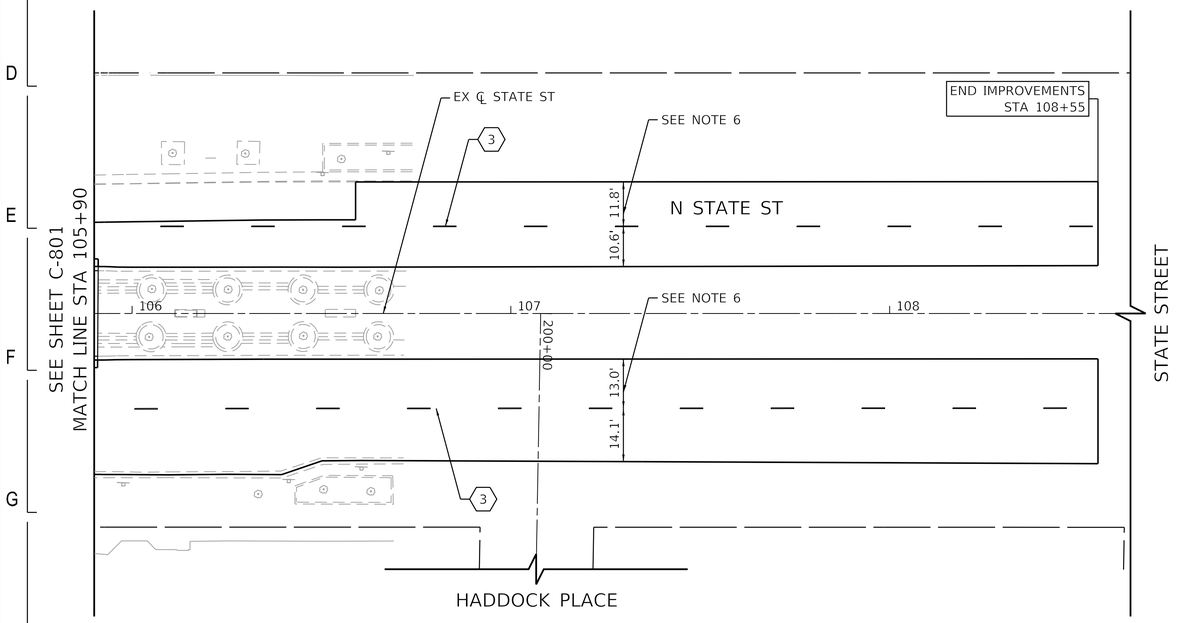

LEGEND

1. THERMOPLASTIC PAVEMENT MARKING - LINE 4" (SOLID SINGLE WHITE)
2. THERMOPLASTIC PAVEMENT MARKING - LINE 4" (2 YELLOW LINES AT 11" C-C)
3. THERMOPLASTIC PAVEMENT MARKING - LINE 4" (DASHED SINGLE WHITE, 6' DASH, 18' SKIP)
4. THERMOPLASTIC PAVEMENT MARKING - LINE 12" (YELLOW DIAGONALS AT 20' SPACING)
5. THERMOPLASTIC PAVEMENT MARKING - LINE 24" (SOLID SINGLE WHITE)
6. THERMOPLASTIC PAVEMENT MARKING - CONTINENTAL CROSSWALK (SOLID, WHITE) 2' SPACED 4' C-C (TYP)
7. THERMOPLASTIC PAVEMENT MARKING - LINE 4" (SOLID SINGLE YELLOW)

NOTES

1. PROPOSED PARKING AREAS TO BE ASSIGNED AT THE DIRECTION OF THE CITY OF CHICAGO AT THE DIRECTION OF THE COMMISSIONER.
2. ALL SIGNS TO REMAIN UNLESS OTHERWISE NOTED.
3. ALL SIGNS DESIGNATED FOR REMOVAL SHALL BE DELIVERED TO THE CITY OF CHICAGO AT THE DIRECTION OF THE COMMISSIONER.
4. PROPOSED LOADING/VALET/PARKING ZONES ARE AT THE DIRECTION OF CDOT.
5. CONTRACTOR MUST COORDINATE REMOVAL AND REINSTALLATION OF PARKING PAY BOXES WITH PAY BOX OWNER, CHICAGO PARKING METERS, LLC. CONTRACTOR MUST PROTECT PAY BOX DURING CONSTRUCTION IF NOT REMOVED BY OWNER.
6. CONTRACTOR TO VERIFY DIMENSIONS IN FIELD.

N

0 20 40 60
SCALE IN FEET

DESIGN BY:										
DRAWN BY:										
CHECKED BY:										
APPROVED BY:		4	7/3/2023	ISSUED FOR BID	AMK	AMK	ZMZ		
CDOT/APPROVED BY:		NO.	DATE	REVISIONS	DES.	DRW.	CHK.	DCCO	CDOT

TranSystems
TRANSYSTEMS
222 SOUTH RIVERSIDE PLAZA SUITE 610
CHICAGO, ILLINOIS 60606

SOM
SKIDMORE, OWINGS & MERRILL LLP
224 SOUTH MICHIGAN AVENUE, SUITE 1000
CHICAGO, ILLINOIS 60604

MICHAEL J. LEV
062-055367
LICENSED PROFESSIONAL ENGINEER
ILLINOIS

CDOT
CHICAGO DEPARTMENT OF TRANSPORTATION
DIVISION OF ENGINEERING

STATE / LAKE LOOP ELEVATED STATION
200 NORTH STATE STREET, CHICAGO, IL 60601

PROPOSED SIGNAGE AND PAVEMENT MARKING
STATE STREET

CDOT PROJECT D-1-209

DATE: 7/3/2023

SPEC. NO.

DRAWING NO.
C-804

REVISION NO.

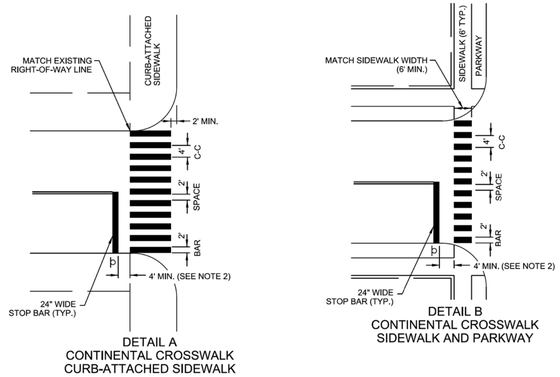

DETAIL A
CONTINENTAL CROSSWALK
CURB-ATTACHED SIDEWALK

DETAIL B
CONTINENTAL CROSSWALK
SIDEWALK AND PARKWAY

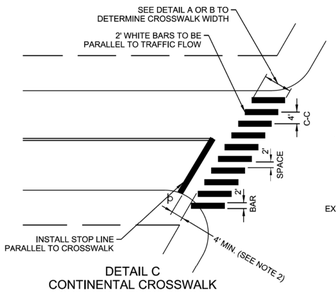

DETAIL C
CONTINENTAL CROSSWALK
SKEWED INTERSECTION

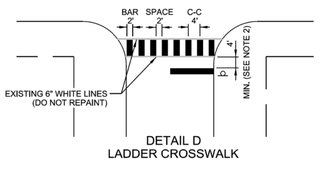

DETAIL D
LADDER CROSSWALK

PAGE 1 OF 2

	DATE	REVISION	CITY OF CHICAGO		
CDOT CHICAGO DEPARTMENT OF TRANSPORTATION	1/1/2014	REVISION 1	CROSSWALK MARKING DETAIL		
			DATE	SHEET	DRAWN BY
			06/25/12	A-7-1A	CDOT

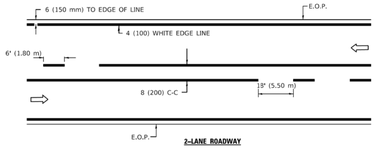

2-LANE ROADWAY

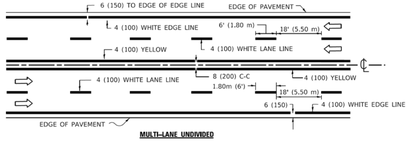

MULTI-LANE UNDIVIDED

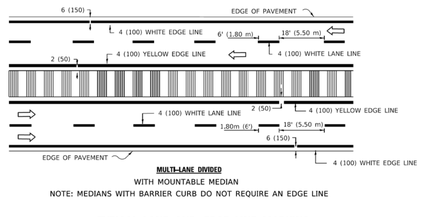

MULTI-LANE DIVIDED
WITH MOUNTABLE MEDIAN

NOTE: MEDIANS WITH BARRIER CURB DO NOT REQUIRE AN EDGE LINE

TYPICAL LANE AND EDGE LINE MARKING

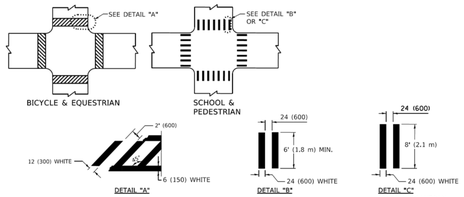

TYPICAL CROSSWALK MARKING

∗ FOR MEDIAN LENGTHS WHERE DIAGONAL SPACING CANNOT BE ATTAINED, USE 5 (FIVE) EQUALLY SPACED DIAGONAL LINES.

∗ DIAGONAL LINE SPACING: 20' (6.1 m) C-C

PAINTED MEDIANS

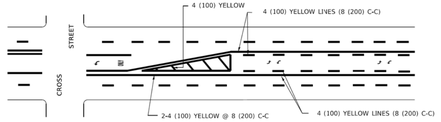

A MINIMUM OF TWO PAIRS OF TURN ARROWS SHALL BE USED, WHITE IN COLOR. ADDITIONAL PAIRS SHALL BE PLACED AT 200' (60 m) TO 300' (90 m) INTERVALS.

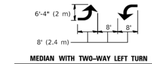

MEDIAN WITH TWO-WAY LEFT TURN LANE

TYPICAL PAINTED MEDIAN MARKING

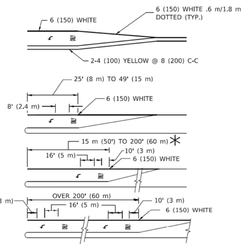

FULL SIZE LETTERS 8' (2.4 m) AND ARROWS SHALL BE USED.
↰ AREA = 15.8 SQ. FT. (1.47 m²) ONLY AREA = 22.9 SQ. FT. (2.13 m²)

∗ TURN LANES IN EXCESS OF 400' (120 m) IN LENGTH MAY HAVE AN ADDITIONAL SET OF ARROW - "ONLY" INSTALLED MIDWAY BETWEEN THE OTHER TWO SETS OF ARROW - "ONLY".

TYPICAL LEFT (OR RIGHT) TURN LANE

TYPICAL TURN LANE MARKING

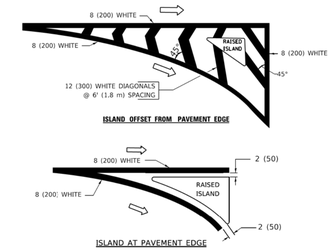

TYPICAL ISLAND MARKING

TYPE OF MARKING	WIDTH OF LINE	PATTERN	COLOR	SPACING / REMARKS
CENTERLINE ON 2 LANE PAVEMENT	4 (100)	SKIP-DASH	YELLOW	6' (1.80 m) LINE WITH 18' (5.50 m) SPACE
CENTERLINE ON MULTI-LANE UNDIVIDED PAVEMENT	2 @ 4 (100)	SOLID	YELLOW	8 (200) C-C
NO PASSING ZONE LINES: FOR ONE DIRECTION FOR BOTH DIRECTIONS	4 (100) 2 @ 4 (100)	SOLID SOLID	YELLOW YELLOW	8 (200) C-C
LANE LINES	4 (100) 5 (125) ON FREEWAYS	SKIP-DASH SKIP-DASH	WHITE WHITE	6' (1.80 m) LINE WITH 18' (5.50 m) SPACE
DOTTED LINES (EXTENSIONS OF CENTER, LANE OR TURN LANE MARKINGS)	SAME AS LINE BEING EXTENDED	SKIP-DASH	SAME AS LINE BEING EXTENDED	2' (600) LINE WITH 6' (1.8) SPACE
EDGE LINES	4 (100)	SOLID	YELLOW-LEFT WHITE-RIGHT	OUTLINE MOUNTABLE MEDIANS IN YELLOW; EDGE LINES ARE NOT USED NEXT TO BARRIER CURB
TURN LANE MARKINGS	6 (150) LINE; FULL SIZE LETTERS & SYMBOLS (8' (2.4 m))	SOLID	WHITE	SEE TYPICAL TURN LANE MARKING DETAIL
TWO WAY LEFT TURN MARKING	2 @ 4 (100) EACH DIRECTION 8' (2.4 m) LEFT ARROW	SKIP-DASH AND SOLID IN PAIRS	YELLOW WHITE	6' (1.8 m) LINE WITH 18' (5.50 m) SPACE FOR SKIP-DASH; 8 (200) C-C BETWEEN SOLID LINE AND SKIP-DASH LINE SEE TYPICAL TWO-WAY LEFT TURN MARKING DETAIL
CROSSWALK LINES A. DIAGONALS (BIKE & EQUESTRIAN) B. LONGITUDINAL BARS (SCHOOL & PEDESTRIAN)	12 (300) @ 45° 24 (600) @ 90°	SOLID SOLID	WHITE WHITE	2' (600) APART 2' (600) APART SEE TYPICAL CROSSWALK MARKING DETAILS.
STOP LINES	24 (600)	SOLID	WHITE	PLACE 4' (1.2 m) IN ADVANCE OF AND PARALLEL TO CROSSWALK, IF PRESENT; OTHERWISE, PLACE AT DESIRED STOPPING POINT, PARALLEL TO CROSSROAD CENTERLINE, WHERE POSSIBLE
PAINTED MEDIANS	2 @ 4 (100) WITH 12 (300) DIAGONALS @ 45°	SOLID	YELLOW: TWO WAY TRAFFIC WHITE: ONE WAY TRAFFIC	8 (200) C-C FOR THE DOUBLE LINE SEE TYPICAL PAINTED MEDIAN MARKING.
GORE MARKING AND CHANNELIZING LINES	8 (200) WITH 12 (300) DIAGONALS @ 45°	SOLID	WHITE	DIAGONALS: 20' (6.1 m) (LESS THAN 30 MPH (50 km/h))
RAILROAD CROSSING	24 (600) TRANSVERSE LINES; "RR" IS 8' (1.8 m) LETTERS; 16 (400) LINE FOR "X"	SOLID	WHITE	SEE STATE STANDARD 780001 AREA OF: "R"=3.4 SQ. FT. (0.33m²) EACH "X"=54.0 SQ. FT. (5.0 m²)

FOR FURTHER DETAILS ON PAVEMENT MARKING REFER TO STREET MARKING STANDARDS, PRINTED BY CITY OF CHICAGO, DEPARTMENT OF TRANSPORTATION, BUREAU OF TRAFFIC.

ALL DIMENSIONS ARE IN INCHES (MILLIMETERS) UNLESS OTHERWISE SHOWN.

USER NAME = footem	DESIGNED -	REVISED -T. RAMMACHER 12-07-00
	DRAWN -	REVISED - K. ENG 02-28-12
PLOT SCALE = 50.0000 ' / in.	CHECKED -	REVISED -
PLOT DATE = 3/4/2019	DATE -	REVISED -

STATE OF ILLINOIS
DEPARTMENT OF TRANSPORTATION

CITY OF CHICAGO
TYPICAL PAVEMENT MARKINGS

SCALE: NONE | SHEET 1 OF 3 SHEETS | STA. | TO STA.

F.A. RTE.	SECTION	COUNTY	TOTAL SHEETS	SHEET NO.
	TC-24 CONTRACT NO.			
	ILLINOIS FED. AID PROJECT			

MODEL: Default
FILE NAME: p:\projects\2018\18-00001\d1\final_plan\700\700_roadway\GEAT_ERB\18-00001_700_roadway_GEAT_ERB_SIGNING_AND_PAVEMENT_MARKING_DETAILS.dgn
LDA date: 3/4/2019 10:14:53 AM User: rfoltera

DESIGN BY:	EAD									
DRAWN BY:	EAD									
CHECKED BY:	MJL									
APPROVED BY:	XXX	4	7/3/2023	ISSUED FOR BID						
CDOT/APPROVED BY:		NO.	DATE	REVISIONS	DES.	DRW.	CHK.	DCCO	CDOT	

TRANSYSTEMS
222 SOUTH RIVERSIDE PLAZA SUITE 610
CHICAGO, ILLINOIS 60606

SKIDMORE, OWINGS & MERRILL LLP
224 SOUTH MICHIGAN AVENUE, SUITE 1000
CHICAGO, ILLINOIS 60604

MICHAEL J. LEY 062-055367 LICENSED PROFESSIONAL ENGINEER ILLINOIS

CHICAGO DEPARTMENT OF TRANSPORTATION
DIVISION OF ENGINEERING

STATE / LAKE LOOP ELEVATED STATION
200 NORTH STATE STREET, CHICAGO, IL 60601

SPEC. NO.

SIGNING AND PAVEMENT MARKING DETAILS

DRAWING NO. C-831

CDOT PROJECT D-1-209 | DATE: 7/3/2023 | REVISION NO.

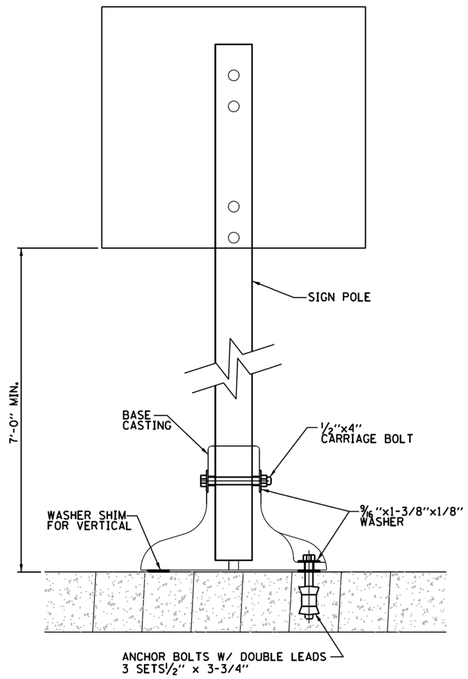

DRILL MOUNTED INSTALLATION DETAIL
NOT TO SCALE

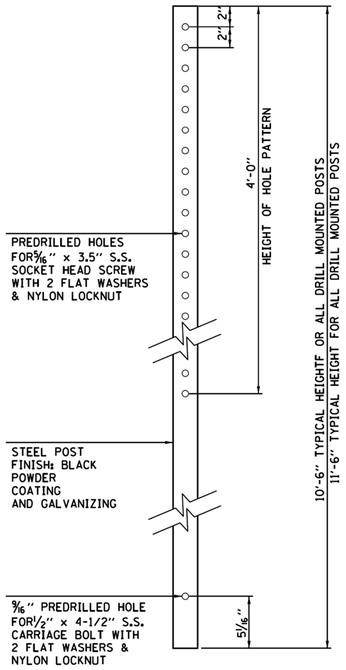

① ELEVATION: DRILLED SIGN POST
NOT TO SCALE

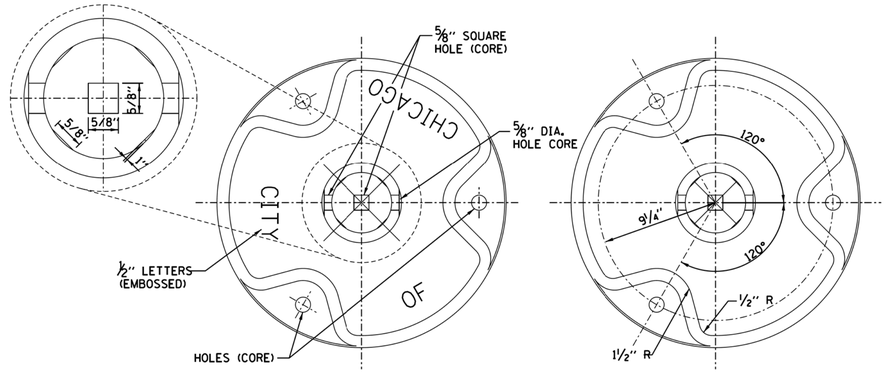

TOP VIEW

BOTTOM VIEW

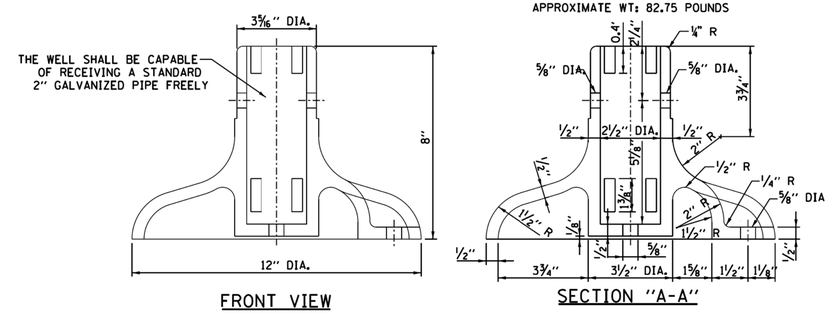

FRONT VIEW

SECTION "A-A"

SIGN POLE BASE DETAIL
NOT TO SCALE

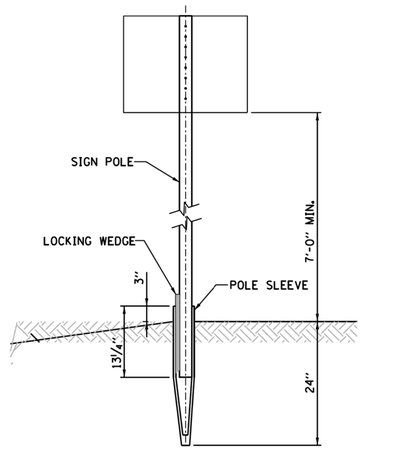

GROUND DIG INSTALLATION DETAIL
NOT TO SCALE

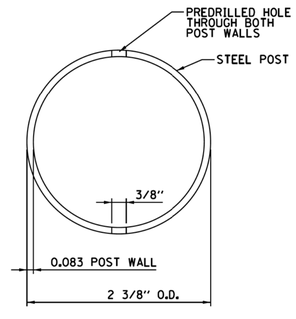

② ELEVATION: DRILLED POST
NOT TO SCALE

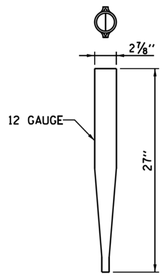

POLE SLEEVE

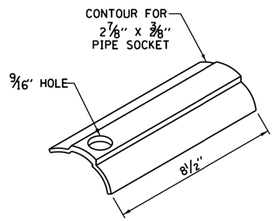

WEDGE

SIGN POLE DETAIL
NOT TO SCALE

PIPE SOCKET AND WEDGE DETAIL
NOT TO SCALE

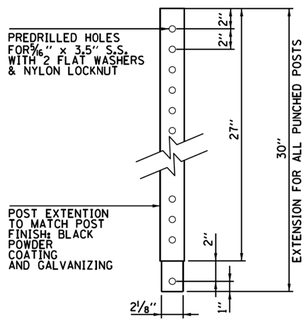

SECTION: DRILLED POST EXTENSION
NOT TO SCALE

NOTE:
PROVIDE ADDITIONAL TWO SETS OF PREDRILLED HOLES ON EXTENSION. HOLES SHALL BE LOCATED AT 30° ANGLE TO HOLES SHOWN IN SECTION 3. HOLES SHALL ACCOMMODATE 5/16"x 3.5" S.S. SOCKET HEAD SCREW WITH 2 FLAT WASHERS AND NYLON LOCKNUT.

DESIGN BY:	EAD									
DRAWN BY:	EAD									
CHECKED BY:	MJL									
APPROVED BY:	XXX	4	7/3/2023	ISSUED FOR BID						
CDOT/APPROVED BY:		NO.	DATE	REVISIONS	DES.	DRW.	CHK.	DCCO	CDOT	

TRANSYSTEMS
222 SOUTH RIVERSIDE PLAZA SUITE 610
CHICAGO, ILLINOIS 60606

SKIDMORE, OWINGS & MERRILL LLP
224 SOUTH MICHIGAN AVENUE, SUITE 1000
CHICAGO, ILLINOIS 60604

MICHAEL J. LEW 062-055367 LICENSED PROFESSIONAL ENGINEER ILLINOIS

CHICAGO DEPARTMENT OF TRANSPORTATION
DIVISION OF ENGINEERING

STATE / LAKE LOOP ELEVATED STATION
200 NORTH STATE STREET, CHICAGO, IL 60601

SIGNING AND PAVEMENT MARKING DETAILS

CDOT PROJECT D-1-209 | DATE: 7/3/2023

SPEC. NO.

DRAWING NO. C-832

REVISION NO.

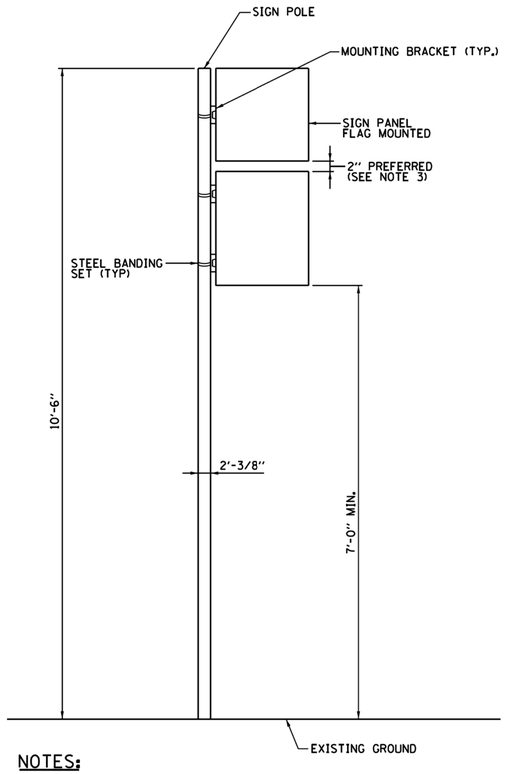

NOTES:

1. PROVIDE ONE MOUNTING BRACKET FOR SIGNS 18" AND UNDER.
2. PROVIDE TWO MOUNTING BRACKETS FOR SIGNS OVER 18".
3. REDUCE SPACING IF REQUIRED TO MAINTAIN MIN. 7'-0" CLEARANCE TO BOTTOM OF SIGN.
4. FLAG MOUNT SIGNS TOWARD SIDEWALK ALONG ARTERIAL STREETS.
5. FLAG MOUNT ALL PARKING REGULATIONS SIGNS.

FLAG MOUNTED SIGN INSTALLATION DETAIL

NOT TO SCALE

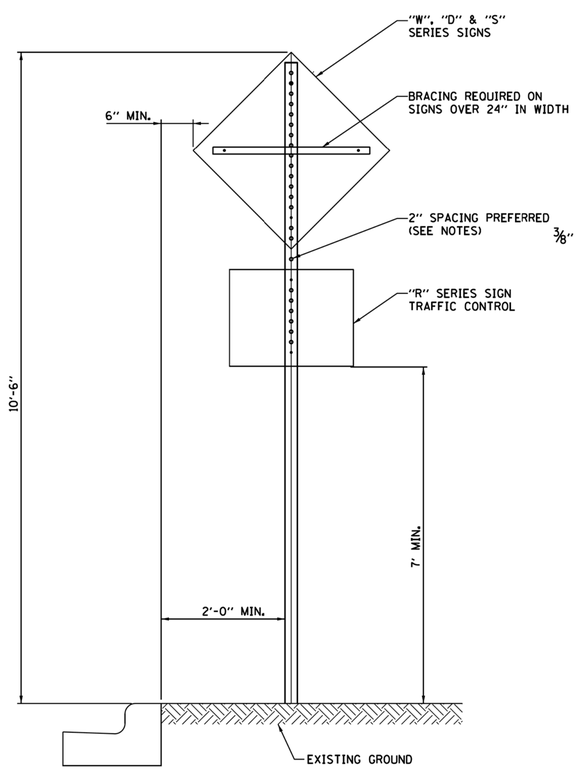

NOTE:

2" SPACING MAY BE REDUCED IF REQUIRED TO MAINTAIN MIN. 7'-0" CLEARANCE TO BASE OF SIGN.

CENTER MOUNTED SIGN INSTALLATION

NOT TO SCALE

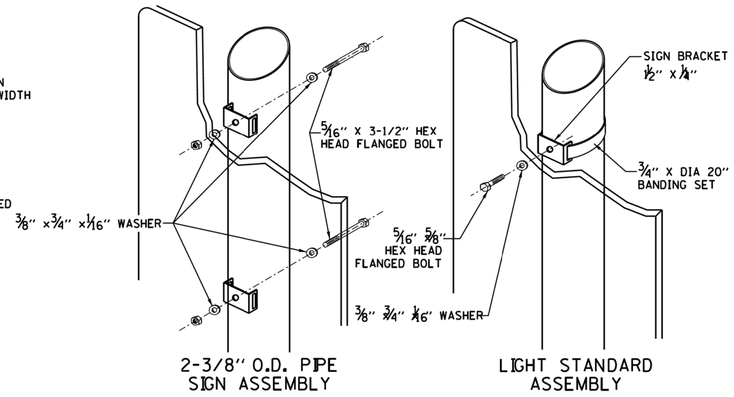

NOTE:

SIGN INSTALLATION STARTS AT 10'-6", PROVIDE MINIMUM 7'-0" CLEARANCE BETWEEN GROUND AND BOTTOM OF SIGN. RAISE INITIAL INSTALLATION HEIGHT IF REQ'D TO MAINTAIN 7' CLEAR.

REUIREMENT

- 2 BANDS PER SIGN UNDER 6'
- 3 BANDS PER SIGN OVER 6'

CENTER MOUNTED SIGN ASSEMBLY

NOT TO SCALE

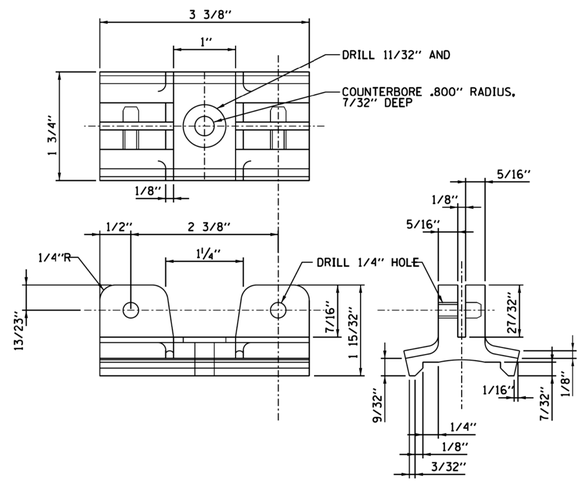

SIGN MOUNTING MATERIAL: ALUMINUM-ZINC ALLOY TENZALOY

SIGN MOUNTING BRACKET DETAIL

NOT TO SCALE (VERSION 2A)

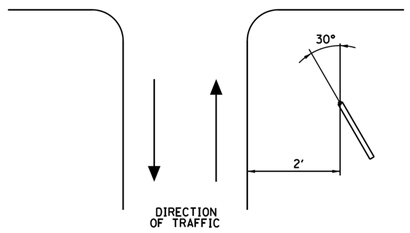

30° FLAG SIGN MOUNT

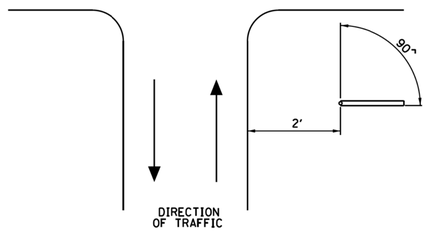

90° FLAG SIGN MOUNT

SIGN MOUNTING DETAILS

NOT TO SCALE

DESIGN BY:	EAD								
DRAWN BY:	EAD								
CHECKED BY:	MJL								
APPROVED BY:	XXX	4	7/3/2023	ISSUED FOR BID					
CDOT/APPROVED BY:		NO.	DATE	REVISIONS	DES.	DRW.	CHK.	DCCO	CDOT

TRANSYSTEMS
222 SOUTH RIVERSIDE PLAZA SUITE 610
CHICAGO, ILLINOIS 60606

SKIDMORE, OWINGS & MERRILL LLP
224 SOUTH MICHIGAN AVENUE, SUITE 1000
CHICAGO, ILLINOIS 60604

MICHAEL J. LEW
062-055367
LICENSED PROFESSIONAL ENGINEER
ILLINOIS

CHICAGO DEPARTMENT OF TRANSPORTATION
DIVISION OF ENGINEERING

STATE / LAKE LOOP ELEVATED STATION
200 NORTH STATE STREET, CHICAGO, IL 60601

SPEC. NO.

SIGNING AND PAVEMENT MARKING DETAILS

DRAWING NO. C-833

CDOT PROJECT D-1-209

DATE: 7/3/2023

REVISION NO.

REGULATORY TRAFFIC SIGNS
STOP AND ONE–WAY SIGNS
(CHICAGO STYLE)

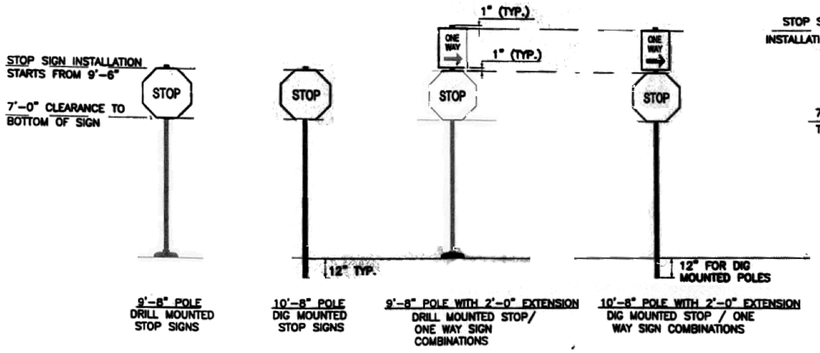

TYPICAL LAYOUT
NOT TO SCALE

REGULATORY TRAFFIC SIGNS
TRAFFIC SIGNAL CONTROL SERIES (MAST ARMS)

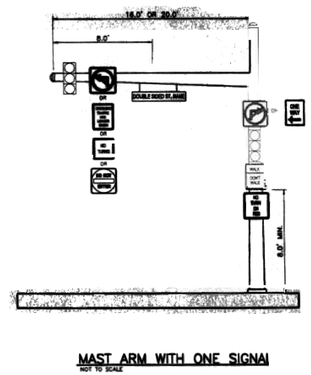

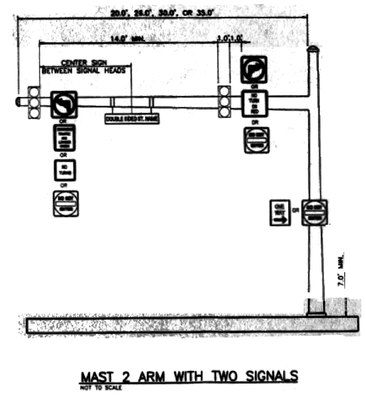

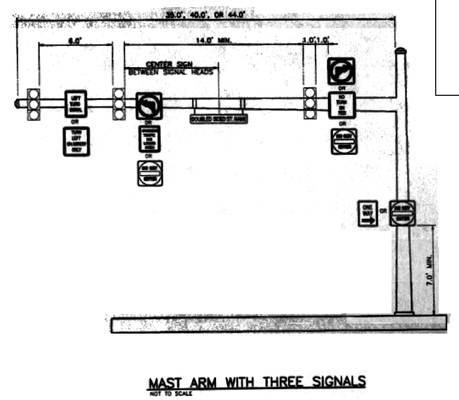

TYPICAL LAYOUT

REGULATORY TRAFFIC SIGNS
(CHICAGO STYLE)

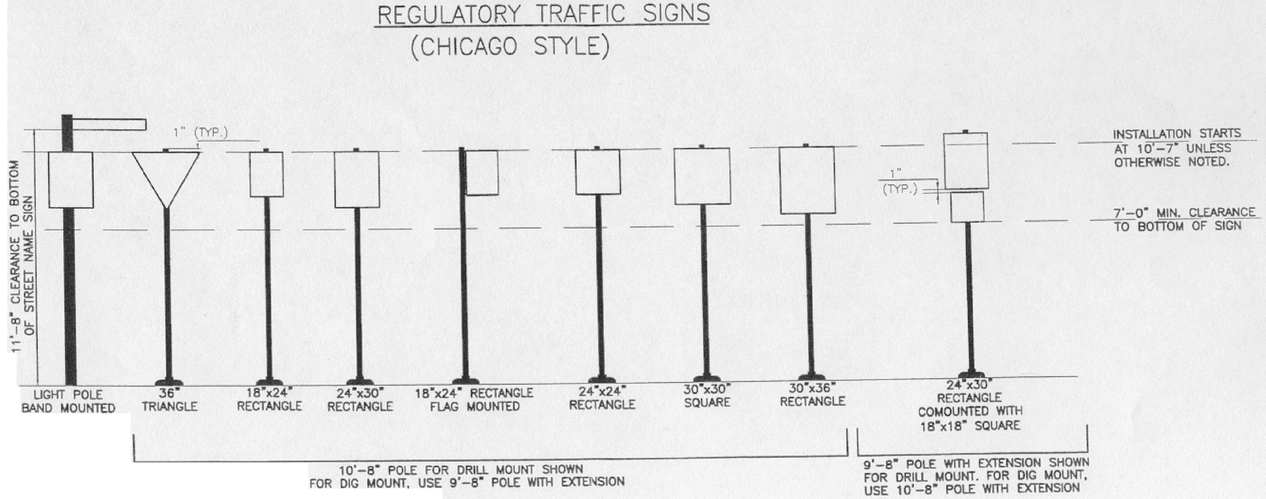

TYPICAL LAYOUT
NOT TO SCALE

REGULATORY TRAFFIC SIGNS
TRAFFIC SIGNAL CONTROL SERIES (SIGNAL POST)

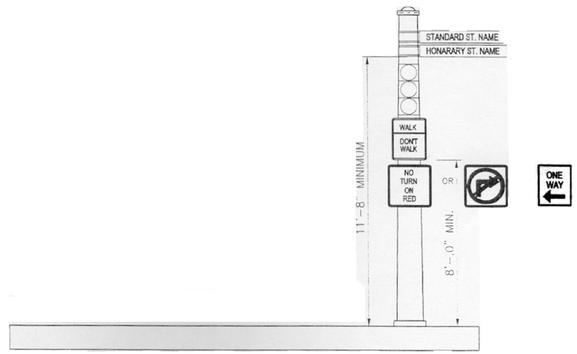

TYPICAL LAYOUT
NOT TO SCALE

DESIGN BY:	EAD								
DRAWN BY:	EAD								
CHECKED BY:	MJL								
APPROVED BY:	XXX	4	7/3/2023	ISSUED FOR BID					
CDOT/APPROVED BY:		NO.	DATE	REVISIONS	DES.	DRW.	CHK.	DCCO	CDOT

TRANSYSTEMS
222 SOUTH RIVERSIDE PLAZA SUITE 610
CHICAGO, ILLINOIS 60606

SKIDMORE, OWINGS & MERRILL LLP
224 SOUTH MICHIGAN AVENUE, SUITE 1000
CHICAGO, ILLINOIS 60604

MICHAEL J. LEV
062-055367
LICENSED PROFESSIONAL ENGINEER
ILLINOIS

CHICAGO DEPARTMENT OF TRANSPORTATION
DIVISION OF ENGINEERING

STATE / LAKE LOOP ELEVATED STATION
200 NORTH STATE STREET, CHICAGO, IL 60601

SPEC. NO.

SIGNING AND PAVEMENT MARKING DETAILS

DRAWING NO.
C-834

CDOT PROJECT D-1-209

DATE: 7/3/2023

REVISION NO.

HOLE PATTERNS ON OVERHEAD MAST ARM PANELS, STRUCTURAL DETAILS AND MOUNTING HARDWARE TO MATCH EXISTING. VERIFY MATERIALS WITH CHICAGO SIGN SHOP.

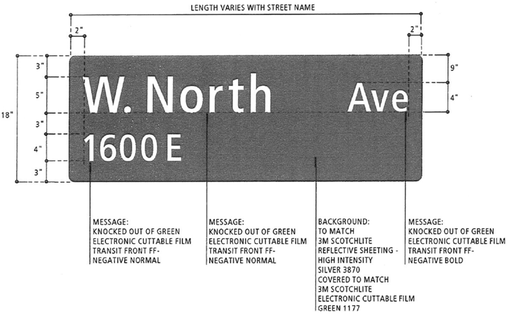

1 Layout: Sign Type D3-2-4
Scale: 1" = 1' - 0"

Standard Oversize
Single Street Name Sign
This oversize street name id is used to post the name of one street on the mast arm at a signalized intersection. It has been designed to accommodate the street name and the address.

General Specifications
Panel: Aluminum
Dimensions: Height: 18" Length: Varies
Silkscreen: Green Band
Reflective Vinyl: Background

REGULATORY PARKING SIGNS (CHICAGO STYLE)

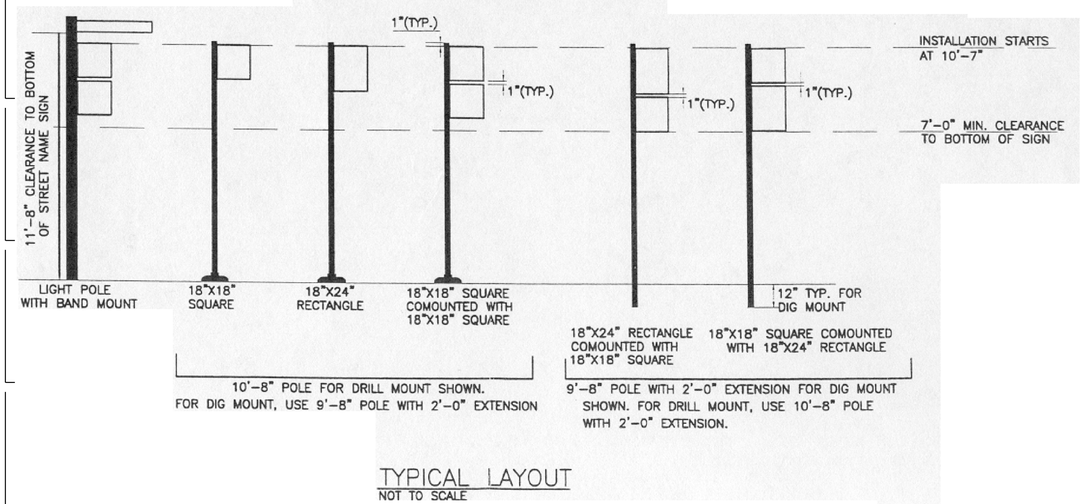

TYPICAL LAYOUT
NOT TO SCALE

SIGN QUARTERING AT INTERSECTIONS

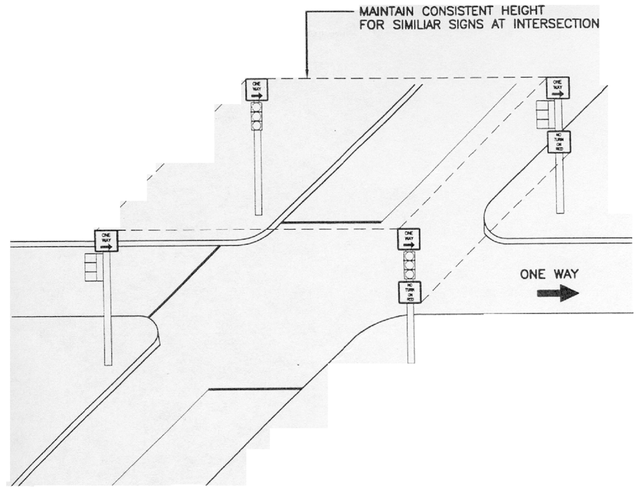

TYPICAL LAYOUT
NOT TO SCALE

GUIDE SIGNS
STREET NAME LOCATION AT SIGNALIZED INTERSECTIONS OF TWO ARTERIAL STREETS

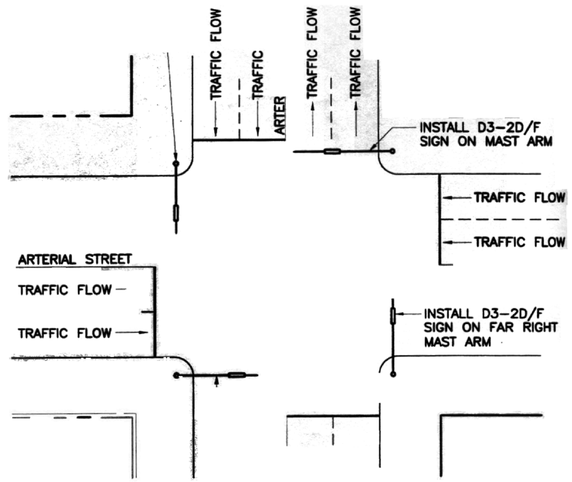

NOTES:

1. WHERE MORE THAN ONE MAST ARM IS PROVIDED, INSTALL FIRST SET OF D3-2D/F SIGNS ON FAR NORTH (FOR NORTH-SOUTH STREETS) OR FAR EAST (FOR EAST-WEST STREETS) CORNER OF INTERSECTION.
2. USE OF SINGLE STREET NAME SIGN ON TWO LANE ARTERIALS PROPOSED AS PILOT PROGRAM. A SECOND SIGN MAY BE INSTALLED ON PRINCIPAL ARTERIALS WHEN REQUESTED BASED ON REVIEW BY TRAFFIC ENGINEER.

TYPICAL LAYOUT

DESIGN BY:	EAD									
DRAWN BY:	EAD									
CHECKED BY:	MJL									
APPROVED BY:	XXX	4	7/3/2023	ISSUED FOR BID						
CDOT/APPROVED BY:		NO.	DATE	REVISIONS	DES.	DRW.	CHK.	DCCO	CDOT	

TRANSYSTEMS
222 SOUTH RIVERSIDE PLAZA SUITE 610
CHICAGO, ILLINOIS 60606

SKIDMORE, OWINGS & MERRILL LLP
224 SOUTH MICHIGAN AVENUE, SUITE 1000
CHICAGO, ILLINOIS 60604

MICHAEL J. LEV
062-055367
LICENSED PROFESSIONAL ENGINEER
ILLINOIS

CHICAGO DEPARTMENT OF TRANSPORTATION
DIVISION OF ENGINEERING

STATE / LAKE LOOP ELEVATED STATION
200 NORTH STATE STREET, CHICAGO, IL 60601

SPEC. NO.

SIGNING AND PAVEMENT MARKING DETAILS

DRAWING NO.
C-835

CDOT PROJECT D-1-209 | DATE: 7/3/2023 | REVISION NO.

This layout is used to post no parking restrictions inside of a tow zone. It has been designed with a rule instead of a an arrow to illustrate a no parking restriction in both directions. There is space for a one line message to convey the type of restriction posted. All panels are labeled with City of Chicago.

The portion of the layout illustrated below is to be silkscreened & stocked as a template. The vinyl message will be applied when a sign is ordered for installation.

General Specifications
Panel: .080" Aluminum
Dimensions: 18"x 18"
Corner Radius: 3/4"
Finish: White Powder Coating
Graphics: Silkscreened & Applied Vinyl

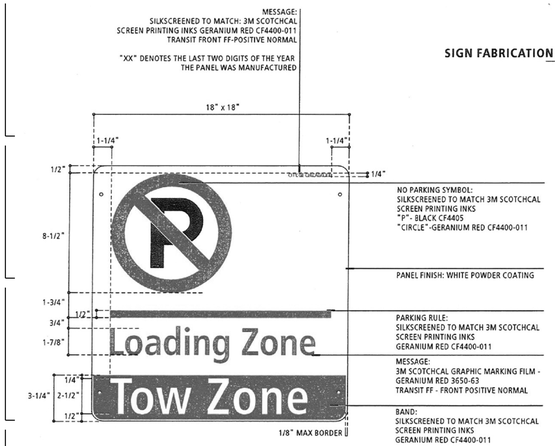

1 Layout: Sign Type R7-201-1
Scale: 2" = 1'- 0"

This layout is used to post no parking restrictions inside of a tow zone. It has been designed with an arrow to illustrate a no parking restriction in one direction. There is space for a one line message to convey the type of restriction posted. All panels are labeled with City of Chicago.

The portion of the layout illustrated below is to be silkscreened & stocked as a template. The vinyl message will be applied when a sign is ordered for installation.

General Specifications
Panel: .080" Aluminum
Dimensions: 18"x 18"
Corner Radius: 3/4"
Finish: White Powder Coating
Graphics: Silkscreened & Applied Vinyl

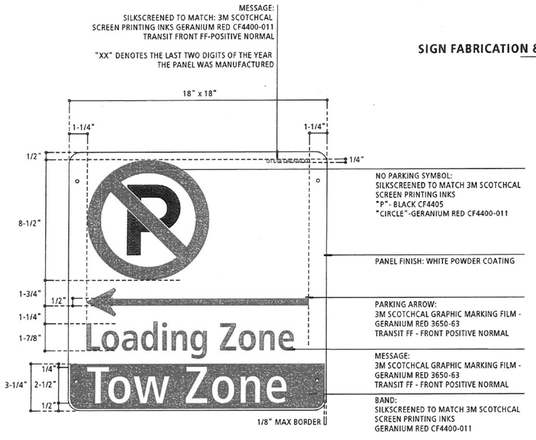

1 Layout: Sign Type R7-201-5 (R/L/D)
Scale: 2" = 1'- 0"

This layout is used to post no parking restrictions outside side of a tow zone. It has been designed with an arrow to illustrate a no parking restriction in one direction. There is space for a five line message to convey the type of restriction posted. All panels are labeled with City of Chicago.

The portion of the layout illustrated below is to be silkscreened & stocked as a template. The vinyl message will be applied when a sign is ordered for installation.

General Specifications
Panel: .080" Aluminum
Dimensions: 18"x 18"
Corner Radius: 3/4"
Finish: White Powder Coating
Silkscreen: Symbol, Tow Zone Band
Graphics: Silkscreened & Applied Vinyl

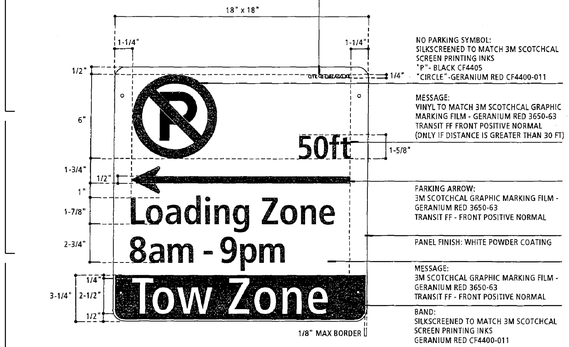

1 Layout
Scale: 2" = 1'- 0"

Sign Types
R7-206-1 (R/L)
R7-201-2 (R/L/D)
R7-201-3 (R/L/D)
R7-202-1 (R/L/D)
R7-207-1 (R/L)
R7-207-2 (R/L)
R7-207-3 (R/L)
R7-207-5 (R/L)

This layout is used to post no parking restrictions outside side of a tow zone. It has been designed with an arrow to illustrate a no parking restriction in one direction. There is space for a five line message to convey the type of restriction posted. All panels are labeled with City of Chicago.

The portion of the layout illustrated below is to be silkscreened & stocked as a template. The vinyl message will be applied when a sign is ordered for installation.

General Specifications
Panel: .080" Aluminum
Dimensions: 18"x 24"
Corner Radius: 3/4"
Finish: White Powder Coating
Graphics: Silkscreened & Applied Vinyl

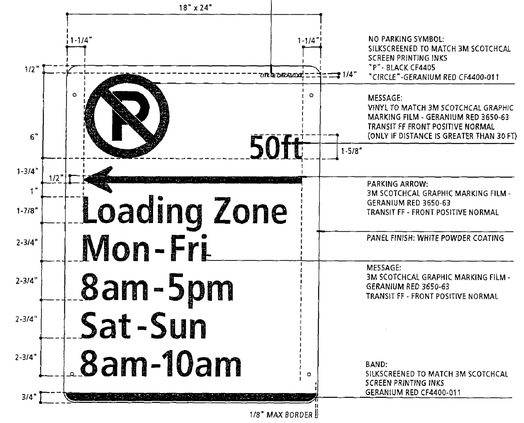

1 Layout
Scale: 2" = 1'- 0"

Sign Types
R7-6-2 (R/L)
R7-2-2 (R/L/D)
R7-2-3 (R/L/D)

DESIGN BY:	EAD									
DRAWN BY:	EAD									
CHECKED BY:	MJL									
APPROVED BY:	XXX	4	7/3/2023	ISSUED FOR BID						
CDOT/APPROVED BY:		NO.	DATE	REVISIONS	DES.	DRW.	CHK.	DCCO	CDOT	

TRANSYSTEMS
222 SOUTH RIVERSIDE PLAZA SUITE 610
CHICAGO, ILLINOIS 60606

SKIDMORE, OWINGS & MERRILL LLP
224 SOUTH MICHIGAN AVENUE, SUITE 1000
CHICAGO, ILLINOIS 60604

MICHAEL J. LEVI
062-055367
LICENSED PROFESSIONAL ENGINEER
ILLINOIS

CHICAGO DEPARTMENT OF TRANSPORTATION
DIVISION OF ENGINEERING

STATE / LAKE LOOP ELEVATED STATION
200 NORTH STATE STREET, CHICAGO, IL 60601

SIGNING AND PAVEMENT MARKING DETAILS

CDOT PROJECT D-1-209 | DATE: 7/3/2023

SPEC. NO.

DRAWING NO. C-836

REVISION NO.

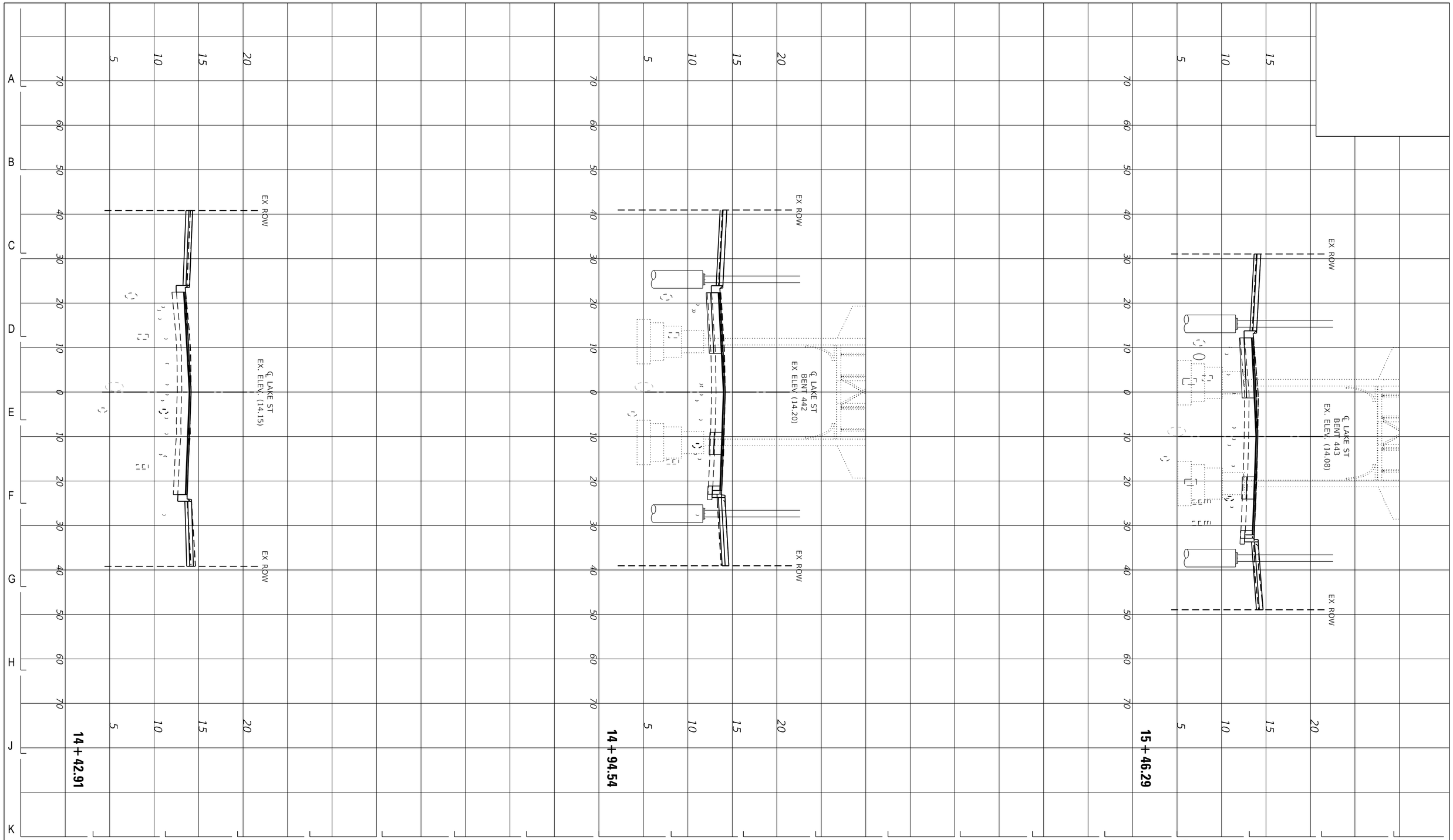

DESIGN BY:										
DRAWN BY:										
CHECKED BY:										
APPROVED BY:		4	7/3/2023	ISSUED FOR BID	EAD	EAD	MJL			
CDOT/APPROVED BY:		NO.	DATE	REVISIONS	DES.	DRW.	CHK.	DCCO	CDOT	

TranSystems
TRANSYSTEMS
222 SOUTH RIVERSIDE PLAZA SUITE 610
CHICAGO, ILLINOIS 60606

SOM
SKIDMORE, OWINGS & MERRILL LLP
224 SOUTH MICHIGAN AVENUE, SUITE 1000
CHICAGO, ILLINOIS 60604

MICHAEL J. LEV
062-055367
LICENSED PROFESSIONAL ENGINEER
OF ILLINOIS

CDOT
CHICAGO DEPARTMENT OF TRANSPORTATION
DIVISION OF ENGINEERING

STATE / LAKE LOOP ELEVATED STATION
200 NORTH STATE STREET, CHICAGO, IL 60601

SPEC. NO.

CROSS SECTIONS - LAKE STREET

DRAWING NO.
C-901

CDOT PROJECT D-1-209

DATE: 7/3/2023

REVISION NO.

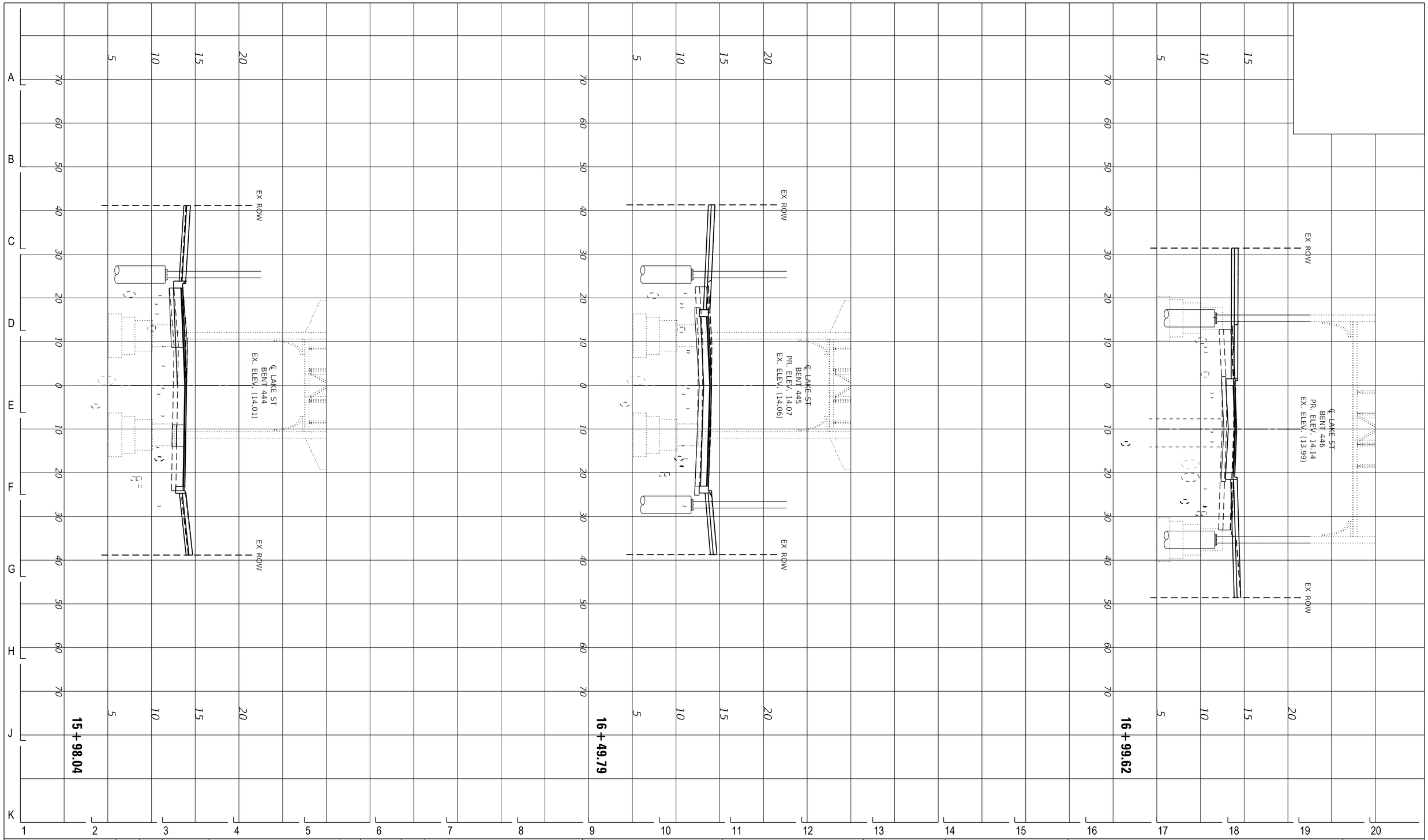

DESIGN BY:										
DRAWN BY:										
CHECKED BY:										
APPROVED BY:		4	7/3/2023	ISSUED FOR BID	EAD	EAD	MJL			
CDOT/APPROVED BY:		NO.	DATE	REVISIONS	DES.	DRW.	CHK.	DCCO	CDOT	

TRANSYSTEMS
222 SOUTH RIVERSIDE PLAZA SUITE 610
CHICAGO, ILLINOIS 60606

SKIDMORE, OWINGS & MERRILL LLP
224 SOUTH MICHIGAN AVENUE, SUITE 1000
CHICAGO, ILLINOIS 60604

MICHAEL J. LEV
062-055367
LICENSED PROFESSIONAL ENGINEER
ILLINOIS

CHICAGO DEPARTMENT OF TRANSPORTATION
DIVISION OF ENGINEERING

STATE / LAKE LOOP ELEVATED STATION
200 NORTH STATE STREET, CHICAGO, IL 60601

SPEC. NO.

CROSS SECTIONS - LAKE STREET

DRAWING NO. C-902

CDOT PROJECT D-1-209 | DATE: 7/3/2023 | REVISION NO.

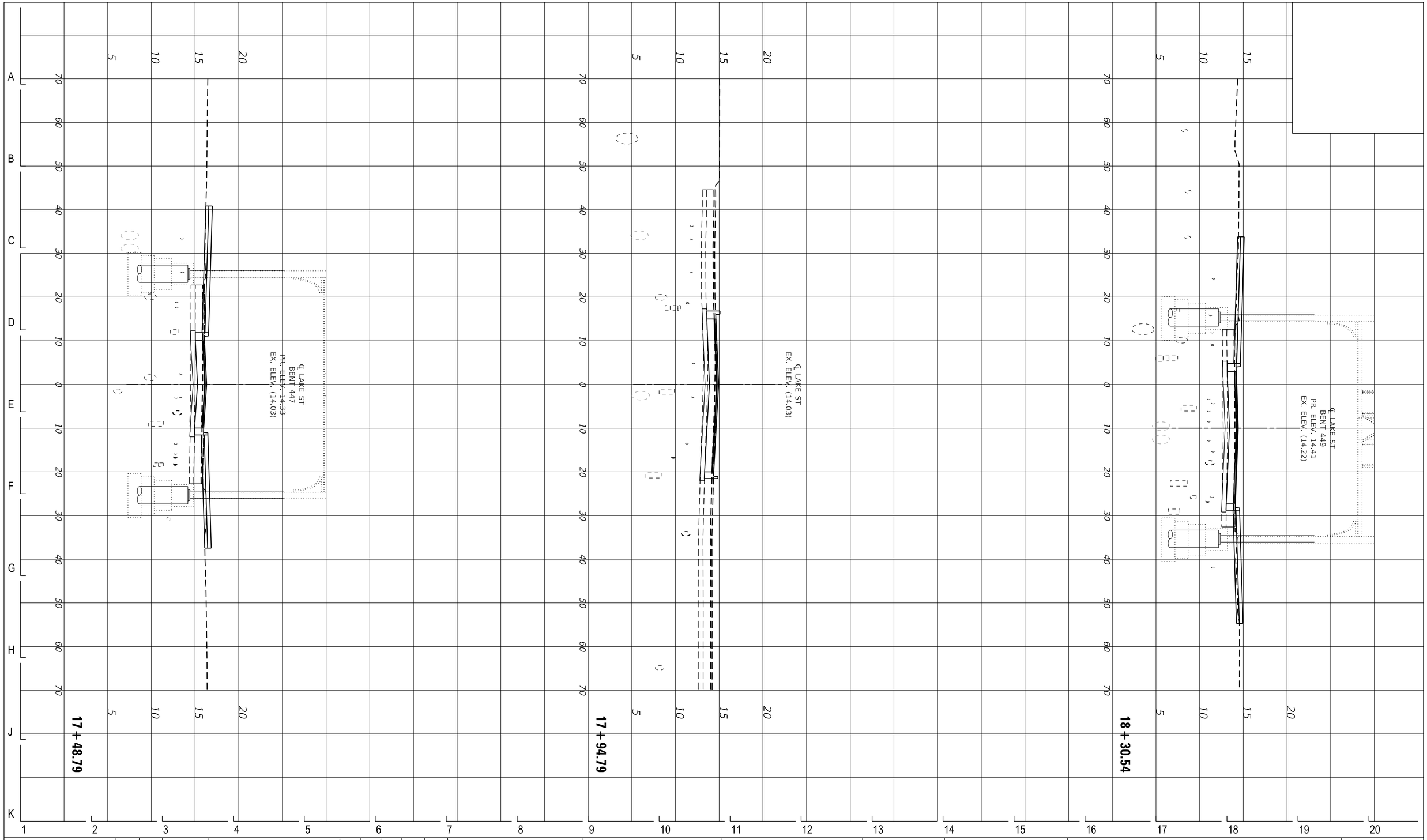

DESIGN BY:										
DRAWN BY:										
CHECKED BY:										
APPROVED BY:		4	7/3/2023	ISSUED FOR BID	EAD	EAD	MJL			
CDOT/APPROVED BY:		NO.	DATE	REVISIONS	DES.	DRW.	CHK.	DCCO	CDOT	

TranSystems
TRANSYSTEMS
222 SOUTH RIVERSIDE PLAZA SUITE 610
CHICAGO, ILLINOIS 60606

SOM
SKIDMORE, OWINGS & MERRILL LLP
224 SOUTH MICHIGAN AVENUE, SUITE 1000
CHICAGO, ILLINOIS 60604

MICHAEL J. LEV
062-055367
LICENSED PROFESSIONAL ENGINEER
ILLINOIS

CDOT
CHICAGO DEPARTMENT OF TRANSPORTATION
DIVISION OF ENGINEERING

STATE / LAKE LOOP ELEVATED STATION
200 NORTH STATE STREET, CHICAGO, IL 60601

CROSS SECTIONS - LAKE STREET

CDOT PROJECT D-1-209

DATE: 7/3/2023

SPEC. NO.

DRAWING NO.
C-903

REVISION NO.

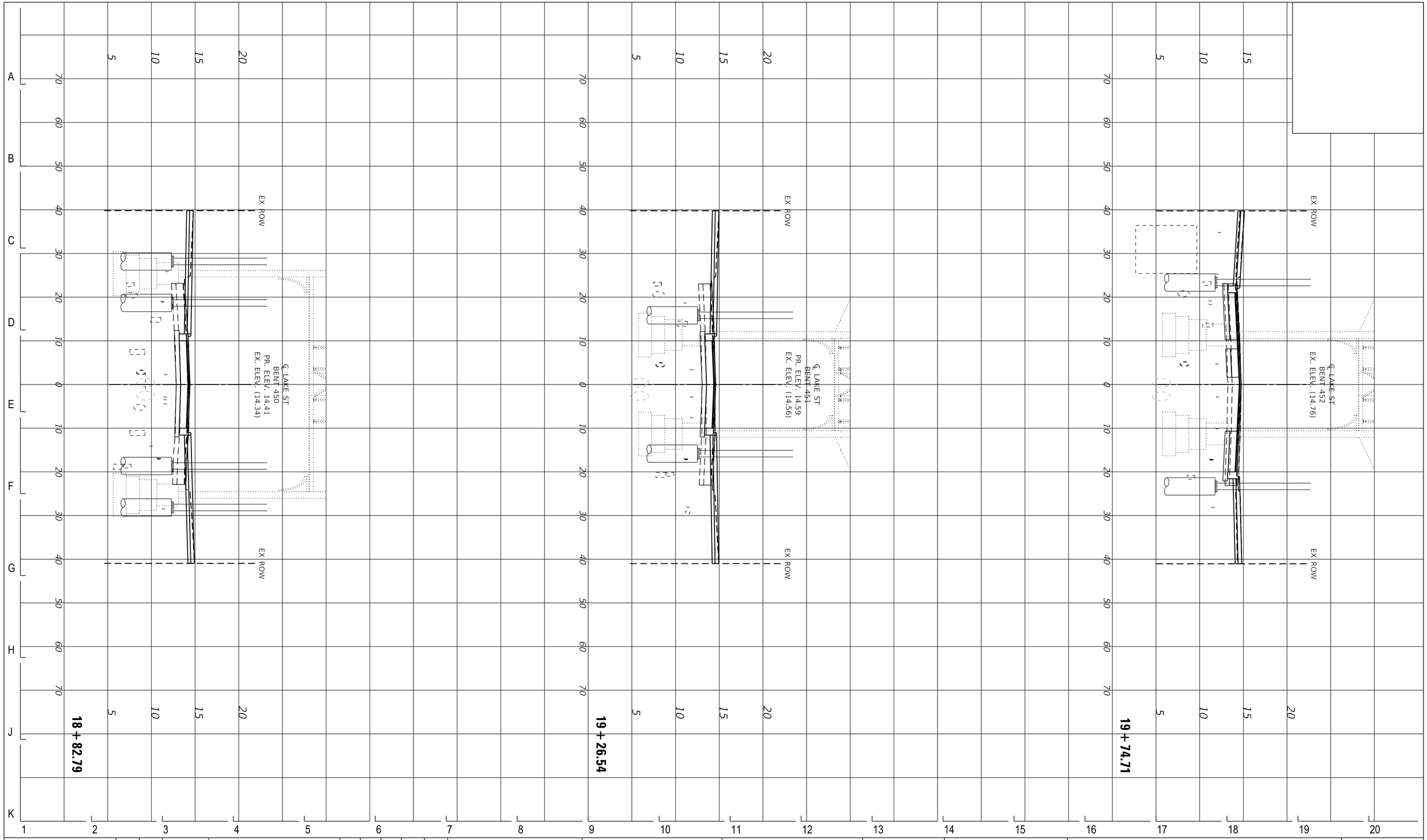

DESIGN BY:										
DRAWN BY:										
CHECKED BY:										
APPROVED BY:		4	7/3/2023	ISSUED FOR BID	EAD	EAD	MJL			
CDOT/APPROVED BY:		NO.	DATE	REVISIONS	DES.	DRW.	CHK.	DCCO	CDOT	

TranSystems
TRANSYSTEMS
222 SOUTH RIVERSIDE PLAZA SUITE 610
CHICAGO, ILLINOIS 60606

SOM
SKIDMORE, OWINGS & MERRILL LLP
224 SOUTH MICHIGAN AVENUE, SUITE 1000
CHICAGO, ILLINOIS 60604

MICHAEL J. LEV
062-055367
LICENSED PROFESSIONAL ENGINEER
ILLINOIS

CDOT
CHICAGO DEPARTMENT OF TRANSPORTATION
DIVISION OF ENGINEERING

STATE / LAKE LOOP ELEVATED STATION
200 NORTH STATE STREET, CHICAGO, IL 60601

CROSS SECTIONS - LAKE STREET

CDOT PROJECT D-1-209

DATE: 7/3/2023

SPEC. NO.

DRAWING NO.
C-904

REVISION NO.

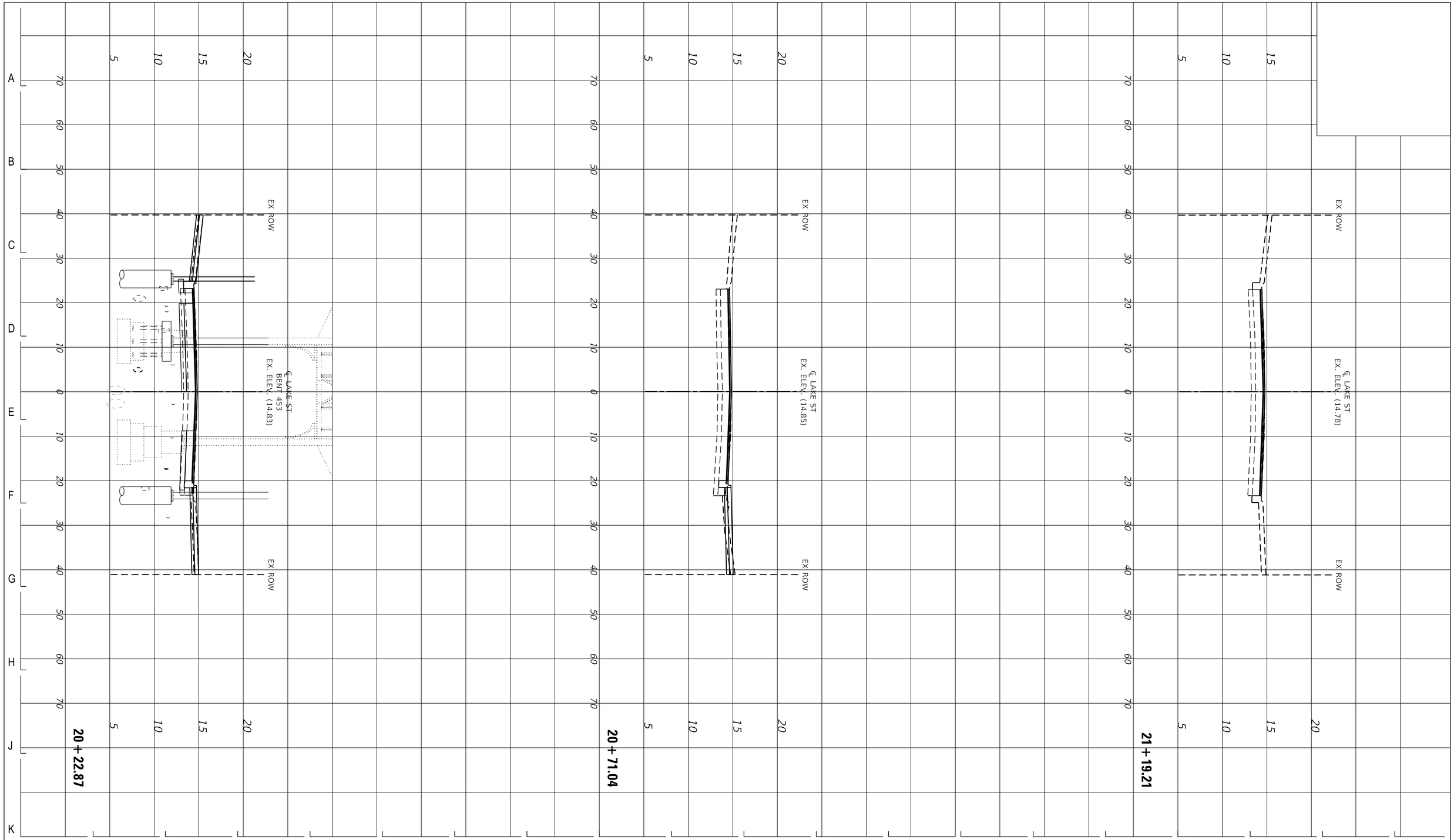

DESIGN BY:										
DRAWN BY:										
CHECKED BY:										
APPROVED BY:		4	7/3/2023	ISSUED FOR BID	EAD	EAD	MJL			
CDOT/APPROVED BY:		NO.	DATE	REVISIONS	DES.	DRW.	CHK.	DCCO	CDOT	

TranSystems
TRANSYSTEMS
222 SOUTH RIVERSIDE PLAZA SUITE 610
CHICAGO, ILLINOIS 60606

SOM
SKIDMORE, OWINGS & MERRILL LLP
224 SOUTH MICHIGAN AVENUE, SUITE 1000
CHICAGO, ILLINOIS 60604

MICHAEL J. LEV
062-055367
LICENSED PROFESSIONAL ENGINEER
ILLINOIS

CDOT
CHICAGO DEPARTMENT OF TRANSPORTATION
DIVISION OF ENGINEERING

STATE / LAKE LOOP ELEVATED STATION
200 NORTH STATE STREET, CHICAGO, IL 60601

CROSS SECTIONS - LAKE STREET

CDOT PROJECT D-1-209

DATE: 7/3/2023

SPEC. NO.

DRAWING NO.
C-905

REVISION NO.

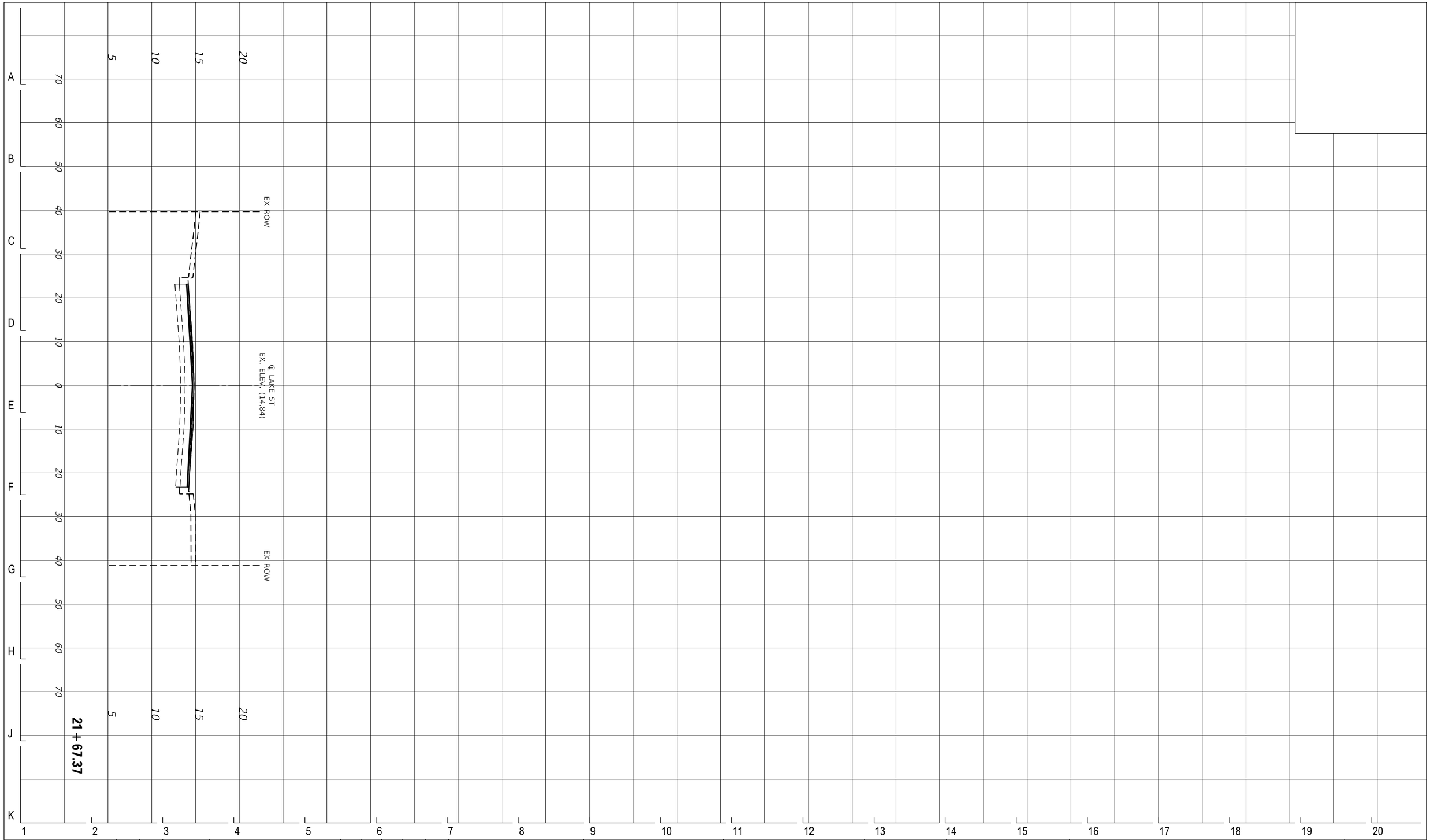

DESIGN BY:										
DRAWN BY:										
CHECKED BY:										
APPROVED BY:		4	7/3/2023	ISSUED FOR BID	EAD	EAD	MJL		
CDOT/APPROVED BY:		NO.	DATE	REVISIONS	DES.	DRW.	CHK.	DCCO	CDOT

TRANSYSTEMS
222 SOUTH RIVERSIDE PLAZA SUITE 610
CHICAGO, ILLINOIS 60606

SKIDMORE, OWINGS & MERRILL LLP
224 SOUTH MICHIGAN AVENUE, SUITE 1000
CHICAGO, ILLINOIS 60604

MICHAEL J. LEV
062-055367
LICENSED PROFESSIONAL ENGINEER
OF
ILLINOIS

CHICAGO DEPARTMENT OF TRANSPORTATION
DIVISION OF ENGINEERING

STATE / LAKE LOOP ELEVATED STATION
200 NORTH STATE STREET, CHICAGO, IL 60601

SPEC. NO.

CROSS SECTIONS - LAKE STREET

DRAWING NO.
C-906

CDOT PROJECT D-1-209

DATE: 7/3/2023

REVISION NO.

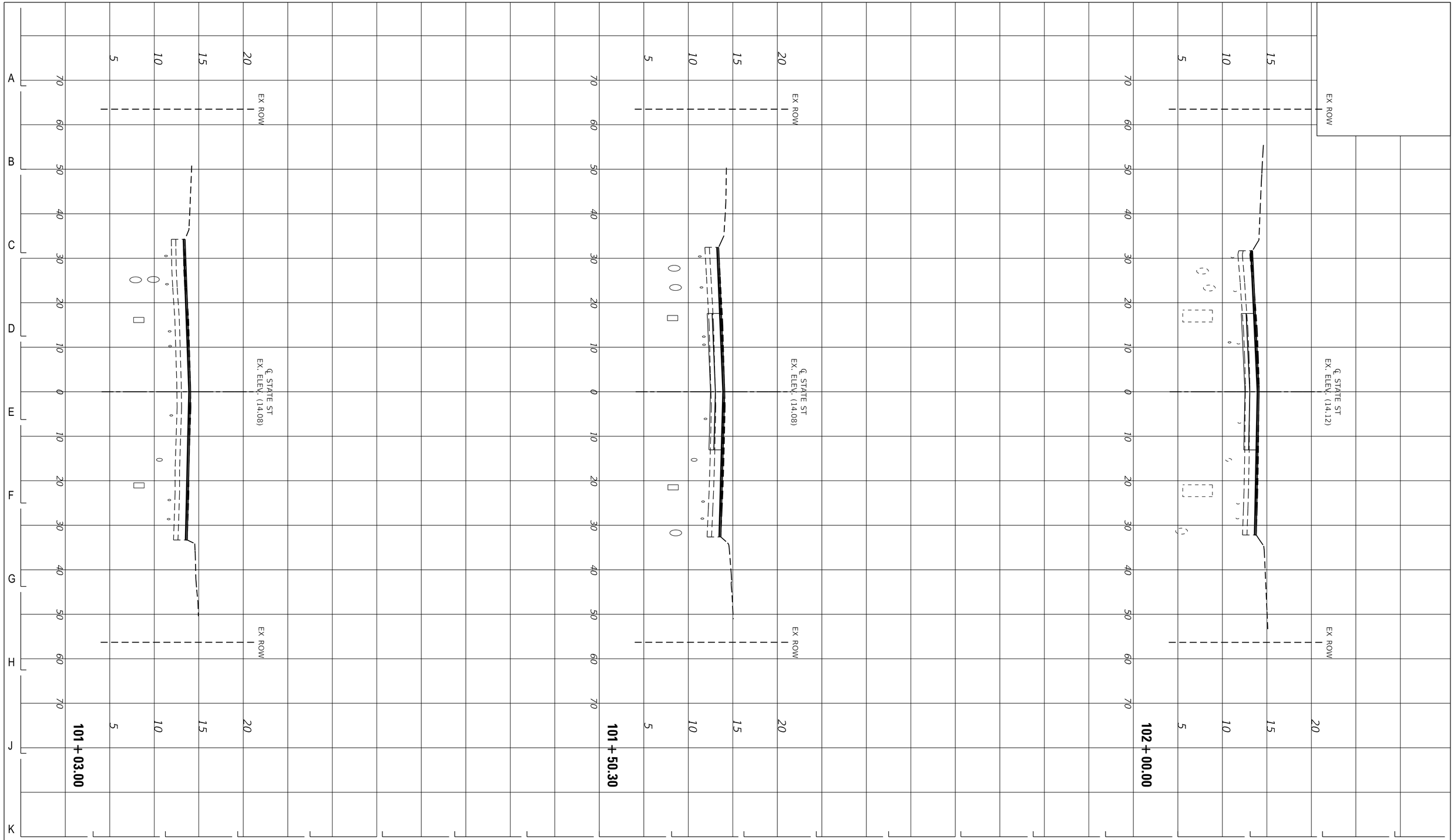

DESIGN BY:										
DRAWN BY:										
CHECKED BY:										
APPROVED BY:		4	7/3/2023	ISSUED FOR BID	EAD	EAD	MJL			
CDOT/APPROVED BY:		NO.	DATE	REVISIONS	DES.	DRW.	CHK.	DCCO	CDOT	

TRANSYSTEMS
222 SOUTH RIVERSIDE PLAZA SUITE 610
CHICAGO, ILLINOIS 60606

SOM
SKIDMORE, OWINGS & MERRILL LLP
224 SOUTH MICHIGAN AVENUE, SUITE 1000
CHICAGO, ILLINOIS 60604

MICHAEL J. LEV
062-055367
LICENSED PROFESSIONAL ENGINEER
OF ILLINOIS

CDOT
CHICAGO DEPARTMENT OF TRANSPORTATION
DIVISION OF ENGINEERING

STATE / LAKE LOOP ELEVATED STATION
200 NORTH STATE STREET, CHICAGO, IL 60601

SPEC. NO.

CROSS SECTIONS - STATE STREET

DRAWING NO.
C-907

CDOT PROJECT D-1-209

DATE: 7/3/2023

REVISION NO.

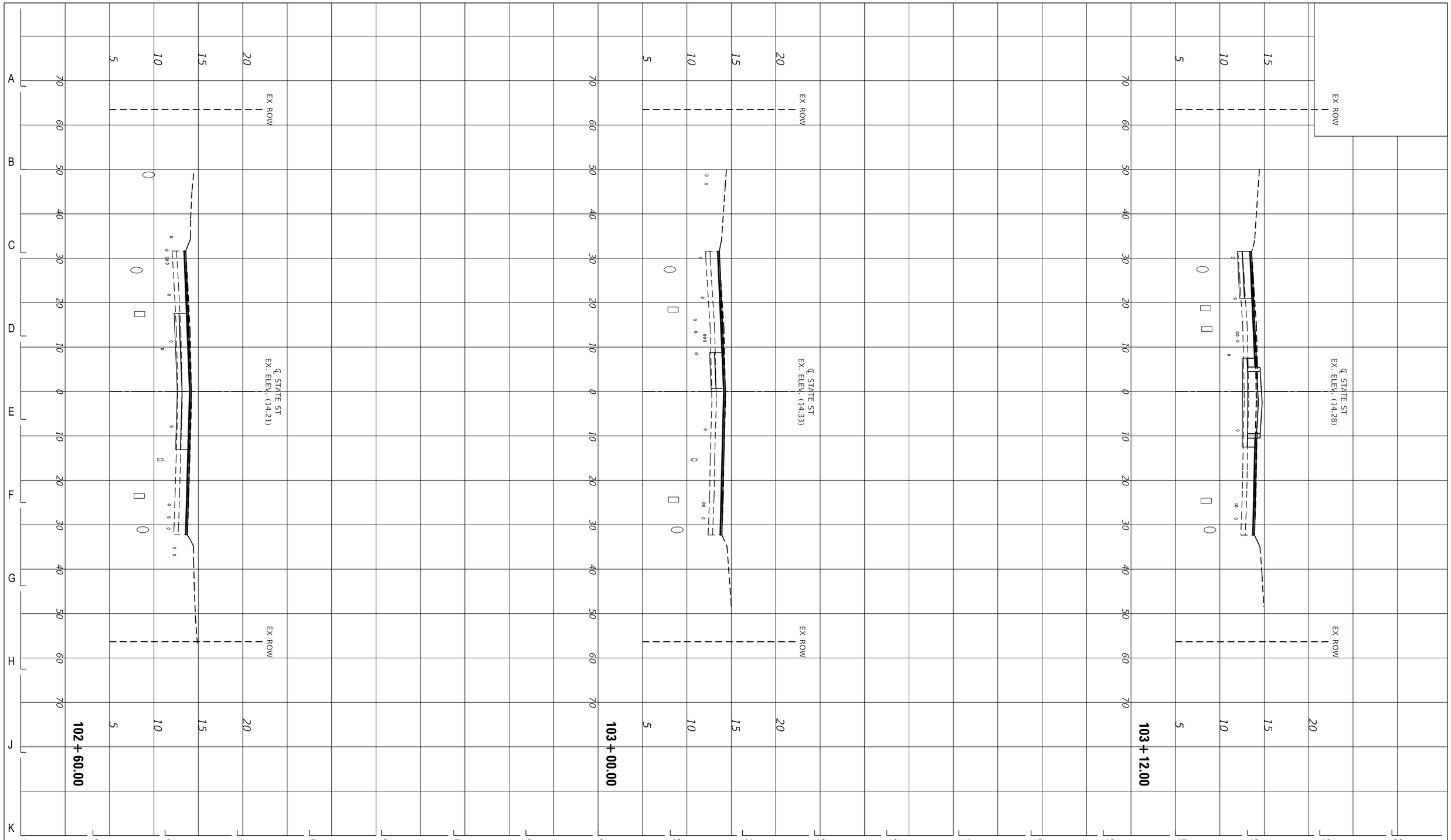

DESIGN BY:										
DRAWN BY:										
CHECKED BY:										
APPROVED BY:		4	7/3/2023	ISSUED FOR BID	EAD	EAD	MJL			
CDOT/APPROVED BY:		NO.	DATE	REVISIONS	DES.	DRW.	CHK.	DCCO	CDOT	

TRANSYSTEMS
222 SOUTH RIVERSIDE PLAZA SUITE 610
CHICAGO, ILLINOIS 60606

SKIDMORE, OWINGS & MERRILL LLP
224 SOUTH MICHIGAN AVENUE, SUITE 1000
CHICAGO, ILLINOIS 60604

MICHAEL J. LEV
062-055367
LICENSED PROFESSIONAL ENGINEER
ILLINOIS

CHICAGO DEPARTMENT OF TRANSPORTATION
DIVISION OF ENGINEERING

STATE / LAKE LOOP ELEVATED STATION
200 NORTH STATE STREET, CHICAGO, IL 60601

SPEC. NO.

CROSS SECTIONS - STATE STREET

DRAWING NO.
C-908

CDOT PROJECT D-1-209

DATE: 7/3/2023

REVISION NO.

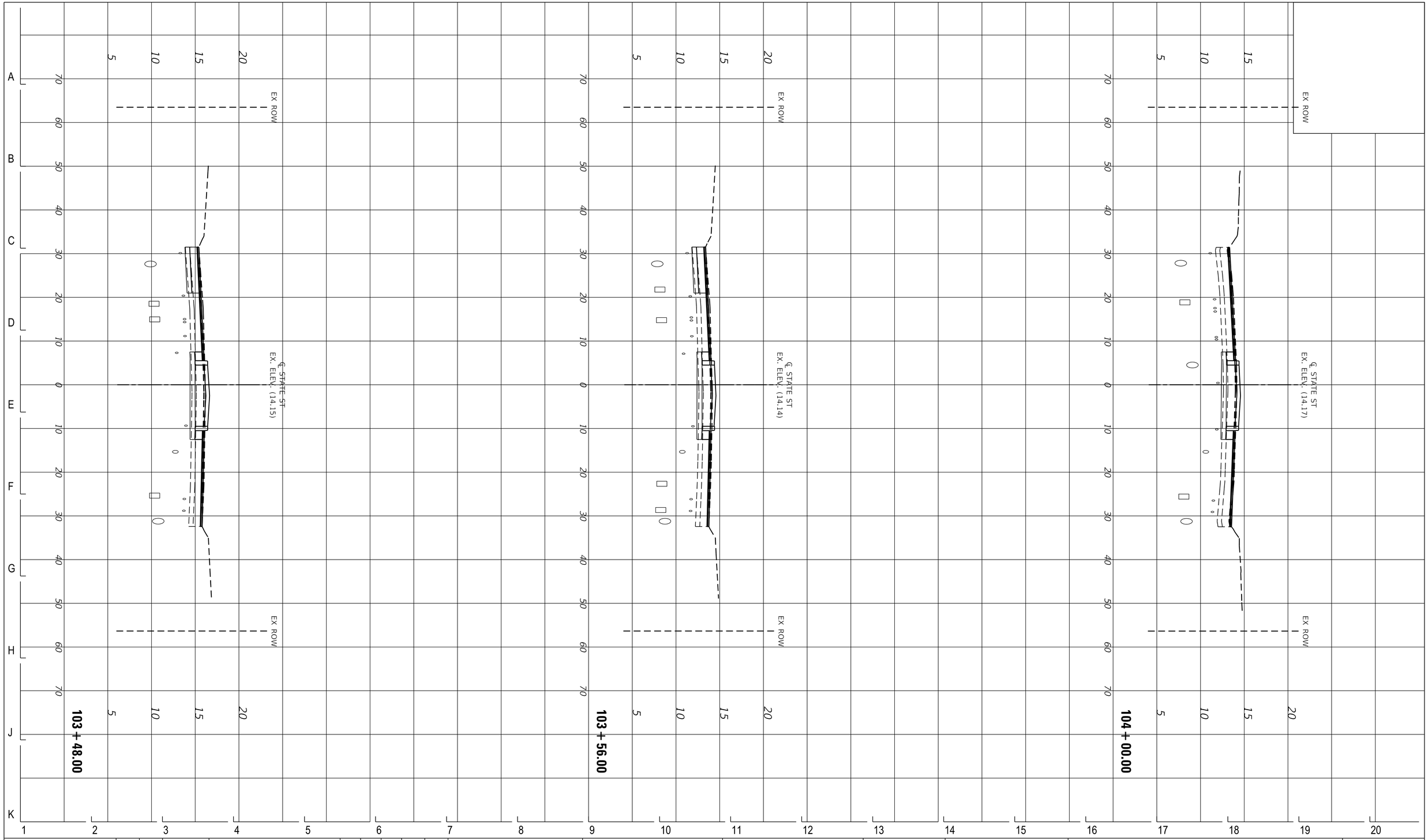

DESIGN BY:										
DRAWN BY:										
CHECKED BY:										
APPROVED BY:		4	7/3/2023	ISSUED FOR BID	EAD	EAD	MJL			
CDOT/APPROVED BY:		NO.	DATE	REVISIONS	DES.	DRW.	CHK.	DCCO	CDOT	

TRANSYSTEMS
222 SOUTH RIVERSIDE PLAZA SUITE 610
CHICAGO, ILLINOIS 60606

SKIDMORE, OWINGS & MERRILL LLP
224 SOUTH MICHIGAN AVENUE, SUITE 1000
CHICAGO, ILLINOIS 60604

MICHAEL J. LEV
062-055367
LICENSED PROFESSIONAL ENGINEER
OF
ILLINOIS

CHICAGO DEPARTMENT OF TRANSPORTATION
DIVISION OF ENGINEERING

STATE / LAKE LOOP ELEVATED STATION
200 NORTH STATE STREET, CHICAGO, IL 60601

SPEC. NO.

CROSS SECTIONS - STATE STREET

DRAWING NO.
C-909

CDOT PROJECT D-1-209

DATE: 7/3/2023

REVISION NO.

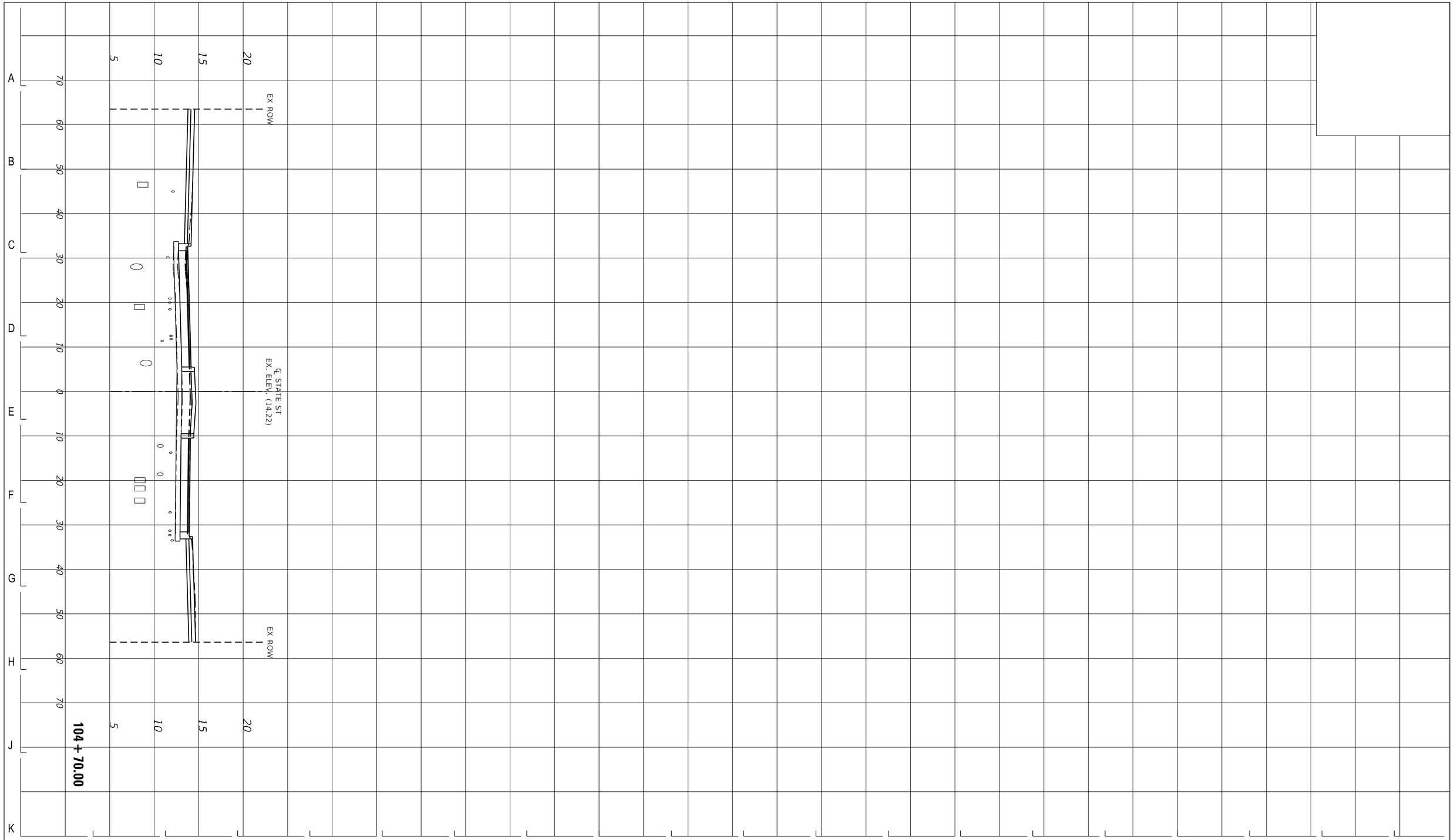

DESIGN BY:										
DRAWN BY:										
CHECKED BY:										
APPROVED BY:		4	7/3/2023	ISSUED FOR BID	EAD	EAD	MJL			
CDOT/APPROVED BY:		NO.	DATE	REVISIONS	DES.	DRW.	CHK.	DCCO	CDOT	

TranSystems
TRANSYSTEMS
222 SOUTH RIVERSIDE PLAZA SUITE 610
CHICAGO, ILLINOIS 60606

SOM
SKIDMORE, OWINGS & MERRILL LLP
224 SOUTH MICHIGAN AVENUE, SUITE 1000
CHICAGO, ILLINOIS 60604

MICHAEL J. LEV
062-055367
LICENSED PROFESSIONAL ENGINEER
ILLINOIS

CDOT
CHICAGO DEPARTMENT OF TRANSPORTATION
DIVISION OF ENGINEERING

STATE / LAKE LOOP ELEVATED STATION
200 NORTH STATE STREET, CHICAGO, IL 60601

SPEC. NO.

CROSS SECTIONS - STATE STREET

DRAWING NO.
C-910

CDOT PROJECT D-1-209

DATE: 7/3/2023

REVISION NO.

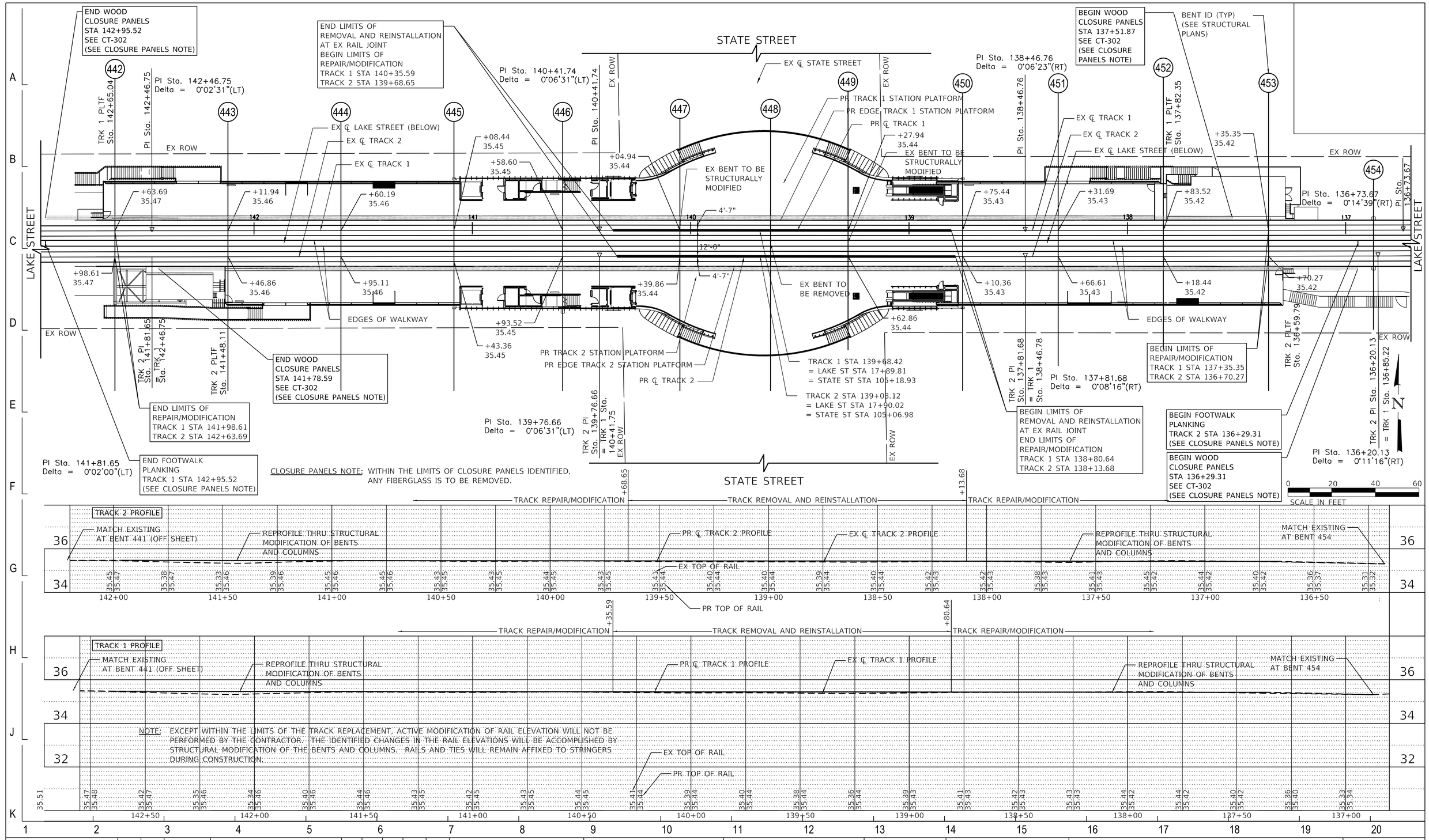

DESIGN BY:									
DRAWN BY:									
CHECKED BY:									
APPROVED BY:		4	7/3/2023	ISSUED FOR BID					
CDOT/APPROVED BY:		NO.	DATE	REVISIONS	DES.	DRW.	CHK.	DCCO	CDOT

TRANSYSTEMS
222 SOUTH RIVERSIDE PLAZA SUITE 610
CHICAGO, ILLINOIS 60606

SKIDMORE, OWINGS & MERRILL LLP
224 SOUTH MICHIGAN AVENUE, SUITE 1000
CHICAGO, ILLINOIS 60604

MICHAEL J. LEV 062-055367 LICENSED PROFESSIONAL ENGINEER ILLINOIS

CHICAGO DEPARTMENT OF TRANSPORTATION
DIVISION OF ENGINEERING

STATE / LAKE LOOP ELEVATED STATION
200 NORTH STATE STREET, CHICAGO, IL 60601

SPEC. NO.

TRACK PLAN AND PROFILE
LAKE/STATE INTERSECTION

DRAWING NO.
CT-101

CDOT PROJECT D-1-209 | DATE: 7/3/2023 | REVISION NO.

HORIZONTAL ALIGNMENT DEFINITIONS

A	DISTANCE BETWEEN CENTERS OF CIRCLE
CC	CENTER OF CIRCLE
CS	CURVE TO SPIRAL
Dc	DEGREE OF CURVE DEFINED BY THE ARC DEFINITION
Ec	EXTERNAL DISTANCE FROM MIDPOINT OF CIRCULAR CURVE TO PIC
I	ANGLE OF INTERSECTION OF MAIN TANGENTS AT PI
Lc	LENGTH OF CIRCULAR CURVE BETWEEN SC AND CS
Ls	LENGTH OF SPIRAL FROM TS TO SC (OR CS TO ST)
L.T.	LONG TANGENT OF SPIRAL; DISTANCE FROM SPI TO TS (OR SPI TO ST)
L.C.	LONG CHORD OF SPIRAL; DISTANCE FROM THE TS TO THE SC (OR CS TO TS)
P	OFFSET FROM PC (OR PT) TO MAIN TANGENT
PC	POINT OF CURVE; ON SPIRALED CURVES THIS POINT IS OFFSET A DISTANCE "P" FROM THE MAIN TANGENT
PCC	POINT OF COMPOUND CURVATURE
PI	POINT OF INTERSECTION OF MAIN TANGENTS
PIC	POINT OF INTERSECTION OF LINES TANGENT AT SC AND CS
SPI	POINT OF INTERSECTION OF MAIN TANGENT AND LINE TANGENT AT SC (OR CS)
POC	POINT ON CURVE
POT	POINT ON TANGENT
PS	POINT OF SWITCH
PT	POINT OF TANGENCY; ON SPIRALED CURVES THIS POINT IS OFFSET A DISTANCE "P" FROM THE MAIN TANGENT
R	RADIUS OF CIRCULAR CURVE
SC	SPIRAL TO CURVE
ST	SPIRAL TO TANGENT
S.T.	SHORT TANGENT OF SPIRAL; DISTANCE FROM SPI TO CS (OR SPI TO SC)
Tc	DISTANCE FROM SC (OR CS) TO PIC IN SPIRALED CURVE, OR TANGENT FROM PC (OR PT) TO PI IN A SIMPLE CURVE
TS	TANGENT TO SPIRAL
K	DISTANCE ALONG MAIN TANGENT FROM TS (OR ST) TO PERPENDICULAR OFFSET OF PC
X_s	DISTANCE ALONG MAIN TANGENT FROM TS (OR ST) TO PERPENDICULAR OFFSET OF SC (OR CS)
Y_s	PERPENDICULAR OFFSET FROM MAIN TANGENT TO CS (OR SC)
Δs	SPIRAL ANGLE; CENTRAL ANGLE OF SPIRAL
Δc	ANGLE OF INTERSECTION OF TANGENTS OF CIRCULAR CURVE

MAIN TANGENTS – THOSE LINES TANGENT TO ALIGNMENT AT TS AND ST WHICH INTERSECT AT PI

SPEED/SUPERELEVATION DEFINITIONS

V	DESIGN SPEED IN MPH
SE	ACTUAL SUPERELEVATION
Ee	EQUILIBRIUM SUPERELEVATION
Eu	UNBALANCED SUPERELEVATION

VERTICAL ALIGNMENT DEFINITIONS

G1	INCOMING GRADE
G2	OUTGOING GRADE
L	LENGTH OF VERTICAL CURVE IN 100 FOOT STATIONS
PVC	POINT OF VERTICAL CURVATURE
PVI	POINT OF VERTICAL INTERSECTION
PVT	POINT OF VERTICAL TANGENCY
r	PERCENT RATE OF CHANGE OF GRADE PER 100 FEET
H	EXTERNAL DISTANCE FROM MIDPOINT OF CIRCULAR CURVE TO THE PVI

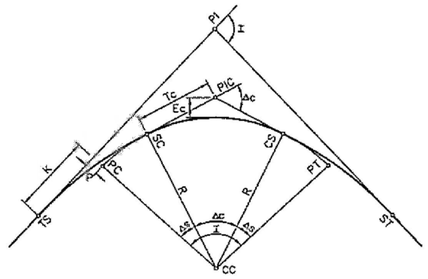

CIRCULAR CURVE WITH SPIRALS

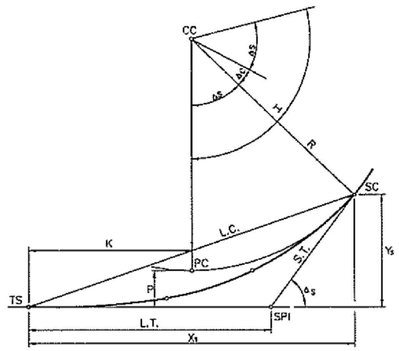

SPIRAL

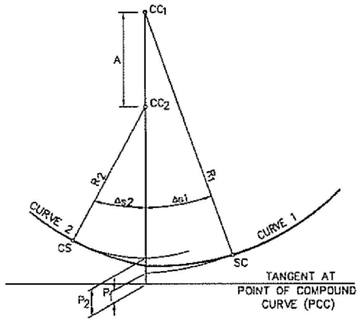

COMPOUND SPIRAL

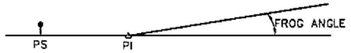

TURNOUT

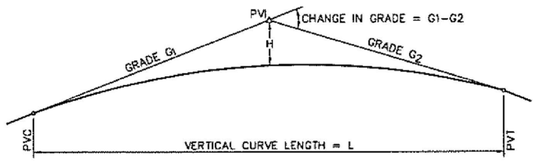

VERTICAL CURVE

DESIGN BY:										
DRAWN BY:										
CHECKED BY:										
APPROVED BY:		4	7/3/2023	ISSUED FOR BID						
CDOT/APPROVED BY:		NO.	DATE	REVISIONS	DES.	DRW.	CHK.	DCCO	CDOT	

TranSystems
TRANSYSTEMS
222 SOUTH RIVERSIDE PLAZA SUITE 610
CHICAGO, ILLINOIS 60606

MICHAEL J. LEV
062-055367
LICENSED PROFESSIONAL ENGINEER
ILLINOIS

CDOT
CHICAGO DEPARTMENT OF TRANSPORTATION
DIVISION OF ENGINEERING

STATE / LAKE LOOP ELEVATED STATION
200 NORTH STATE STREET, CHICAGO, IL 60601

SPEC. NO.

TRACK SYMBOLS AND ABBREVIATIONS

DRAWING NO.
CT-102

CDOT PROJECT D-1-209

DATE: 7/3/2023

REVISION NO.

FOR ARCHITECTURAL DETAILS
SEE ARCHITECTURAL PLANS

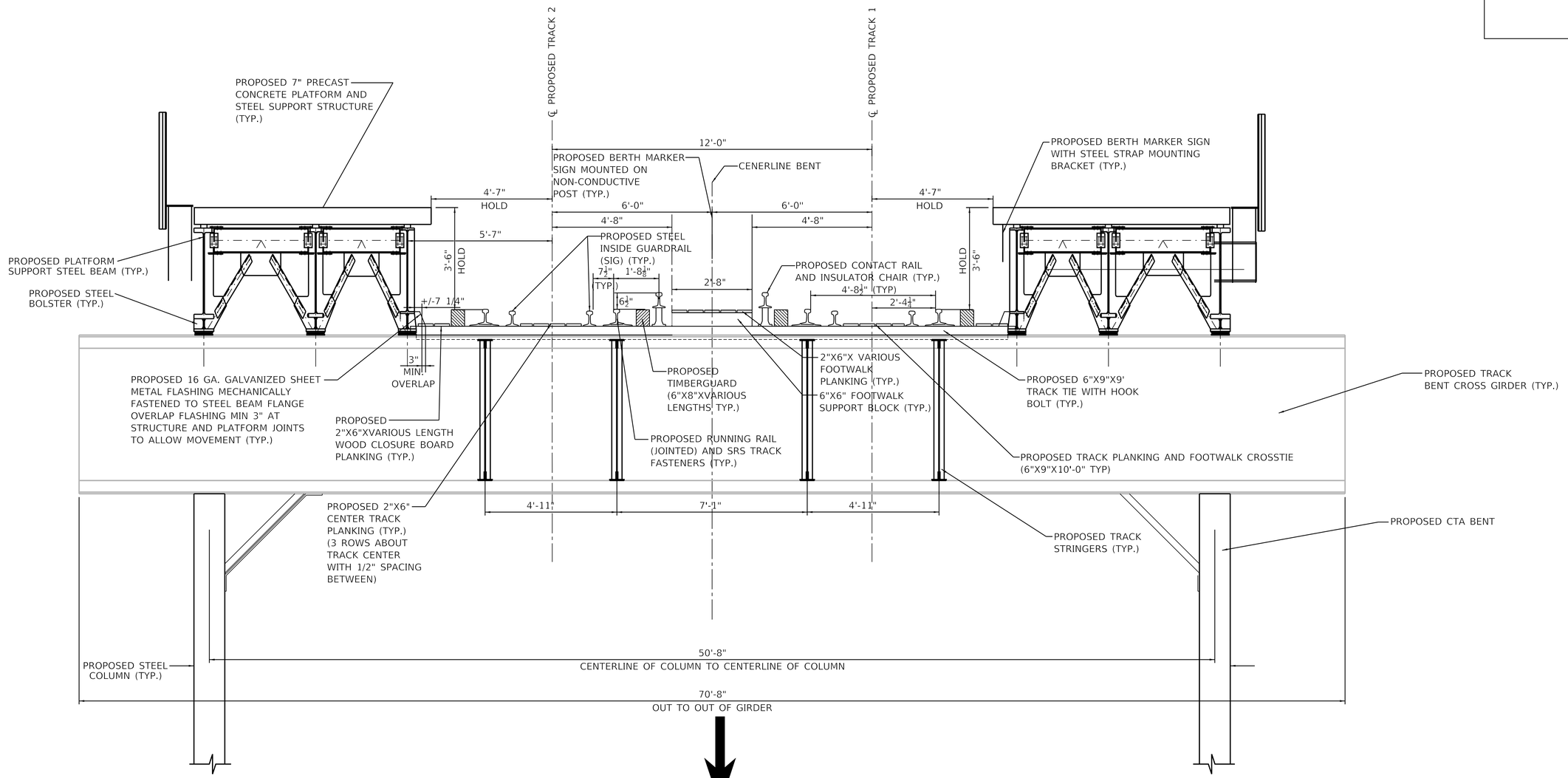

LAKE STREET (EB TRAFFIC ONLY)

PROPOSED TRACK TYPICAL SECTION

REMOVAL AND REINSTALLATION SECTION
LAKE STREET/STATE STREET CTA STATION
LOOKING WEST
NTS

DESIGN BY:										
DRAWN BY:										
CHECKED BY:										
APPROVED BY:		4	7/3/2023	ISSUED FOR BID						
CDOT/APPROVED BY:		NO.	DATE	REVISIONS	DES.	DRW.	CHK.	DCCO	CDOT	

TRANSYSTEMS
222 SOUTH RIVERSIDE PLAZA SUITE 610
CHICAGO, ILLINOIS 60606

SKIDMORE, OWINGS & MERRILL LLP
224 SOUTH MICHIGAN AVENUE, SUITE 1000
CHICAGO, ILLINOIS 60604

MICHAEL J. LEVI
062-055367
LICENSED PROFESSIONAL ENGINEER
ILLINOIS

CHICAGO DEPARTMENT OF TRANSPORTATION
DIVISION OF ENGINEERING

STATE / LAKE LOOP ELEVATED STATION
200 NORTH STATE STREET, CHICAGO, IL 60601

SPEC. NO.

TRACK REPLACEMENT TYPICAL SECTION

DRAWING NO.
CT-301

CDOT PROJECT D-1-209

DATE: 7/3/2023

REVISION NO.

NOTE:

IN ADDITION TO THE IDENTIFIED TRACK RECONSTRUCTION, THE CONTRACTOR MUST ALSO REPAIR THE TRACK WITHIN THE LIMITS OF THE STATION WHICH IS NOT BEING REPLACED. SPECIFIC AREAS OF REPAIR WILL BE IDENTIFIED BY THE COMMISSIONER. FOR THE PURPOSE OF BIDDING, THE CONTRACTOR MAY ASSUME THE FOLLOWING REPAIRS OR REPLACEMENTS:

10 REPLACEMENT RAIL JOINTS
20 REPLACEMENT RAIL JOINT BOLTS
25 REPLACEMENT TIES, INCLUDING RESILIENT FASTENERS
10 REPLACEMENT RESILIENT FASTENERS
15 REPLACEMENT RESILIENT FASTENER SETS
50 REPLACEMENT 6"X8"X8' TIMBER GUARD, INCLUDING SCREWS
15 REPLACEMENT TIMBER GUARD LAG SCREWS

FOR ARCHITECTURAL DETAILS
SEE ARCHITECTURAL PLANS

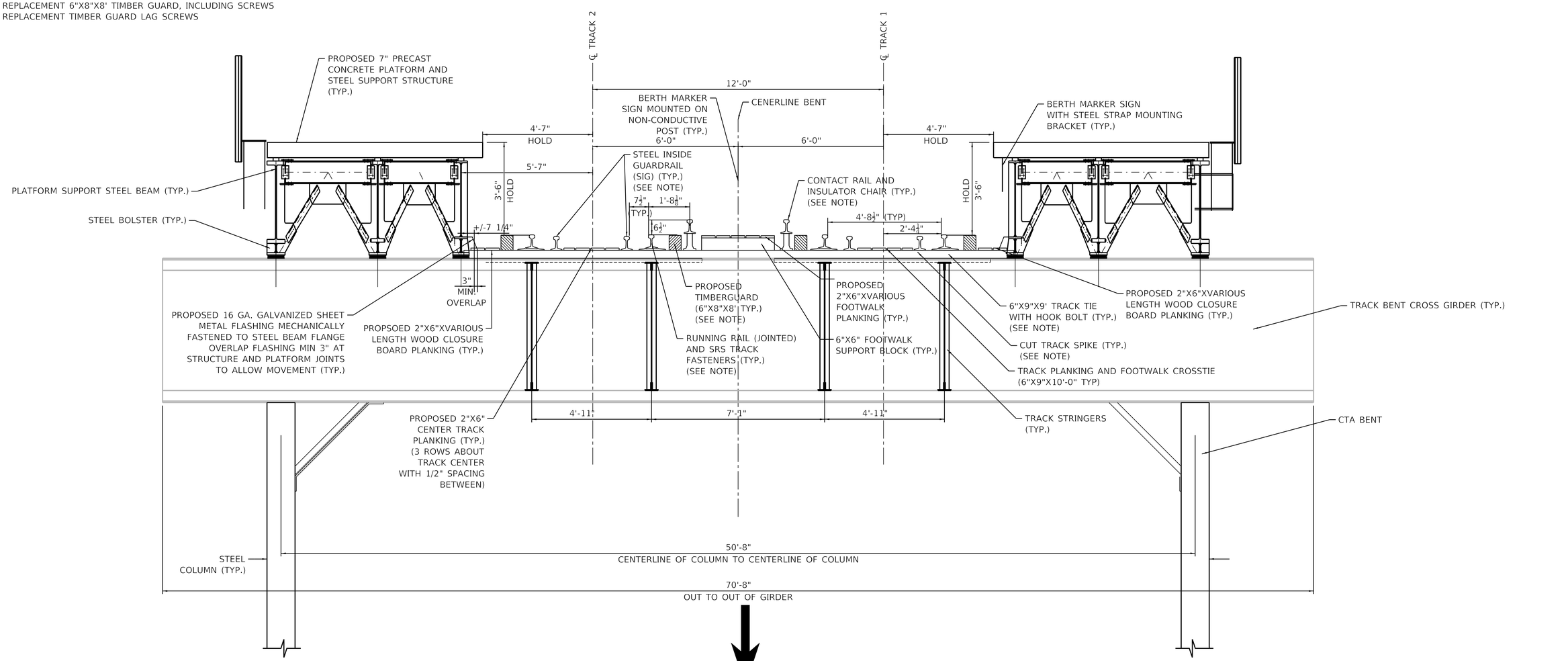

LAKE STREET (EB TRAFFIC ONLY)

PROPOSED TRACK TYPICAL SECTION

REPAIR/MODIFICATION SECTION
LAKE STREET/STATE STREET CTA STATION
LOOKING WEST
NTS

DESIGN BY:										
DRAWN BY:										
CHECKED BY:										
APPROVED BY:		4	7/3/2023	ISSUED FOR BID						
CDOT/APPROVED BY:		NO.	DATE	REVISIONS	DES.	DRW.	CHK.	DCCO	CDOT	

TRANSYSTEMS
222 SOUTH RIVERSIDE PLAZA SUITE 610
CHICAGO, ILLINOIS 60606

SKIDMORE, OWINGS & MERRILL LLP
224 SOUTH MICHIGAN AVENUE, SUITE 1000
CHICAGO, ILLINOIS 60604

MICHAEL J. LEVI
062-055367
LICENSED PROFESSIONAL ENGINEER
ILLINOIS

CHICAGO DEPARTMENT OF TRANSPORTATION
DIVISION OF ENGINEERING

STATE / LAKE LOOP ELEVATED STATION
200 NORTH STATE STREET, CHICAGO, IL 60601

TRACK REPAIR/MODIFICATION TYPICAL SECTION

CDOT PROJECT D-1-209

DATE: 7/3/2023

SPEC. NO.

DRAWING NO. CT-302

REVISION NO.

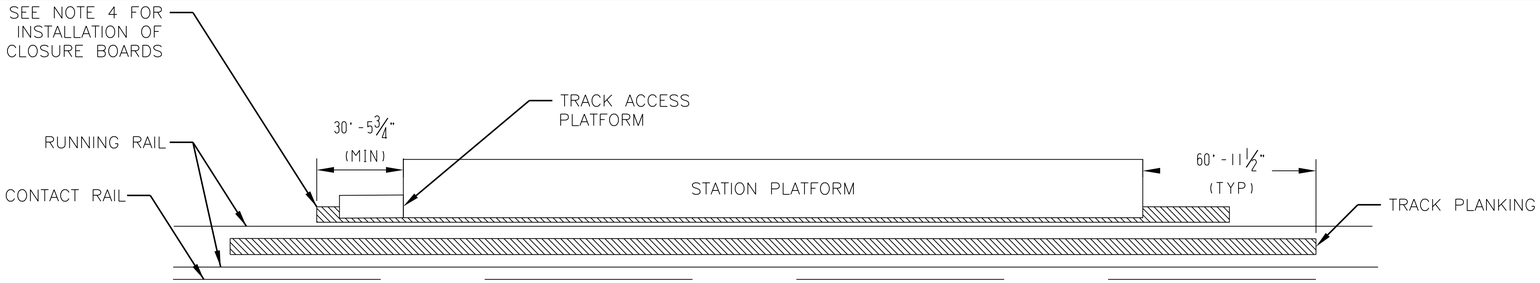

1 MODEL **STATION AREA**
SCALE: NTS

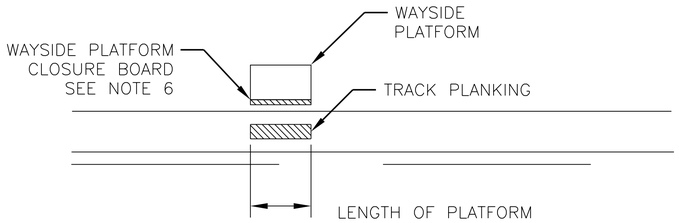

2 MODEL **WAYSIDE PLATFORM**
SCALE: NTS

LEGEND

- TRACK PLANKING
- RAISED WOOD FOOTWALK
- RAMP TRANSITION FROM RAISED FOOTWALK TO TRACK PLANKING
- FIBERGLASS GRATING
- CONTACT RAIL

NOTES:

1. PROVIDE AND INSTALL ALL MATERIALS FOR PLANKING (HANDRAILS, TIMBER PLANKING AND FASTENINGS).
2. RUN PLANKING TO WITHIN APPROXIMATELY 3" OF ANY TRACK FASTENING ITEM (FOR EXAMPLE: STEEL INSIDE GUARD RAIL, TRACK SPIKES, END OF A TIE PLATE, CONTACT RAIL CHAIR, TIMBER GUARD, ETC).
3. CUT OUT AREAS OF PLANKING AS REQUIRED TO CLEAR EQUIPMENT MOUNTED IN TRACK SUCH AS SWITCH MACHINES, SIGNAL BONDS ETC.
4. CLOSURE BOARDS ARE TO EXTEND TO THE END OF THE TRACK ACCESS PLATFORM AT EACH END OF THE STATION PLATFORM BUT NOT LESS THAN 10' BEYOND THE END OF THE STATION PLATFORM.
5. SUBMIT METHOD AND MANNER OF FASTENING PLANKING TO TIMBER TIES FOR CTA APPROVAL.
6. WHOLE WIDTH CLOSURE BOARDS ARE TO BE FURNISHED AND INSTALLED AS NECESSARY AT THE FOLLOWING LOCATIONS; WAYSIDE PLATFORMS TO FILL SPACE BETWEEN THE TIMBER GUARD AND THE PLATFORM, CONTACT RAIL SECTION AND LAP RAIL GAPS TO FILL SPACE BETWEEN THE FOOTWALK AND TIMBER GUARD.

DESIGN BY:										
DRAWN BY:										
CHECKED BY:										
APPROVED BY:		4	7/3/2023	ISSUED FOR BID						
CDOT/APPROVED BY:		NO.	DATE	REVISIONS	DES.	DRW.	CHK.	DCCO	CDOT	

TRANSYSTEMS
222 SOUTH RIVERSIDE PLAZA SUITE 610
CHICAGO, ILLINOIS 60606

MICHAEL J. LEV 062-055367 LICENSED PROFESSIONAL ENGINEER ILLINOIS

CHICAGO DEPARTMENT OF TRANSPORTATION
DIVISION OF ENGINEERING

STATE / LAKE LOOP ELEVATED STATION
200 NORTH STATE STREET, CHICAGO, IL 60601

PLANKING PLAN AND NOTES

CDOT PROJECT D-1-209 | DATE: 7/3/2023

SPEC. NO.

DRAWING NO. CT-501

REVISION NO.

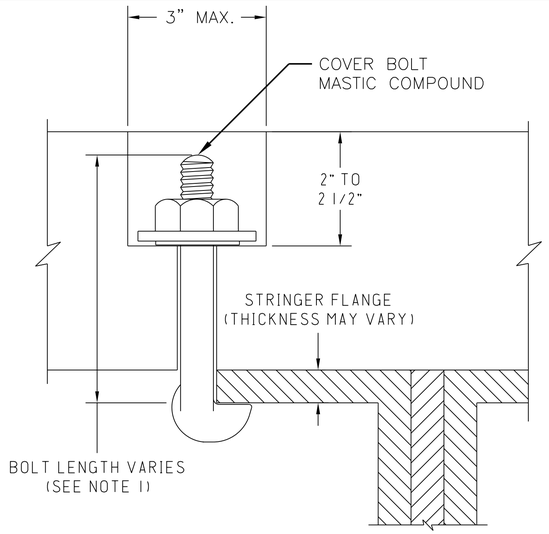

NOTES:

1. HOOK BOLT LENGTH TO BE SIZED TO ALLOW END OF BOLT TO BE 7/8" (± 1/4") BELOW TOP OF TIE.
2. WHEN INSTALLED SNUG TO THE TIE, THE TOP OF THE NUT SHALL PROVIDE FOR A MINIMUM OF TWO THREADS TO PROTRUDE ABOVE THE TOP NUT FACE.

HOOK BOLT DETAIL

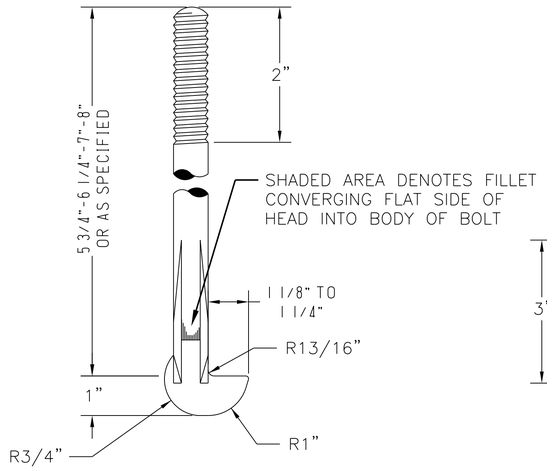

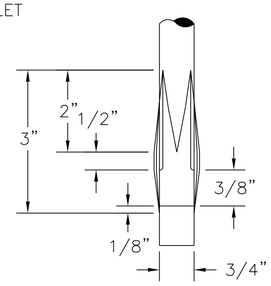

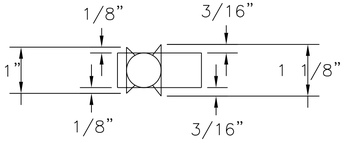

NOTES:

1. HOOK BOLT IS TO BE INSTALLED TIGHT AGAINST THE STEEL FLANGE.
2. HOLE TO RECEIVE THE NUT AND WASHER IS TO BE COUNTERBORED AND THE EXPOSED WOOD IS TO BE COATED WITH A PRESERVATIVE TREATMENT. COUNTERBORE HOLE IS TO BE FILLED WITH A NON-SHRINKING ROOFING CEMENT COMPOUND AFTER INSTALLATION OF HOOK BOLT.

HOOK BOLT

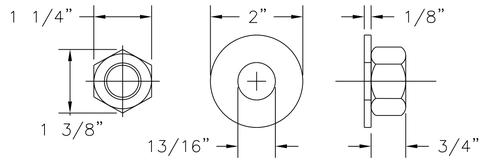

HEX NUT ASSY.

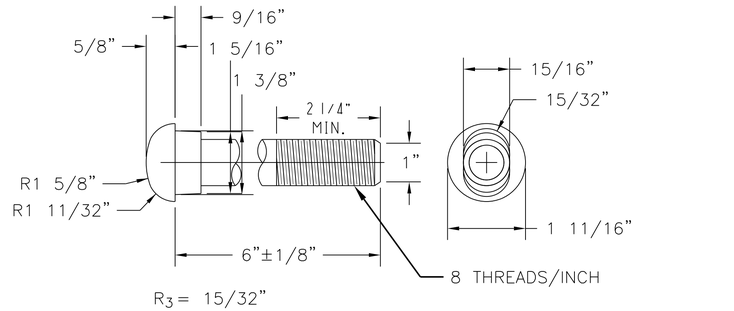

NOTES:

1. SCREW THREADS ON TRACK BOLTS ARE TO CONFORM TO THE AMERICAN STANDARD COARSE THREAD SERIES, WITH FIT AS SPECIFIED. THEY MAY BE FORMED BY CUTTING OR ROLLING.
2. USE 1"x 6" TRACK BOLTS WITH 100#, 112# AND 115 RE RAIL SECTIONS.
3. USE 1"x 5 1/2" TRACK BOLTS FOR 90# STEEL INSIDE GUARD RAIL.

1" OVAL NECK TRACK BOLT

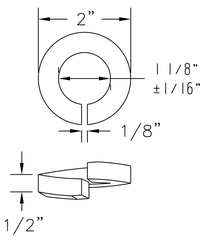

NOTES:

1. SPRING LOCK WASHER IS TO BE FABRICATED FROM SPRING STEEL AS SPECIFIED IN THE MOST RECENT VERSION OF AREMA MANUAL FOR RAILWAY ENGINEERING, VOLUME 1.
2. EDGES OF WASHER ARE TO BE FINISHED WITH A 1/4" BEVEL ON TOP AND BOTTOM. ALL SIDES ARE TO BE FINISHED CLEAN AND BE FREE OF DEFECTS.

SPRING LOCK WASHER

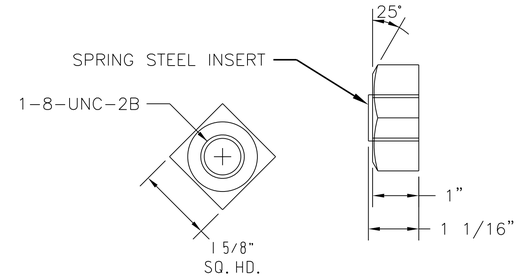

NOTE:

TO BE USED FOR BOTH RUNNING RAIL AND STEEL INNER GUARD RAIL JOINT ASSEMBLIES.

SECURITY LOCK NUT

DESIGN BY:										
DRAWN BY:										
CHECKED BY:										
APPROVED BY:		4	7/3/2023	ISSUED FOR BID						
CDOT/APPROVED BY:		NO.	DATE	REVISIONS	DES.	DRW.	CHK.	DCCO	CDOT	

TranSystems
TRANSYSTEMS
222 SOUTH RIVERSIDE PLAZA SUITE 610
CHICAGO, ILLINOIS 60606

MICHAEL J. LEU
062-055367
LICENSED PROFESSIONAL ENGINEER
ILLINOIS

CDOT
CHICAGO DEPARTMENT OF TRANSPORTATION
DIVISION OF ENGINEERING

STATE / LAKE LOOP ELEVATED STATION
200 NORTH STATE STREET, CHICAGO, IL 60601

OTHER TRACK MATERIALS DETAILS

SPEC. NO.

DRAWING NO. CT-502

CDOT PROJECT D-1-209

DATE: 7/3/2023

REVISION NO.

NOTE:

"SEALTITE" OR CTA APPROVED EQUAL LAG SCREW IS TO BE MADE OF HIGH COPPER BEARING FORGED STEEL; WITH WASHER-HEAD COMBINATION; SLIGHT DRAFT INSIDE OF HEAD TO PREVENT STICKING IN DIE; CUT THREAD AND 60° ANGLE GIMLET POINT.

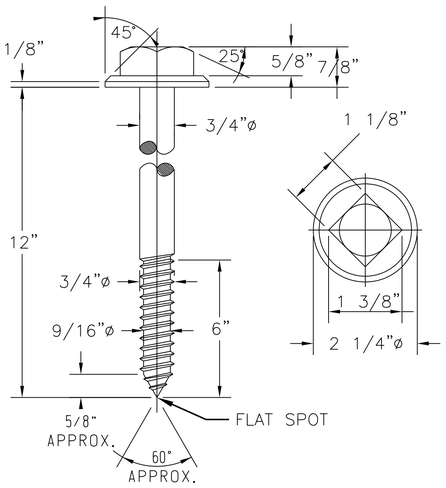

3/4"ø LAG SCREW

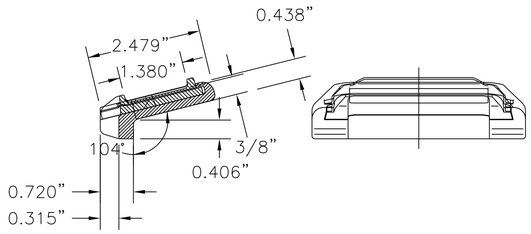

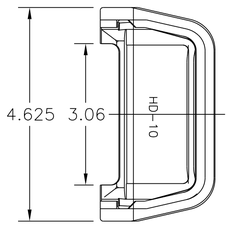

NOTES:

1. REPRINTED WITH PERMISSION OF PANDROL USA, LP.
2. HEAVY DUTY INSULATOR MATERIAL IS TO BE NYLON OR OTHER MATERIAL SPECIFIED BY THE ENGINEER.
3. APPROXIMATE WEIGHT = 1.4 OZ.
4. UNSPECIFIED RADII TO BE 0.06"

HEAVY DUTY NYLON INSULATOR

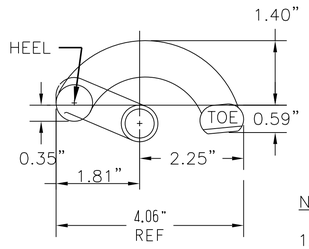

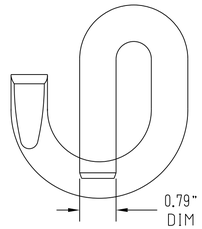

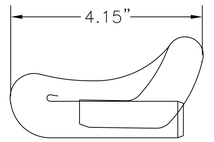

NOTES:

1. BASIS OF DESIGN CORRESPONDS TO PANDROL PART e-2055. CTA APPROVED EQUAL MAY ALSO BE USED.
2. THE BEARING AREA OF THE TOE OF EACH FASTENER, BOTH STANDARD AND OPPOSITE, IS TO BE NO LESS THAN SEVEN TENTHS (0.70") INCHES.
3. THE WEIGHT OF EACH FASTENER, BOTH STANDARD AND OPPOSITE, IS TO BE APPROXIMATELY ONE AND THREE QUARTERS (1.75 LBS) AFTER COATINGS HAVE BEEN APPLIED
4. FOR SPECIALTY FASTENERS SUCH AS FOR RAIL JOINTS, SUBMIT SHOP DRAWINGS FOR PROPOSED FASTENER DESIGNS AND LOCATIONS WHERE FASTENER IS INTENDED TO BE USED.

RESILIENT FASTENER

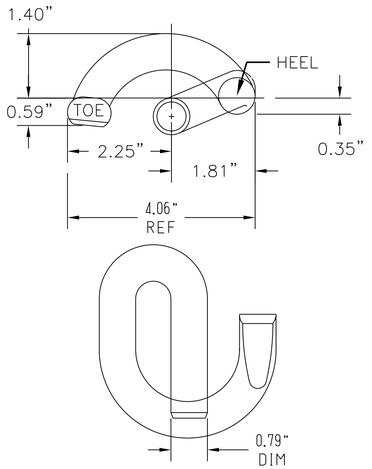

NOTES:

1. OPPOSITE RESILIENT FASTENER IS TO BE COLORED GREEN. NO SHADE OF YELLOW IS ACCEPTABLE.
2. THIS PART CORRESPONDS TO THE PANDROL PART e-2056.

RESILIENT FASTENER (OPP. HAND)

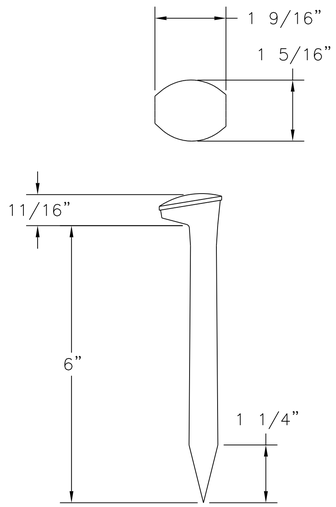

5/8" X 6" SPIKE

NOTES:

1. INSTALL TWO TRACK MARKERS AT 100FT INTERVALS OF TRACK STATIONING- ONE EACH ON THE INSIDE FACE OF THE OUTSIDE TIMBER GUARD OF EACH TRACK FACING THE CENTER BETWEEN TRACKS.
2. CHAINING/STATIONING SHOWN ON TRACK DRAWINGS MAY DIFFER FROM EXISTING TRACK MARKER SIGNS IN FIELD. NEW TRACK MARKERS ARE TO BE INSTALLED USING SURVEYED CHAINING/STATIONING AND NOT EXISTING TRACK MARKER INSTALLATION.
3. REMOVE AND LEGALLY DISPOSE OF ALL EXISTING TRACK MARKER SIGNS AND MOUNTING HARDWARE.
4. SUBMIT INSTALLATION PLAN FOR APPROVAL PRIOR TO INSTALLING TRACK MARKERS.
5. SIGNS ARE TO BE PORCELAIN-ENAMELED STEEL AND HOLES SHALL HAVE GROMMETS INSTALLED PER SPECIFICATIONS. LETTERS SHALL BE 3" IN HEIGHT.

PORCELAIN TRACK MARKER

DESIGN BY:										
DRAWN BY:										
CHECKED BY:										
APPROVED BY:		4	7/3/2023	ISSUED FOR BID						
CDOT/APPROVED BY:		NO.	DATE	REVISIONS	DES.	DRW.	CHK.	DCCO	CDOT	

TRANSYSTEMS
222 SOUTH RIVERSIDE PLAZA SUITE 610
CHICAGO, ILLINOIS 60606

MICHAEL J. LEV
062-055367
LICENSED PROFESSIONAL ENGINEER
ILLINOIS

CDOT
CHICAGO DEPARTMENT OF TRANSPORTATION
DIVISION OF ENGINEERING

STATE / LAKE LOOP ELEVATED STATION
200 NORTH STATE STREET, CHICAGO, IL 60601

OTHER TRACK MATERIALS DETAILS

CDOT PROJECT D-1-209 | DATE: 7/3/2023

SPEC. NO.

DRAWING NO. CT-503

REVISION NO.

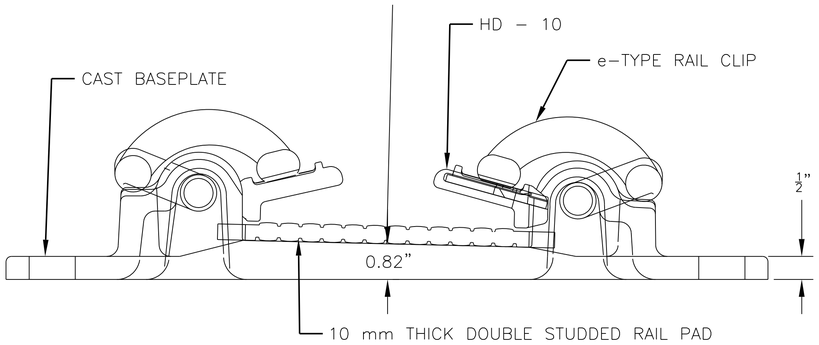

2 MODEL **SECTION VIEW**
NOT TO SCALE

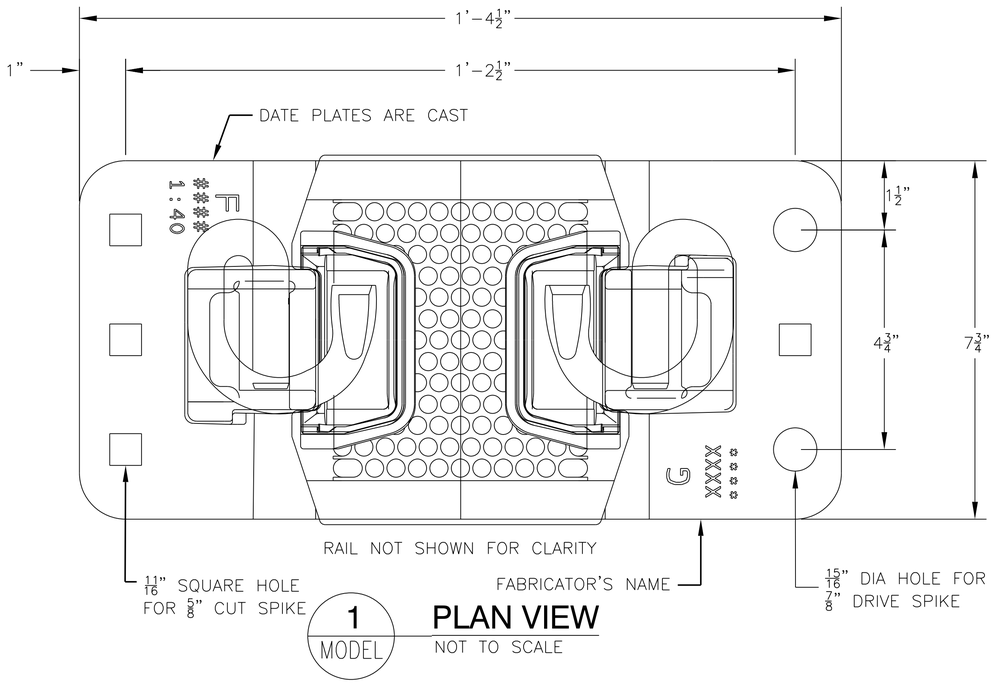

1 MODEL **PLAN VIEW**
NOT TO SCALE

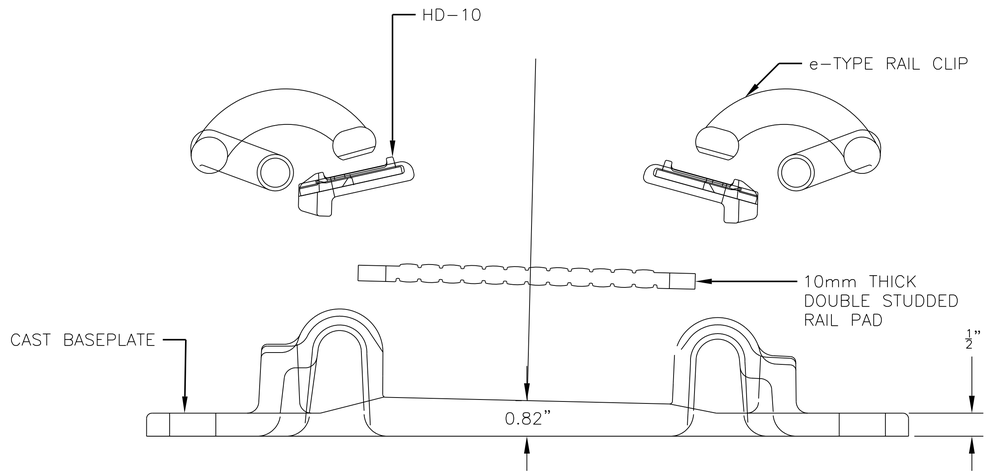

3 MODEL **EXPLODED VIEW**
NOT TO SCALE

ITEM	DESCRIPTION	QTY
1	RIGHT HAND e–TYPE CLIP GALVANIZED	1
2	LEFT HAND e–TYPE CLIP GALVANIZED GREEN	1
3	HEAVY DUTY INSULATOR (HD–10)	2
4	10mm THICK DOUBLE STUDDED RAIL PAD	1
5	CAST BASE PLATE	1

NOTES:

1. GAUGE SIDE OF PLATE MUST BE PERMANENTLY MARKED WITH THE LETTER "G" ON THE TOP SIDE OF THE PLATE.

2. FIELD SIDE OF PLATE MUST BE PERMANENTLY MARKED WITH THE LETTER "F" ON THE TOP SIDE OF THE PLATE.

3. THIS DRAWING DETAILS THE COMPONENTS AND SHOWS THE FIT OF THE COMPONENTS INTO AND ASSEMBLY FOR THEIR INTENDED USE AND DOES NOT INDICATE THAT EACH ORDER WILL BE FOR A FULL ASSEMBLY.

4. CAST PLATES FURNISHED WITH 6 SQUARE HOLES ARE SHOWN ALONG THE LEFT SIDE IN PLAN VIEW 1, AND 4 ROUND HOLES WITH 2 SQUARE HOLES ALONG THE RIGHT SIDE OF THE PLATE IN PLAN VIEW 1.

5. PLATE SHIMS USED FOR TRANSITIONS OR VERTICAL ALIGNMENT MODIFICATIONS ARE TO BE TACK WELDED TO SHORT ENDS OF THE PLATE AFTER INSTALLATION.

6. ATTACH TO WOOD TIES WITH 4 CUT SPIKES PER FASTENER. ATTACH TO COMPOSITE PLASTIC TIES WITH 4 SCREW SPIKES PER FASTENER.

DESIGN BY:										
DRAWN BY:										
CHECKED BY:										
APPROVED BY:		4	7/3/2023	ISSUED FOR BID						
CDOT/APPROVED BY:		NO.	DATE	REVISIONS	DES.	DRW.	CHK.	DCCO	CDOT	

TRANSYSTEMS
222 SOUTH RIVERSIDE PLAZA SUITE 610
CHICAGO, ILLINOIS 60606

MICHAEL J. LEV
062-055367
LICENSED PROFESSIONAL ENGINEER
ILLINOIS

CDOT
CHICAGO DEPARTMENT OF TRANSPORTATION
DIVISION OF ENGINEERING

STATE / LAKE LOOP ELEVATED STATION
200 NORTH STATE STREET, CHICAGO, IL 60601

SRS TRACK FASTENING
COMPONENTS AND ASSEMBLY

CDOT PROJECT D-1-209

DATE: 7/3/2023

SPEC. NO.

DRAWING NO.
CT-504

REVISION NO.

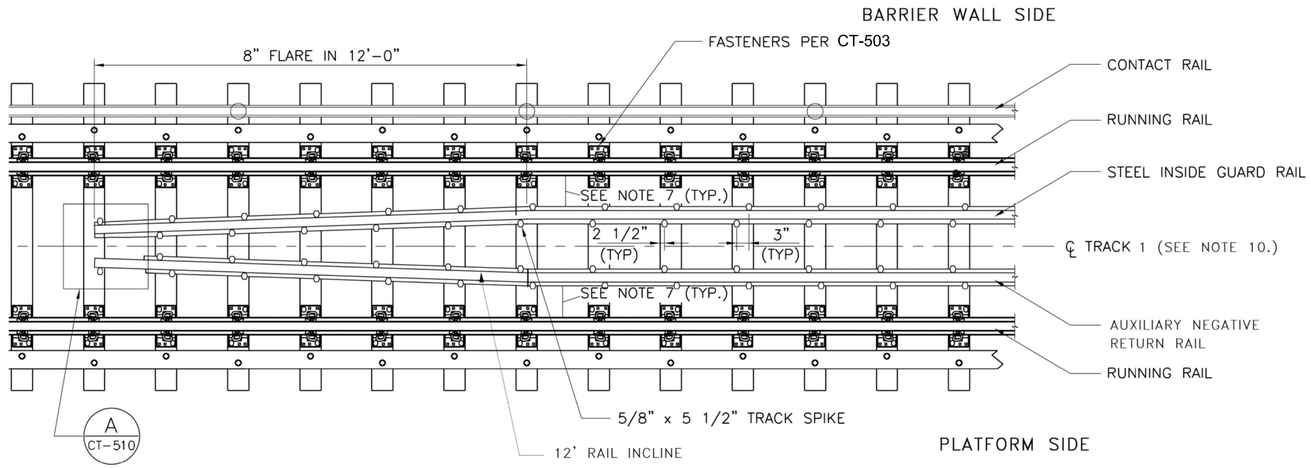

1 CT-510 DOUBLE STEEL INSIDE GUARD RAIL FLARE DETAIL

SCALE: N.T.S.

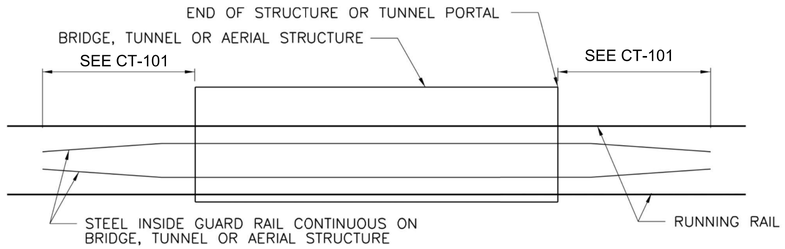

2 CT-510 STEEL INSIDE GUARD RAIL LOCATIONS

SCALE: N.T.S.

CUT TRIANGLE a–b–c OUT OF WEB,
BEND BALL OF RAIL VERTICALLY TO BASE.

A CT-510 ELEVATION – GUARD RAIL TERMINATION DETAIL

SCALE: N.T.S.

NOTES:

1. THE STEEL INSIDE GUARD (SIG) RAIL SHALL BE SECURED TO EACH TIE USING TWO (2) 5/8" X 5-1/2" CUT SPIKES PER TIE PER RAIL ON OPPOSITE SIDES OF RAIL AND STAGGERED AS SHOWN.
2. THE HEAD OF THE CUT SPIKES SHALL BE TURNED SO THAT THE LARGE FLANGE IS TOWARD THE RAIL AND NO SPIKE SHALL BE DRIVEN DOWN TO CONTACT WITH THE BASE OF THE RAIL. THE SIG MUST BE ALLOWED TO MOVE ALONG THE TIES AT ITS OWN RATE SEPARATE FROM THE RUNNING RAIL.
3. WHEN JOINTS ARE REQUIRED TO CONNECT THE SIG, THE CUT SPIKES SHALL BE DRIVEN AT AN ANGLE THAT ENSURES THE JOINT BARS WILL NOT SNAG ONTO THE SPIKES AS THE SIG MOVES. NO SPIKES SHALL BE INSTALLED AT OR WITHIN 12" OF A SIG JOINT.
4. EVERY JOINT ALONG THE SIG SHALL BE BONDED ACROSS USING A 13" LONG STRANDED COPPER BOND WITH "T" BARS CONNECTED TO THE ROPELAY COPPER. THE BONDS SHALL BE WELDED ONTO THE FIELD SIDE OF THE HEAD OF THE SIG AT A LOCATION WHERE NO BOND HAS BEEN PREVIOUSLY WELDED.
5. THE SIG SHALL BE BONDED TO EACH BENT THE SIG CROSSES. THE PAINT MUST BE REMOVED FROM THE BENT TO ALLOW A PROPER CONNECTION. THE PAINT ON THE BEND MUST BE TOUCHED UP TO SEAL THE STEEL. SOME GRINDING MAY BE NECESSARY TO CLEAN RUST FROM THE SURFACE OF THE BENT. NO BOND SHALL BE WELDED ONTO A RUSTY SEGMENT OF A BENT OR SIG.
6. ALL OLD BONDS SHALL BE REMOVED FROM THE SIG. ONLY NEW BONDS ON THE JOINTS SHALL BE ALLOWED TO REMAIN ON THE SIG.
7. THE SIG SHALL BE FURNISHED AND INSTALLED WITH NO EXPANSION GAPS INSTALLED. THE NATURAL BREAKS AT THE CURVES AND SPECIAL TRACKWORK SHALL PROVIDE THE SIG WITH SPACE NECESSARY TO ACCEPT EXPANSION. THE SIG SHALL TERMINATE 3 FEET FROM THE POINT OF ANY SWITCH AND 3 FEET FROM ANY DIRECT FIXATION ANGLE OBSTRUCTION.
8. IN ORDER TO FABRICATE THE END OF THE SIG, THE RAIL MAY BE TORCH CUT AS NECESSARY TO CREATE THE TAPER INDICATED.
9.
10. MIRROR IMAGE FOR TRACK 2.

DESIGN BY:										
DRAWN BY:										
CHECKED BY:										
APPROVED BY:		4	7/3/2023	ISSUED FOR BID						
CDOT/APPROVED BY:		NO.	DATE	REVISIONS	DES.	DRW.	CHK.	DCCO	CDOT	

TRANSYSTEMS
222 SOUTH RIVERSIDE PLAZA SUITE 610
CHICAGO, ILLINOIS 60606

MICHAEL J. LEVI 062-055367 LICENSED PROFESSIONAL ENGINEER ILLINOIS

CDOT
CHICAGO DEPARTMENT OF TRANSPORTATION
DIVISION OF ENGINEERING

STATE / LAKE LOOP ELEVATED STATION
200 NORTH STATE STREET, CHICAGO, IL 60601

SPEC. NO.

STEEL INSIDE GUARD RAIL
PLAN AND DETAILS

DRAWING NO.
CT-505

CDOT PROJECT D-1-209 | DATE: 7/3/2023 | REVISION NO.

MAINTENANCE OF TRAFFIC AND DETOUR NOTES

1. TEMPORARY TRAFFIC CONTROL SIGNS MUST BE INSTALLED AT THE DIRECTION AND UNDER THE SUPERVISION OF THE COMMISSIONER. SEVEN (7) DAYS NOTICE MUST BE GIVEN TO THE COMMISSIONER FOR DIRECTION OF SIGNING. THE CONTRACTOR MUST COORDINATE THE MAINTENANCE OF TRAFFIC WITH LANE CLOSURES OF CONCURRENT PROJECTS.
2. DURING CONSTRUCTION OPERATIONS, THE CONTRACTOR MUST TAKE ALL NECESSARY PRECAUTIONS TO PROTECT ADJACENT TRAFFIC LANES OPEN TO TRAFFIC FROM DEBRIS BEING BLOWN OR OTHERWISE REMOVED FROM THE CONSTRUCTION AREAS. THE CONTRACTOR WILL ALSO BE RESPONSIBLE FOR KEEPING DEBRIS OFF THE ADJACENT TRAVELED LANE SURFACE.
3. THE CONTRACTOR MUST REMOVE ALL EXISTING PAVEMENT MARKINGS THAT CONFLICT WITH THE DESIGNATED TRAFFIC CONTROL PLAN. THE CONTRACTOR MUST RESTORE ALL PAVEMENT MARKINGS DESTROYED DURING CONSTRUCTION.
4. ALL CONSTRUCTION SIGNS, BARRICADES, BARRIER WALL, LIGHTS, FLAGGERS (EXCLUDING ALL CTA TRACK LEVEL FLAGGERS), ETC. MUST BE PROVIDED BY THE CONTRACTOR.
5. ALL SIGNS MUST MEET CITY AND THE MANUAL ON UNIFORM TRAFFIC CONTROL DEVICES STANDARDS AND MUST MEET WITH THE APPROVAL OF THE DIVISION OF INFRASTRUCTURE MANAGEMENT AND/OR OEMC REGARDING LOCATION, TYPE, SIZE, NUMBER, AND DURATION OF PLACEMENT.
6. ALL SIDEWALK CLOSURES MUST FOLLOW CDOT STANDARDS FOR CROSSWALK AND SIDEWALK CLOSURE. THE SIDEWALK MUST REMAIN OPEN AT ALL TIMES. THE CONTRACTOR MUST MAINTAIN PEDESTRIAN ACCESS TO ADJACENT PROPERTIES AND FOR ANY TEMPORARY ADA CURB RAMPS BY INSTALLING DISABLED-ACCESSIBLE PLYWOOD WALKWAYS WITH HANDRAILS AS DIRECTED BY THE COMMISSIONER. PEDESTRIAN ACCESS TO PROPERTIES WITHIN THE WORK ZONE MUST BE MAINTAINED AT ALL TIMES. IF TEMPORARY CROSSWALK RELOCATIONS ARE NECESSARY, THE CONTRACTOR MUST INSTALL TEMPORARY PAVEMENT MARKINGS.
7. ALL EXISTING SIGNAGE IN CONFLICT WITH TRAFFIC CONTROL SIGNAGE MUST BE TEMPORARILY COVERED.
8. THE CONTRACTOR MUST PROVIDE AND INSTALL TWO (2) SANDBAGS ON EACH TYPE I OR TYPE II BARRICADE USED - ONE (1) SANDBAG ACROSS EACH BOTTOM RAIL. FOUR (4) SANDBAGS MUST BE USED ON TYPE III BARRICADES.
9. NOTIFY BUSINESSES AND PUBLIC ON CONSTRUCTION ACTIVITIES TWO (2) WEEKS PRIOR TO START OF CONSTRUCTION.
10. CONTRACTOR SHALL PROVIDE 30 DAY NOTICE TO THE COMMISSIONER AND ANY BUSINESS WITH STATE STREET ACCESS PRIOR TO ANY STATE STREET CLOSURE OR LANE REDUCTIONS.
11. DETAILS OF ANY LANE OR ROADWAY CLOSURES INCLUDING DETOUR PLANS MUST BE REVIEWED AND APPROVED BY THE COMMISSIONER.
12. THE CONTRACTOR MUST CONTACT THE COMMISSIONER BEFORE ANY PAVEMENT MARKINGS ARE PLACED. REMOVAL OF CONFLICTING AND PLACEMENT OF NEW OR TEMPORARY PAVEMENT MARKINGS ASSOCIATED WITH CONSTRUCTION STAGE CHANGES IS THE RESPONSIBILITY OF THE CONTRACTOR.
13. THE COMMISSIONER WILL DETERMINE THE LOCATIONS OF ALL SIGNS THAT ARE DIRECTLY OR INDIRECTLY INVOLVED WITH THE PROJECT.
14. ALL TEMPORARY REGULATORY, WARNING, AND GUIDE SIGNS WITHIN THE PROPOSED IMPROVEMENT SHALL BE RELOCATED BY THE CONTRACTOR AS DIRECTED BY THE COMMISSIONER.
15. ALL TEMPORARY BARRIER WALLS MUST BE PINNED INTO THE EXISTING PAVEMENT IF NECESSARY PER IDOT HIGHWAY STANDARD 704001 AND SAFETY ENGINEERING POLICY MEMORANDUM 4-15.
16. ALL PEDESTRIAN WALKWAYS ADJACENT TO CONSTRUCTION SHALL MAINTAIN A MINIMUM WIDTH OF 6', MAINTAIN A MINIMUM CLEARANCE OF 7', AND SHALL BE COVERED WITH STRUCTURAL PROTECTION DURING ALL PHASES OF OVERHEAD STRUCTURAL CONSTRUCTION. REFER TO BARRICADE DETAIL SHEETS.
17. CONTRACTOR IS REQUIRED TO PROVIDE AND COORDINATE FIRE LANE ACCESS AT ALL TIMES, WITH THE COMMISSIONER AND THE FIRE DEPARTMENT BUREAU OF FIRE PREVENTION.
18. CROSS STREETS (DEARBORN, WABASH, WACKER, RANDOLPH) MUST REMAIN FULLY OPEN, UNLESS OTHERWISE GRANTED BY THE COMMISSIONER. PARTIAL LANE CLOSURES MAY BE PROVIDED AT THE DISCRETION OF THE COMMISSIONER.
19. CONTRACTOR VEHICLES SHALL ALWAYS MOVE WITH AND NOT AGAINST OR ACROSS THE FLOW OF TRAFFIC. CONTRACTOR VEHICLES SHALL ENTER OR LEAVE WORK AREAS IN A MANNER WHICH WILL NOT BE HAZARDOUS OR INTERFERE WITH NORMAL TRAFFIC AND SHALL NOT PARK OR STOP EXCEPT WITHIN DESIGNATED WORK AREAS.
20. CONTRACTOR SHALL FOLLOW THE CONSTRUCTION TRAFFIC ROUTES AS DETERMINED BY THE COMMISSIONER TO REDUCE IMPACTS TO THE EXISTING NEIGHBORHOOD.
21. CONTRACTOR IS RESPONSIBLE FOR TEMPORARILY RELOCATING TRAFFIC SIGNALS AS REQUIRED DURING CONSTRUCTION. NO TRAFFIC SIGNALS MAY BE MODIFIED IN ANY WAY WITHOUT THE PERMISSION OF THE COMMISSIONER.
22. THE CONTRACTOR MUST PROVIDE AND INSTALL ALTERNATE TRAFFIC SIGNAL TIMINGS FOR TRAFFIC SIGNAL CONTROLLERS WITHIN THE WORK ZONE, AT TEMPORARY TRAFFIC SIGNAL LOCATIONS, AND ALONG THE DETOUR ROUTES WHEN REQUESTED BY CDOT. SIGNAL TIMINGS MAY ONLY BE INSTALLED AFTER APPROVAL FROM CDOT.
23. THE CONTRACTOR MUST MAINTAIN AT LEAST ONE (1) NORTHBOUND AND ONE (1) SOUTHBOUND LANE ON STATE ST AND ONE (1) EASTBOUND LANE ON LAKE ST AT ALL TIMES EXCEPT AS PERMITTED BY THE CONTRACT DOCUMENTS.
24. THROUGH THE CONSTRUCTION ZONE, LAKE ST MUST BE SIGNED FOR USE BY LOCAL TRAFFIC ONLY. DETOURS FOR LAKE ST MUST BE MAINTAINED BY THE CONTRACTOR FOR THE DURATION OF LANE CLOSURES.
25. THE CONTRACTOR WILL BE PERMITTED TO FULLY CLOSE THE INTERSECTION OF STATE ST AND LAKE ST FOR UP TO FIVE (5) WEEKEND PERIODS, CONCURRENT WITH THE PERMISSIBLE WEEKEND (50 OR 54 HOUR) TWO-TRACK CTA REROUTES. STREET CLOSURES WILL BE LIMITED TO 7:00PM FRIDAY TO 4:00AM MONDAY. LAKE ST MAY BE CLOSED BETWEEN DEARBORN ST AND WABASH ST AND STATE ST MAY BE CLOSED BETWEEN RANDOLPH ST AND WACKER DR, EXCEPT THAT LOCAL VEHICULAR AND PEDESTRIAN ACCESS TO BUSINESSES, RESIDENCES, AND DRIVEWAYS MUST BE MAINTAINED. DETOURS MUST BE ERECTED AND MAINTAINED DURING THIS TIME. ADVANCE COMMISSIONER APPROVAL WILL BE REQUIRED, AND THE CLOSURES MUST BE COORDINATED WITH THE COMMISSIONER TO AVOID SPECIAL EVENTS OR OTHER DATES OF SIGNIFCANT TRAFFIC.
26. ACCESS TO EXISTING CROSS ROADS AND DRIVES MUST BE MAINTAINED AT ALL TIMES DURING CONSTRUCTION.
27. TRAFFIC MUST BE MAINTAINED ON ALL STREETS AND PARKING WILL BE PROHIBITED WITHIN 50' OF THE CONSTRUCTION AREA AT ALL TIMES EXCEPT IN THE DESIGNATED LOADING ZONES. THE CONTRACTOR MUST NOTIFY THE BUREAU OF TRAFFIC ENGINEERING AND OPERATIONS 48 HOURS BEFORE COMMENCING CONSTRUCTION.
28. ALL TEMPORARY REGULATORY, WARNING AND GUIDE SIGNS WITHIN THE PROPOSED IMPROVEMENT MUST BE RELOCATED BY THE CONTRACTOR AS DIRECTED BY THE COMMISSIONER.
29. ALL TRAFFIC SIGNS WITHIN THE LIMITS OF CONSTRUCTION WHICH INTERFERE WITH CONSTRUCTION OPERATIONS OR WHICH ARE OBSCURED BY OR OTHERWISE INTERFERED WITH BY THE CONSTRUCTION OPERATIONS TO THE EXTENT THAT THEY NO LONGER HAVE THE DESIRED EFFECT ON TRAFFIC, MUST BE REMOVED BY THE CONTRACTOR WHEN DIRECTED BY THE COMMISSIONER. ANY SUCH SIGNS THE COMMISSIONER DETERMINES ARE ESSENTIAL TO THE SAFE AND ORDERLY FLOW OF TRAFFIC MUST BE RE-ERECTED IMMEDIATELY BY THE CONTRACTOR AT TEMPORARY LOCATIONS IN A MANNER ACCEPTABLE TO THE COMMISSIONER. THE CONTRACTOR MUST MAINTAIN THE SIGNS IN A STRAIGHT AND NEAT CONDITION FOR THE DURATION OF THE TEMPORARY MOUNTING. SIGNS WHICH ARE NOT TO BE ERECTED IMMEDIATELY MUST BE STORED OFF THE GROUND IN A COVERED AREA. AS SOON AS CONSTRUCTION OPERATIONS PERMIT, THE SIGNS MUST BE REPLACED AT THEIR PERMANENT LOCATIONS TO THE SATISFACTION OF THE COMMISSIONER. ANY SIGN OR POST WHICH THE COMMISSIONER DETERMINES HAS BEEN DAMAGED DUE TO THE CONSTRUCTION OPERATION OR WHILE IN STORAGE MUST BE REPLACED BY THE CONTRACTOR. THE CONTRACTOR. THE COSTS OF ALL MATERIALS REQUIRED AND ALL LABOR NECESSARY TO COMPLY WITH THIS WORK WILL BE CONSIDERED INCLUDED IN THE COST OF THE CONTRACT.
30. WORK, STORAGE, AND STAGING AREAS MUST BE SURROUNDED BY 6' HIGH TEMPORARY CHAIN LINK FENCE. OPAQUE FABRIC MESHING MUST BE AFFIXED TO TO ALL FENCE FACES, INCLUDING GATES. ADVERTISEMENTS MAY NOT BE AFFIXED TO THE FENCE OR MESHING, EXCEPT AS AUTHORIZED BY THE COMMISSIONER. THE FENCE MUST RESIST 30 PSF WIND LOADS WITH A MAXIMUM 3" DEFLECTION, AND BASES MAY NOT IMPEDE VEHICULAR OR PEDESTRIAN TRAFFIC.
31. DURING ANY TRAFFIC STAGE WHERE ACCESS TO THE WLS-TV PARKING GARAGE (LOCATED ON THE SOUTH SIDE OF LAKE ST BETWEEN DEARBORN ST AND STATE ST) IS BLOCKED, THE CONTRACTOR SHALL CREATE A SPACE WITHIN THE LAKE ST ROW FOR WLS-TV TO PARK UP TO 10 NEWS VANS. COORDINATE THIS EFFORT WITH BRAD PLANT, WLS-TV, (312) 750-7747, BRAD.PLANT@ABC.COM.
32. THE CONTRACTOR MUST COORDINATE WITH THE CHICAGO OFFICE OF EMERGENCY MANAGEMENT TO REQUEST AND SCHEDULE TRAFFIC MANAGEMENT AIDES (TMAS) FOR THE WORK AREA AS NEEDED TO FACILITATE THE FLOW OF VEHICULAR AND PEDESTRIAN TRAFFIC. REIMBURSEMENT OF OEMC'S COSTS FOR THE TMAS WILL BE PAID THROUGH A CONTRACT ALLOWANCE OR SEPARATELY BY THE CITY, BUT COORDINATION EFFORTS WILL BE CONSIDERED INCLUDED IN THE LUMP SUM BID PRICE FOR MOBILIZATION.
33. THE SCHOOL OF THE ART INSTITUTE DORM, 162 N STATE ST, CONDUCTS STUDENT MOVE-IN AND MOVE-OUT 2 WEEKENDS IN AUGUST AND 1 WEEKEND IN MAY. THE TRAFFIC PATTERN CIRCLES NORTH ON DEARBORN ST, EAST ON COUCH PL, SOUTH ON STATE ST AND EAST ON RANDOLPH ST VEHICULAR ACCESS WICH PERMITS THIS CIRCULATION PATTERN MUST BE MAINTAINED ON THESE WEEKENDS.
34. DURING PERIODS WHEN STATE ST TRAFFIC ACCESS TO theWIT HOTEL'S FRONT ENTRANCE, 201 N STATE ST, IS BLOCKED, THE HOTEL WILL USE AN ALTERNATE ACCESS PATTERN OF SOUTH ON WABASH AVE, WEST ON HADDOCK PL, AND NORTH ON STATE ST. VEHICULAR ACCESS TO THESE STREETS TO PERMIT THIS PATTERN MUST BE MAINTAINED DURING THESE TIMES.
35. FACILITIES FOR BICYCLISTS, INCLUDING WITHIN THE WORK ZONE, MUST BE MAINTAINED BY THE CONTRACTOR IN THE SAME LEVEL OF PROTECTION (BARRIER-SEPARATED, PAINTED LANE, ETC.) AS THE EXISTING CONDITIONS.
35. ACCESS BETWEEN STATE ST, COUCH PL, AND BENTON PL FOR MULTI-UNIT (SEMI) TRUCKS MUST BE MAINTAINED THROUGHOUT CONSTRUCTION TO ENABLE DELIVERIES TO BUSINESSES WITH DOORS AND DOCKS ON THESE ALLEYS. THE NEDERLANDER THEATER (24 W RANDOLPH ST) USES COUCH PL FOR SHOW LOAD-IN AND LOAD-OUT BEFORE AND AFTER SHOW RUNS. CURRENTLY KNOWN DAYS OF NEEDED COUCH PL LARGE TRUCK ACCESS ARE 6/10/23-7/30/23, 9/2/23-9/3/23, 9/11/23-9/13/23, AND 1/28/24. ADDITIONAL DATES WILL BE ADDED AS ADDITIONAL SHOWS ARE SCHEDULED. THE CHICAGO THEATER (175 N STATE ST) LOADS-IN AND LOADS-OUT SHOWS ON BENTON PL MULTIPLE TIMES PER MONTH. 180 N WABASH AVE TRASH COLLECTION OCCURS DAILY. THESE AND ADDITIONAL BUSINESSES WITH ALLEY ACCESS RECEIVE TRUCK DELIVERIES, AND ALL BUISNESSES RECEIVE REGULAR, SMALLER DELIVIERIES DAILY.

DESIGN BY:										
DRAWN BY:										
CHECKED BY:										
APPROVED BY:		4	7/3/2023	ISSUED FOR BID	MRT	MRT	CJD			
CDOT/APPROVED BY:		NO.	DATE	REVISIONS	DES.	DRW.	CHK.	DCCO	CDOT	

TRANSYSTEMS
222 SOUTH RIVERSIDE PLAZA SUITE 610
CHICAGO, ILLINOIS 60606

SKIDMORE, OWINGS & MERRILL LLP
224 SOUTH MICHIGAN AVENUE, SUITE 1000
CHICAGO, ILLINOIS 60604

ARDMORE RODERICK
1500 W CARROLL AVE SUITE 300
CHICAGO, ILLINOIS 60607

CHICAGO DEPARTMENT OF TRANSPORTATION
DIVISION OF ENGINEERING

STATE / LAKE LOOP ELEVATED STATION
200 NORTH STATE STREET, CHICAGO, IL 60601

SPEC. NO.

MAINTENANCE OF TRAFFIC AND DETOUR NOTES

DRAWING NO. CX-100

CDOT PROJECT D-1-209

DATE: 7/3/2023

REVISION NO.

SIGNS

M3-1-2412

M3-2-2412

M3-3-2412

M4-8-2412

M4-8a-2418

M4-10L-4818

M4-10R-4818

M6-1L-2115

M6-1R-2115

M6-3-2115

G20-2-3618

R11-2-4830

R11-4-6030

W1-3L-3030

W1-3R-3030

W1-4L-3030

W1-4R-3030

W1-4BL-3030

W1-4BR-3030

W6-3-3030

W13-1-2424

W20-3-3030

W20-5L-3030

W20-5R-3030

W20-I103-3030

W21-1-3030

SPECIAL 18X30

SPECIAL 18X30

DETOUR SYMBOLS

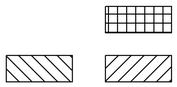

LANE CLOSURE SYMBOLS

DESIGN BY:									
DRAWN BY:									
CHECKED BY:									
APPROVED BY:		4	7/3/2023	ISSUED FOR BID	MRT	MRT	CJD		
CDOT/APPROVED BY:		NO.	DATE	REVISIONS	DES.	DRW.	CHK.	DCCO	CDOT

TRANSYSTEMS
222 SOUTH RIVERSIDE PLAZA SUITE 610
CHICAGO, ILLINOIS 60606

SKIDMORE, OWINGS & MERRILL LLP
224 SOUTH MICHIGAN AVENUE, SUITE 1000
CHICAGO, ILLINOIS 60604

ARDMORE RODERICK
1500 W CARROLL AVE SUITE 300
CHICAGO, ILLINOIS 60607

LICENSED PROFESSIONAL ENGINEER
CARMEN J. DEAN
062-062138
STATE OF ILLINOIS

CHICAGO DEPARTMENT
OF TRANSPORTATION
DIVISION OF ENGINEERING

STATE / LAKE LOOP ELEVATED STATION
200 NORTH STATE STREET, CHICAGO, IL 60601

MAINTENANCE OF TRAFFIC AND DETOUR LEGEND

CDOT PROJECT D-1-209 | DATE: 7/3/2023

SPEC. NO.

DRAWING NO.
CX-101

REVISION NO.

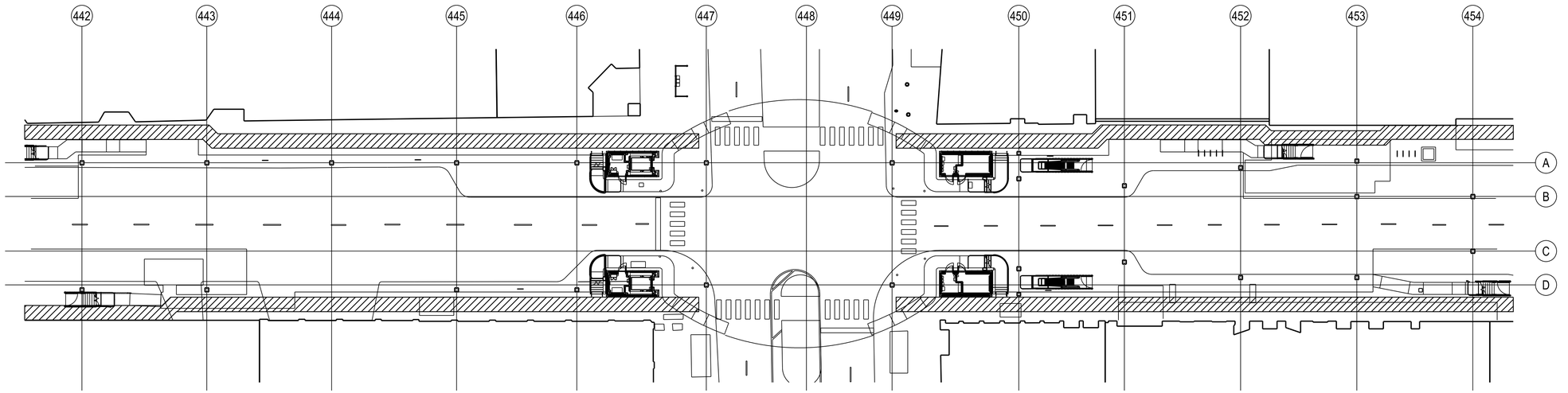

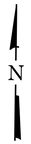

1 STREET LEVEL PLAN - PROPOSED CONSTRUCTION BARRICADES

1" = 25'-0"

LEGEND:

AREA OF OVERHEAD SIDEWALK PROTECTION

NOTES:

1. A HEAVY DUTY CONSTRUCTION CANOPY MUST BE ERECTED ADJACENT TO CONSTRUCTION ACTIVITIES ABOVE STREET LEVEL, PER THE CHICAGO BUILDING CODE, DIVISION 32, CHAPTER 10-28, ARTICLE V-8.
2. PER CHICAGO DEPARTMENT OF FIRE PREVENTION, NO CONCRETE BARRICADES ALLOWED. PROVIDE OPENINGS AND GATES IN CONSTRUCTION FENCE AT FIRE DEPARTMENT CONNECTIONS TO ALLOW ACCESS TO BUILDINGS.
3. ALL EXISTING FIRE HYDRANTS AND SIAMESE CONNECTIONS TO REMAIN ACCESSIBLE WITH MINIMUM CLEARANCES.
4. BARRICADE AND STORAGE AREA WALL DESIGN: CONSTRUCTION AND INSTALLATION SHALL BE DONE TO WITHSTAND 30 PSF AND WIND LOADS (100 MPH). CONTRACTOR TO SUBMIT DETAIL DESIGNS PRIOR TO BARRICADE CONSTRUCTION, FOR THE COMMISSIONER'S REVIEW.
5. ALL LUMBER MUST BE FIRE-RETARDANT TREATED.
6. BARRICADE AND WALL PANELING SHALL BE ACX PLYWOOD OR EQUAL. ALL STEEL SUPPORTS AND EXPOSED PANEL SURFACES TO BE PAINTED CUSTOM COLOR AS SELECTED BY THE COMMISSIONER. POLYCARBONATE VIEWING WINDOWS, AS SHOWN ON SHEET CX-121 SHALL COMPRISE APPROXIMATELY 20% OF THE TOTAL SOLID SURFACE AREA OF THE WALL.
7. CONTRACTOR TO CONFIRM LOAD BEARING CAPACITY AT VAULTED SIDEWALKS PRIOR TO SETTING ANY EQUIPMENT OR MATERIAL.
8. ALL GRAFFITI INCLUDING THAT ON THE CONSTRUCTION BARRICADES TO BE REMOVED DURING CONSTRUCTION WITHIN 24 HOURS.
9. PROVIDE MINIMUM BARRICADE DIMENSIONS AS NOTED ON THE DRAWINGS.
10. PROVIDE OPENING IN BARRICADE (NO CANE RAILS OR CROSS BRACING) 25' MAXIMUM OR AT EVERY BUILDING ENTRANCE. ADD: INSTALL SIGNAGE AT EACH OPENING INDICATING THE NAME OF THE BUSINESS AT THAT DOORWAY. IF THE BUSINESS PROVIDES SIGNAGE, THE CONTRACTOR MUST ERECT IT. IF NOT, THE CONTRACTOR MUST FABRICATE A SIGN WITH MINIMUM 6" LETTER HEIGHT FOR THIS PURPOSE.
11. ALL BARRICADE LIGHTING TO BE HARDWIRED.
12. THE CONTRACTOR MUST PROVIDE TEMPORARY LIGHTING TO ILLUMINATE SIDEWALK TO A 1 FOOTCANDLE AVERAGE UNDER THE OVERHEAD CANOPIES.
13. INSTALL TYPE 3 BARRICADES ON EACH SIDEWALK AT EACH INTERSECTION ON LAKE ST (TOTAL OF 8). FABRICATE AND MOUNT SIGNAGE THAT LISTS EACH BUSINESS ACCESSIBLE FROM THE SIDEWALK ON THAT BLOCK. INSTALL SIGNAGE STATING "LAKE ST BUSINESSES OPEN" ON THE TOP OF THE BARRICADE.
14. THE CONTRACTOR MUST PATROL THE PROJECT AREA, INCLUDING BUSINESS DOORWAY ENTRIES AND SIDEWALK CANOPIES TO ENSURE BUSINESS OPERATOR AND PEDESTRIAN SAFETY AT ALL TIMES.

DESIGN BY:										
DRAWN BY:										
CHECKED BY:										
APPROVED BY:		4	7/3/2023	ISSUED FOR BID						
CDOT/APPROVED BY:		NO.	DATE	REVISIONS	DES.	DRW.	CHK.	DCCO	CDOT	

TRANSYSTEMS
222 SOUTH RIVERSIDE PLAZA SUITE 610
CHICAGO, ILLINOIS 60606

SKIDMORE, OWINGS & MERRILL LLP
224 SOUTH MICHIGAN AVENUE, SUITE 1000
CHICAGO, ILLINOIS 60604

MICHAEL J. LEY
062-055367
LICENSED PROFESSIONAL ENGINEER
ILLINOIS

CHICAGO DEPARTMENT OF TRANSPORTATION
DIVISION OF ENGINEERING

STATE / LAKE LOOP ELEVATED STATION
200 NORTH STATE STREET, CHICAGO, IL 60601

CONSTRUCTION CANOPY AND BARRICADE DETAILS

CDOT PROJECT D-1-209

DATE: 7/3/2023

SPEC. NO.

DRAWING NO. CX-120

REVISION NO.

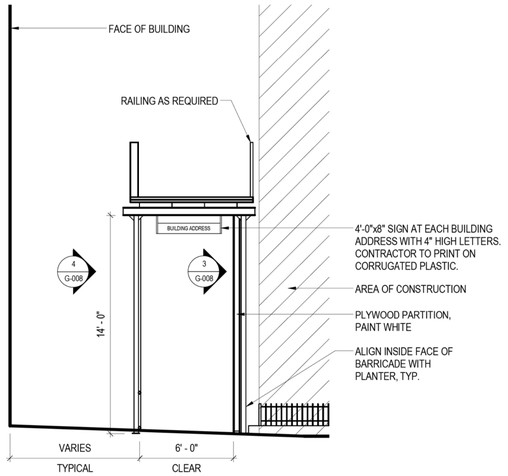

TYPICAL SECTION - CONSTRUCTION
1 BARRICADES

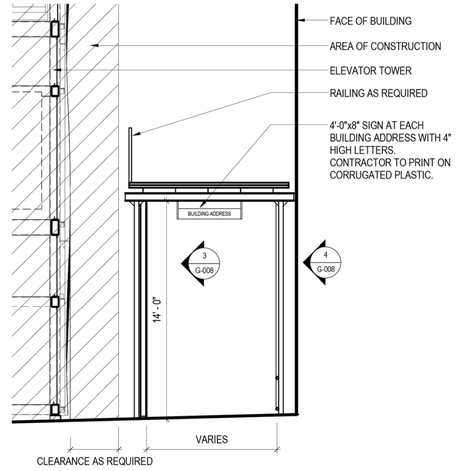

TYPICAL SECTION - CONSTRUCTION
2 BARRICADES AT ELEVATORS

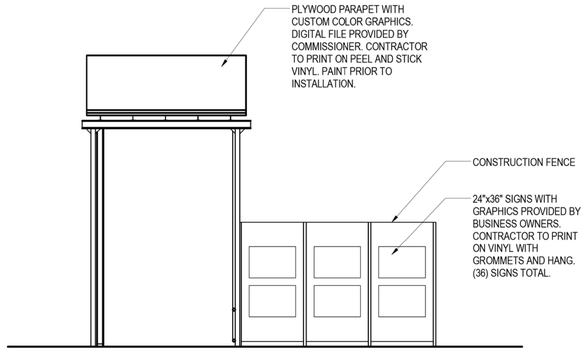

5 ELEVATION - CONSTRUCTION FENCE

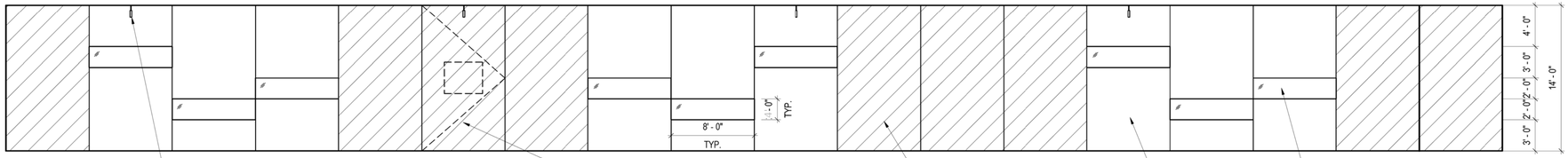

3 TYPICAL ELEVATION - CONSTRUCTION BARRICADE PLYWOOD PARTITION

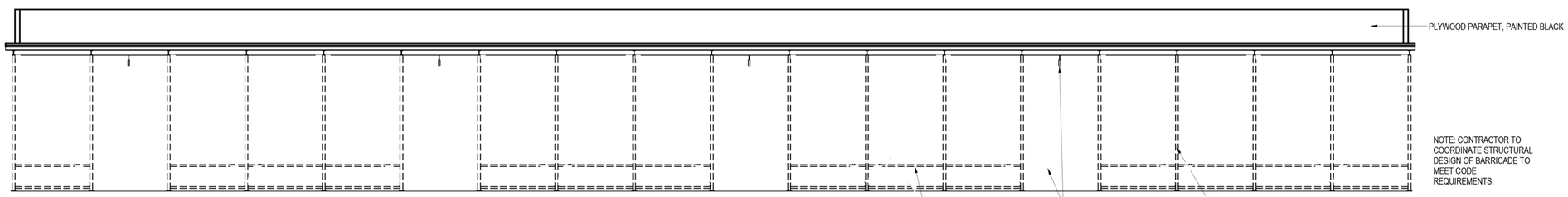

4 TYPICAL ELEVATION - CONSTRUCTION BARRICADE BRACING

DESIGN BY:	XXX								
DRAWN BY:	XXX								
CHECKED BY:	XXX								
APPROVED BY:	XXX	4	7/3/2023	ISSUED FOR BID					
CDOT/APPROVED BY:		NO.	DATE	REVISIONS	DES.	DRW.	CHK.	DCCO	CDOT

TRANSYSTEMS
222 SOUTH RIVERSIDE PLAZA SUITE 610
CHICAGO, ILLINOIS 60606

SKIDMORE, OWINGS & MERRILL LLP
224 SOUTH MICHIGAN AVENUE, SUITE 1000
CHICAGO, ILLINOIS 60604

MICHAEL J. LEV
062-055367
LICENSED PROFESSIONAL ENGINEER
STATE OF ILLINOIS

CHICAGO DEPARTMENT OF TRANSPORTATION
DIVISION OF ENGINEERING

STATE / LAKE LOOP ELEVATED STATION
200 NORTH STATE STREET, CHICAGO, IL 60601

SPEC. NO.

CONSTRUCTION CANOPY AND BARRICADE DETAILS

DRAWING NO.
CX-121

CDOT PROJECT D-1-209

DATE: 7/3/2023

REVISION NO.

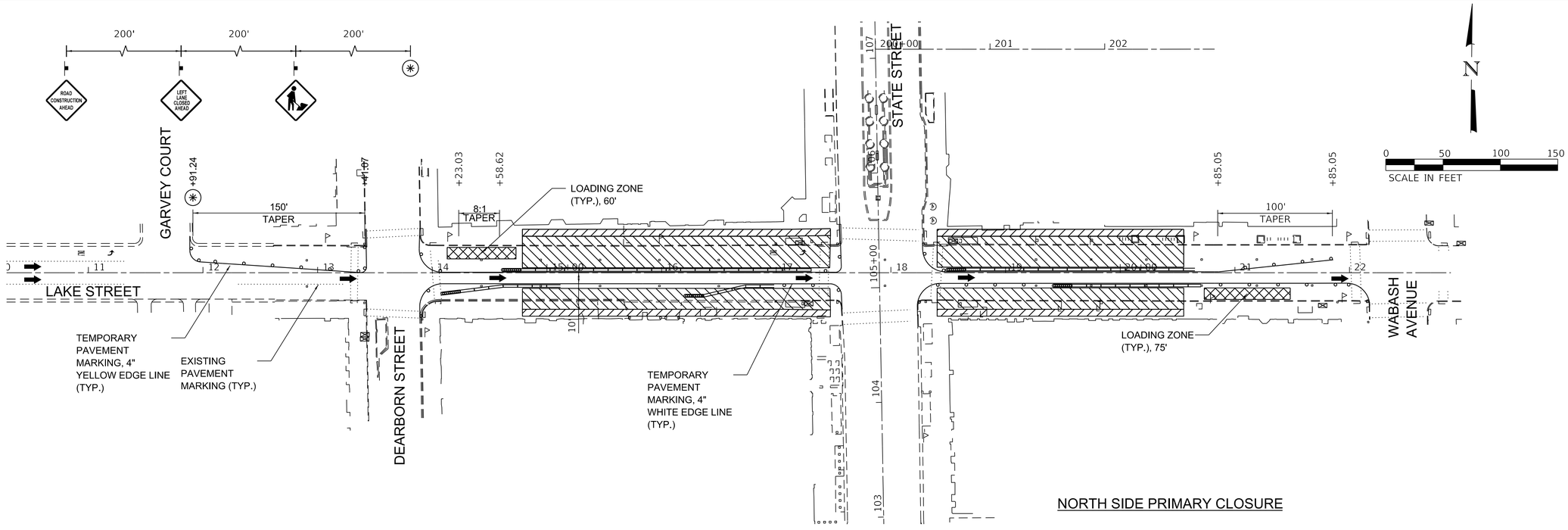

NOTES

1. SIDEWALK TO REMAIN OPEN DURING STREET CLOSURE. TEMPORARY CONCRETE BARRIER WITH SCREENING TO BE USED TO SEPARATE WORK AREA AND SIDEWALK.
2. SEE SHEET CX-401 FOR LAKE STREET FULL CLOSURE FROM DEARBORN STREET TO WABASH AVENUE.
3. THE TEMPORARY CONRETE BARRIER WITH SCREENING WILL BE GAPPED AT EXISTING COLUMNS UNTIL THE COLUMNS HAVE BEEN REMOVED
4. LOADING ZONES ON LAKE ST., AS IDENTIFIED IN THE PLAN VIEW, MUST BE CREATED, MARKED WITH SIGNAGE, AND MAINTAINED BY THE CONTRACTOR FOR USE FOR DELIVERIES TO ADJACENT BUSINESSES. DO NOT INSTALL TEMPOARAY CONCRETE BARRIER WITHIN LOADING ZONE LIMITS.

DESIGN BY:									
DRAWN BY:									
CHECKED BY:									
APPROVED BY:		4	7/3/2023	ISSUED FOR BID	MRT	MRT	CJD		
CDOT/APPROVED BY:		NO.	DATE	REVISIONS	DES.	DRW.	CHK.	DCCO	CDOT

TRANSYSTEMS
222 SOUTH RIVERSIDE PLAZA SUITE 610
CHICAGO, ILLINOIS 60606

SKIDMORE, OWINGS & MERRILL LLP
224 SOUTH MICHIGAN AVENUE, SUITE 1000
CHICAGO, ILLINOIS 60604

ARDMORE RODERICK
1500 W CARROLL AVE SUITE 300
CHICAGO, ILLINOIS 60607

LICENSED PROFESSIONAL ENGINEER
CARMEN J. DEAN
062-062138
STATE OF ILLINOIS

CHICAGO DEPARTMENT OF TRANSPORTATION
DIVISION OF ENGINEERING

STATE / LAKE LOOP ELEVATED STATION
200 NORTH STATE STREET, CHICAGO, IL 60601

SPEC. NO.

MAINTENANCE OF TRAFFIC
LAKE STREET

DRAWING NO.
CX-201

CDOT PROJECT D-1-209

DATE: 7/3/2023

REVISION NO.

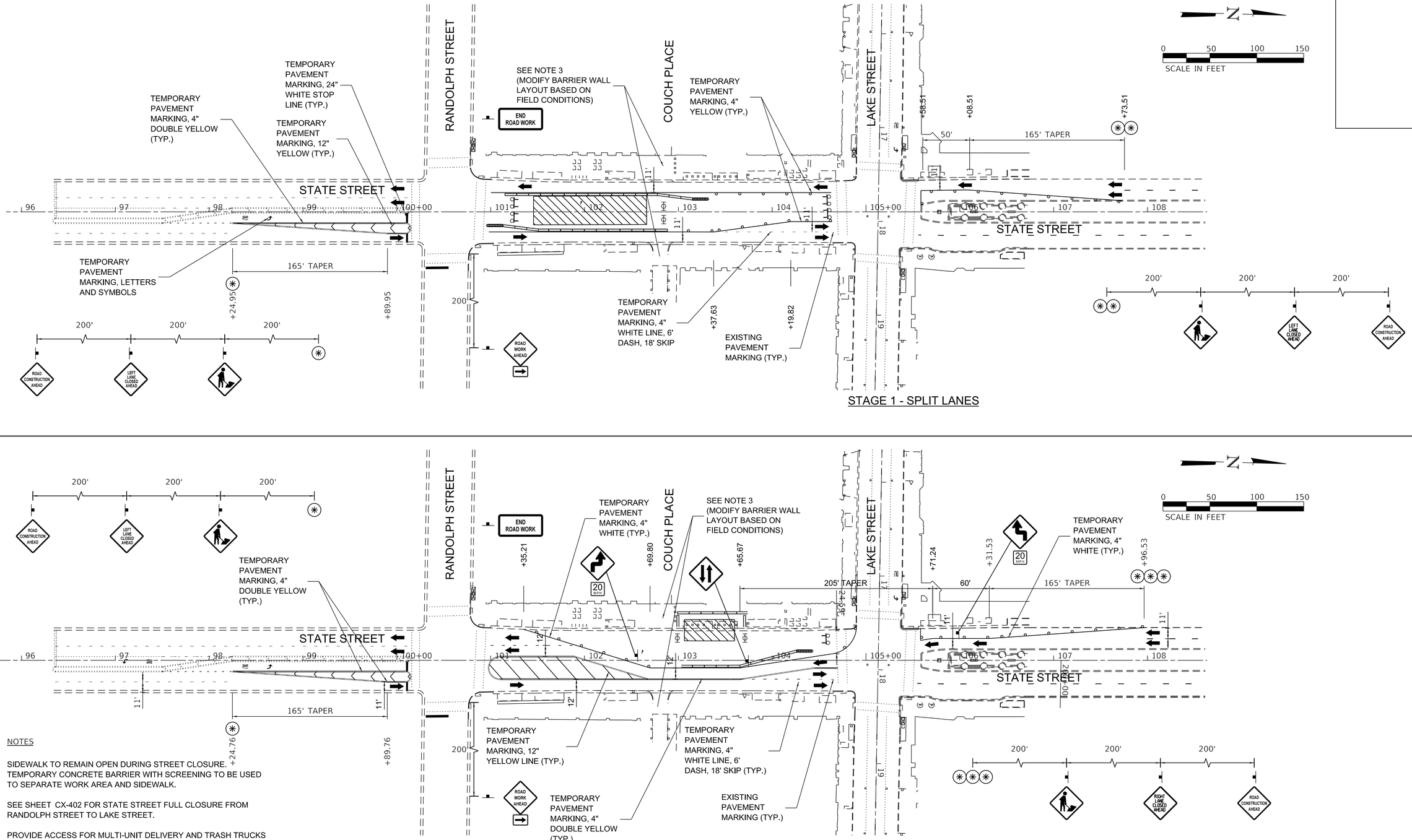

NOTES

1. SIDEWALK TO REMAIN OPEN DURING STREET CLOSURE. TEMPORARY CONCRETE BARRIER WITH SCREENING TO BE USED TO SEPARATE WORK AREA AND SIDEWALK.
2. SEE SHEET CX-402 FOR STATE STREET FULL CLOSURE FROM RANDOLPH STREET TO LAKE STREET.
3. PROVIDE ACCESS FOR MULTI-UNIT DELIVERY AND TRASH TRUCKS TO COUCH PLACE AND BENTON PLACE. COORDINATE WITH PROPERTIES WITH COUCH/BENTON PLACE ACCESS OR DOCKS.

DESIGN BY:									
DRAWN BY:									
CHECKED BY:									
APPROVED BY:		4	7/3/2023	ISSUED FOR BID	MRT	MRT	CJD		
CDOT/APPROVED BY:		NO.	DATE	REVISIONS	DES.	DRW.	CHK.	DCCO	CDOT

TRANSYSTEMS
222 SOUTH RIVERSIDE PLAZA SUITE 610
CHICAGO, ILLINOIS 60606

SKIDMORE, OWINGS & MERRILL LLP
224 SOUTH MICHIGAN AVENUE, SUITE 1000
CHICAGO, ILLINOIS 60604

ARDMORE RODERICK
1500 W CARROLL AVE SUITE 300
CHICAGO, ILLINOIS 60607

LICENSED PROFESSIONAL ENGINEER
CARMEN J. DEAN
062-062138
STATE OF ILLINOIS

CHICAGO DEPARTMENT OF TRANSPORTATION
DIVISION OF ENGINEERING

STATE / LAKE LOOP ELEVATED STATION
200 NORTH STATE STREET, CHICAGO, IL 60601

SPEC. NO.

MAINTENANCE OF TRAFFIC
STATE STREET

DRAWING NO.
CX-202

CDOT PROJECT D-1-209

DATE: 7/3/2023

REVISION NO.

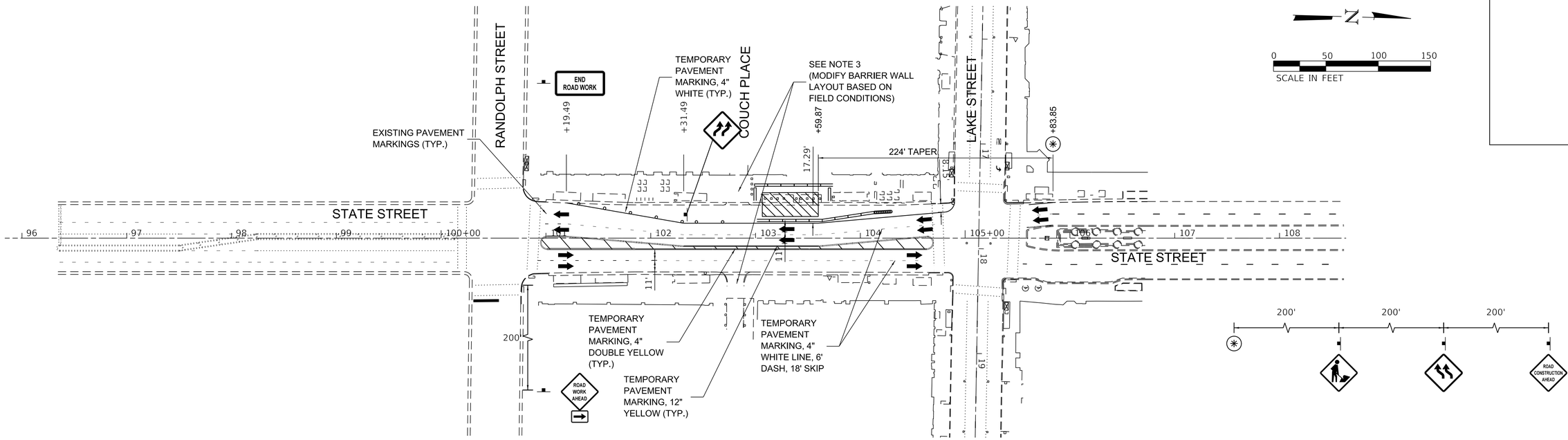

STAGE 2 - WEST SIDE CLOSURE (AS NEEDED)

NOTES

1. SIDEWALK TO REMAIN OPEN DURING STREET CLOSURE. TEMPORARY CONCRETE BARRIER WITH SCREENING TO BE USED TO SEPARATE WORK AREA AND SIDEWALK.
2. SEE SHEET CX-402 FOR STATE STREET FULL CLOSURE FROM RANDOLPH STREET TO LAKE STREET.
3. PROVIDE ACCESS FOR MULIT-UNIT DELIVERY AND TRASH TRUCKS TO COUCH PLACE AND BENTON PLACE. COORDINATE WITH PROPERTIES WITH COUCH/BENTON PLACE ACCESS OR DOCKS.

DESIGN BY:										
DRAWN BY:										
CHECKED BY:										
APPROVED BY:		4	7/3/2023	ISSUED FOR BID	MRT	MRT	CJD			
CDOT/APPROVED BY:		NO.	DATE	REVISIONS	DES.	DRW.	CHK.	DCCO	CDOT	

TRANSYSTEMS
222 SOUTH RIVERSIDE PLAZA SUITE 610
CHICAGO, ILLINOIS 60606

SKIDMORE, OWINGS & MERRILL LLP
224 SOUTH MICHIGAN AVENUE, SUITE 1000
CHICAGO, ILLINOIS 60604

ARDMORE RODERICK
1500 W CARROLL AVE SUITE 300
CHICAGO, ILLINOIS 60607

LICENSED PROFESSIONAL ENGINEER
CARMEN J. DEAN
062-062138
STATE OF ILLINOIS

CHICAGO DEPARTMENT OF TRANSPORTATION
DIVISION OF ENGINEERING

STATE / LAKE LOOP ELEVATED STATION
200 NORTH STATE STREET, CHICAGO, IL 60601

MAINTENANCE OF TRAFFIC
STATE STREET

CDOT PROJECT D-1-209

DATE: 7/3/2023

SPEC. NO.

DRAWING NO.
CX-203

REVISION NO.

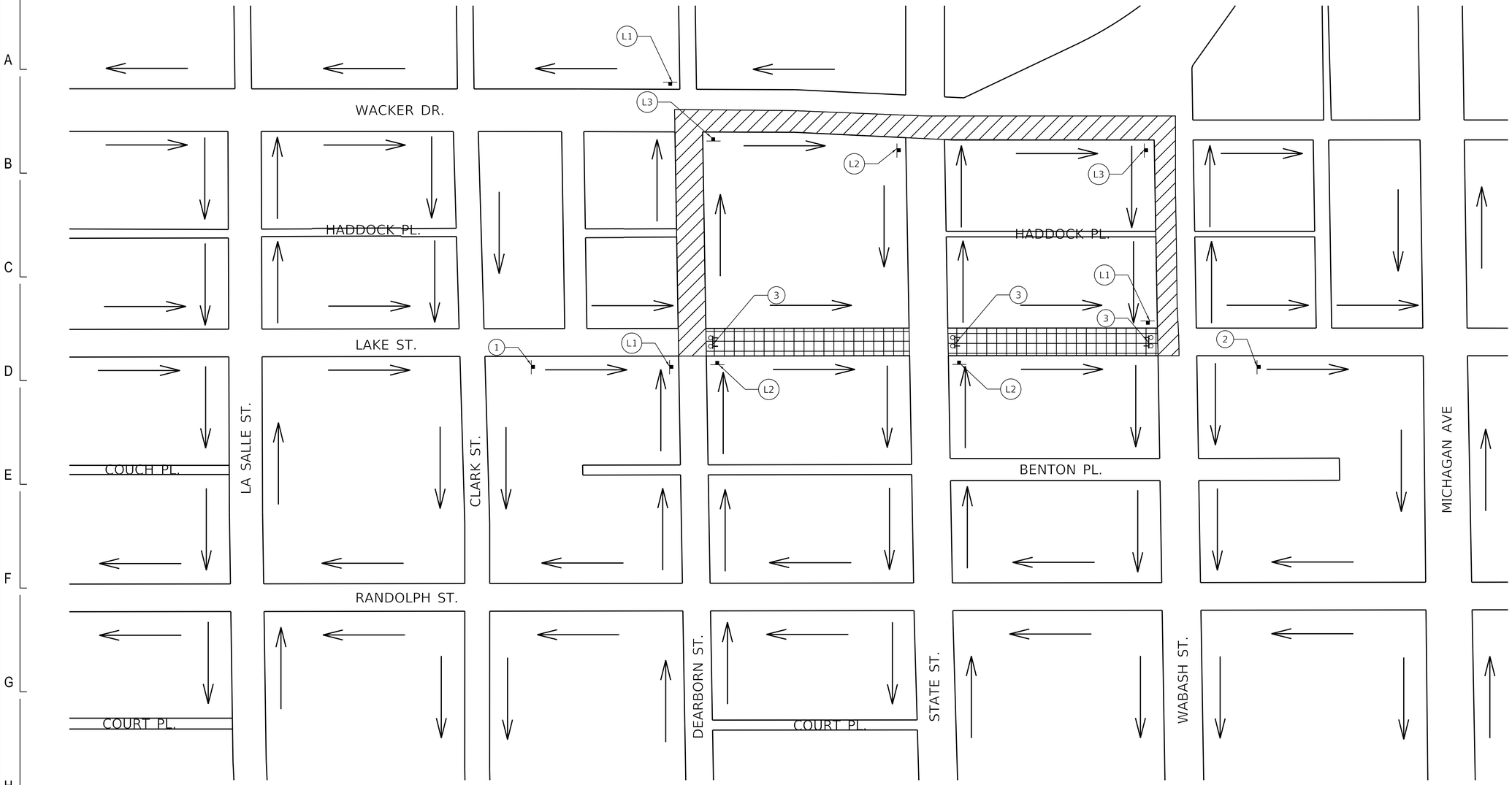

NOTES

1. THIS DETOUR WILL APPLY WHEN CONSTRUCTION WORK NECESSITATES THE FULL CLOSURE OF LAKE STREET DUE TO OVERHEAD LIFTS OR EXCAVATIONS. LOCAL DRIVEWAY ACCESS MUST BE MAINTAINED AT ALL TIMES.
2. AT THE DIRECTION OF CDOT, THIS DETOUR MAY BE MAINTAINED AS AN ALTERNATIE THRU ROUTING FOR ADDITIONAL DURATIONS.

LEGEND

WORK AREA

DETOUR ROUTE

1 ROAD CONSTRUCTION AHEAD

2 END DETOUR

3 ROAD CLOSED — DETOUR

4 ROAD CLOSED TO THRU TRAFFIC — DETOUR

L1 EAST LAKE STREET DETOUR ←

L2 EAST LAKE STREET DETOUR ↑

L3 EAST LAKE STREET DETOUR →

DESIGN BY:										
DRAWN BY:										
CHECKED BY:										
APPROVED BY:		4	7/3/2023	ISSUED FOR BID	MRT	MRT	CJD			
CDOT/APPROVED BY:		NO.	DATE	REVISIONS	DES.	DRW.	CHK.	DCCO	CDOT	

TRANSYSTEMS
222 SOUTH RIVERSIDE PLAZA SUITE 610
CHICAGO, ILLINOIS 60606

SKIDMORE, OWINGS & MERRILL LLP
224 SOUTH MICHIGAN AVENUE, SUITE 1000
CHICAGO, ILLINOIS 60604

ARDMORE RODERICK
1500 W CARROLL AVE SUITE 300
CHICAGO, ILLINOIS 60607

CHICAGO DEPARTMENT OF TRANSPORTATION
DIVISION OF ENGINEERING

STATE / LAKE LOOP ELEVATED STATION
200 NORTH STATE STREET, CHICAGO, IL 60601

FULL STREET CLOSURE
LAKE STREET FROM DEARBORN TO WABASH

CDOT PROJECT D-1-209

DATE: 7/3/2023

SPEC. NO.

DRAWING NO.
CX-401

REVISION NO.

N

0 100 200 300

SCALE IN FEET

NOTES

1. THIS DETOUR WILL APPLY WHEN CONSTRUCTION WORK NECESSITATES THE FULL CLOSURE OF STATE STREET DUE EXCAVATION AND UNDERGROUND CONSTRUCTION ACTIVITY. LOCAL DRIVEWAY, ALLEY, AND STREET ACCESS MUST BE MAINTAINED AT ALL TIMES.

LEGEND

WORK AREA

DETOUR ROUTE - NORTHBOUND TRAFFIC

DETOUR ROUTE - SOUTHBOUND TRAFFIC

1 ROAD CONSTRUCTION AHEAD

2 END DETOUR

3 ROAD CLOSED

4 ROAD CLOSED TO THRU TRAFFIC DETOUR

S1 NORTH STATE STREET DETOUR ←

S2 NORTH STATE STREET DETOUR ↑

S3 NORTH STATE STREET DETOUR →

S4 SOUTH STATE STREET DETOUR ←

S5 SOUTH STATE STREET DETOUR ↑

S6 SOUTH STATE STREET DETOUR →

DESIGN BY:									
DRAWN BY:									
CHECKED BY:									
APPROVED BY:		4	7/3/2023	ISSUED FOR BID	MRT	MRT	CJD		
CDOT/APPROVED BY:		NO.	DATE	REVISIONS	DES.	DRW.	CHK.	DCCO	CDOT

TRANSYSTEMS
222 SOUTH RIVERSIDE PLAZA SUITE 610
CHICAGO, ILLINOIS 60606

SKIDMORE, OWINGS & MERRILL LLP
224 SOUTH MICHIGAN AVENUE, SUITE 1000
CHICAGO, ILLINOIS 60604

ARDMORE RODERICK
1500 W CARROLL AVE SUITE 300
CHICAGO, ILLINOIS 60607

LICENSED PROFESSIONAL ENGINEER
CARMEN J. DEAN
062-062138
STATE OF ILLINOIS

CHICAGO DEPARTMENT OF TRANSPORTATION
DIVISION OF ENGINEERING

STATE / LAKE LOOP ELEVATED STATION
200 NORTH STATE STREET, CHICAGO, IL 60601

SPEC. NO.

FULL STREET CLOSURE
STATE STREET FROM RANDOLPH TO LAKE

DRAWING NO.
CX-402

CDOT PROJECT D-1-209

DATE: 7/3/2023

REVISION NO.

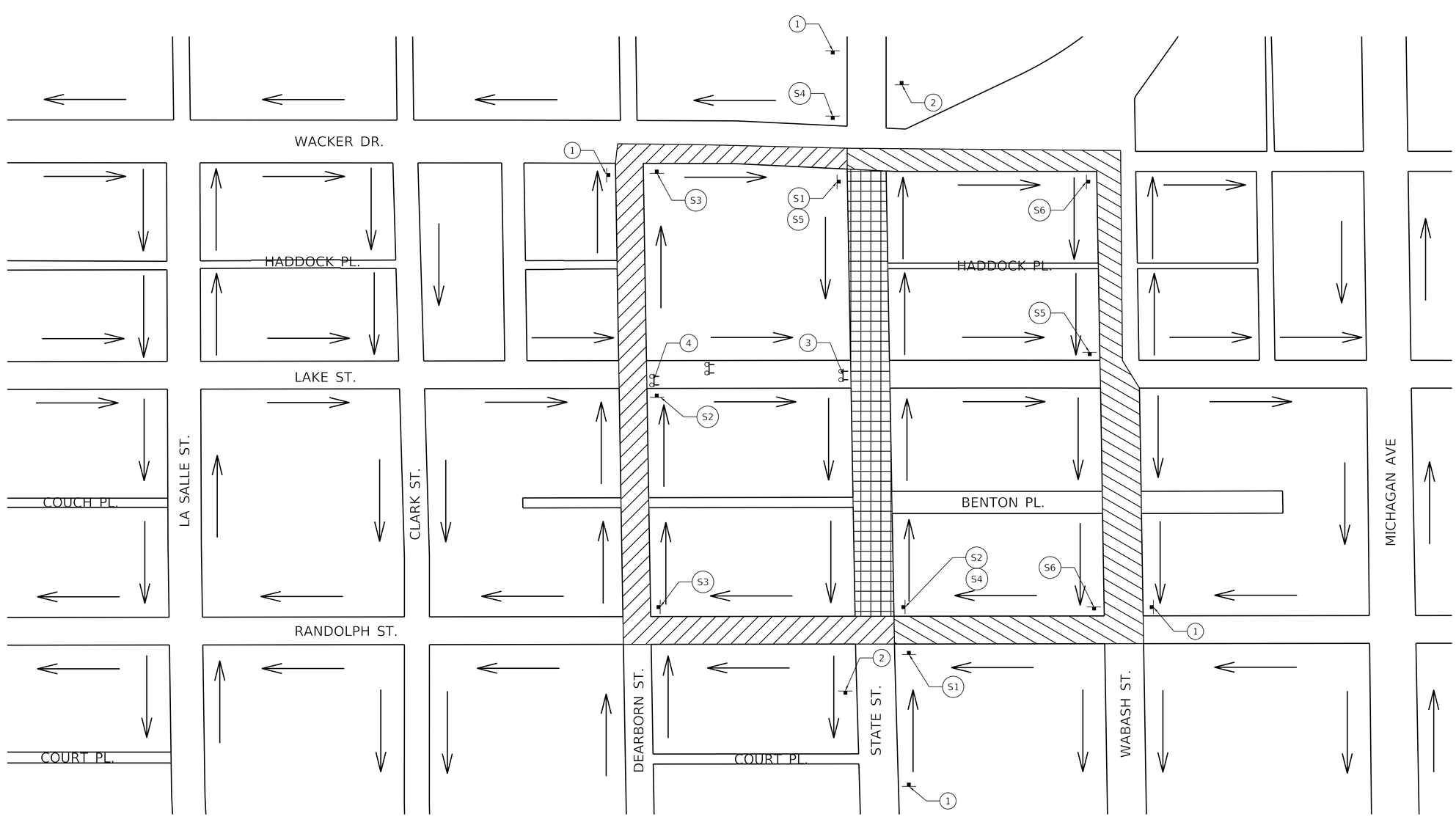

NOTES

1. THIS DETOUR WILL APPLY WHEN CONSTRUCTION WORK NECESSITATES THE FULL CLOSURE OF STATE STREET DUE TO OVERHEAD CONSTRUCTION ACTIVITY ALONG LAKE STREET. LOCAL DRIVEWAY, ALLEY, AND STREET ACCESS MUST BE MAINTAINED AT ALL TIMES.

LEGEND

WORK AREA

DETOUR ROUTE - NORTHBOUND TRAFFIC

DETOUR ROUTE - SOUTHBOUND TRAFFIC

1 ROAD CONSTRUCTION AHEAD

2 END DETOUR

3 ROAD CLOSED

4 ROAD CLOSED TO THRU TRAFFIC DETOUR

S1 NORTH STATE STREET DETOUR ←

S2 NORTH STATE STREET DETOUR ↑

S3 NORTH STATE STREET DETOUR →

S4 SOUTH STATE STREET DETOUR ←

S5 SOUTH STATE STREET DETOUR ↑

S6 SOUTH STATE STREET DETOUR →

DESIGN BY:									
DRAWN BY:									
CHECKED BY:									
APPROVED BY:		4	7/3/2023	ISSUED FOR BID	MRT	MRT	CJD		
CDOT/APPROVED BY:		NO.	DATE	REVISIONS	DES.	DRW.	CHK.	DCCO	CDOT

TRANSYSTEMS
222 SOUTH RIVERSIDE PLAZA SUITE 610
CHICAGO, ILLINOIS 60606

SKIDMORE, OWINGS & MERRILL LLP
224 SOUTH MICHIGAN AVENUE, SUITE 1000
CHICAGO, ILLINOIS 60604

ARDMORE RODERICK
1500 W CARROLL AVE SUITE 300
CHICAGO, ILLINOIS 60607

LICENSED PROFESSIONAL ENGINEER
CARMEN J. DEAN
062-062138
STATE OF ILLINOIS

CHICAGO DEPARTMENT OF TRANSPORTATION
DIVISION OF ENGINEERING

STATE / LAKE LOOP ELEVATED STATION
200 NORTH STATE STREET, CHICAGO, IL 60601

SPEC. NO.

FULL STREET CLOSURE
STATE STREET FROM RANDOLPH TO WACKER

DRAWING NO.
CX-403

CDOT PROJECT D-1-209

DATE: 7/3/2023

REVISION NO.

TURN BAY ENTRANCE AT START OF LANE CLOSURE TAPER

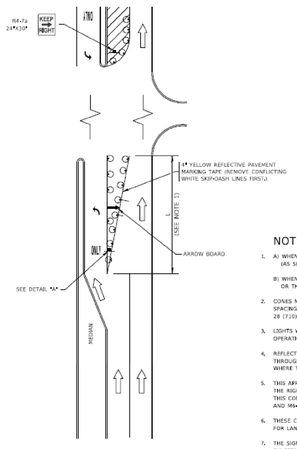

FIGURE 1

LEGEND

- WORK AREA
- LANE OPEN TO TRAFFIC
- ARROW BOARD
- TYPE I OR II BARRICADE OR DRUM WITH STEADY BURN LIGHT
- DRUM WITH STEADY BURN LIGHT
- SIGN ASSEMBLY
- TYPE I OR II CHECK BARRICADE WITH FLASHING LIGHT

NOTES:

1. A) WHEN "L" IS ≤ THE STORAGE LENGTH OF THE TURN LANE (AS SHOWN IN TBL. 1), USE FIGURE 1.

   B) WHEN "L" IS > THE STORAGE LENGTH OF THE TURN LANE OR THE TURN LANE IS WITHIN THE LANE CLOSURE, USE FIGURE 2.
2. CONES MAY BE SUBSTITUTED FOR BARRICADES OR DRUMS AT HALF THE SPACING DURING DAY OPERATIONS. CONES SHALL BE A MINIMUM OF 28" (710) IN HEIGHT.
3. LIGHTS WILL NOT BE REQUIRED ON BARRICADES OR DRUMS FOR DAY OPERATIONS. ALL LIGHTS SHALL BE MONODIRECTIONAL.
4. REFLECTIVE TEMPORARY PAVEMENT MARKINGS SHALL BE PLACED THROUGHOUT THE BARRICADED AREAS OF EACH TURN BAY AS SHOWN WHERE THE CLOSURE TIME IS GREATER THAN FOURTEEN (14) DAYS.
5. THIS APPLICATION ALSO APPLIES WHEN WORK IS BEING PERFORMED IN THE RIGHT LANE(S) AND THE RIGHT TURN BAY IS TO REMAIN OPEN, UNDER THIS CONDITION, "RIGHT TURN LANE" R3-1100L 24 x 24 (600 x 600) AND M4-7R 21 x 15 (530 x 380) SHALL BE USED.
6. THESE CONTROLS SHALL SUPPLEMENT MAINLINE TRAFFIC CONTROL FOR LANE CLOSURES.
7. THE SIGNS SHALL BE MOUNTED ABOVE THE BARRICADES/DRUMS ON SEPARATE SIGN SUPPORTS THAT MEET NCHRP 350 OR MASH REQUIREMENTS.
8. TRAFFIC CONTROL AND PROTECTION AT TURN BAYS (TO REMAIN OPEN TO TRAFFIC) SHALL BE INCLUDED IN THE COST OF SPECIFIED TRAFFIC CONTROL STANDARDS OR ITEMS.

DETAIL A

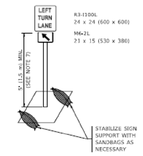

TURN BAY ENTRANCE WITHIN A LANE CLOSURE

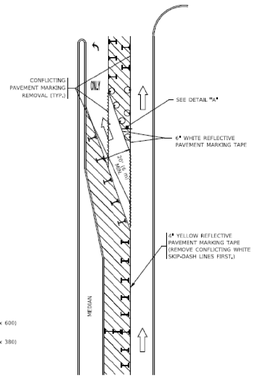

FIGURE 2

All dimensions are in inches (millimeters) unless otherwise shown.

BLOCK NAME = blockd	DESIGNED - T. Kraback	09-06-04	REVISED -	5) ROAD CLOSURE	
	DRAWN - A. LOUSBY	10-12-06	REVISED -	A. SCHLETZ	09-01-03
PLOT SCALE = 81.2000 ' / In.	CHECKED - A. LOUSBY	10-12-06	REVISED -	A. SCHLETZ	09-01-06
PLOT DATE = 9/6/2010	DATE - T. Kraback	09-06-04	REVISED -		

STATE OF ILLINOIS
DEPARTMENT OF TRANSPORTATION

TRAFFIC CONTROL AND PROTECTION AT TURN BAYS (TO REMAIN OPEN TO TRAFFIC)

SCALE: NONE | SHEET 1 OF 1 SHEETS | STA. | TO STA.

ALT.	SECTION	COUNTY	TOTAL SHEETS	SHEET NO.
	TC-14		CONTRACT NO.	
		ILLINOIS FED. AID PROJECT		

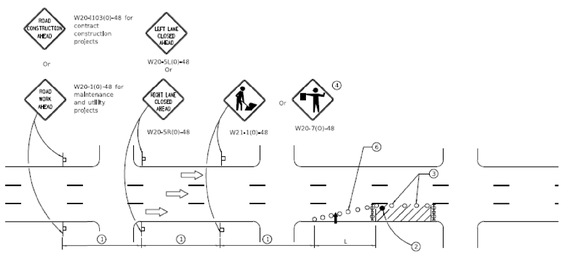

SIGN SPACING	
Posted Speed	Sign Spacing
55	500' (150 m)
50&45	350' (100 m)
<45	200' (60 m)

SYMBOLS

- Arrow board
- Cone, drum or barricade
- Sign on portable or permanent support
- Work area
- Barricade or drum with flashing light
- Type III barricade with flashing lights
- Flagger with traffic control sign.

1. Refer to SIGN SPACING TABLE for distances.
2. Required for speeds > 40 MPH
3. Cones at 25' (8 m) centers for 250' (75 m). Additional cones may be placed at 50' (15 m) centers. When drums or Type I or Type II barricades are used, the interval between devices may be doubled.
4. Use flagger sign only when flagger is present.
5. For approved sideroad closures.
6. Cones, drums or barricades at 20' (6 m) in taper.

GENERAL NOTES

This Standard is used where at any time, day or night, any vehicle, equipment, workers or their activities encroach on the pavement during shoulder operations or where construction requires lane closures in urban areas.

Calculate L as follows:

SPEED LIMIT	FORMULAS English	(Metric)
40 mph (70 km/h) or less:	$L=\frac{WS^2}{60}$	$L=\frac{WS^2}{150}$
45 mph (80 km/h) or greater:	L=(W)(S)	L=0.65(W)(S)

W = Width of offset in feet (meters).

S = Normal posted speed mph (km/h).

All dimensions are in inches (millimeters) unless otherwise shown.

DATE	REVISIONS
1-1-14	Revised workers sign
	number to agree with
	current MUTCD.
1-1-13	Omitted text "WORKERS"
	sign.

Illinois Department of Transportation
PASSED 1/1/2014 ENGINEER OF POLICY AND PROCEDURES
APPROVED 1/1/2014 ENGINEER OF BUREAU OF TRAFFIC
ENGINEER OF DESIGN AND ENVIRONMENT
FILE NAME = c:\701601-09.dgn

URBAN LANE CLOSURE, MULTILANE, 1W OR 2W WITH NONTRAVERSABLE MEDIAN
(Sheet 1 of 2)

STANDARD 701601-09

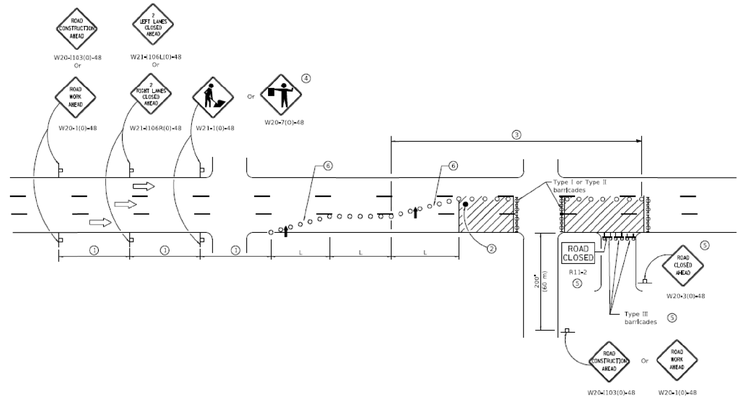

Illinois Department of Transportation
PASSED 1/1/2014 ENGINEER OF POLICY AND PROCEDURES
APPROVED 1/1/2014 ENGINEER OF BUREAU OF TRAFFIC
ENGINEER OF DESIGN AND ENVIRONMENT
FILE NAME = c:\701601-09.dgn

URBAN LANE CLOSURE, MULTILANE, 1W OR 2W WITH NONTRAVERSABLE MEDIAN
(Sheet 2 of 2)

STANDARD 701601-09

DESIGN BY:										
DRAWN BY:										
CHECKED BY:										
APPROVED BY:		4	7/3/2023	ISSUED FOR BID	MRT	MRT	CJD		
CDOT/APPROVED BY:		NO.	DATE	REVISIONS	DES.	DRW.	CHK.	DCCO	CDOT

TRANSYSTEMS
222 SOUTH RIVERSIDE PLAZA SUITE 610
CHICAGO, ILLINOIS 60606

SKIDMORE, OWINGS & MERRILL LLP
224 SOUTH MICHIGAN AVENUE, SUITE 1000
CHICAGO, ILLINOIS 60604

ARDMORE RODERICK
1500 W CARROLL AVE SUITE 300
CHICAGO, ILLINOIS 60607

LICENSED PROFESSIONAL ENGINEER
CARMEN J. DEAN
062-062138
STATE OF ILLINOIS

CHICAGO DEPARTMENT OF TRANSPORTATION
DIVISION OF ENGINEERING

STATE / LAKE LOOP ELEVATED STATION
200 NORTH STATE STREET, CHICAGO, IL 60601

IDOT DISTRICT TRAFFIC CONTROL STANDARDS

CDOT PROJECT D-1-209 | DATE: 7/3/2023

SPEC. NO.

DRAWING NO. CX-901

REVISION NO.

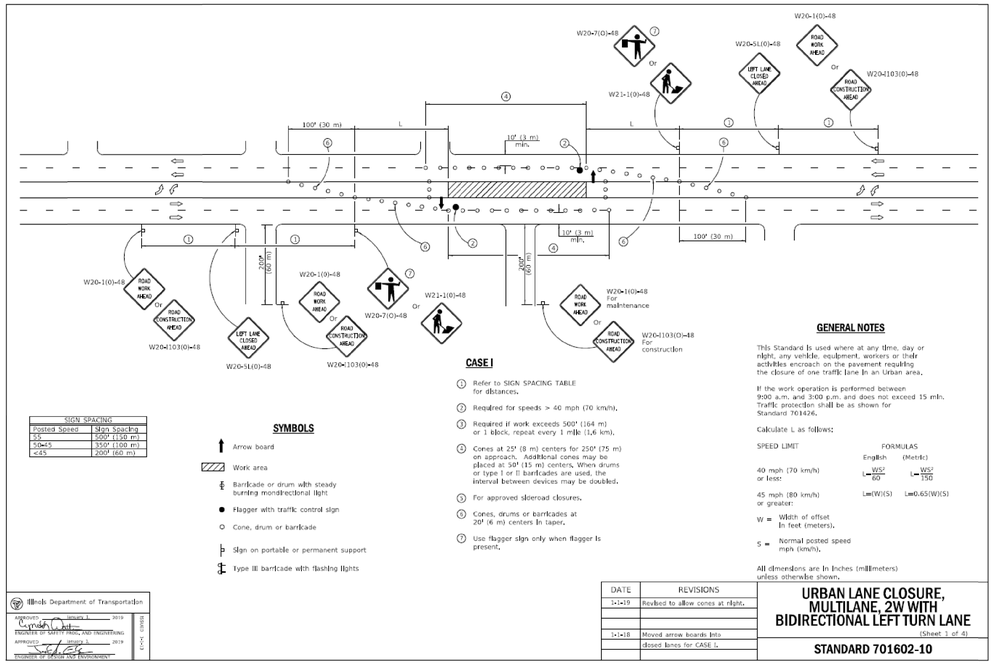

SIGN SPACING	
Posted Speed	Sign Spacing
55	500' (150 m)
50 or 45	350' (100 m)
≤ 45	250' (60 m)

SYMBOLS

- Arrow board
- Work area
- Barricade or drum with steady burning monodirectional light
- Flagger with traffic control sign
- Cone, drum or barricade
- Sign on portable or permanent support
- Type III barricade with flashing lights

CASE I

1. Refer to SIGN SPACING TABLE for distances.
2. Required for speeds > 40 mph (70 km/h).
3. Required if work exceeds 500' (164 m) or 1 block, repeat every 1 mile (1.6 km).
4. Cones at 25' (8 m) centers for 250' (75 m) on approach. Additional cones may be placed at 50' (15 m) centers. When drums or type I or II barricades are used, the interval between devices may be doubled.
5. For approved sideroad closures.
6. Cones, drums or barricades at 20' (6 m) centers in taper.
7. Use flagger sign only when flagger is present.

GENERAL NOTES

This Standard is used where at any time, day or night, any vehicle, equipment, workers or their activities encroach on the pavement requiring the closure of one traffic lane in an urban area.

If the work operation is performed between 9:00 a.m. and 3:00 p.m. and does not exceed 15 min. Traffic protection shall be as shown for Standard 701426.

Calculate L as follows:

SPEED LIMIT	FORMULAS English	(Metric)
40 mph (70 km/h) or less:	$L=\frac{WS^2}{60}$	$L=\frac{WS^2}{150}$
45 mph (80 km/h) or greater:	L=(W)(S)	L=0.65(W)(S)

W = Width of offset in feet (meters).

S = Normal posted speed mph (km/h).

All dimensions are in inches (millimeters) unless otherwise shown.

DATE	REVISIONS
1-1-19	Revised to allow cones at right.
1-1-18	Moved arrow boards into
	closed lanes for CASE I.

Illinois Department of Transportation

APPROVED _____ ISSUED 1-1-2019
ENGINEER OF SAFETY, TRAFFIC, AND ENGINEERING

APPROVED _____ ISSUED 1-1-2019
ENGINEER OF BUREAU OF ENVIRONMENT

LOCAL ROADS

URBAN LANE CLOSURE, MULTILANE, 2W WITH BIDIRECTIONAL LEFT TURN LANE
(Sheet 1 of 4)

STANDARD 701602-10

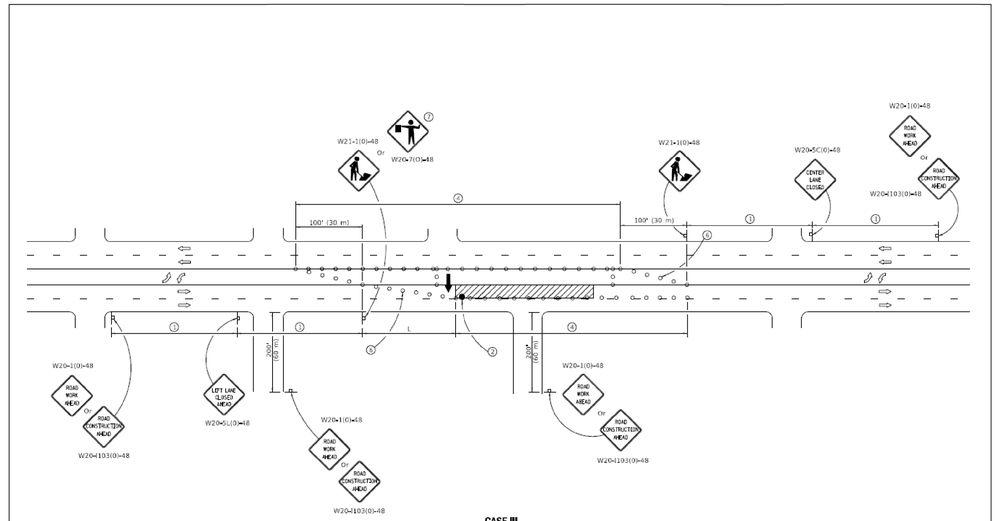

CASE III

Illinois Department of Transportation

APPROVED _____ ISSUED 1-1-2019
ENGINEER OF SAFETY, TRAFFIC, AND ENGINEERING

APPROVED _____ ISSUED 1-1-2019
ENGINEER OF BUREAU OF ENVIRONMENT

LOCAL ROADS

URBAN LANE CLOSURE, MULTILANE, 2W WITH BIDIRECTIONAL LEFT TURN LANE
(Sheet 3 of 4)

STANDARD 701602-10

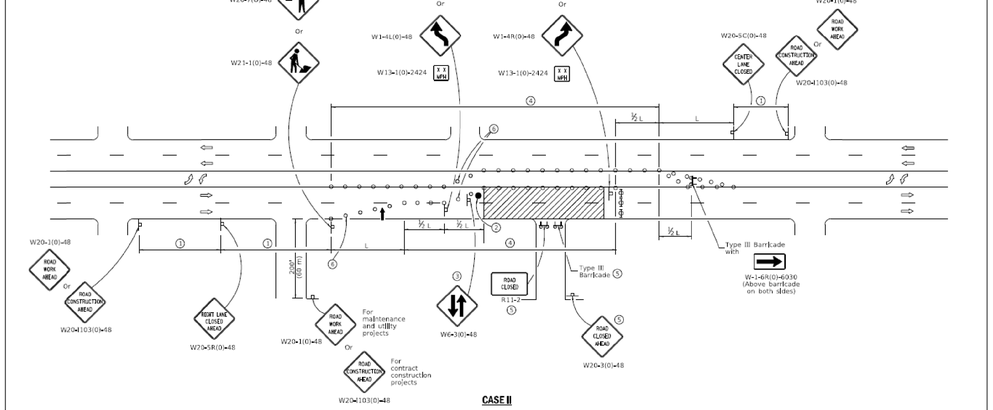

CASE II

Illinois Department of Transportation

APPROVED _____ ISSUED 1-1-2019
ENGINEER OF SAFETY, TRAFFIC, AND ENGINEERING

APPROVED _____ ISSUED 1-1-2019
ENGINEER OF BUREAU OF ENVIRONMENT

LOCAL ROADS

URBAN LANE CLOSURE, MULTILANE, 2W WITH BIDIRECTIONAL LEFT TURN LANE
(Sheet 2 of 4)

STANDARD 701602-10

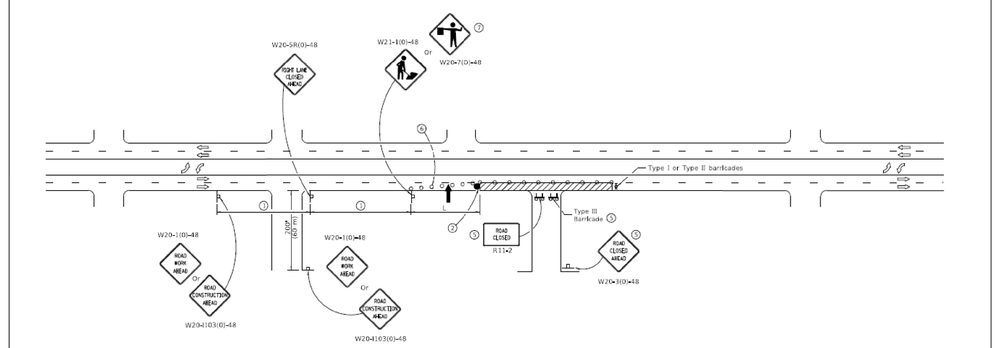

CASE IV

Illinois Department of Transportation

APPROVED _____ ISSUED 1-1-2019
ENGINEER OF SAFETY, TRAFFIC, AND ENGINEERING

APPROVED _____ ISSUED 1-1-2019
ENGINEER OF BUREAU OF ENVIRONMENT

LOCAL ROADS

URBAN LANE CLOSURE, MULTILANE, 2W WITH BIDIRECTIONAL LEFT TURN LANE
(Sheet 4 of 4)

STANDARD 701602-10

DESIGN BY:										
DRAWN BY:										
CHECKED BY:										
APPROVED BY:		4	7/3/2023	ISSUED FOR BID	MRT	MRT	CJD			
CDOT/APPROVED BY:		NO.	DATE	REVISIONS	DES.	DRW.	CHK.	DCCO	CDOT	

TRANSYSTEMS
222 SOUTH RIVERSIDE PLAZA SUITE 610
CHICAGO, ILLINOIS 60606

SOM
SKIDMORE, OWINGS & MERRILL LLP
224 SOUTH MICHIGAN AVENUE, SUITE 1000
CHICAGO, ILLINOIS 60604

Ardmore Roderick
ARDMORE RODERICK
1500 W CARROLL AVE SUITE 300
CHICAGO, ILLINOIS 60607

LICENSED PROFESSIONAL ENGINEER
CARMEN J. DEAN
062-062138
STATE OF ILLINOIS

CDOT
CHICAGO DEPARTMENT OF TRANSPORTATION
DIVISION OF ENGINEERING

STATE / LAKE LOOP ELEVATED STATION
200 NORTH STATE STREET, CHICAGO, IL 60601

IDOT TRAFFIC CONTROL STANDARDS

SPEC. NO.

DRAWING NO.
CX-902

CDOT PROJECT D-1-209 | DATE: 7/3/2023 | REVISION NO.

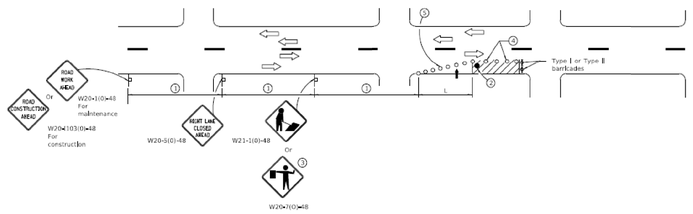

SIGN SPACING	
Posted Speed	Sign Spacing
55	500' (150 m)
50&45	350' (100 m)
<45	200' (60 m)

SYMBOLS

- Arrow board
- Cone, drum or barricade
- Sign on portable or permanent support
- Work area
- Barricade or drum with flashing light
- Flagger with traffic control sign.

1. Refer to SIGN SPACING TABLE for distances.
2. Required for speeds > 40 mph.
3. Use flagger sign only when flagger is present.
4. Cones at 25' (8 m) centers for 250' (75 m). Additional cones may be placed at 50' (15 m) centers. When drums or Type I or Type II barricades are used, the interval between devices may be doubled.
5. Cones, drums or barricades at 20' (6 m) centers in taper.

GENERAL NOTES

This Standard is used where at any time, day or night, any vehicle, equipment, workers or their activities encroach on the pavement requiring the closure of one traffic lane in an Urban area.

Calculate L as follows:

SPEED LIMIT	FORMULAS (English)	FORMULAS (Metric)
40 mph (70 km/h) or less	$L=\frac{WS^2}{60}$	$L=\frac{WS^2}{150}$
45 mph (80 km/h) or greater	L=WS	L=0.6SW

W = Width of offset in feet (meters).

S = Normal posted speed mph (km/h)

All dimensions are in inches (millimeters) unless otherwise shown.

Illinois Department of Transportation

PASSED: Jan 8, 2015 — ENGINEER OF SAFETY ENGINEERING

APPROVED: Jan 8, 2015 — ENGINEER OF DESIGN AND ENVIRONMENT

DATE: 1-1-15

DATE	REVISIONS
1-1-15	Renamed standard. Moved case on Sheet 2 to new Highway Standard.
1-1-14	Revised workers sign number to agree with current MUTCD.

URBAN SINGLE LANE CLOSURE, MULTILANE, 2W WITH MOUNTABLE MEDIAN

STANDARD 701606-10

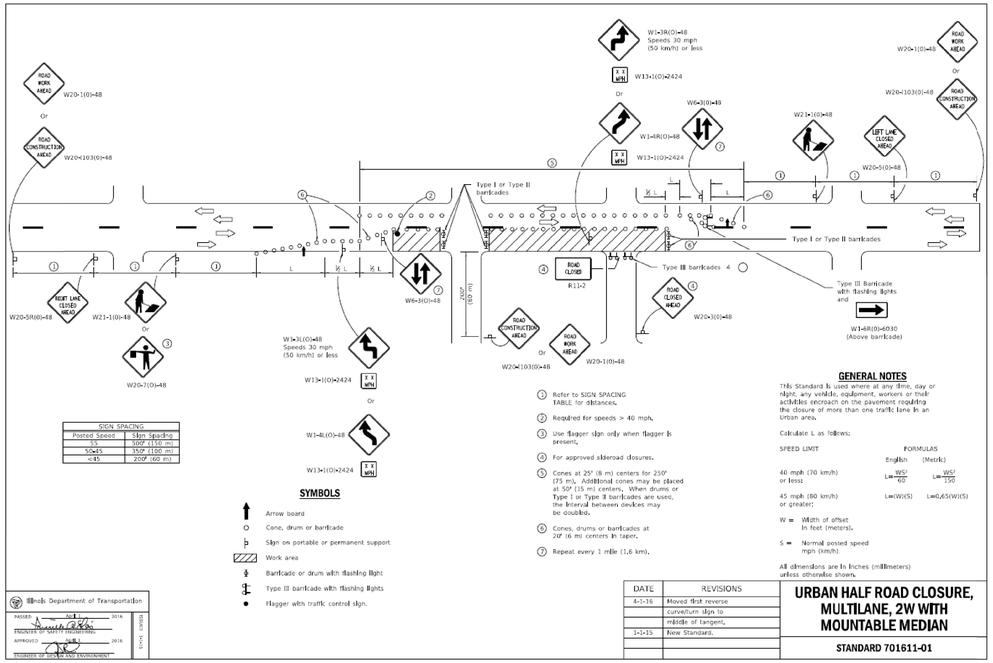

SIGN SPACING	
Posted Speed	Sign Spacing
55	500' (150 m)
50&45	350' (100 m)
<45	200' (60 m)

SYMBOLS

- Arrow board
- Cone, drum or barricade
- Sign on portable or permanent support
- Work area
- Barricade or drum with flashing light
- Type III barricade with flashing lights
- Flagger with traffic control sign.

1. Refer to SIGN SPACING TABLE for distances.
2. Required for speeds > 40 mph.
3. Use flagger sign only when flagger is present.
4. For approved sideroad closures.
5. Cones at 25' (8 m) centers for 250' (75 m). Additional cones may be placed at 50' (15 m) centers. When drums or Type I or Type II barricades are used, the interval between devices may be doubled.
6. Cones, drums or barricades at 20' (6 m) centers in taper.
7. Repeat every 1 mile (1.6 km).

GENERAL NOTES

This Standard is used where at any time, day or night, any vehicle, equipment, workers or their activities encroach on the pavement requiring the closure of more than one traffic lane in an Urban area.

Calculate L as follows:

SPEED LIMIT	FORMULAS (English)	FORMULAS (Metric)
40 mph (70 km/h) or less	$L=\frac{WS^2}{60}$	$L=\frac{WS^2}{150}$
45 mph (80 km/h) or greater	L=WS	L=0.6SW

W = Width of offset in feet (meters).

S = Normal posted speed mph (km/h)

All dimensions are in inches (millimeters) unless otherwise shown.

Illinois Department of Transportation

PASSED: Jan 8, 2016 — ENGINEER OF SAFETY ENGINEERING

APPROVED: Jan 8, 2016 — ENGINEER OF DESIGN AND ENVIRONMENT

DATE: 1-1-16

DATE	REVISIONS
4-1-16	Moved first reverse curve/turn sign to middle of tangent.
1-1-15	New Standard.

URBAN HALF ROAD CLOSURE, MULTILANE, 2W WITH MOUNTABLE MEDIAN

STANDARD 701611-01

DESIGN BY:										
DRAWN BY:										
CHECKED BY:										
APPROVED BY:		4	7/3/2023	ISSUED FOR BID	MRT	MRT	CJD			
CDOT/APPROVED BY:		NO.	DATE	REVISIONS	DES.	DRW.	CHK.	DCCO	CDOT	

TRANSYSTEMS
222 SOUTH RIVERSIDE PLAZA SUITE 610
CHICAGO, ILLINOIS 60606

SKIDMORE, OWINGS & MERRILL LLP
224 SOUTH MICHIGAN AVENUE, SUITE 1000
CHICAGO, ILLINOIS 60604

ARDMORE RODERICK
1500 W CARROLL AVE SUITE 300
CHICAGO, ILLINOIS 60607

LICENSED PROFESSIONAL ENGINEER — CARMEN J. DEAN — 062-062138 — STATE OF ILLINOIS

CHICAGO DEPARTMENT OF TRANSPORTATION
DIVISION OF ENGINEERING

STATE / LAKE LOOP ELEVATED STATION
200 NORTH STATE STREET, CHICAGO, IL 60601

IDOT TRAFFIC CONTROL STANDARDS

CDOT PROJECT D-1-209 | DATE: 7/3/2023

SPEC. NO.

DRAWING NO. CX-903

REVISION NO.

F.A. ROUTE NO.	SECTION	COUNTY	TOTAL SHEETS	SHEET NO.
		COOK	CTS-101	
FHWA REG. NO.	ILLINOIS	PROJECT		

NORTH PROPOSED CONDUIT STA. 105+47

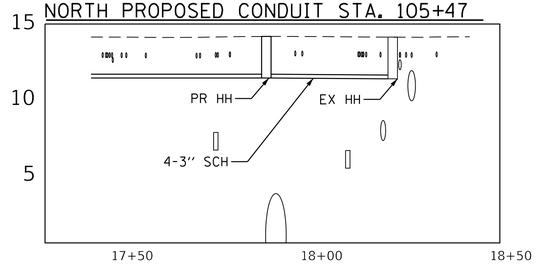

SOUTH PROPOSED CONDUIT STA. 104+70

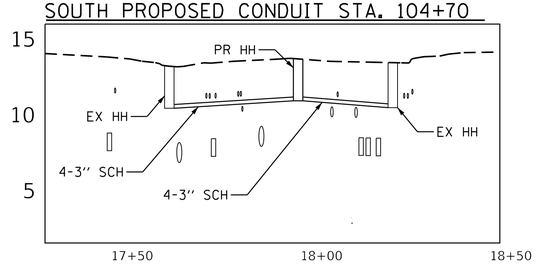

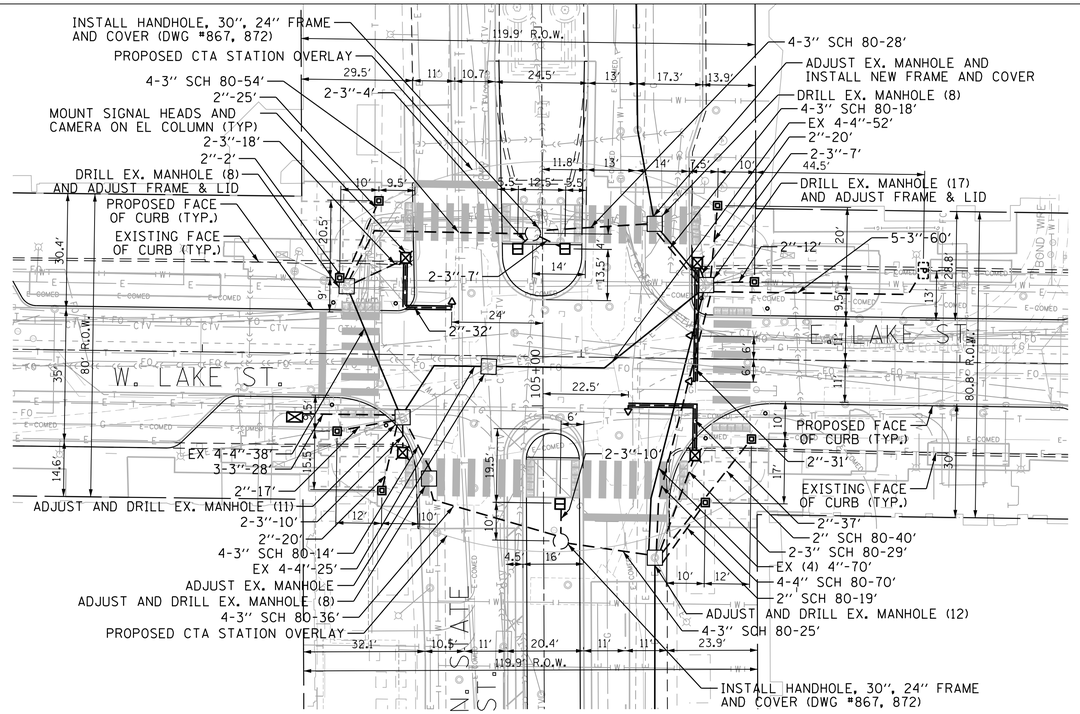

FOUNDATION AND CONDUIT PLAN

SCALE: 1" = 20'

N

LEGEND

- HORIZONTALLY MOUNTED SIGNAL HEAD MOUNTED TO "EL" STRUCTURE LOCATION OF SIGNAL FACE AND MOUNTING METHOD TO BE APPROVED BY THE ENGINEER
- 2" PVC COATED GALVANIZED STEEL CONDUIT ATTACHED TO "EL" STRUCTURE
- LOCATION OF PROPOSED APS PUSHBUTTON POST
- FOUNDATION FOR THE 15' ORNAMENTAL POLE WITH 15" BOLT CIRCLE (DWG #818).

NOTES:

1. PROPOSED SIGNAL CONTROLLERS SHALL BE ADVANCED TRAFFIC SIGNAL CONTROLLERS APPROVED BY CDOT DIVISION OF ENGINEERING.
2. PTZ DOME CAMERA AND ASSOCIATED EQUIPMENT SHALL BE REMOVED AND RELOCATED BY OEMC. CONTRACTOR SHALL COORDINATE WITH OEMC AS NEEDED.

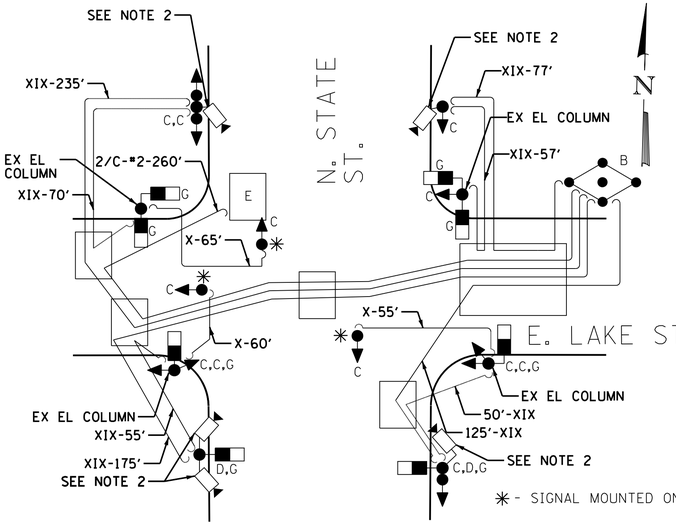

✳ - SIGNAL MOUNTED ON STRUCTURE

SIGNAL REMOVAL NOTES

A- BREAKDOWN POLE, POST OR CONTROLLER FOUNDATION
B- REMOVE TRAFFIC CONTROLLER AND CABINET
C- REMOVE TRAFFIC SIGNALS
D- REMOVE TRAFFIC SIGNAL POST
F- REMOVE TRAFFIC CONTROLLER FROM EXISTING CABINET
G- REMOVE PEDESTRIAN SIGNALS
I- REMOVE EXISTING CIRCUIT BREAKER
J- CLEAN EXISTING MANHOLE/HANDHOLE
K- ROD AND CLEAN EXISTING CONDUIT
#-# ABANDON EXISTING CONDUIT
REMOVE ELECTRICAL CABLE

SIGNAL AND CABLE REMOVAL PLAN

NOT TO SCALE

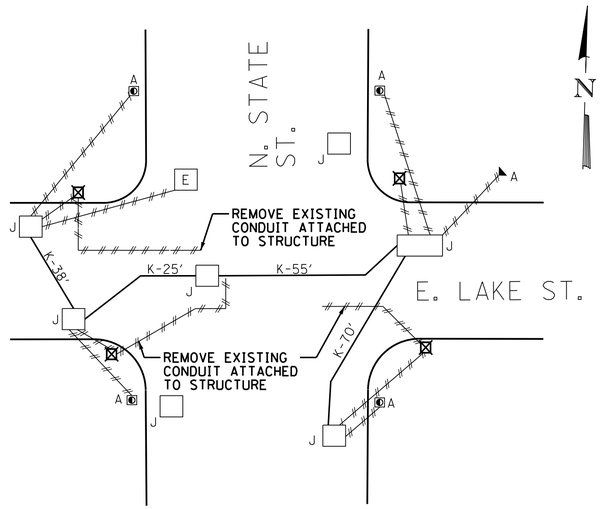

FOUNDATION AND CONDUIT REMOVAL PLAN

NOT TO SCALE

GAURAV RAI
062-065565
LICENSED PROFESSIONAL ENGINEER OF
STATE OF ILLINOIS

NO.	DATE	REVISION

SUPERSEDES DRAWING NO. : 12020 DATED: 12/07/1995

OUC NO. _____ DATE _____

APPOX. ADDRESS _____

WORK ORDER NO. _____ DATE _____

COST ALLOCATION ACCOUNT _____

APPROPRIATION ACCOUNT { MATERIAL _____ LABOR _____

TRAFFIC CONTROL SIGNALS N. STATE ST. AND E-W. LAKE ST.

DEPARTMENT OF TRANSPORTATION
DIVISION OF ENGINEERING
ELECTRICAL SECTION

DRAFTSMAN:	CHIEF DRAFTSMAN:	ENGINEER:
TRAFFIC ENGINEER:	ELEC. DESIGN ENGR.	DWG. NO.
ENGINEER OF ELECTRICITY:		12020
SUPT. OF CONSTRUCTION:		
DEPUTY COMMISSIONER:		
SIZE: 22" | 34"	SCALE: AS NOTED	DATE: 9/9/2022

TranSystems

$FILE$
3:00:35 PM
8/17/2023

F.A. ROUTE NO.	SECTION	COUNTY	TOTAL SHEETS	SHEET NO.
		COOK		CTS-102
FHWA REG. NO.	ILLINOIS	PROJECT		

SIGNAL INSTALLATION LEGEND

- C — PROPOSED PEDESTRIAN COUNTDOWN SIGNAL
- PROPOSED ACCESSIBLE PEDESTRIAN PUSHBUTTON (APS)
- PROPOSED ORNAMENTAL APS PUSHBUTTON POST
- 360° — INSTALL FIELD CABINET INTEGRATION EQUIPMENT AND DETECTION EQUIPMENT AND DETECTION PROCESSOR WITH VIDEO CAMERA
- R Y G — SIGNAL HEAD MOUNTED TO "EL" STRUCTURE MOUNTED HORIZONTALLY
- J — 12"x12"x6" STAINLESS STEEL NEMA JUNCTION BOX MOUNTED ON "EL" SUPPORT
- PROPOSED STRUCTURAL BENT COLUMN
- PROPOSED ORNAMENTAL TRAFFIC SIGNAL POST, 15 FT

INSTALL CIRCUIT BREAKER, 1-POLE, 70 AMP, 600V IN PROPOSED STREET LIGHT CONTROLLER

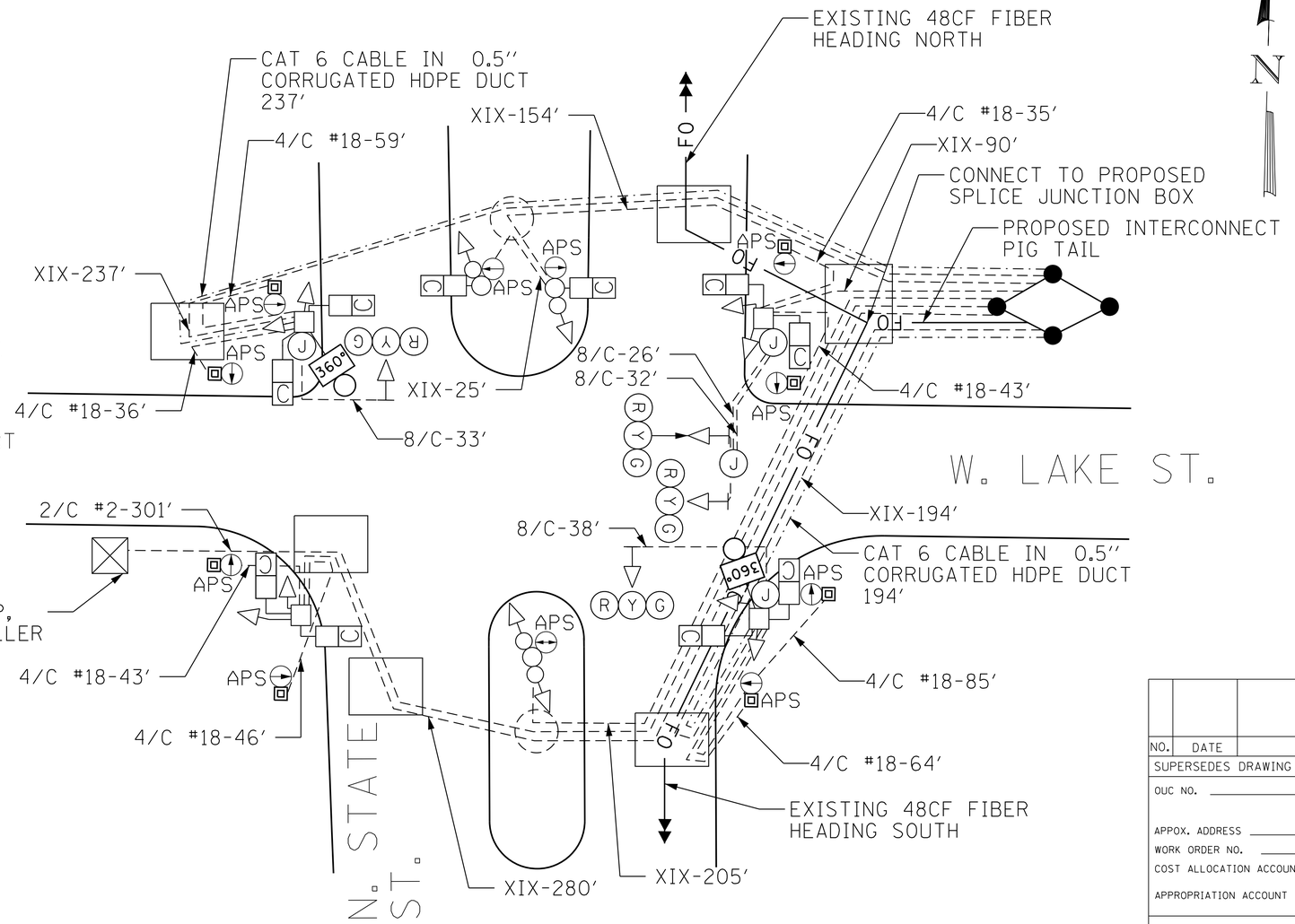

SIGNAL AND CABLE PLAN

NOT TO SCALE

GAURAV RAI
062-065565
LICENSED PROFESSIONAL ENGINEER OF STATE OF ILLINOIS

NO.	DATE	REVISION

SUPERSEDES DRAWING NO. : 12020 DATED:12/07/1995

OUC NO. _____ DATE _____

APPOX. ADDRESS _____

WORK ORDER NO. _____ DATE _____

COST ALLOCATION ACCOUNT _____

APPROPRIATION ACCOUNT { MATERIAL _____ LABOR _____

TRAFFIC CONTROL SIGNALS N. STATE ST. AND E-W. LAKE ST.

DEPARTMENT OF TRANSPORTATION
DIVISION OF ENGINEERING
ELECTRICAL SECTION

DRAFTSMAN:	CHIEF DRAFTSMAN:	ENGINEER:
TRAFFIC ENGINEER:	ELEC. DESIGN ENGR.	DWG. NO.
ENGINEER OF ELECTRICITY:		12020
SUPT. OF CONSTRUCTION:		
DEPUTY COMMISSIONER:		
SIZE: 22" | 34"	SCALE: AS NOTED	DATE: 9/9/2022

TranSystems

11/1/2023 11:21:23 AM $FILES

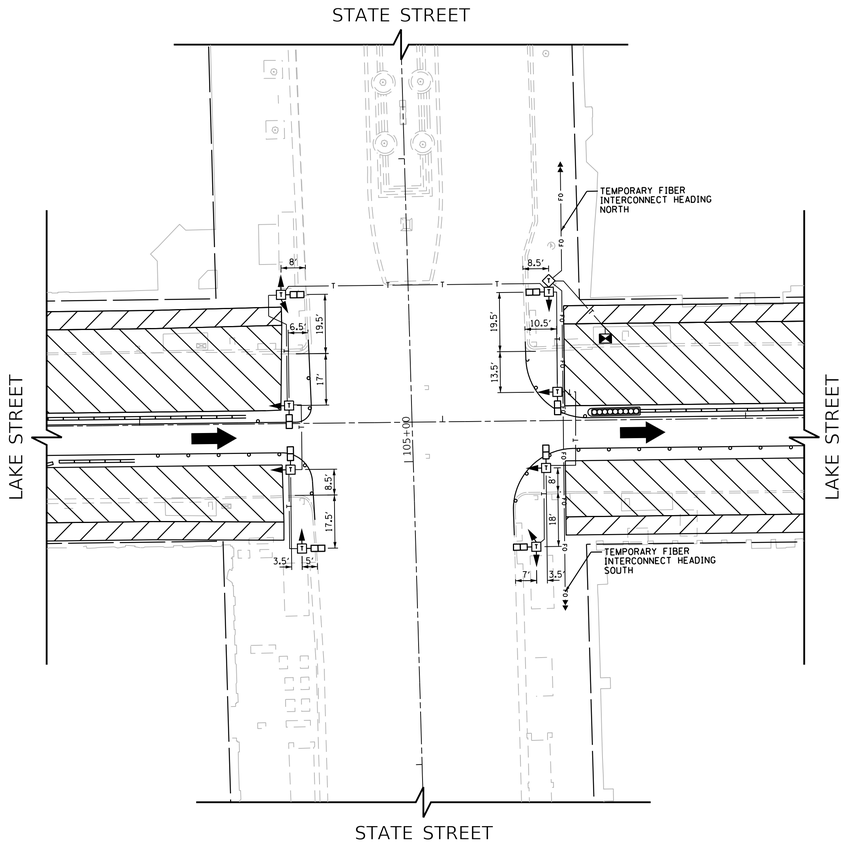

MOT STAGE A

LAKE STREET - NORTH SIDE PRIMARY CLOSURE

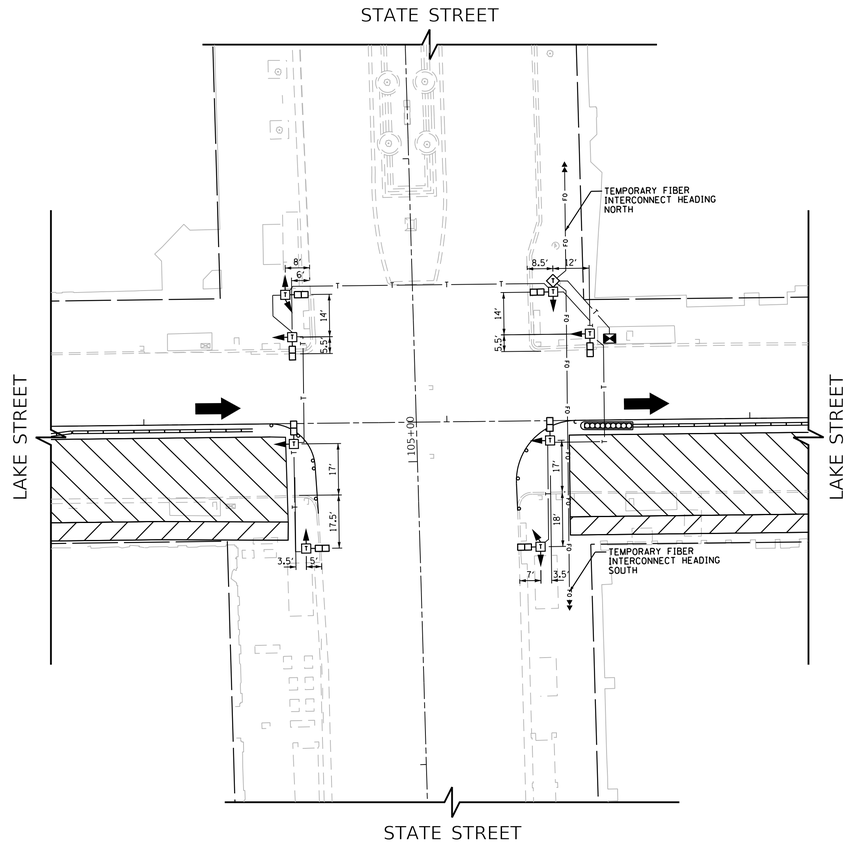

MOT STAGE B

LAKE STREET - SOUTH SIDE CLOSURE

LEGEND

- 3'x3'x3' CONCRETE FOUNDATION WITH TEMPORARY SIGNAL POST
- TEMPORARY OVERHEAD TRAFFIC SIGNAL CABLES AND SERVICE CABLE
- PEDESTRIAN SIGNAL HEAD
- TEMPORARY CONTROLLER CABINET
- THREE SECTION SIGNAL HEAD
- EXISTING TRAFFIC SIGNAL CONTROLLER
- DIRECTION OF TRAFFIC
- WORK ZONE
- PEDWAY

NOTES

1. THE TEMPORARY TRAFFIC SIGNAL HEADS SHALL BE PLACED AS INDICATED ON THE TEMPORARY TRAFFIC SIGNAL PLANS OR AS DIRECTED BY THE COMMISSIONER.
2. THE CONTRACTOR IS RESPONSIBLE FOR TEMPORARILY RELOCATING TRAFFIC SIGNALS AS REQUIRED DURING CONSTRUCTION. NO TRAFFIC SIGNALS MAY BE MODIFIED IN ANY WAY WITHOUT THE PERMISSION OF THE COMMISSIONER AND CDOT-DEO.
3. THE CONTRACTOR IS ADVISED THAT THE EXISTING TRAFFIC SIGNALS OR THE EXISTING TEMPORARY INSTALLATION, MUST REMAIN IN OPERATION DURING ALL CONSTRUCTION STAGES EXCEPT INSTALLATION, FOR A PERIOD TO EXCEED FIFTEEN (15) MINUTES. THE CHANGEOVER PERIODS MUST BE SCHEDULED IN ADVANCE WITH THE COMMISSIONER. SUCH APPROVAL WILL GENERALLY ONLY BE GRANTED DURING THE PERIOD EXTENDING FROM 10:00 A.M. TO 3:00 P.M. ON WEEKDAYS. ANY OTHER TRAFFIC SIGNAL SHUTDOWN, EITHER FOR PERIODS IN EXCESS OF ONE (1) HOUR OR OUTSIDE OF THE 10:00 A.M. TO 3:00 P.M. WEEKDAY PERIOD MUST HAVE PRIOR APPROVAL OF THE COMMISSIONER.
4. THE CONTRACTOR SHALL INSTALL 70 AMPERE CIRCUIT BREAKERS TO EXISTING POWER SUPPLY FOR THE TEMPORARY TRAFFIC SIGNAL OR AS DIRECTED BY THE COMMISSIONER.
5. ALL EXISTING STREET NAME AND INTERSECTION REGULATORY SIGNS SHALL BE REMOVED FROM EXISTING POLES, RELOCATED AND SECURELY FASTENED TO THE TEMPORARY TRAFFIC SIGNAL POLES.
6. ALL TEMPORARY TRAFFIC SIGNAL CONTROLLERS SHALL BE BANDED TO THE TEMPORARY TRAFFIC SIGNAL POLE.

DESIGN BY:										
DRAWN BY:										
CHECKED BY:										
APPROVED BY:		4	7/3/2023	ISSUED FOR BID						
CDOT/APPROVED BY:		NO.	DATE	REVISIONS	DES.	DRW.	CHK.	DCCO	CDOT	

TRANSYSTEMS
222 SOUTH RIVERSIDE PLAZA SUITE 610
CHICAGO, ILLINOIS 60606

SKIDMORE, OWINGS & MERRILL LLP
224 SOUTH MICHIGAN AVENUE, SUITE 1000
CHICAGO, ILLINOIS 60604

GAURAV RAI
062-065565
LICENSED PROFESSIONAL ENGINEER
OF
STATE OF ILLINOIS

CHICAGO DEPARTMENT OF TRANSPORTATION
DIVISION OF ENGINEERING

STATE / LAKE LOOP ELEVATED STATION
200 NORTH STATE STREET, CHICAGO, IL 60601

TEMPORARY TRAFFIC SIGNAL PLAN
STATE AND LAKE STREET

CDOT PROJECT D-1-209

DATE: 7/3/2023

SPEC. NO.

DRAWING NO.
CTS-103

REVISION NO.

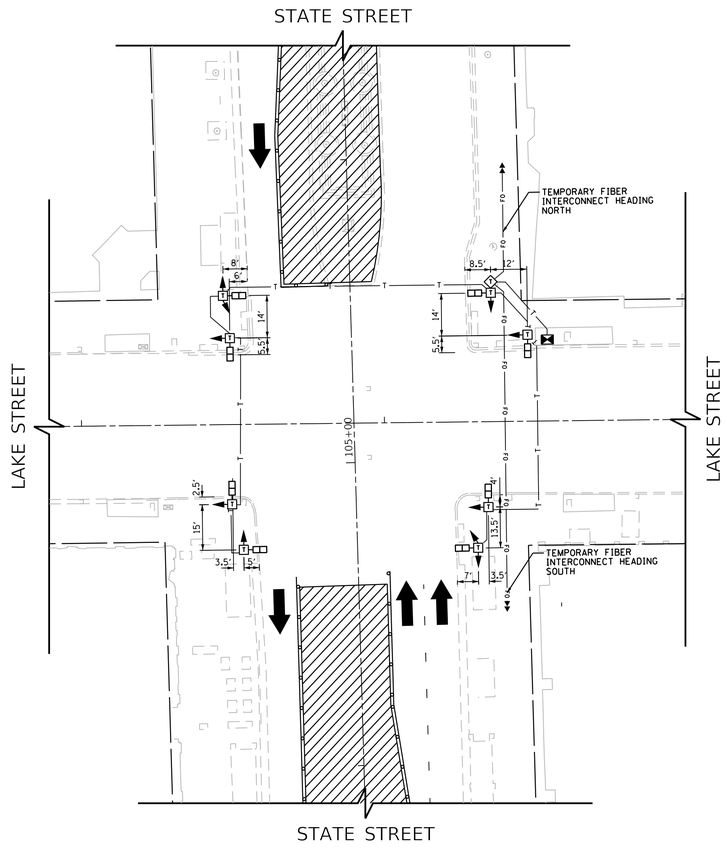

MOT STAGE C
STATE STREET - SPLIT LANES

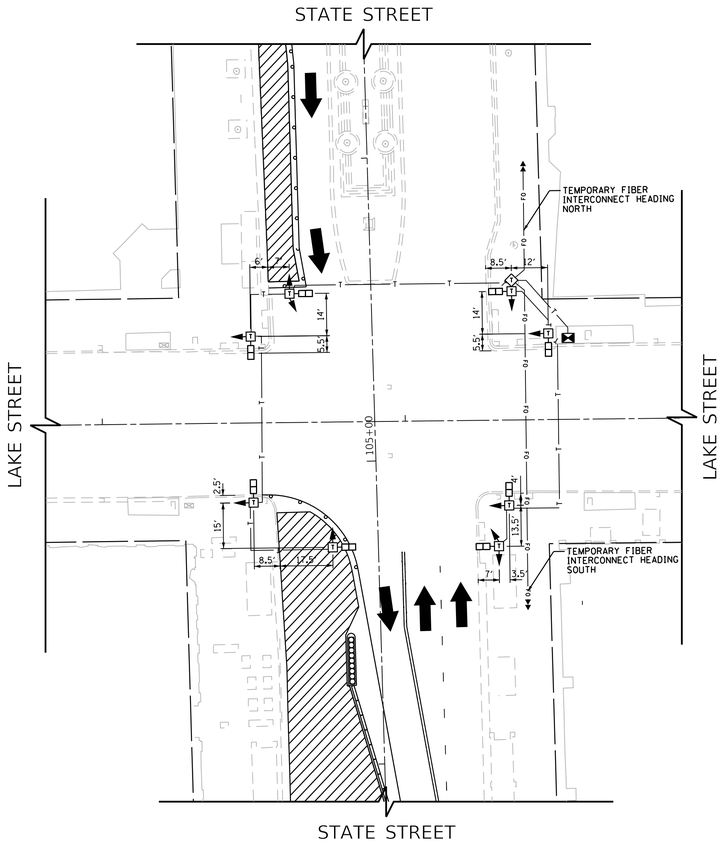

MOT STAGE D
STATE STREET - WEST SIDE CLOSURE 1

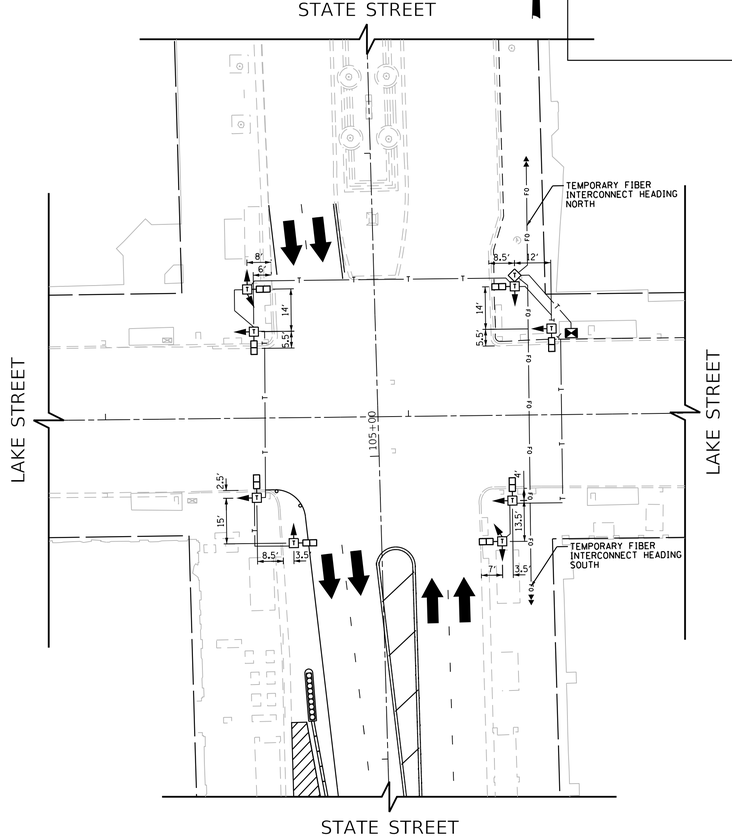

MOT STAGE E
STATE STREET - WEST SIDE CLOSURE 2

LEGEND

- T — 3'x3'x3' CONCRETE FOUNDATION WITH TEMPORARY SIGNAL POST
- —T— TEMPORARY OVERHEAD TRAFFIC SIGNAL CABLES AND SERVICE CABLE
- PEDESTRIAN SIGNAL HEAD
- T — TEMPORARY CONTROLLER CABINET
- THREE SECTION SIGNAL HEAD
- EXISTING TRAFFIC SIGNAL CONTROLLER
- DIRECTION OF TRAFFIC
- WORK ZONE
- PEDWAY

NOTES

1. THE TEMPORARY TRAFFIC SIGNAL HEADS SHALL BE PLACED AS INDICATED ON THE TEMPORARY TRAFFIC SIGNAL PLANS OR AS DIRECTED BY THE COMMISSIONER.
2. THE CONTRACTOR IS RESPONSIBLE FOR TEMPORARILY RELOCATING TRAFFIC SIGNALS AS REQUIRED DURING CONSTRUCTION. NO TRAFFIC SIGNALS MAY BE MODIFIED IN ANY WAY WITHOUT THE PERMISSION OF THE COMMISSIONER AND CDOT-DEO.
3. THE CONTRACTOR IS ADVISED THAT THE EXISTING TRAFFIC SIGNALS OR THE EXISTING TEMPORARY INSTALLATION, MUST REMAIN IN OPERATION DURING ALL CONSTRUCTION STAGES EXCEPT INSTALLATION, FOR A PERIOD TO EXCEED FIFTEEN (15) MINUTES. THE CHANGEOVER PERIODS MUST BE SCHEDULED IN ADVANCE WITH THE COMMISSIONER. SUCH APPROVAL WILL GENERALLY ONLY BE GRANTED DURING THE PERIOD EXTENDING FROM 10:00 A.M. TO 3:00 P.M. ON WEEKDAYS. ANY OTHER TRAFFIC SIGNAL SHUTDOWN, EITHER FOR PERIODS IN EXCESS OF ONE (1) HOUR OR OUTSIDE OF THE 10:00 A.M. TO 3:00 P.M. WEEKDAY PERIOD MUST HAVE PRIOR APPROVAL OF THE COMMISSIONER.
4. THE CONTRACTOR SHALL INSTALL 70 AMPERE CIRCUIT BREAKERS TO EXISTING POWER SUPPLY FOR THE TEMPORARY TRAFFIC SIGNAL OR AS DIRECTED BY THE COMMISSIONER.
5. ALL EXISTING STREET NAME AND INTERSECTION REGULATORY SIGNS SHALL BE REMOVED FROM EXISTING POLES, RELOCATED AND SECURELY FASTENED TO THE TEMPORARY TRAFFIC SIGNAL POLES.
6. ALL TEMPORARY TRAFFIC SIGNAL CONTROLLERS SHALL BE BANDED TO THE TEMPORARY TRAFFIC SIGNAL POLE.

DESIGN BY:										
DRAWN BY:										
CHECKED BY:										
APPROVED BY:		4	7/3/2023	ISSUED FOR BID						
CDOT/APPROVED BY:		NO.	DATE	REVISIONS	DES.	DRW.	CHK.	DCCO	CDOT	

TRANSYSTEMS
222 SOUTH RIVERSIDE PLAZA SUITE 610
CHICAGO, ILLINOIS 60606

SKIDMORE, OWINGS & MERRILL LLP
224 SOUTH MICHIGAN AVENUE, SUITE 1000
CHICAGO, ILLINOIS 60604

GAURAV RAI
062-065565
LICENSED PROFESSIONAL ENGINEER OF
STATE OF ILLINOIS

CHICAGO DEPARTMENT OF TRANSPORTATION
DIVISION OF ENGINEERING

STATE / LAKE LOOP ELEVATED STATION
200 NORTH STATE STREET, CHICAGO, IL 60601

SPEC. NO.

TEMPORARY TRAFFIC SIGNAL PLAN
STATE AND LAKE STREET

DRAWING NO.
CTS-104

CDOT PROJECT D-1-209

DATE: 7/3/2023

REVISION NO.

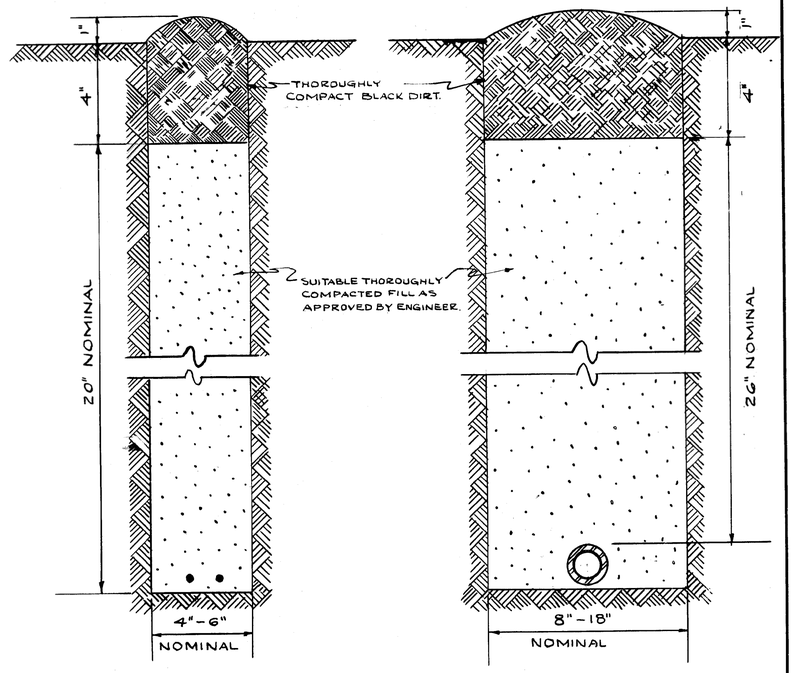

CABLE TRENCH

CONDUIT TRENCH

NOTE

EXCESS SOIL FROM TRENCH TO BE COMPLETELY REMOVED FROM SITE AS SOON AS PRACTICABLE.

BLACK DIRT TO BE TAMPED & THOROUGHLY COMPACTED AS SHOWN.

STANDARD METHOD FOR BACKFILLING CABLE & CONDUIT TRENCHES IN SODDED PARKWAY & LAWNS

REVISION	CITY OF CHICAGO		
A	DEPT. OF STREETS & SANITATION		
B	DIVISION OF ELECTRICAL ENGINEERING		
C	DRAWN. W. E. HAEP.	CHECKED. M. J. Kline	ENGINEER. J. O'CONNOR.
D	ENGR IN CHARGE. [illegible]		DRG. NO. 579
E	SUPT. OF CONST. [illegible]		
F	SUPT. OF COMM. [illegible]		
G	SIZE. 8½"x14"	SCALE: N	DATE: 7-14-61
H			

DESIGN BY:											
DRAWN BY:											
CHECKED BY:											
APPROVED BY:		4	7/3/2023	ISSUED FOR BID	BTW	BTW	MJL				
CDOT/APPROVED BY:		NO.	DATE	REVISIONS	DES.	DRW.	CHK.	DCCO	CDOT		

TRANSYSTEMS
222 SOUTH RIVERSIDE PLAZA SUITE 610
CHICAGO, ILLINOIS 60606

SKIDMORE, OWINGS & MERRILL LLP
224 SOUTH MICHIGAN AVENUE, SUITE 1000
CHICAGO, ILLINOIS 60604

CHICAGO DEPARTMENT OF TRANSPORTATION
DIVISION OF ENGINEERING

STATE / LAKE LOOP ELEVATED STATION
200 NORTH STATE STREET, CHICAGO, IL 60601

DEO STANDARD DRAWINGS

CDOT PROJECT D-1-209

DATE: 7/3/2023

SPEC. NO.

DRAWING NO. CTS-105

REVISION NO.

NOTE: TERMINATE ALL METALLIC CONDUIT WITH GROUNDING BUSHING & GROUND TO GROUND ROD
WHEN METALLIC CONDUIT IS USED DELETE GROUNDING CONDUCTOR

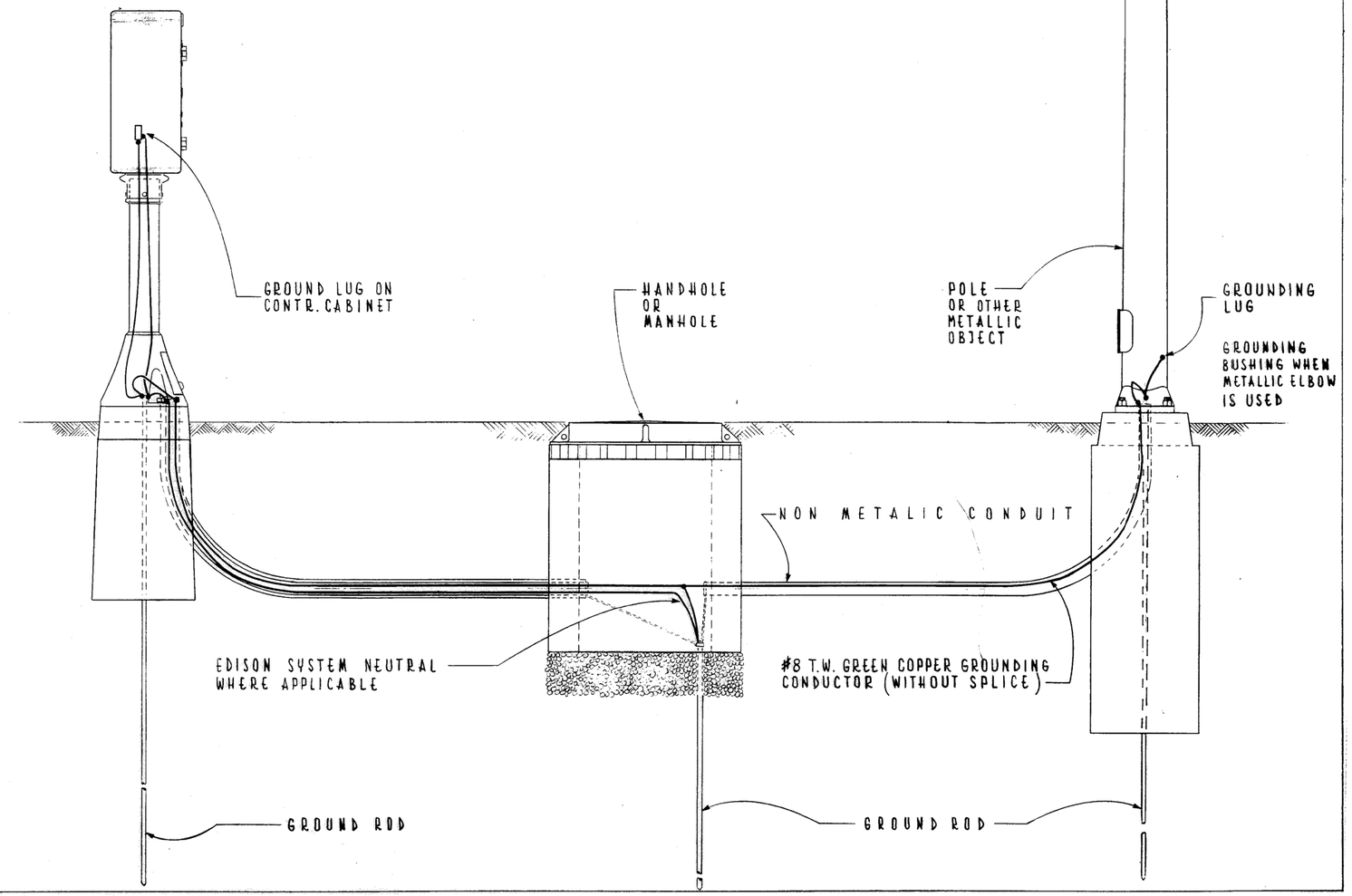

TYPICAL GROUNDING METHODS FOR BUREAU OF ELECTRICITY EQUIPMENT

CITY OF CHICAGO
DEPT. OF STREETS & SANITATION
BUREAU OF ELECTRICITY
DIVISION OF ELEC. ENGINEERING

REVISED	DRAWN: E. GERULIS	CHECKED: M. SHINE	ENGINEER: J. O'CONNOR
ENG. OF ELEC.			
SUPT. OF ELEC.			
DEPUTY COMM.			

SIZE: 8½" x 11" | SCALE: 1" = 1' | DATE: 5-11-72 | DWG. NO. 736

DESIGN BY:										
DRAWN BY:										
CHECKED BY:										
APPROVED BY:		4	7/3/2023	ISSUED FOR BID	BTW	BTW	MJL			
CDOT/APPROVED BY:		NO.	DATE	REVISIONS	DES.	DRW.	CHK.	DCCO	CDOT	

TRANSYSTEMS
222 SOUTH RIVERSIDE PLAZA SUITE 610
CHICAGO, ILLINOIS 60606

SKIDMORE, OWINGS & MERRILL LLP
224 SOUTH MICHIGAN AVENUE, SUITE 1000
CHICAGO, ILLINOIS 60604

CHICAGO DEPARTMENT OF TRANSPORTATION
DIVISION OF ENGINEERING

STATE / LAKE LOOP ELEVATED STATION
200 NORTH STATE STREET, CHICAGO, IL 60601

DEO STANDARD DRAWINGS

CDOT PROJECT D-1-209 | DATE: 7/3/2023

SPEC. NO.

DRAWING NO. CTS-106

REVISION NO.

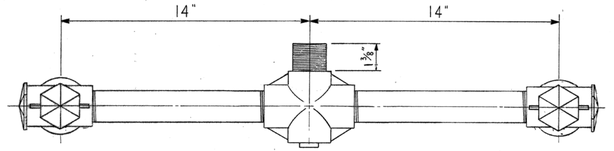

TOP VIEW A-A

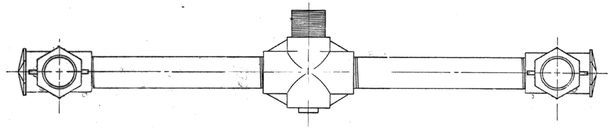

TOP VIEW B-B

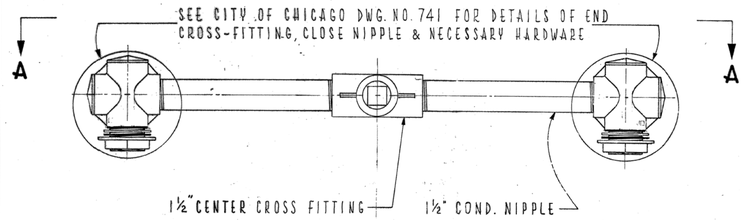

FRONT VIEW

SCALE ⅜" = 1"

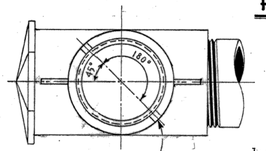

SECTION C-C

SCALE: ⅜" = 1"

¾6" WIDE BY ⅛" DEEP SLOT

TRAFFIC SIGNAL UPPER & LOWER BRACKET ARM ASSEMBLY

CITY OF CHICAGO
DEPT. OF STREETS & SANITATION
BUREAU OF ELECTRICITY
DIVISION OF ELEC. ENGINEERING

REVISED		DRAWN: E. GERULIS	CHECKED: D.C. / M.S.	ENGINEER: L. CUCCI
CHANGE TYPE TA CONDULET TO CENTER CROSS & DELETE CENTER CONDUIT	A 1-23-1981	ENG. OF ELEC.		DWG. NO.
	B	SUPT. OF CONST.		740
	C	DEPUTY COMM.		
	D	SIZE:	SCALE: AS NOTED	DATE: 8-21-74
	E			
	F			

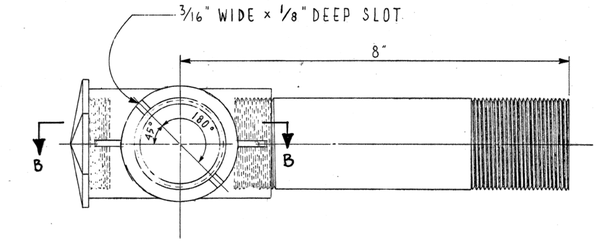

TOP VIEW A-A

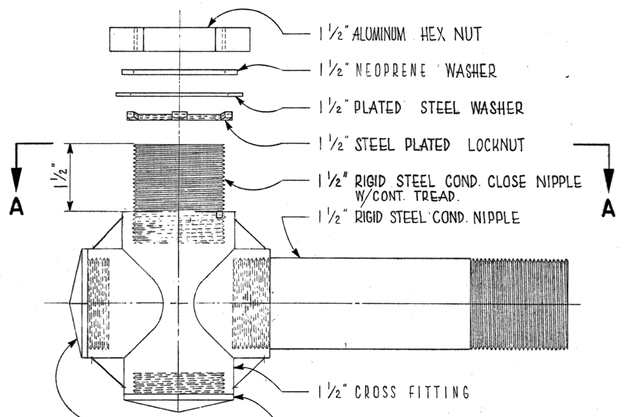

SIDE VIEW

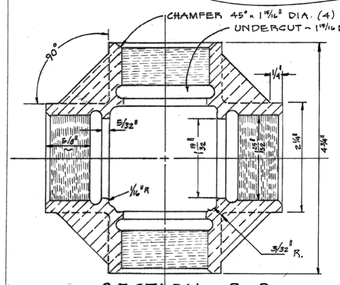

SECTION B-B

TRAFFIC SIGNAL BRACKET ARM ASSEMBLY

CITY OF CHICAGO
DEPT. OF STREETS & SANITATION
BUREAU OF ELECTRICITY
DIVISION OF ELEC. ENGINEERING

REVISED		DRAWN: E. GERULIS	CHECKED: D.C. / M.S.	ENGINEER: L. CUCCI
DELETE SET SCREWS	A 1-23-81	ENG. OF ELEC.		DWG. NO.
ADDED SECTION B-B	B 12-6-84	SUPT. OF CONST.		741
	C	DEPUTY COMM.		
	D	SIZE:	SCALE: ½" = 1"	DATE: 8-21-74
	E			
	F			

DESIGN BY:										
DRAWN BY:										
CHECKED BY:										
APPROVED BY:		4	7/3/2023	ISSUED FOR BID	BTW	BTW	MJL		
CDOT/APPROVED BY:		NO.	DATE	REVISIONS	DES.	DRW.	CHK.	DCCO	CDOT

TranSystems
TRANSYSTEMS
222 SOUTH RIVERSIDE PLAZA SUITE 610
CHICAGO, ILLINOIS 60606

SOM
SKIDMORE, OWINGS & MERRILL LLP
224 SOUTH MICHIGAN AVENUE, SUITE 1000
CHICAGO, ILLINOIS 60604

CDOT
CHICAGO DEPARTMENT OF TRANSPORTATION
DIVISION OF ENGINEERING

STATE / LAKE LOOP ELEVATED STATION
200 NORTH STATE STREET, CHICAGO, IL 60601

DEO STANDARD DRAWINGS

CDOT PROJECT D-1-209

DATE: 7/3/2023

SPEC. NO.

DRAWING NO.
CTS-107

REVISION NO.

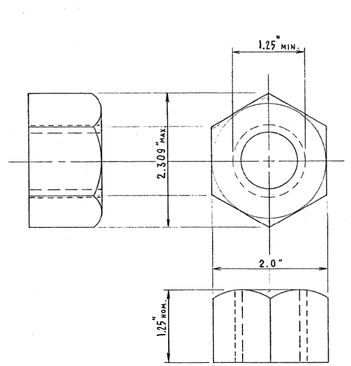

HEXAGON NUT

AMER. NAT'L. STD. HEAVY HEX. FLAT NUT
(ANSI B 18.2.2 – 1972)

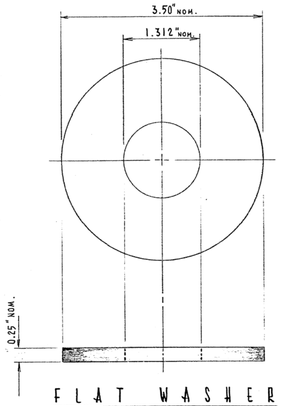

FLAT WASHER

AMER. NAT'L. STD. TYPE "B"
SERIES "W"
(ANSI B 18.22.1-1965, R1975)

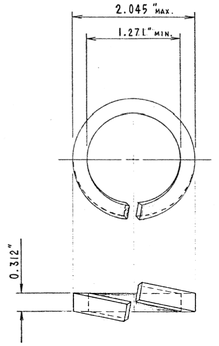

LOCK WASHER

AMER. NAT'L. STD. HELICAL SPRING LOCK WASHER
(ANSI B 18.21.1 - 1972)

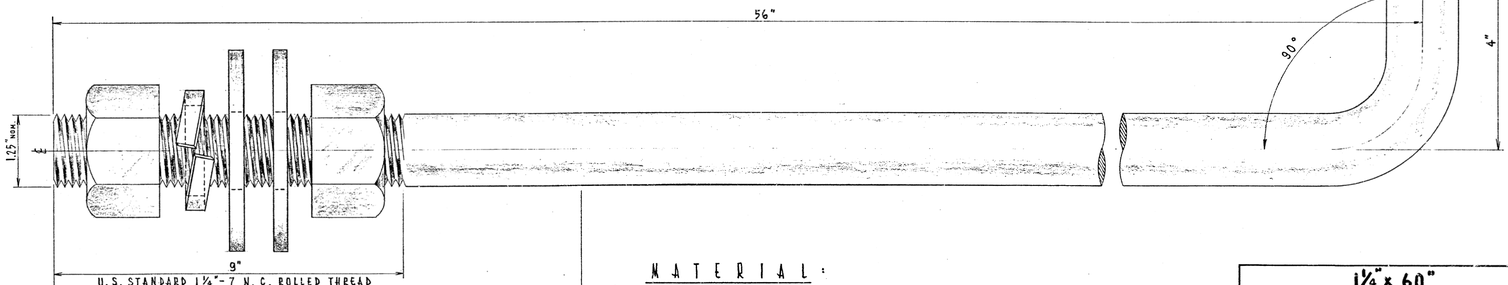

MATERIAL:

ASTM A400, CLASS R-2 MODIFIED STEEL, 55 000 LBS. MINIMUM YIELD.

HARDWARE TO BE FURNISHED & ATTACHED IN PLACE OF ROD FOR SHIPPING:
2 HEX. NUTS, HEAVY, GALV., 1¼".
2 WASHERS, STEEL, ROUND, GALV., TYPE "B", SERIES "W", 1¼".
1 WASHER, LOCK, STEEL, GALV., HELICAL SPRING, REGULAR, 1¼".

BOLT & NUTS SHALL HAVE AN AMERICAN STANDARD CLASS 2 OR 3 FIT. (NUT IS TAPPED OVERSIZE BY 1/32".)

1¼" x 60" STEEL ANCHOR ROD

COMMODITY CODE 37-818A-0236

REVISED		
A	JULY 29, 1982	REDRAWN
B		
C		
D		
E		
F		
G		

CITY OF CHICAGO
DEPT OF STREETS AND SANITATION
BUREAU OF ELECTRICITY
DIVISION OF ELECTRICAL ENGINEERING

DRAWN: EUGENE GERULIS | CHECKED: A. DUKLESKI | ENGINEER: H. SHINE

ELEC. DESIGN ENGINEER: McGuire

ENGINEER OF ELECTRICITY: William Klebl

DEPUTY ADMINISTRATOR: Charles E. Buckley

DRG. NO. 811

SIZE 17" x 28" | SCALE | DATE APR. 3, 1982

DESIGN BY:										
DRAWN BY:										
CHECKED BY:										
APPROVED BY:		4	7/3/2023	ISSUED FOR BID	BTW	BTW	MJL			
CDOT/APPROVED BY:		NO.	DATE	REVISIONS	DES.	DRW.	CHK.	DCCO	CDOT	

TRANSYSTEMS
222 SOUTH RIVERSIDE PLAZA SUITE 610
CHICAGO, ILLINOIS 60606

SKIDMORE, OWINGS & MERRILL LLP
224 SOUTH MICHIGAN AVENUE, SUITE 1000
CHICAGO, ILLINOIS 60604

CHICAGO DEPARTMENT OF TRANSPORTATION
DIVISION OF ENGINEERING

STATE / LAKE LOOP ELEVATED STATION
200 NORTH STATE STREET, CHICAGO, IL 60601

DEO STANDARD DRAWINGS

CDOT PROJECT D-1-209 | DATE: 7/3/2023

SPEC. NO.

DRAWING NO. CTS-108

REVISION NO.

CONDUIT INSTALLATION UNDER PAVED STREET

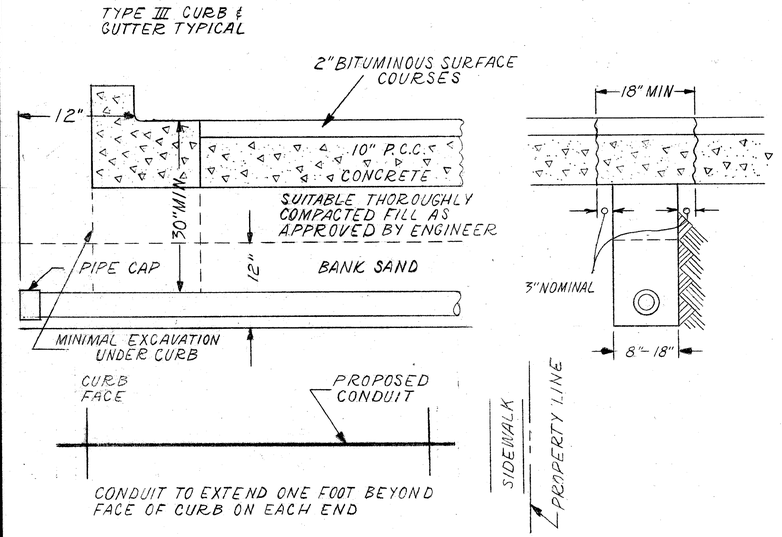

INSTALLATION METHOD OF INSTALLING CONDUIT UNDER PAVED ROADWAY

CITY OF CHICAGO
DEPT. OF STREETS AND SANITATION
BUREAU OF ELECTRICITY
DIVISION OF ELECTRICAL ENGINEERING

DRAWN	CHECKED	ENGINEER
A.M. JOHNSON	R. SYCKOWSKI	R.L. MARTIN

ENGINEER OF ELECTRICITY: Thomas Kilduff

SUPT. OF CONST.: Charles E. Buckley

DEPUTY COMM.

DRG. NO. 813

SIZE 8½"X14" | SCALE N.T.S. | DATE 3-13-81

CONDUIT INSTALLATION THROUGH EXISTING MANHOLE OR HANDHOLE WALL

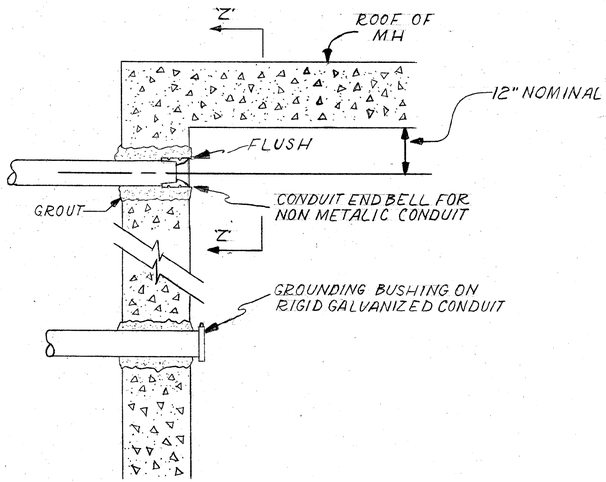

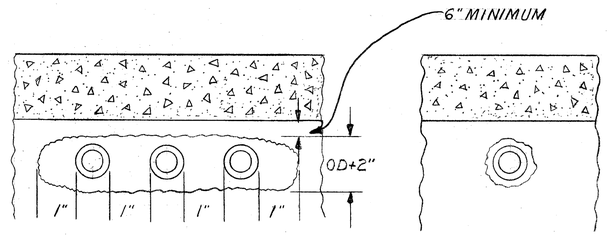

SECTION 'Z'-'Z'

OPENING THROUGH WALL TO BE KEPT TO MINIMUM SIZE TO ADMIT CONDUIT AND SUFFICIENT GROUT TO ASSURE SEALING WALL.

INSTALLATION METHOD OF INSTALLING CONDUIT THRU MANHOLE WALL

CITY OF CHICAGO
DEPT. OF STREETS AND SANITATION
BUREAU OF ELECTRICITY
DIVISION OF ELECTRICAL ENGINEERING

DRAWN	CHECKED	ENGINEER
A.M. JOHNSON	R. SYCKOWSKI	R.L. MARTIN

ENGINEER OF ELECTRICITY: Thomas Kilduff

SUPT. OF CONST.: Charles E. Buckley

DEPUTY COMM.

DRG. NO. 814

SIZE 8½"X14" | SCALE N.T.S. | DATE 3-13-81

DESIGN BY:										
DRAWN BY:										
CHECKED BY:										
APPROVED BY:		4	7/3/2023	ISSUED FOR BID	BTW	BTW	MJL			
CDOT/APPROVED BY:		NO.	DATE	REVISIONS	DES.	DRW.	CHK.	DCCO	CDOT	

TRANSYSTEMS
222 SOUTH RIVERSIDE PLAZA SUITE 610
CHICAGO, ILLINOIS 60606

SKIDMORE, OWINGS & MERRILL LLP
224 SOUTH MICHIGAN AVENUE, SUITE 1000
CHICAGO, ILLINOIS 60604

CHICAGO DEPARTMENT OF TRANSPORTATION
DIVISION OF ENGINEERING

STATE / LAKE LOOP ELEVATED STATION
200 NORTH STATE STREET, CHICAGO, IL 60601

SPEC. NO.

DEO STANDARD DRAWINGS

DRAWING NO. CTS-109

CDOT PROJECT D-1-209 | DATE: 7/3/2023 | REVISION NO.

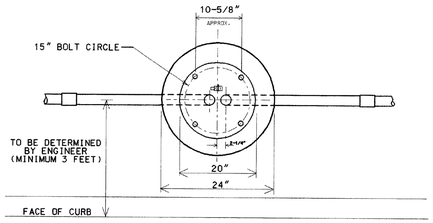

TOP VIEW

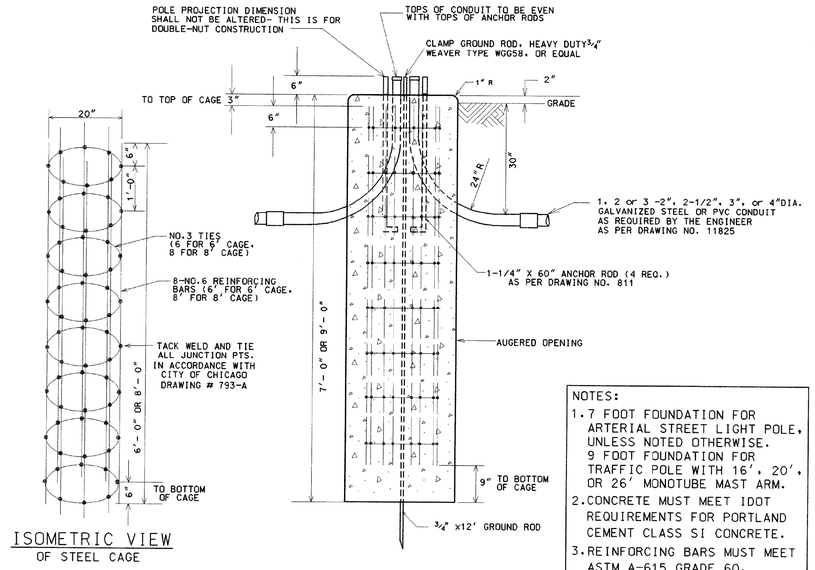

ISOMETRIC VIEW
OF STEEL CAGE

ELEVATION

NOTES:
1. 7 FOOT FOUNDATION FOR ARTERIAL STREET LIGHT POLE, UNLESS NOTED OTHERWISE. 9 FOOT FOUNDATION FOR TRAFFIC POLE WITH 16', 20', OR 26' MONOTUBE MAST ARM.
2. CONCRETE MUST MEET IDOT REQUIREMENTS FOR PORTLAND CEMENT CLASS SI CONCRETE.
3. REINFORCING BARS MUST MEET ASTM A-615 GRADE 60.

NOTE: HOLE FOR FOUNDATION MUST BE AUGURED IN UNDISTURBED SOIL

CODE	COMMODITY	SIZE	QUANTITY
05-3267-2940	REDI-MIX CONCRETE	CU. YD.	0.82 OR 1.05
09-4001-	ELBOW, LARGE RADIUS	2",2-1/2",3",4"	VARIES
37-8180-0200	ANCHOR ROD	1-1/4" X 60"	4
05-5054-6910	RE-BAR CAGE	20"Ø X 6'(or 8')	1
09-7796-9200	GROUND ROD	3/4" X 12'-0"	1
09-2636-3240	GROUND ROD CLAMP	3/4 "	1
09-2092-	GROUND BUSHING	2",2-1/2",3" OR 4"	VARIES

DATE	REVISION
8/21/02	SUPERCEDES DWG #818 DRAWN 4/21/81

FOUNDATION FOR 34'-6" ARTERIAL STREET LIGHT OR TRAFFIC SIGNAL POLE - 3 OR 7 GAUGE WITH 15" BOLT CIRCLE

CITY OF CHICAGO
DEPT. OF STREETS AND SANITATION
BUREAU OF ELECTRICITY
DIVISION OF ELECTRICAL ENGINEERING

DRAFTSMAN:	CHIEF DRAFTSMAN:	ENGINEER:
B. GARNSEY	R. CARTER	B. GARNSEY

ELECTRICAL DESIGN ENGINEER
ENGINEER OF ELECTRICITY
GENERAL SUPERINTENDENT
DEPUTY COMMISSIONER

DRAWING NO. 818

SIZE: 11" x 17" | SCALE: NONE | DATE: 8/21/02

DESIGN BY:										
DRAWN BY:										
CHECKED BY:										
APPROVED BY:		4	7/3/2023	ISSUED FOR BID	BTW	BTW	MJL		
CDOT/APPROVED BY:		NO.	DATE	REVISIONS	DES.	DRW.	CHK.	DCCO	CDOT

TranSystems
TRANSYSTEMS
222 SOUTH RIVERSIDE PLAZA SUITE 610
CHICAGO, ILLINOIS 60606

SOM
SKIDMORE, OWINGS & MERRILL LLP
224 SOUTH MICHIGAN AVENUE, SUITE 1000
CHICAGO, ILLINOIS 60604

CDOT
CHICAGO DEPARTMENT OF TRANSPORTATION
DIVISION OF ENGINEERING

STATE / LAKE LOOP ELEVATED STATION
200 NORTH STATE STREET, CHICAGO, IL 60601

DEO STANDARD DRAWINGS

CDOT PROJECT D-1-209 | DATE: 7/3/2023

SPEC. NO.

DRAWING NO. CTS-110

REVISION NO.

PROPOSED	PRESENT	
⊶	⊷	SIGNAL, TRAFFIC 3 SECTION 1–WAY ADJUSTABLE, 12" OR AS NOTED
⊶⊷	⊷⊶	SIGNAL, TRAFFIC 3 SECTION 2–WAY ADJUSTABLE, 12" OR AS NOTED
*	*	SIGNAL OPTICALLY PROGRAMMED
DW	DW	SIGNAL, PEDESTRIAN, COUNTDOWN
DW	DW	SIGNAL, PEDESTRIAN, DON'T WALK/WALK
→	→	SIGNAL FACE ARROW, 12" COLOR AS NOTED
	Y G	SIGNAL FACE, 1 SECTION YELLOW/GREEN ARROW DUAL INDICATION
◎	⊙	PUSH BUTTON, PEDESTRIAN
P N Y P	P N Y P	SIGN,ILLUMINATED, WITH MESSAGE OR SYMBOL AS INDICATED
		MAST ARM, MONOTUBE, STEEL. SIZE AS INDICATED (SEE DWG. #870)
		MAST ARM, TRUSS, ALUMINUM. SIZE AS INDICATED
		CONTROLLER, TRAFFIC SIGNAL. PEDESTAL OR BASE MOUNTED AS INDICATED
⊠	⊠	CONTROLLER, STREET LIGHTING. PEDESTAL OR BASE MOUNTED. (DWG. 876 or 880)
		CONTROLLER,STREET LIGHTING. POLE MOUNTED (DWG. #11940)
	⊠	POLE, WOOD. COMMONWEALTH EDISON COMPANY, SERVICE
		POLE, CITY STEEL, ANCHOR BASE, 34'6",7 GA. 10" DI A. AND 15"B.C. 24"X7' FND. W/1 ¼" ANCHOR RODS DRG. #818.
		POLE, CITY STEEL, ANCHOR BASE, 34'–6", 3 GA. 10" DIA. AND 15" B.C. 24"X9' FND. W/1 ¼" ANCHOR RODS DRG. #818 (16',20'or 26'M.A.)
		POLE, CITY STEEL, ANCHOR BASE, 34"–6", 3GA., 11" DIA. AND 17 ¼" B.C. 30"X9' FND. W/1 ¼" ANCHOR RODS DRG. #816. (30' M.A.)
		POLE, CITY STEEL, ANCHOR BASE 34'–6", 3 GA. 12 ½" DIA. AND 16 ½"B.C. 30"X11' FND. W/1 ½" ANCHOR RODS DRG.#817. (35',40'or 44' M.A.)
		POLE, CITY STEEL, ANCHOR BASE, 32'–6", 3 GA. 10" DIA., WITH 3 GA. BAL. HSG. BASE AND 17 ¼" B. C. ON 30"X9' FND. W/ 11/4" ANCHOR RODS DRG. #816.
		POLE, CITY STEEL, ANCHOR BASE, 20',27'–6",29'–6", 7 GA. WITH STEEL BAL. HSG. BASE AND FND. W/10" D. B.C. AND 1" ANCHOR RODS DRG. #716.
		POLE,CITY STEEL, ANCHOR BASE, 20',27'–6",29'–6", 3 GA., WITH STEEL BAL. HSG. BASE AND FND. W/10" D. B.C. AND 1" ANCHOR RODS DWG.#719.
		POLE, CITY STEEL, ANCHOR BASE, 20',27'–6", 29'–6" 7 GA., AND ALUMINUM RESIDENTIAL DAVIT,AND FND. WITH 10" B.C. AND 1" ANCHOR RODSDWG#565 (CONCRETE) OR DWG.#936 (HELIX).
		POLE, CITY STEEL, ANCHOR BASE, 20',27'–6",29'–6" 3 GA.,AND FND. WITH 10" B.C. AND 1" ANCHOR RODS DWG. #565 (CONCRETE) OR DWG.#936 (HELIX).
		POLE , CITY STEEL, ANCHOR BASE, 32'–6", 7 GA., AND FND. WITH 11½" B.C. AND 1" ANCHOR RODS DWG. #753.
		POLE, CITY STEEL, ANCHR BASE, 32'–6", 3 GA., AND FND. WITH 11½" B.C. AND 1" ANCHOR RODS DWG. #753.
		POLE, CITY STEEL, ANCHOR BASE, 32'–6" 7 GA., ALUM. BHB AND FND. WITH 15" B.C.–24"X7' WITH 1" ANCHOR RODS DRG. #691.
		POLE, CITY STEEL, ANCHOR BASE, 32'–6", 3 GA., ALUM. BHB AND FND. WITH 15" B.C. 24"X 7' WITH 1" ANCHOR RODS DWG. #691.
		POLE, CITY ALUMINUM, WITH ROUND BAL. HSG. BASE, 25', 28', or 30' ON FND.WITH 14" B.C., ACQUIRED FROM CHICAGO PARK DISTRICT.
		POLE, CITY STEEL, EMBEDDED, 4"X 9"X 35' 7 GA., TAPERED TUBULAR. (DWG. #658)
		POLE, CITY STEEL, EMBEDDED, 4"X 9"X 35' 3 GA., TAPERED TUBULAR. (DWG. #658)
		POLE, CITY STEEL, EMBEDDED. (ACQUIRED FROM CTA)
		COLUMN,ELEVATED STRUCTURE
		POLE, WOOD. (SIZE AS NOTED)
		POLE, FOUNDATION WITH ELBOWS AS INDICATED.(SIZE AS NOTED)
		POLE, ORNAMENTAL OR OTHER, AS INDICATED ON THE PLANS
		RESIDENTIAL STREET LIGHTING CONTROLLER

PROPOSED	PRESENT	
		MANHOLE, 3'X4'X4' 24" F & C (DWG.#730) (A) 30" F & C (DWG#729) (B)
		MANHOLE, 4'X6'X6' 24" F & C (DWG.#732) (C) 30" F & C (DWG#733) (D)
		HANDHOLE, HEAVY DUTY, 36" I.D. (DWG.#866) 24" F & C (E). (DWG#871) 30" F & C (F)
		HANDHOLE, CIRCULAR WITH 24"FRAME & COVER,30"I.D. (#867) (G)
		FOUNDATION, CONTROLLER OR PEDESTAL, 13" B.C.,20"X5' (DWG. #709)
		FOUNDATION, TRAFFIC CONTROLLER DWG. #854. F.A. TERMINAL FND. DWG. #11972
P	P	FOUNDATION, TRAFFIC TYPE "P", BASE MOUNT. (DWG. #888)
		FOUNDATION,CONTROLLER STREET LIGHT ,SPECIAL, 100A & 200A. (DWG.#876 & # 880)
		FOUNDATION, TRANSCLOSURE; TRANSCLOSURE HOUSING. (DWG.# 583 & #891)
		CONTROLLER,UNDERPASS LIGHTING 120V. & 240V. (DWG. #860 & #861)
	E	MANHOLE, UTILITY, E=COMMONWEALTH EDISON; T=ILL.BELL TEL.; G=PEOPLES GAS; W=CITY WATER; P=CHGO PARK DISTRICT; CTA=C.T.A; S= SEWER
J		JUNCTION BOX, IN PAVEMENT (DWG. #815)
		DETECTOR LOOP IN PAVEMENT
		CONDUIT or P.V.C., NUMBER,SIZE & TYPE. (AS NOTED)
2D	2D	CONDUIT or P.V.C. ENCASED IN CONCRETE. (SECTION or NUMBER OF CONDUIT INDICATED
		LUMINAIRE, H.P.S.V. 400W LAMP, 240V, SEMI–CUTOFF
		LUMINAIRE, H.P.S.V. 400W LAMP, 240V, CUTOFF
		LUMINAIRE, H.P.S.V. 310W LAMP, 240V
		LUMINAIRE, H.P.S.V. 310W LAMP 240V, CUTOFF
		LUMINAIRE, H.P.S.V. 150W LAMP, 240V
		LUMINAIRE, H.P.S.V. 150W LAMP, 120V
		LUMINAIRE, H.P.S.V. 250W LAMP, 120V, (ALLEY LIGHT)
		LUMINAIRE, H.P.S.V. 250W LAMP, 120V
		LUMINAIRE, H.P.S.V. 400W LAMP, 240V, (FLOOD LIGHT)
T	T	TERMINAL, CABINET F.A. & P.C.
F	F	FIRE ALARM BOX, MOUNTED
F	F	FIRE ALARM BOX, POLE MOUNTED
PR.	PR	CABLE, TRAFFIC SIGNAL, COMMUNICATION, 1–PAIR #14 SHIELDED, IN CONDUIT
2	2	CABLE, TRAFFIC SIGNAL POWER SUPPLY, 2/C– #4, 600 V. EPR. IN CONDUIT
III	III	CABLE, TRAFFIC SIGNAL POWER SUPPLY, 2 1/C–#2 or #1/0 600V. EPR IN CONDUIT
II	II	CABLE, TRAFFIC SIGNAL POWER SUPPLY, 2/C–#10 or #6, 600V NSRI, IN CONDUIT
VII	VII	CABLE, TRAFFIC SIGNAL, 7/C–#12 or #14, 600V, EPR IN CONDUIT
X	X	CABLE, TRAFFIC SIGNAL, 10/C–#12 600V. EPR IN CONDUIT
	XIV	CABLE, TRAFFIC SIGNAL, 14/C–#14, 600V. EPR IN CONDUIT
XIX	XIX	CABLE, TRAFFIC SIGNAL, 19/C–#12 600V, EPR IN CONDUIT
2N	2N	CABLE, STREET LIGHT, 2 1/C–#6, 600V. RINS IN PARKWAY
2NC	2NC	CABLE, STREET LIGHT, 2 1/C–#6, 600V. RINS IN CONDUIT
3TC	3TC	CABLE, STREET LIGHT, 2 1/C–#6 EPRN 600V. & 1 1/C–#8 GREEN, TRIPLEXED,IN CONDUIT
3NC	3NC	CABLE, STREET LIGHT, 3 1/C–#1/0, or #2/0, or #4, 600V. EPR IN CONDUIT
2W	2W	WIRE, STREET LIGHT, 2 1/C–#6, HDNS. AERIAL
3W	3W	WIRE, STREET LIGHT, 2 1/C–#6 & 1 1/C #8, HDNS. AERIAL
III	III	CABLE, STREET LIGHT AERIAL, 3 1/C–#4 or #2 SELF SUPPORTING, 600V EPR
W FA	W FA	WIRE, F.A. & P.C. AERIAL, 1/C–#10, NUMERAL DENOTES QUANTITY
PR	PR	CABLE, F.A. & P.C. AERIAL, W/ MESSENGER #19–(NUMBER OF PAIRS AS INDICATED)
6 PR	6 PR	CABLE, F.A. & P.C. AERIAL, SELF SUPPORTING, #19–(NUMBER OF PAIRS AS INDICATED)
37 PR.	37 PR	CABLE, F.A. & P.C., IN CONDUIT, #19–(NUMBER OF PAIRS AS INDICATED)
		DOWNLIGHT ASSEMBLY. (DWG. #850)
		LIGHT, TRAFFIC SAFETY ISLAND
		FLASHING BEACON & DOWNLIGHT

C.M.H. LUMINAIRES

PROPOSED	PRESENT	
		LUMINAIRE, C.M.H. 315W LAMP, 240V
		LUMINAIRE, C.M.H. 315W LAMP, 240V, (FLOOD)
		LUMINAIRE, C.M.H. 210W LAMP, 240V
		LUMINAIRE, C.M.H. 140W LAMP, 240V
		LUMINAIRE, C.M.H. 140W LAMP, 120V, (ALLEY)
		LUMINAIRE, C.M.H. 90W LAMP, 240V
		LUMINAIRE, C.M.H. 90W LAMP, 240V (ACORN)
		LUMINAIRE, C.M.H. 60W LAMP, 240V (ACORN)

H.P.S.V. ORNAMENTAL LUMINAIRES

PROPOSED	PRESENT	
		310W PENDANT (240V)
		400W PENDANT (240V)
		250W PENDANT (240V)
		150W ACORN (120V)
		150W ACORN (240V)
		50W ACORN (240V)
		100W ACORN (240V)
		150W GLOBE (240V)
		100W GLOBE (240V)
		50W GLOBE (240V)

L.E.D. LUMINAIRES

PROPOSED	PRESENT	
		(400W HPSV EQUIVALENT), 240V
		(100W HPSV EQUIVALENT), 240V, ACORN
		(310W HPSV EQUIVALENT), 240V
		(100/150W HPSV EQUIVALENT), 240V ACORN
		(250W HPSV EQUIVALENT), 240V
		(50W HPSV EQUIVALENT), 240V, ACORN

F	01–08–14	ADDED LED LUMINAIRES A.VIEU
E	09–19–13	ADDED CMH LUMINAIRES A.VIEU
D	02–06–04	REVISED/REDRAW R.POOL/B.I.
C	04–01–02	REVISED/REDRAW R.POOL/B.I.
B	12–4–01	ADDED ORNAMENTAL SYMBOLS
A	8–6–96	REDRAWN
DATE		REVISION

SUPERSEDES DWG. #

WORK ORDER NO. _____ DATE _____

COST ALLOCATION ACCOUNT _____

APPROPRIATION ACCOUNT { MATERIAL _____ / LABOR _____

STANDARD CODE FOR TRAFFIC SIGNALS/ STREET LIGHTING

CITY OF CHICAGO
DEPT. OF TRANSPORTATION
DIVISION OF ENGINEERING
ELECTRICAL SECTION

DRAFTSMAN:	CHIEF DRAFTSMAN:	ENGINEER:
R, IVY	R. CARTER	R. POOL/R.C/W.T.

SUPERVISING ENGINEER: ELEC. DESIGN ENGR.

ENGINEER OF ELECTRICITY:

GEN'L SUPT. OF CONSTRUCTION:

DEPUTY COMMISSIONER:

DWG. NO. 826

SIZE: 22" | 36" SCALE: NONE DATE: 09–19–13

DESIGN BY:										
DRAWN BY:										
CHECKED BY:										
APPROVED BY:		4	7/3/2023	ISSUED FOR BID	BTW	BTW	MJL			
CDOT/APPROVED BY:		NO.	DATE	REVISIONS	DES.	DRW.	CHK.	DCCO	CDOT	

TranSystems
TRANSYSTEMS
222 SOUTH RIVERSIDE PLAZA SUITE 610
CHICAGO, ILLINOIS 60606

SOM
SKIDMORE, OWINGS & MERRILL LLP
224 SOUTH MICHIGAN AVENUE, SUITE 1000
CHICAGO, ILLINOIS 60604

CDOT
CHICAGO DEPARTMENT OF TRANSPORTATION
DIVISION OF ENGINEERING

STATE / LAKE LOOP ELEVATED STATION
200 NORTH STATE STREET, CHICAGO, IL 60601

SPEC. NO.

DEO STANDARD DRAWINGS

DRAWING NO. CTS-111

CDOT PROJECT D-1-209 | DATE: 7/3/2023 | REVISION NO.

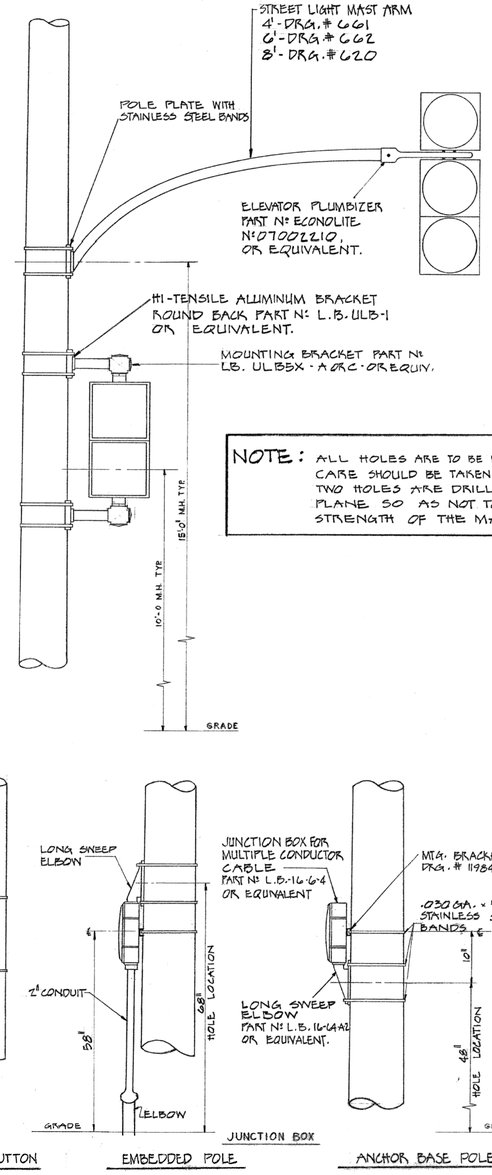

NOTE: ALL HOLES ARE TO BE DRILLED IN POLES OR POSTS. CARE SHOULD BE TAKEN TO SEE THAT NO MORE THAN TWO HOLES ARE DRILLED IN THE SAME HORIZONTAL PLANE SO AS NOT TO WEAKEN THE OVERALL STRENGTH OF THE MATERIAL.

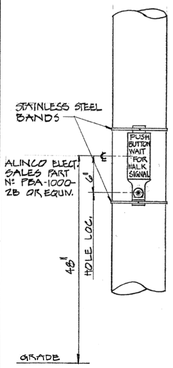

PEDESTRIAN PUSH BUTTON

EMBEDDED POLE

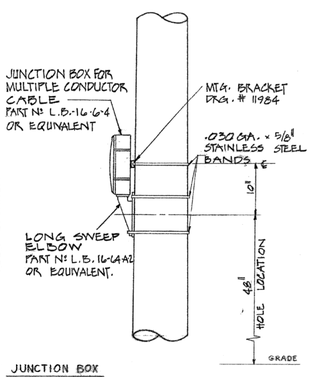

ANCHOR BASE POLE

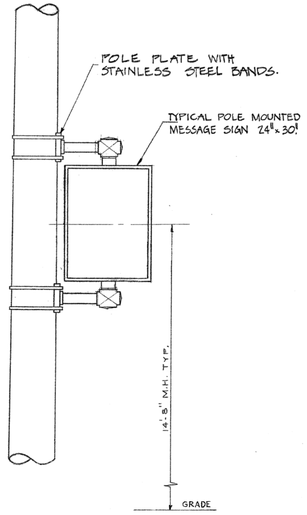

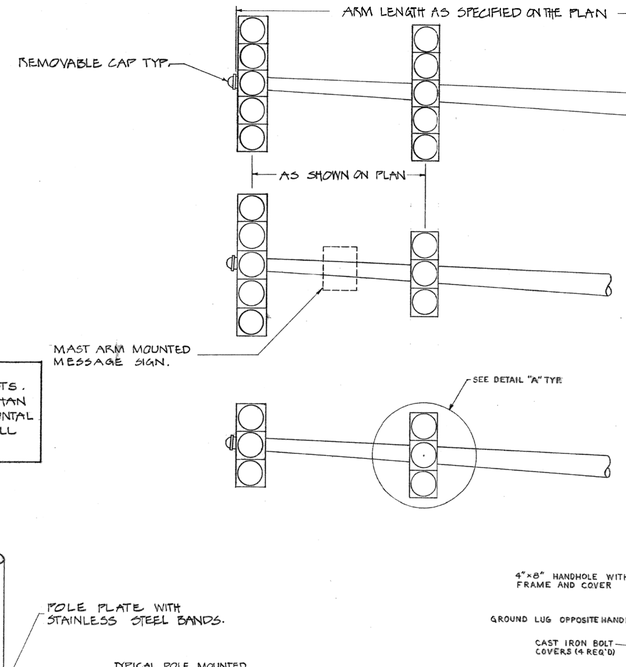

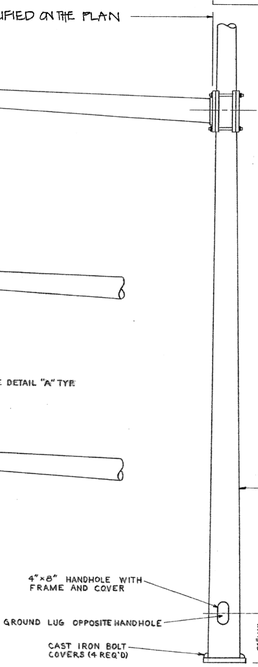

NOTE: OVERHEAD SIGNALS SHALL HAVE A MINIMUM CLEARANCE OF 15'-0" ABOVE PAVEMENT GRADE.

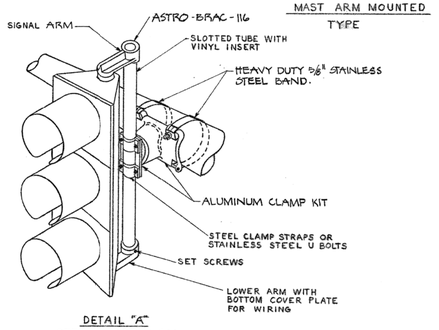

DETAIL "A"
STEEL MAST ARM MOUNTING DETAIL

NOTE: FOR OPTICALLY PROGRAMMED SIGNAL LONGER SIGNAL ARMS REQUIRED. (ASTRO-BRAC AB-103)

APPROVED AS WORKING PLAN
BY
REVISIONS OF WORKING PLAN

FEDERAL-AID ROUTE NO.	SECTION	COUNTY	TOTAL SHEETS	SHEET NO.
FHWA REG. NO.	ILLINOIS PROJECT			

DATE	REVISION
A	

WORK ORDER NO. _____ DATE _____
COST ALLOCATION ACCOUNT _____
APPROPRIATION ACCOUNT { MATERIAL _____ LABOR _____

TYPICAL TRAFFIC SIGNAL MOUNTING DETAILS

CITY OF CHICAGO
DEPT. OF STREETS AND SANITATION
BUREAU OF ELECTRICITY
DIVISION OF ELECTRICAL ENGINEERING

DRAFTSMAN: K. Fuge/DL	CHIEF DRAFTSMAN: RJS	ENGINEER: M. DEBARTOLO
SUPERVISING ENGINEER:	ELECT. DESIGN ENGR.: R. D. Martin	DWG. NO. 834
ENGINEER OF ELECTRICITY: Michael J. Sheehan		
GENL. SUPT. OF ELECTRICITY: Dustin M. Lee		
DEPUTY COMMISSIONER: Ronald J. Gaylord		
SIZE:	SCALE: N.T.S.	DATE: 12-10-84

DESIGN BY:										
DRAWN BY:										
CHECKED BY:										
APPROVED BY:		4	7/3/2023	ISSUED FOR BID	BTW	BTW	MJL			
CDOT/APPROVED BY:		NO.	DATE	REVISIONS	DES.	DRW.	CHK.	DCCO	CDOT	

TranSystems
TRANSYSTEMS
222 SOUTH RIVERSIDE PLAZA SUITE 610
CHICAGO, ILLINOIS 60606

SOM
SKIDMORE, OWINGS & MERRILL LLP
224 SOUTH MICHIGAN AVENUE, SUITE 1000
CHICAGO, ILLINOIS 60604

CDOT
CHICAGO DEPARTMENT OF TRANSPORTATION
DIVISION OF ENGINEERING

STATE / LAKE LOOP ELEVATED STATION
200 NORTH STATE STREET, CHICAGO, IL 60601

DEO STANDARD DRAWINGS

CDOT PROJECT D-1-209 | DATE: 7/3/2023

SPEC. NO.

DRAWING NO. CTS-112

REVISION NO.

APPROVED AS WORKING PLAN
BY
REVISIONS OF WORKING PLAN

FEDERAL-AID ROUTE NO.	SECTION	COUNTY	TOTAL SHEETS	SHEET NO.
FHWA REG. NO.	ILLINOIS	PROJECT		

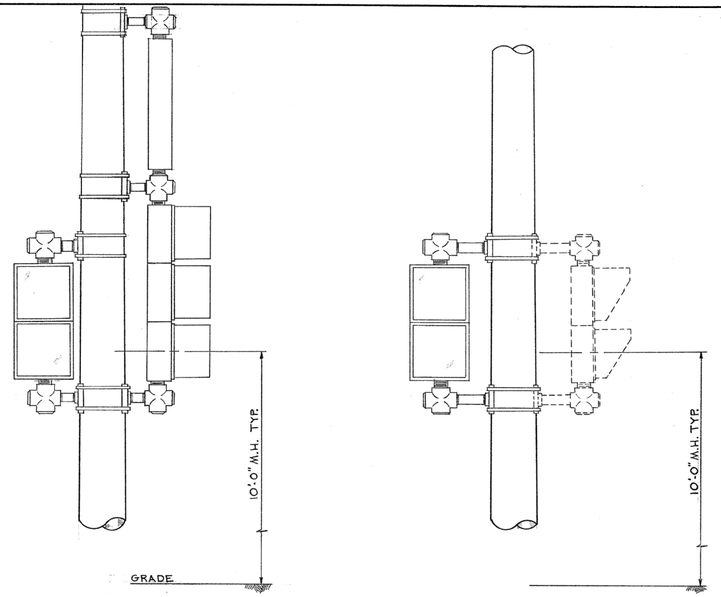

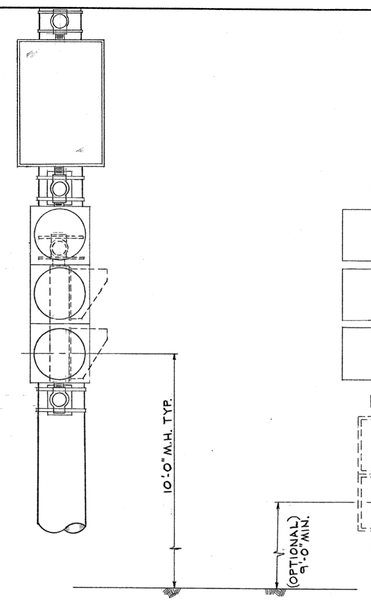

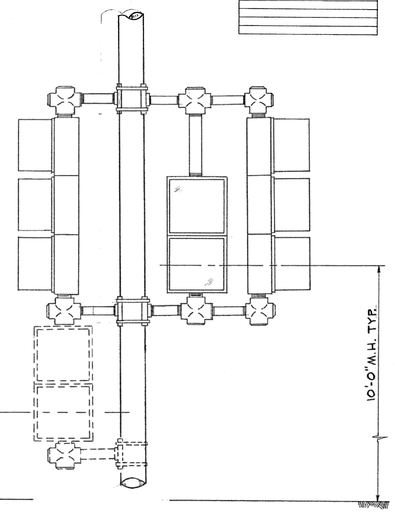

NOTE:
OTHER METHODS OF ATTACHING HARDWARE FOR SIGNAL HEADS MAY BE USED UPON APPROVAL OF THE BUREAU OF ELECTRICITY.

SIGNALS MUST BE INSTALLED WITH ADEQUATE CLEARANCE FOR RELAMPING WITHOUT REMOVING VISOR OR ROTATING SIGNAL.

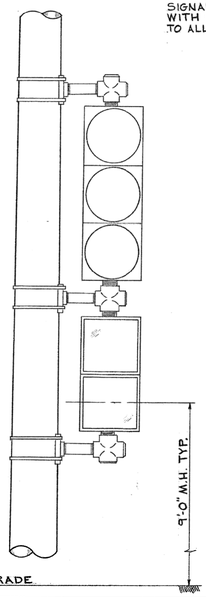

OPTICALLY PROGRAMMED SIGNALS MUST BE INSTALLED WITH SUFFICIENT CLEARANCE TO ALLOW FOR PROGAMMING.

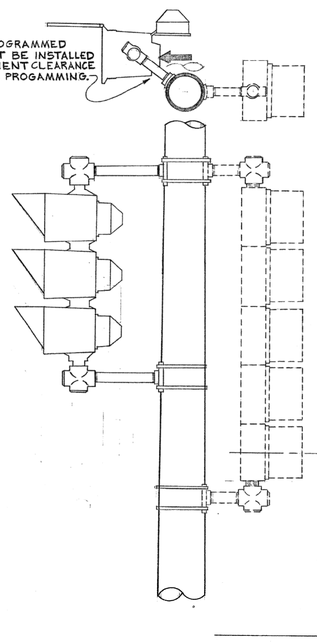

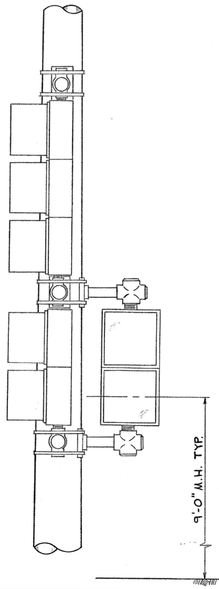

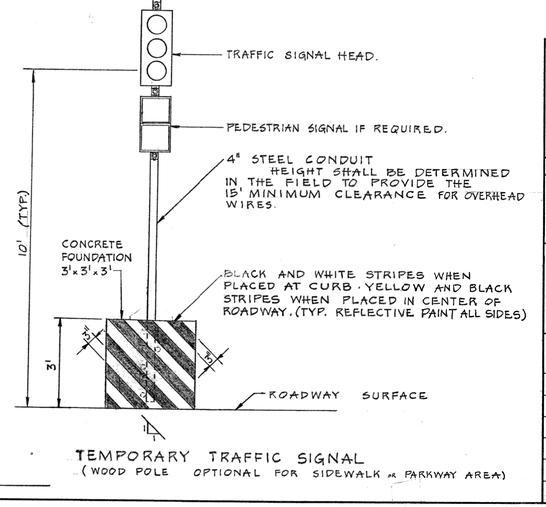

TEMPORARY TRAFFIC SIGNAL
(WOOD POLE OPTIONAL FOR SIDEWALK OR PARKWAY AREA)

DATE	REVISION
A 3-5-93	ADDED TEMP. SIGNAL DETAIL

WORK ORDER NO. _____ DATE _____
COST ALLOCATION ACCOUNT
APPROPRIATION ACCOUNT { MATERIAL _____ LABOR _____

TYPICAL TRAFFIC SIGNAL MOUNTING DETAILS

CITY OF CHICAGO
DEPT. OF STREETS AND SANITATION
BUREAU OF ELECTRICITY
DIVISION OF ELECTRICAL ENGINEERING

DRAFTSMAN: W. TROMPKA	CHIEF DRAFTSMAN: R.J.S.	ENGINEER: M. DeBARTOLO
SUPERVISING ENGINEER:	ELECT. DESIGN ENGR.: R. Martin	DWG. NO. 835
ENGINEER OF ELECTRICITY: Michael J. Shine		
GEN. SUPT. OF ELECTRICITY:		
DEPUTY COMMISSIONER:		
SIZE: 22 | 36	SCALE: NONE	DATE: 12-10-84

DESIGN BY:										
DRAWN BY:										
CHECKED BY:										
APPROVED BY:		4	7/3/2023	ISSUED FOR BID	BTW	BTW	MJL			
CDOT/APPROVED BY:		NO.	DATE	REVISIONS	DES.	DRW.	CHK.	DCCO	CDOT	

TranSystems
TRANSYSTEMS
222 SOUTH RIVERSIDE PLAZA SUITE 610
CHICAGO, ILLINOIS 60606

SOM
SKIDMORE, OWINGS & MERRILL LLP
224 SOUTH MICHIGAN AVENUE, SUITE 1000
CHICAGO, ILLINOIS 60604

CDOT
CHICAGO DEPARTMENT OF TRANSPORTATION
DIVISION OF ENGINEERING

STATE / LAKE LOOP ELEVATED STATION
200 NORTH STATE STREET, CHICAGO, IL 60601

SPEC. NO.

DEO STANDARD DRAWINGS

DRAWING NO. CTS-113

CDOT PROJECT D-1-209 | DATE: 7/3/2023 | REVISION NO.

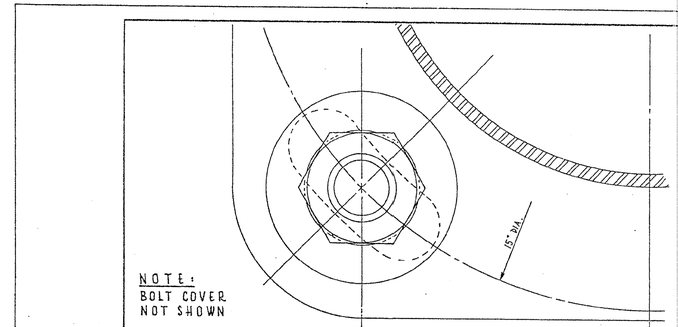

NOTE:
BOLT COVER
NOT SHOWN

INSTALLATION NOTES

STEP 1 COAT EXPOSED PORTION OF ANCHOR BOLTS WITH APPROVED ANTI RUSTING GREASE ("NO-OX" OR EQUAL).

STEP 2 INSTALL LOWER LEVELLING NUTS & WASHERS. SET AT PROPER GRADE WITH HAND LEVEL, USE TABLE FOR APPROPRIATE DIMENSIONS.

STEP 3 MOUNT POLE OR PEDESTAL, ATTACH TOP WASHERS & NUTS HAND TIGHT.

STEP 4 PLUMB POLE OR PEDESTAL AFTER ALL MASTARMS, STREET LIGHTS, TRAFFIC SIGNALS & OTHER APPURTENANCES ARE ATTACHED TO POLE & TIGHTEN ALL NUTS.

STEP 5 ATTACH NUT COVERS WHERE REQUIRED.

STEP 6 DO NOT GROUT IN SPACE BETWEEN BOTTOM OF POLE & TOP OF FOUNDATION. TOP OF FOUNDATION OR SURFACE OF SIDEWALK MUST BE LEFT CLEAN AND SMOOTH.

STEP 7 POLE OR PEDESTAL IS TO BE PERFECTLY PLUMB, NO "RAKE" IS TO BE LEFT.

IF NECESSARY:
ANCHOR BOLT TO BE TRIMMED WITH SAW. DO NOT BURN, AS THIS DRASTICALLY REDUCES THE TENSILE STRENGTH OF ANCHOR BOLT.

COAT ANCHOR BOLT WITH RUST-OLEUM HARD HAT ZINC RICH COMPOUND.

TABLE

UNIT	ANCHOR BOLT SIZE						
	1"		1 ¼"		1 ½"		¾"
	POLE GAUGES						ALUM. PED.
	7 GA.	3 GA.	7 GA.	3 GA.	7 GA.	3 GA.	
A	7/16"	7/16"	1 1/8"	1 5/16"	1 1/8"	7/8"	¾"
B	1"	1"	1¼"	1¼"	1½"	1½"	¾"
C	¼"	¼"	5/16"	5/16"	3/8"	3/8"	3/16"
D	5/32"	5/32"	¼"	¼"	¼"	¼"	5/32"
E	1"	1"	1¼"	1½"	1½"	1¾"	5/8"

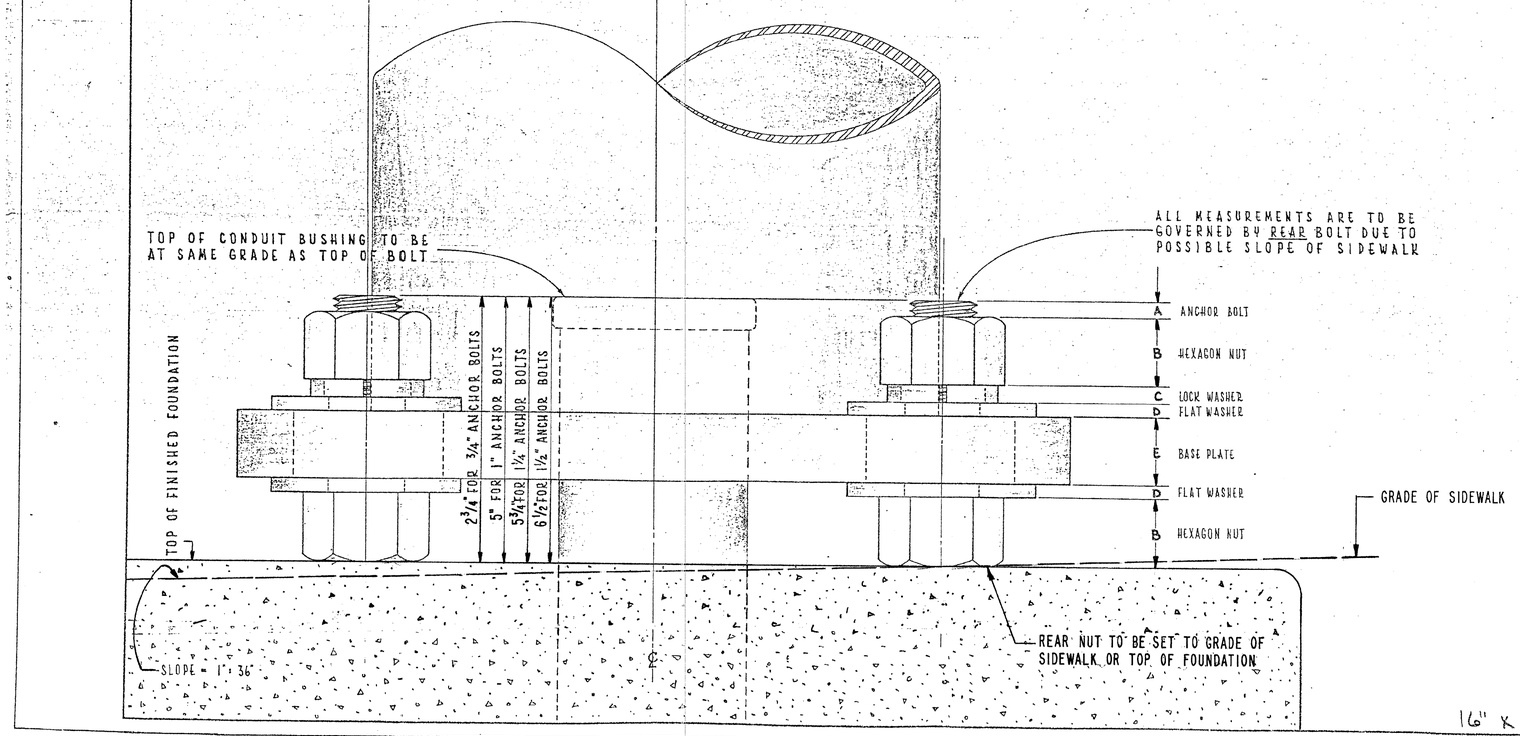

16" x 21"

CONSTRUCTION METHOD FOR "DOUBLE-NUT" INSTALLATION OF POLES AND PEDESTALS

CITY OF CHICAGO
DEPT. OF STREETS AND SANITATION
BUREAU OF ELECTRICITY
DIVISION OF ELECTRICAL ENGINEERING

DRAFTSMAN: EUGENE GERULIS	CHIEF DRAFTSMAN: R.J.S.	ENGINEER: M.J.S.
SUPERVISING ENGINEER:	ELEC. DESIGN ENGR.	I.W.C. NO. 837
ENGINEER OF ELECTRICITY: Michael A. Shiner, GEN'L. SUPT. OF ELECTRICITY		
DEPUTY COMMISSIONER: Ronald M. Hunyadi		
SIZE: 22 | 34	SCALE: 1" = 1"	DATE: 6-7-85

DESIGN BY:										
DRAWN BY:										
CHECKED BY:										
APPROVED BY:		4	7/3/2023	ISSUED FOR BID	BTW	BTW	MJL			
CDOT/APPROVED BY:		NO.	DATE	REVISIONS	DES.	DRW.	CHK.	DCCO	CDOT	

TranSystems
TRANSYSTEMS
222 SOUTH RIVERSIDE PLAZA SUITE 610
CHICAGO, ILLINOIS 60606

SOM
SKIDMORE, OWINGS & MERRILL LLP
224 SOUTH MICHIGAN AVENUE, SUITE 1000
CHICAGO, ILLINOIS 60604

CDOT
CHICAGO DEPARTMENT OF TRANSPORTATION
DIVISION OF ENGINEERING

STATE / LAKE LOOP ELEVATED STATION
200 NORTH STATE STREET, CHICAGO, IL 60601

DEO STANDARD DRAWINGS

CDOT PROJECT D-1-209

DATE: 7/3/2023

SPEC. NO.

DRAWING NO. CTS-114

REVISION NO.

PLAN

FRAME & COVER REMOVED

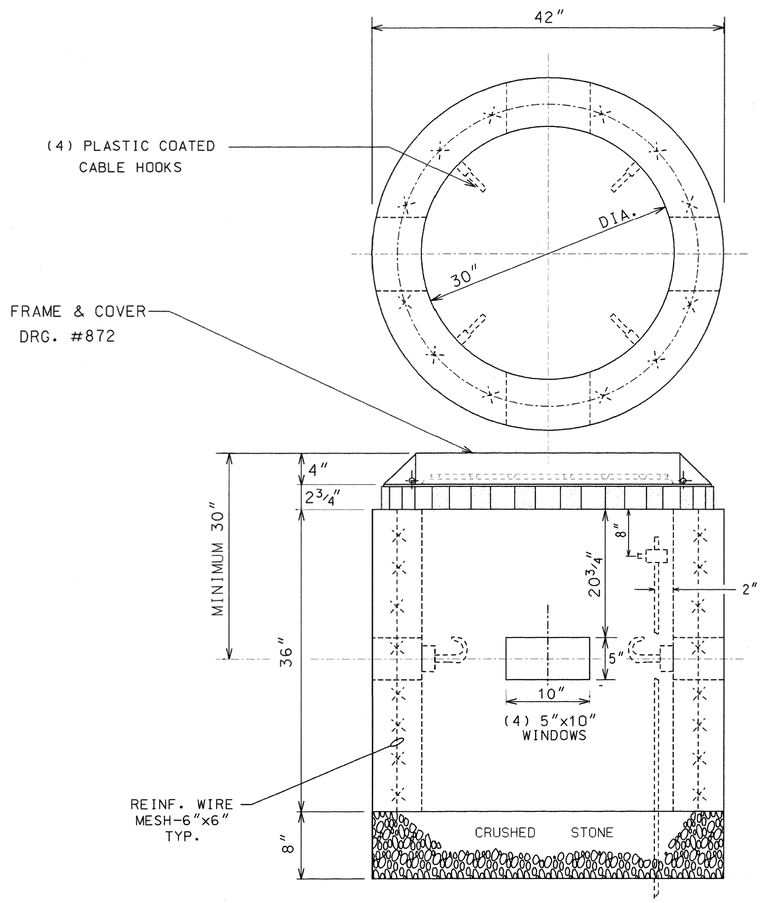

COMPLETE COMMODITY CODE NO. 05-6610-5310M			
CODE NO.	MATERIALS	SIZE	QUAN.
(1) 05-6610-5310	PRE-CAST HANDHOLE	30"X36"	1
(2) 05-9075-5470	STONE 3/4" CRUSHED	BAG	5
(2) 05-5082-5330	SONO TUBE	30"	1
(2) 05-5082-5342	SONO TUBE	42"	1
(2) 05-3267-2940	CONC. REDI-MIX	CU. YD.	1/2
(2) 57-0770-0000	6" X 6" MESH	36"X10'	1
05-1452-9720	BRICK		24
02-4299-5524	FRAME MANHOLE	24"	1
02-4574-5040	COVER, MANHOLE	24"	1
09-7796-9312	GROUND ROD	3/4"X12'	1
09-2630-3240	GROUND CLAMP		1

(1) PRE-CAST HANDHOLE SHALL INCLUDE CABLE HOOKS AND CONDUIT KNOCKOUTS.
(2) THESE ITEMS ARE FOR POURED-IN-PLACE HANDHOLES ONLY.

CONSTRUCTION NOTES:

1. 8" BED OF STONE FOR DRAINAGE.
2. ALL METALLIC CONDUITS ENTERING HANDHOLE SHALL EXTEND MINIMUM 1" & MAXIMUM 3" INSIDE INNER WALL AND BE EQUIPPED WITH AN APPROVED TYPE OF THREADED GROUNDING BUSHING.

B	01-23-00	ADDED CABLE HOOKS PER COMMISSIONER MURPHY	(RC/RI)
A	12-8-95	REDRAW (CAD)	MP.
	DATE	REVISION	

30" DIA. CONCRETE HANDHOLE

CITY OF CHICAGO
DEPT. OF STREETS AND SANITATION
BUREAU OF ELECTRICITY
DIVISION OF ELECTRICAL ENGINEERING

DRAFTSMAN:	CHIEF DRAFTSMAN:	ENGINEER:
M. PATTON	B. CARTER	TROMPKA DEBARTOLO

SUPERVISING ENGINEER: ELEC. DESIGN ENGR.:
ENGINEER OF ELECTRICITY:
GEN'L SUPT. OF ELECTRICITY:
DEPUTY COMMISSIONER:

DWG. NO. 867

SIZE: 11" 17" SCALE: NONE DATE: 12-8-95

DESIGN BY:										
DRAWN BY:										
CHECKED BY:										
APPROVED BY:		4	7/3/2023	ISSUED FOR BID	BTW	BTW	MJL			
CDOT/APPROVED BY:		NO.	DATE	REVISIONS	DES.	DRW.	CHK.	DCCO	CDOT	

TRANSYSTEMS
222 SOUTH RIVERSIDE PLAZA SUITE 610
CHICAGO, ILLINOIS 60606

SKIDMORE, OWINGS & MERRILL LLP
224 SOUTH MICHIGAN AVENUE, SUITE 1000
CHICAGO, ILLINOIS 60604

CHICAGO DEPARTMENT OF TRANSPORTATION
DIVISION OF ENGINEERING

STATE / LAKE LOOP ELEVATED STATION
200 NORTH STATE STREET, CHICAGO, IL 60601

DEO STANDARD DRAWINGS

CDOT PROJECT D-1-209 | DATE: 7/3/2023

SPEC. NO.

DRAWING NO. CTS-115

REVISION NO.

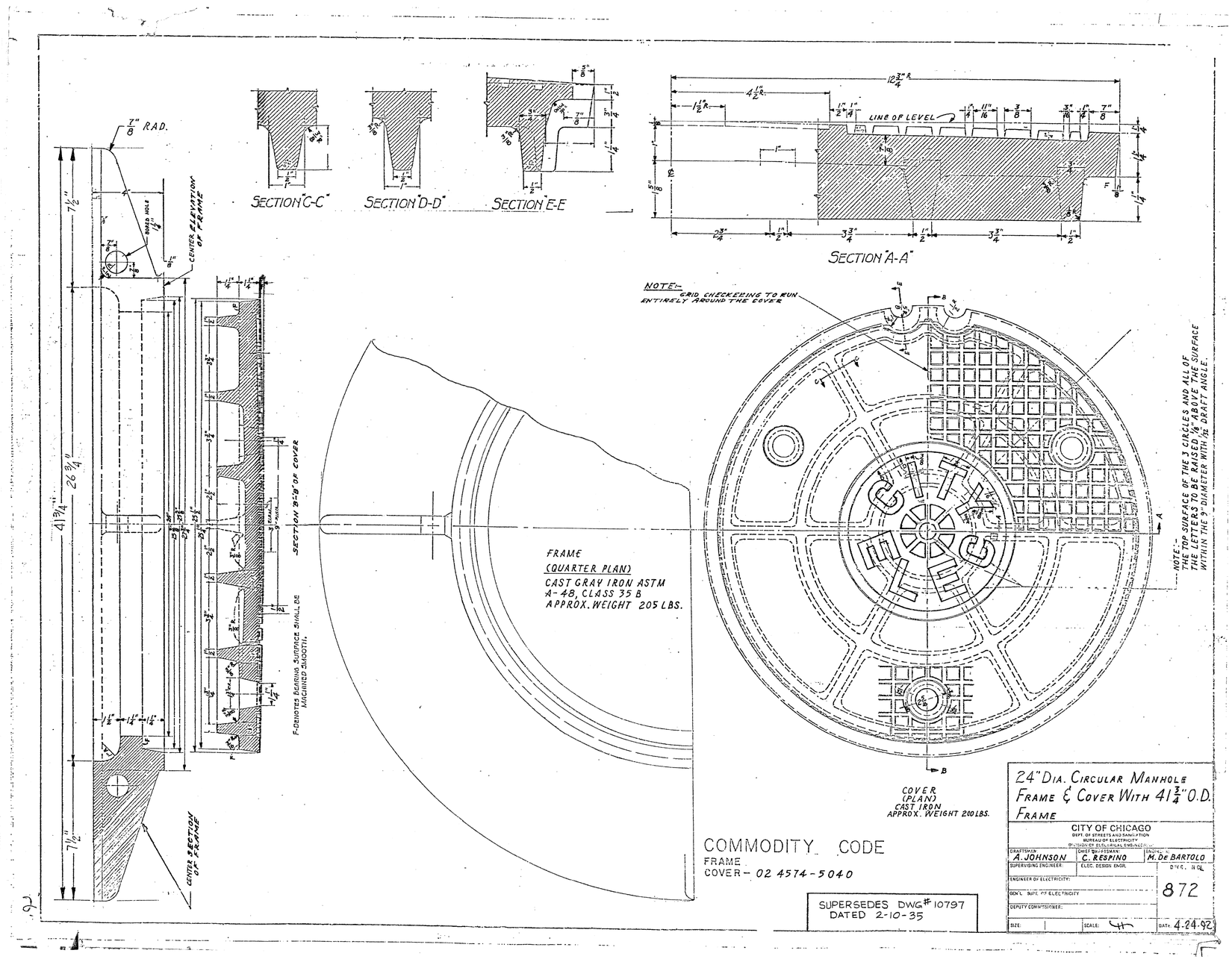

COMMODITY CODE

FRAME

COVER – 02 4574-5040

SUPERSEDES DWG # 10797
DATED 2-10-35

24" DIA. CIRCULAR MANHOLE FRAME & COVER WITH 41¾" O.D. FRAME

CITY OF CHICAGO
DEPT. OF STREETS AND SANITATION
BUREAU OF ELECTRICITY
DIVISION OF ELECTRICAL ENGINEERING

DRAFTSMAN: A. JOHNSON	CHIEF DESIGNER: C. RESPINO	ENGINEER: M. DE BARTOLO
SUPERVISING ENGINEER:	ELEC. DESIGN ENGR.	DWG. NO. 872
ENGINEER OF ELECTRICITY:		
GEN'L SUPT. OF ELECTRICITY		
DEPUTY COMMISSIONER:		
SIZE:	SCALE: 4"	DATE: 4-24-92

DESIGN BY:										
DRAWN BY:										
CHECKED BY:										
APPROVED BY:		4	7/3/2023	ISSUED FOR BID	BTW	BTW	MJL		
CDOT/APPROVED BY:		NO.	DATE	REVISIONS	DES.	DRW.	CHK.	DCCO	CDOT

TranSystems
TRANSYSTEMS
222 SOUTH RIVERSIDE PLAZA SUITE 610
CHICAGO, ILLINOIS 60606

SOM
SKIDMORE, OWINGS & MERRILL LLP
224 SOUTH MICHIGAN AVENUE, SUITE 1000
CHICAGO, ILLINOIS 60604

CDOT
CHICAGO DEPARTMENT OF TRANSPORTATION
DIVISION OF ENGINEERING

STATE / LAKE LOOP ELEVATED STATION
200 NORTH STATE STREET, CHICAGO, IL 60601

DEO STANDARD DRAWINGS

CDOT PROJECT D-1-209

DATE: 7/3/2023

SPEC. NO.

DRAWING NO. CTS-116

REVISION NO.

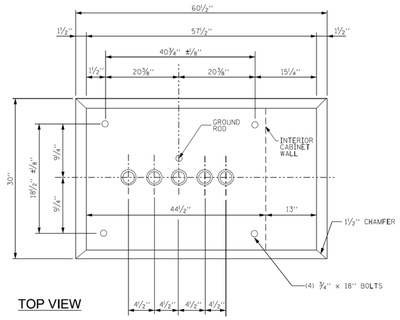

TOP VIEW

DIMENSIONS FOR LOCATIONS OF ANCHOR BOLTS TO BE STRICTLY ADHERED TO.

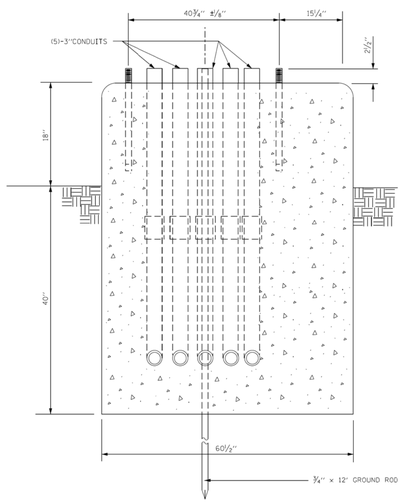

FRONT VIEW

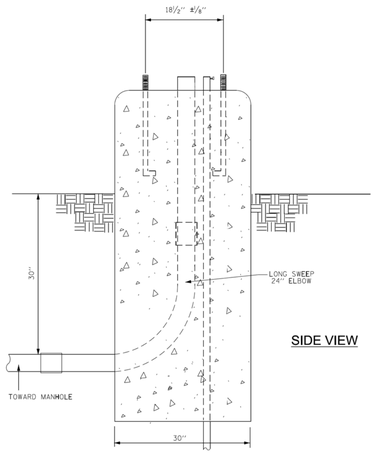

SIDE VIEW

TYPE SUPER "P" FOUNDATION

FOR BASE MOUNTED
TRAFFIC SIGNAL CONTROL CABINET

SUPERSEDES DWG. # 888 DATED 6-23-1993

CITY OF CHICAGO
DEPARTMENT OF TRANSPORTATION
DIVISION OF ENGINEERING

REV	DATE	DESCRIPTION
D	2-28-22	CORRECTED GROUND ROD LENGTH
C	10-09-20	ADJUSTED ANCHOR ROD SPACING
B	6-10-05	LENGTH OF BASE TO 60 ½"
A	5-24-96	BOLT DIMENSIONS FOR P-38 & P-44 CABINETS

DRAFTSMAN: A. MAROTTA
ENGINEER: J. VONDRA
ENGINEER OF ELECTRICITY: J. ZHANG
DEPUTY COMMISSIONER:
SIZE: 16" | 21" SCALE: NONE DATE: 1/28/21
DWG. NO. **888A**

Alteration of this drawing without written permission is forbidden.

DESIGN BY:										
DRAWN BY:										
CHECKED BY:										
APPROVED BY:		4	7/3/2023	ISSUED FOR BID	BTW	BTW	MJL			
CDOT/APPROVED BY:		NO.	DATE	REVISIONS	DES.	DRW.	CHK.	DCCO	CDOT	

TRANSYSTEMS
222 SOUTH RIVERSIDE PLAZA SUITE 610
CHICAGO, ILLINOIS 60606

SKIDMORE, OWINGS & MERRILL LLP
224 SOUTH MICHIGAN AVENUE, SUITE 1000
CHICAGO, ILLINOIS 60604

CHICAGO DEPARTMENT OF TRANSPORTATION
DIVISION OF ENGINEERING

STATE / LAKE LOOP ELEVATED STATION
200 NORTH STATE STREET, CHICAGO, IL 60601

DEO STANDARD DRAWINGS

CDOT PROJECT D-1-209 | DATE: 7/3/2023

SPEC. NO.

DRAWING NO. CTS-117

REVISION NO.

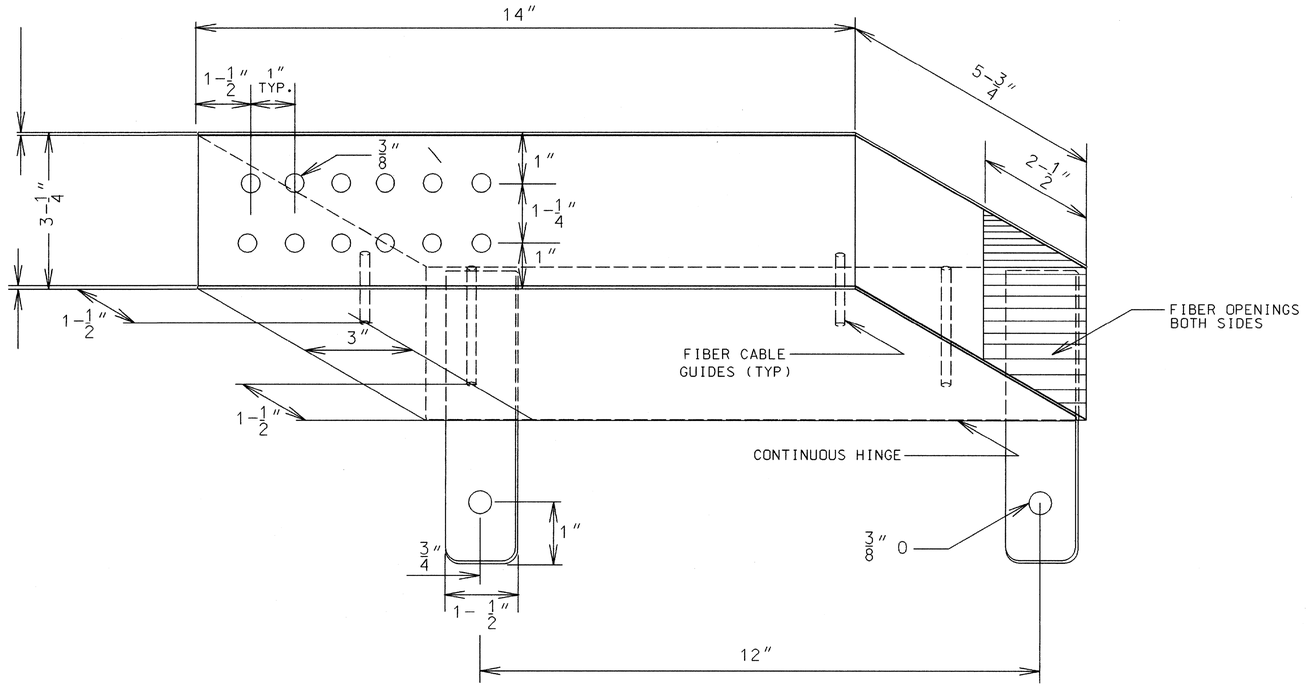

FIBER OPTIC PATCH PANEL
FOR CITY OF CHICAGO TRAFFIC SIGNAL CONTROLLER

THIS PANEL WAS SUPPLIED FOR C.B.D. INTERCONNECT
AND IS TO BE THE STANDARD FOR ALL CITY INSTALLATIONS

FIBER OPTIC PATCH PANEL

CITY OF CHICAGO
DEPT. OF STREETS AND SANITATION
BUREAU OF ELECTRICITY
DIVISION OF ELECTRICAL ENGINEERING

DRAFTSMAN:	CHIEF DRAFTSMAN:	ENGINEER:
ROBERT IVY	ROBERT CARTER	WALTER TROMPKA

SUPERVISING ENGINEER:
ELEC. DESIGN ENGR.:
ENGINEER OF ELECTRICITY:
GEN'L SUPT. OF ELECTRICITY:
DEPUTY COMMISSIONER: Brian S. Murphy

DWG. NO. 909

SIZE: SCALE: DATE: 11-01-02

DESIGN BY:										
DRAWN BY:										
CHECKED BY:										
APPROVED BY:		4	7/3/2023	ISSUED FOR BID	BTW	BTW	MJL			
CDOT/APPROVED BY:		NO.	DATE	REVISIONS	DES.	DRW.	CHK.	DCCO	CDOT	

TRANSYSTEMS
222 SOUTH RIVERSIDE PLAZA SUITE 610
CHICAGO, ILLINOIS 60606

SKIDMORE, OWINGS & MERRILL LLP
224 SOUTH MICHIGAN AVENUE, SUITE 1000
CHICAGO, ILLINOIS 60604

CHICAGO DEPARTMENT OF TRANSPORTATION
DIVISION OF ENGINEERING

STATE / LAKE LOOP ELEVATED STATION
200 NORTH STATE STREET, CHICAGO, IL 60601

SPEC. NO.

DEO STANDARD DRAWINGS

DRAWING NO. CTS-118

CDOT PROJECT D-1-209

DATE: 7/3/2023

REVISION NO.

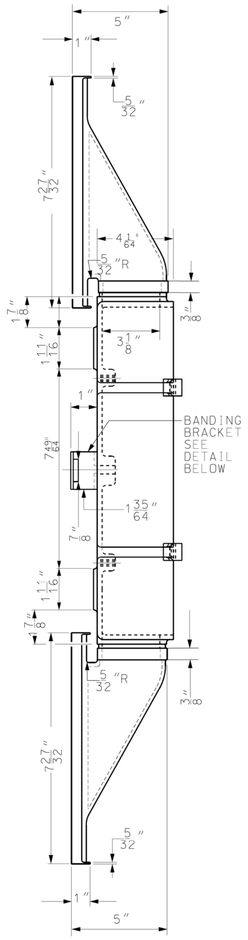

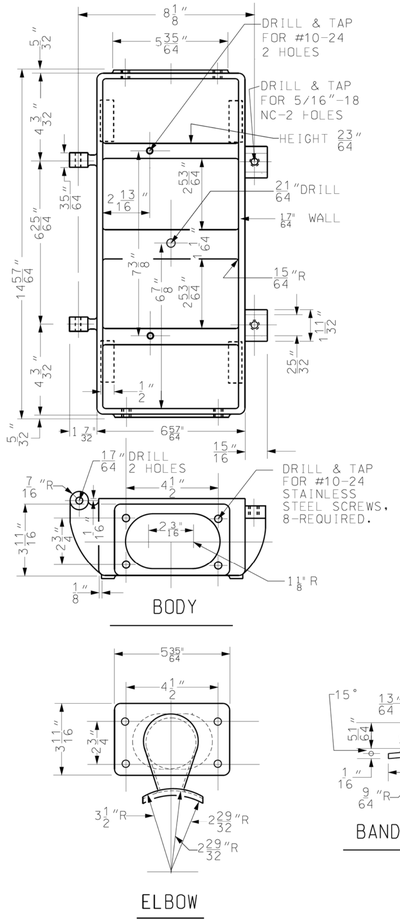

BODY

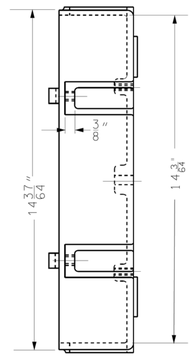

PIN

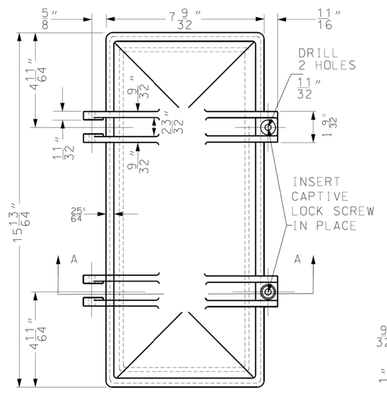

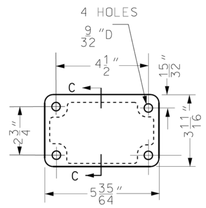

TOP PLATE

DETAIL "B"

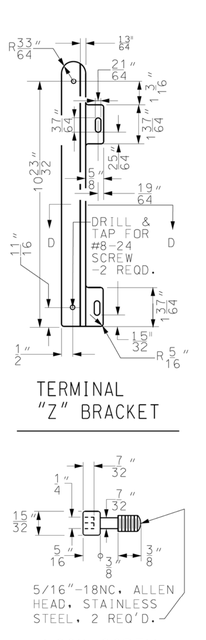

TERMINAL "Z" BRACKET

5/16"-18NC, ALLEN HEAD, STAINLESS STEEL, 2 REQ'D.

LOCK SCREW

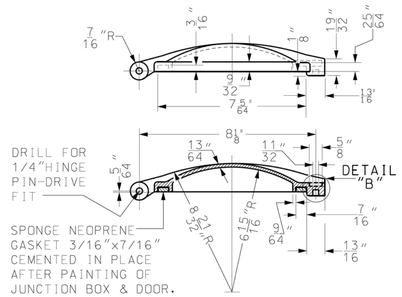

SECTION "A"

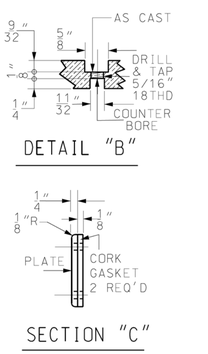

SECTION "C"

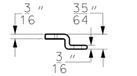

SECTION "D"

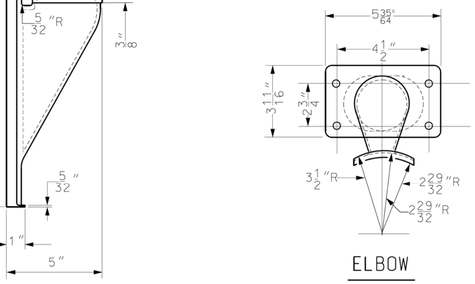

ELBOW

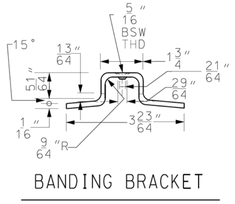

BANDING BRACKET

DATE: 7/24/2015
FILE: N:\Specifications\MISC\New Drawings\954_07242015.dgn

MATERIALS

BODY, DOOR, ELBOW & PLATE: CAST ALUMINUM ALLOY. TERMINAL MTG. BRACKET: ALUMINUM ALLOY.
SCREWS, HINGE PINS, BANDING BRACKET: STAINLESS STEEL.
CORK GASKET 1/8" THICK, TO BE FURNISHED BETWEEN FLAT PLATE AND BODY
SPONGE NEOPRENE GASKET 14 51/64" x 7 5/64" x 7/16", TO BE FURNISHED BETWEEN DOOR AND BODY

A	07/24/15	ELBOW ON TOP OF BOX ADDED.
	DATE	REVISION

SUPERSEDES DWG. # 832 DATED 5-1-85

JUNCTION BOX
FOR
TRAFFIC SIGNAL & FIRE ALARM

CITY OF CHICAGO
DEPT. OF STREETS AND SANITATION
BUREAU OF ELECTRICITY
DIVISION OF ELECTRICAL ENGINEERING

DRAFTSMAN: O. LETAMENDI	CHIEF DRAFTSMAN: R.C.	ENGINEER: O. LETAMENDI
SUPERVISING ENGINEER:	ELEC. DESIGN ENGR.	DWG. NO. 954
ENGINEER OF ELECTRICITY:		
GEN'L SUPT. OF ELECTRICITY:		
COMMISSIONER:		
SIZE:	SCALE: NONE	DATE: 5-3-02

DESIGN BY:										
DRAWN BY:										
CHECKED BY:										
APPROVED BY:		4	7/3/2023	ISSUED FOR BID	BTW	BTW	MJL			
CDOT/APPROVED BY:		NO.	DATE	REVISIONS	DES.	DRW.	CHK.	DCCO	CDOT	

TRANSYSTEMS
222 SOUTH RIVERSIDE PLAZA SUITE 610
CHICAGO, ILLINOIS 60606

SKIDMORE, OWINGS & MERRILL LLP
224 SOUTH MICHIGAN AVENUE, SUITE 1000
CHICAGO, ILLINOIS 60604

CHICAGO DEPARTMENT OF TRANSPORTATION
DIVISION OF ENGINEERING

STATE / LAKE LOOP ELEVATED STATION
200 NORTH STATE STREET, CHICAGO, IL 60601

DEO STANDARD DRAWINGS

CDOT PROJECT D-1-209 | DATE: 7/3/2023

SPEC. NO.

DRAWING NO. CTS-119

REVISION NO.

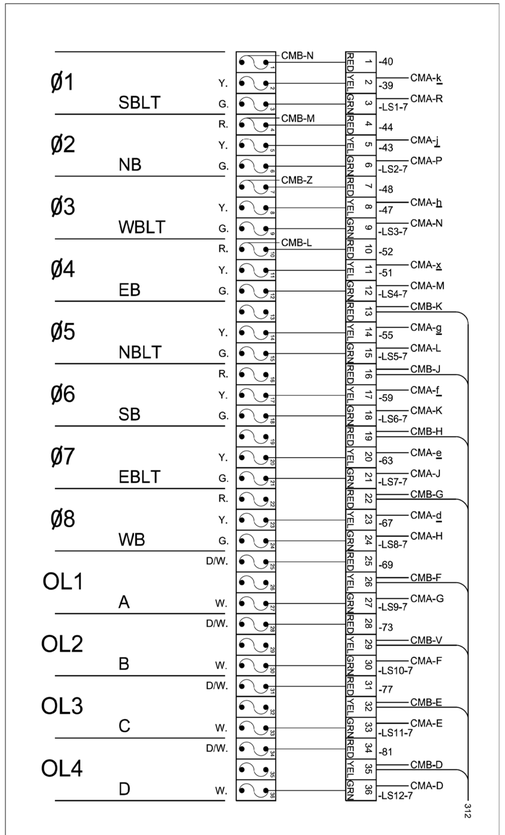

12 POSITION FIELD TERMINATION

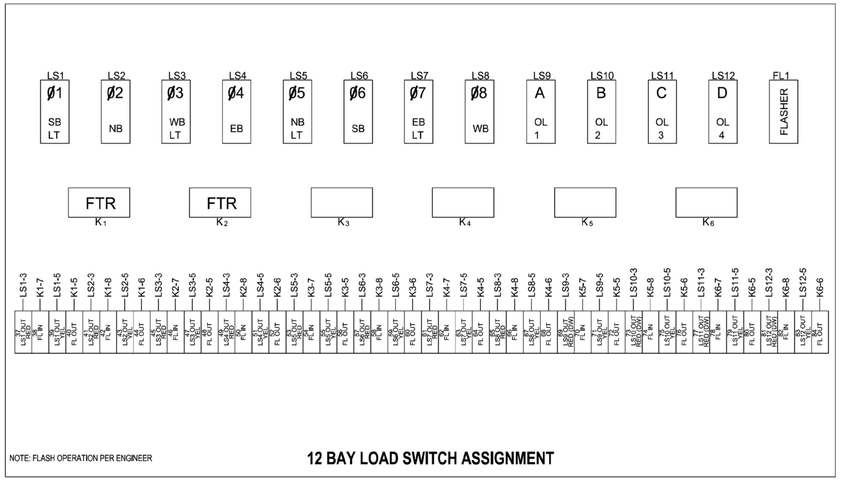

NOTE: FLASH OPERATION PER ENGINEER

12 BAY LOAD SWITCH ASSIGNMENT

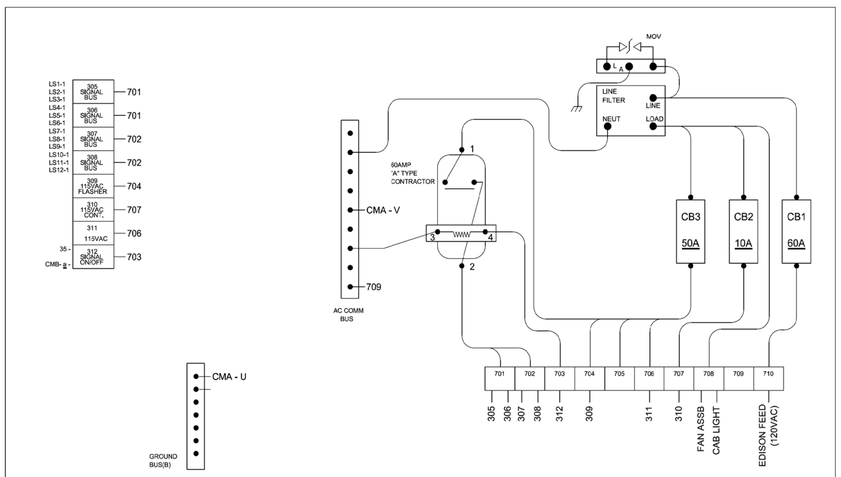

POWER SUPPLY PANEL

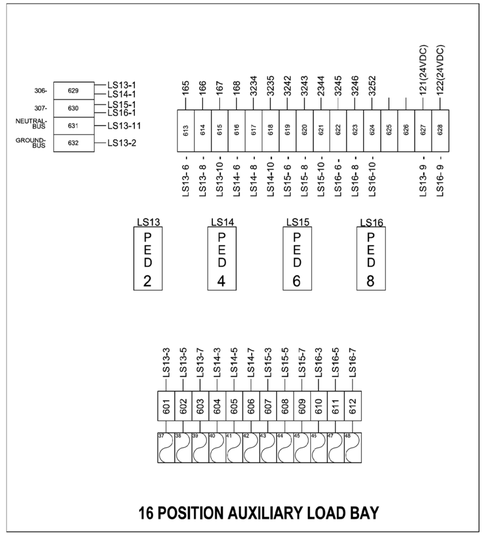

16 POSITION AUXILIARY LOAD BAY

REV	DATE	DESCRIPTION
A		

LOAD SWITCH AND CONFLICT ASSIGNMENT
TYPICAL 8-PHASE INTERSECTION

CITY OF CHICAGO
DEPARTMENT OF TRANSPORTATION
DIVISION OF ENGINEERING

DRAFTSMAN:	A. MAROTTA	DWG. NO. 962
ENGINEER:	J. VONDRA	
ENGINEER OF ELECTRICITY:	J. ZHANG	
DEPUTY COMMISSIONER:		
SIZE: 22" | 34"	SCALE: NONE	DATE: 1/28/2021

DATE PLOTTED: 2/5/2021
FILE NAME: N:\PROJ\0020231.00\0020231.01\06-New Specs & Standards\962-Load Switch and Conflict Assignment\CAD\609621-Load Switch and Conflict Assignment.dgn

DESIGN BY:										
DRAWN BY:										
CHECKED BY:										
APPROVED BY:		4	7/3/2023	ISSUED FOR BID	BTW	BTW	MJL		
CDOT/APPROVED BY:		NO.	DATE	REVISIONS	DES.	DRW.	CHK.	DCCO	CDOT

TRANSYSTEMS
222 SOUTH RIVERSIDE PLAZA SUITE 610
CHICAGO, ILLINOIS 60606

SKIDMORE, OWINGS & MERRILL LLP
224 SOUTH MICHIGAN AVENUE, SUITE 1000
CHICAGO, ILLINOIS 60604

CHICAGO DEPARTMENT OF TRANSPORTATION
DIVISION OF ENGINEERING

STATE / LAKE LOOP ELEVATED STATION
200 NORTH STATE STREET, CHICAGO, IL 60601

DEO STANDARD DRAWINGS

CDOT PROJECT D-1-209

DATE: 7/3/2023

SPEC. NO.

DRAWING NO. CTS-120

REVISION NO.

—A— CONTROLLER A CABLE ASSY

PIN	COLOR	FUNCTION	TERM
A	BLU	FAULT MONITOR	87
B	BLU	24 VDC EXTERNAL	37
C	BLU	CONT VOLT MON	9
D	BLU	▼ RED	255
E	BLU	▼ DON'T WALK	141
F	BLU	▼ YELLOW	254
G	BLU	▼ DON'T WALK	142
H	BLU	† PED CLEAR	140
J	BLU	† WALK	139
K	BLU	† VEH CALL	3
L	BLU	† PED CALL	16
M	BLU	† HOLD	72
N	BLU	STOP TIMING R1	11
P	BLU	INH. MAX TERM R1	41
R	BLU	EXTERNAL START	10
S	BLU	INT. ADV CONT	14
T	BLU	IND. LAMP CONT	23
U	WH	AC COMMON	83
V	GRN	CHASSIS GROUND	98
W	BLU	LOGIC GROUND	55
X	BLU	▼ GRN	257
Y	BLU	STATUS BIT C R1	123
Z	BLU	▼ CHECK	256
a	BLU	▼ PED CLEAR	143
b	BLU	▼ YELLOW	258
c	BLU	IND. REST R1	69
d	BLU	† CHECK	100
e	BLU	MODE B	114
f	BLU	CNA B	52
g	BLU	W VEH CALL	1
h	BLU	W PED CALL	15
j	BLU	W HOLD	71
k	BLU	FORCE OFF R1	27
m	BLU	EXT MIN RECALL	79
n	BLU	MAN CONT ENABLE	13
p	BLU	CNA C	51
q	BLU	TEST A	24
r	BLK	AC ▼	84
s	BLU	MODE A	113

—B— CONTROLLER B CABLE ASSY

PIN	COLOR	FUNCTION	TERM
A	BLU	▼ NEXT	85
B	BLU	PREEMPT 2	116
C	BLU	† NEXT	86
D	BLU	▼ GREEN	253
E	BLU	▼ YELLOW	252
F	BLU	▼ RED	251
G	BLU	† RED	121
H	BLU	† PED CLEAR	154
J	BLU	† DON'T WALK	150
K	BLU	† CHECK	102
L	BLU	† VEH CALL	4
M	BLU	† PED CALL	18
N	BLU	† HOLD	74
P	BLU	‡ PED CALL	17
R	BLU	‡ OMIT	45
S	BLU	† OMIT	44
T	BLU	† PED OMIT	61
U	BLU	▼ OMIT	43
V	BLU	PED RECYCLE R2	68
W	BLU	PREEMPT 4	117
X	BLU	PREEMPT 5	118
Y	BLU	‡ WALK	153
Z	BLU	‡ PED CLEAR	149
a	BLU	‡ DON'T WALK	148
b	BLU	‡ YELLOW	147
c	BLU	‡ RED	146
d	BLU	‡ CHECK	103
e	BLU	MAX E R2	32
f	BLU	TEST B	25
g	BLU	WALK REST MOD	53
h	BLU	‡ HOLD	75
j	BLU	‡ VEH CALL	5
k	BLU	‡ PED CALL	19
m	BLU	‡ OMIT	46
n	BLU	‡ HOLD	76
p	BLU	‡ VEH CALL	6
q	BLU	‡ PED CALL	20
r	BLU	‡ OMIT	47
s	BLU	‡ PED OMIT	62
t	BLU	‡ RED	269
u	BLU	‡ YELLOW	270
v	BLU	‡ DON'T WALK	271
w	BLU	‡ CHECK	105
x	BLU	‡ NEXT	89
y	BLU	‡ OMIT	48
z	BLU	‡ HOLD	77
a	BLU	‡ PED CALL	21
b	BLU	‡ OMIT	49
c	BLU	‡ VEH CALL	7
d	BLU	‡ PED CALL	22
e	BLU	‡ HOLD	78
f	BLU	‡ OMIT	50
g	BLU	‡ NEXT	91
h	BLU	‡ VEH CALL	8
j	BLU	‡ PED CALL	23
k	BLU	‡ HOLD	79
m	BLU	‡ OMIT	51
n	BLU	‡ NEXT	92
p	BLU	‡ VEH CALL	9
q	BLU	‡ PED CALL	24
r	BLU	‡ HOLD	80
s	BLU	‡ OMIT	52
t	BLU	‡ NEXT	93
u	BLU	‡ VEH CALL	10
v	BLU	‡ PED CALL	25
w	BLU	‡ HOLD	81
x	BLU	‡ OMIT	95
y	BLU	‡ NEXT	94
z	BLU	‡ VEH CALL	12
a	BLU	‡ PED CALL	26
b	BLU	‡ HOLD	82
c	BLU	‡ OMIT	96
d	BLU	‡ NEXT	97
SH	GRN	SHELL GROUND	99

—C— CONTROLLER C CABLE ASSY

PIN	COLOR	FUNCTION	TERM
A	BLU	STATUS BIT A R2	124
B	BLU	STATUS BIT B R2	122
C	BLU	† DON'T WALK	152
D	BLU	▼ CHECK	101
E	BLU	MAX TERM R2	33
F	BLU	▼ YELLOW	275
G	BLU	▼ WALK	274
H	BLU	▼ RED	269
J	BLU	† YELLOW	270
K	BLU	† PED CLEAR	156
L	BLU	† DON'T WALK	155
M	BLU	† NEXT	89
N	BLU	† ON	31
P	BLU	† VEH CALL	5
R	BLU	† PED CALL	19
S	BLU	† OMIT	46
T	BLU	† HOLD	76
U	BLU	‡ PED CALL	31
V	BLU	‡ VEH CALL	7
W	BLU	† PED CALL	20
X	BLU	† HOLD	78
Y	BLU	FORCE OFF R2	28
Z	BLU	PREEMPT RECALL	115
a	BLU	‡ WALK	153
b	BLU	‡ PED CLEAR	149
c	BLU	‡ DON'T WALK	148
d	BLU	‡ YELLOW	147
e	BLU	‡ RED	146
f	BLU	‡ CHECK	103
g	BLU	MAX E R2	32
h	BLU	OLA GREEN	129
j	BLU	OLB YELLOW	131
k	BLU	OLB RED	130
m	BLU	OLC RED	133
n	BLU	OLD YELLOW	137
p	BLU	OLC GREEN	136
q	BLU	OLB GREEN	132
r	BLU	OLC YELLOW	134
s	BLU	‡ OMIT	48
t	BLU	‡ NEXT	91
u	BLU	‡ PED CLEAR	159
v	BLU	‡ CHECK	104
w	BLU	† ON	34
x	BLU	† NEXT	90
y	BLU	‡ HOLD	77
z	BLU	‡ CHECK	106
a	BLU	† ON	36
b	BLU	‡ NEXT	92
c	BLU	‡ WALK	163
d	BLU	‡ PED CLEAR	162
e	BLU	‡ WALK	160
f	BLU	‡ CHECK	105
g	BLU	‡ ON	35
h	BLU	‡ NEXT	91
j	BLU	‡ ON	37
k	BLU	‡ NEXT	93
m	BLU	‡ HOLD	79
n	BLU	‡ CHECK	106
p	BLU	‡ ON	38
q	BLU	‡ NEXT	94
r	BLU	‡ HOLD	80
s	BLU	‡ CHECK	107
t	BLU	‡ ON	39
u	BLU	‡ NEXT	95
v	BLU	‡ HOLD	81
w	BLU	‡ CHECK	108
x	BLU	‡ ON	40
y	BLU	‡ NEXT	96
z	BLU	‡ HOLD	82
a	BLU	‡ CHECK	109
b	BLU	‡ ON	41
c	BLU	‡ NEXT	97
d	BLU	‡ HOLD	83
e	BLU	‡ CHECK	110
f	BLU	‡ ON	42
g	BLU	‡ NEXT	98
h	BLU	‡ HOLD	84
j	BLU	‡ CHECK	111
k	BLU	‡ ON	43
m	BLU	‡ NEXT	99
n	BLU	‡ HOLD	85
p	BLU	‡ CHECK	112
q	BLU	‡ ON	44
r	BLU	‡ NEXT	100
s	BLU	‡ HOLD	86
t	BLU	‡ CHECK	113
u	BLU	‡ ON	45
v	BLU	‡ NEXT	101
w	BLU	‡ HOLD	87
x	BLU	‡ CHECK	114
y	BLU	‡ ON	46
z	BLU	‡ NEXT	102
a	BLU	‡ HOLD	88
b	BLU	‡ CHECK	115
c	BLU	‡ ON	47
d	BLU	‡ NEXT	103
e	BLU	‡ HOLD	89
f	BLU	‡ CHECK	116
g	BLU	‡ ON	48
h	BLU	‡ NEXT	104
j	BLU	‡ HOLD	90
k	BLU	‡ CHECK	117
m	BLU	‡ ON	49
n	BLU	‡ NEXT	105
p	BLU	‡ HOLD	91
q	BLU	‡ CHECK	118
r	BLU	‡ ON	50
s	BLU	‡ NEXT	106
t	BLU	‡ HOLD	92
u	BLU	‡ CHECK	119
v	BLU	‡ ON	51
w	BLU	‡ NEXT	107
x	BLU	‡ HOLD	93
y	BLU	‡ CHECK	120
z	BLU	‡ ON	52
a	BLU	‡ NEXT	108
b	BLU	‡ HOLD	94
c	BLU	‡ CHECK	121
d	BLU	‡ ON	53
e	BLU	‡ NEXT	109
f	BLU	‡ HOLD	95
g	BLU	‡ CHECK	122
h	BLU	‡ ON	54
j	BLU	‡ NEXT	110
k	BLU	‡ HOLD	96
m	BLU	‡ CHECK	123
n	BLU	‡ ON	55
p	BLU	‡ NEXT	111
q	BLU	‡ HOLD	97
r	BLU	‡ CHECK	124
s	BLU	‡ ON	56
t	BLU	‡ NEXT	112
u	BLU	‡ HOLD	98
v	BLU	‡ CHECK	125
w	BLU	‡ ON	57
x	BLU	‡ NEXT	113
y	BLU	‡ HOLD	99
z	BLU	‡ CHECK	126
a	BLU	‡ ON	58
b	BLU	‡ NEXT	114
c	BLU	‡ HOLD	100
d	BLU	‡ CHECK	127
e	BLU	‡ ON	59
f	BLU	‡ NEXT	115
g	BLU	‡ HOLD	101
h	BLU	‡ CHECK	128
j	BLU	‡ ON	60
k	BLU	‡ NEXT	116
m	BLU	‡ HOLD	102
n	BLU	‡ CHECK	129
p	BLU	‡ ON	61
q	BLU	‡ NEXT	117
r	BLU	‡ HOLD	103
s	BLU	‡ CHECK	130
t	BLU	‡ ON	62
u	BLU	‡ NEXT	118
v	BLU	‡ HOLD	104
w	BLU	‡ CHECK	131
x	BLU	‡ ON	63
y	BLU	‡ NEXT	119
z	BLU	‡ HOLD	105
a	BLU	‡ CHECK	132
b	BLU	‡ ON	64
c	BLU	‡ NEXT	120
d	BLU	‡ HOLD	106
e	BLU	‡ CHECK	133
f	BLU	‡ ON	65
g	BLU	‡ NEXT	121
h	BLU	‡ HOLD	107
j	BLU	‡ CHECK	134
k	BLU	‡ ON	66
m	BLU	‡ NEXT	122
n	BLU	‡ HOLD	108
p	BLU	‡ CHECK	135
q	BLU	‡ ON	67
r	BLU	‡ NEXT	123
s	BLU	‡ HOLD	109
t	BLU	‡ CHECK	136
u	BLU	‡ ON	68
v	BLU	‡ NEXT	124
w	BLU	‡ HOLD	110
x	BLU	‡ CHECK	137
y	BLU	‡ ON	69
z	BLU	‡ NEXT	125
a	BLU	‡ HOLD	111
b	BLU	‡ CHECK	138
c	BLU	‡ ON	70
d	BLU	‡ NEXT	126
e	BLU	‡ HOLD	112
f	BLU	‡ CHECK	139
g	BLU	‡ ON	71
h	BLU	‡ NEXT	127
j	BLU	‡ HOLD	113
k	BLU	‡ CHECK	140
m	BLU	‡ ON	72
n	BLU	‡ NEXT	128
p	BLU	‡ HOLD	114
q	BLU	‡ CHECK	141
r	BLU	‡ ON	73
s	BLU	‡ NEXT	129
t	BLU	‡ HOLD	115
u	BLU	‡ CHECK	142
v	BLU	‡ ON	74
w	BLU	‡ NEXT	130
x	BLU	‡ HOLD	116
y	BLU	‡ CHECK	143
z	BLU	‡ ON	75
a	BLU	‡ NEXT	131
b	BLU	‡ HOLD	117
c	BLU	‡ CHECK	144
d	BLU	‡ ON	76
e	BLU	‡ NEXT	132
f	BLU	‡ HOLD	118
g	BLU	‡ CHECK	145
h	BLU	‡ ON	77
j	BLU	‡ NEXT	133
k	BLU	‡ HOLD	119
m	BLU	‡ CHECK	146
n	BLU	‡ ON	78
p	BLU	‡ NEXT	134
q	BLU	‡ HOLD	120
r	BLU	‡ CHECK	147
s	BLU	‡ ON	79
t	BLU	‡ NEXT	135
u	BLU	‡ HOLD	121
v	BLU	‡ CHECK	148
w	BLU	‡ ON	80
x	BLU	‡ NEXT	136
y	BLU	‡ HOLD	122
z	BLU	‡ CHECK	149
a	BLU	‡ ON	81
b	BLU	‡ NEXT	137
c	BLU	‡ HOLD	123
d	BLU	‡ CHECK	150
e	BLU	‡ ON	82
f	BLU	‡ NEXT	138
g	BLU	‡ HOLD	124
h	BLU	‡ CHECK	151
j	BLU	‡ ON	83
k	BLU	‡ NEXT	139
m	BLU	‡ HOLD	125
n	BLU	‡ CHECK	152
p	BLU	‡ ON	84
q	BLU	‡ NEXT	140
r	BLU	‡ HOLD	126
s	BLU	‡ CHECK	153
t	BLU	‡ ON	85
u	BLU	‡ NEXT	141
v	BLU	‡ HOLD	127
w	BLU	‡ CHECK	154
x	BLU	‡ ON	86
y	BLU	‡ NEXT	142
z	BLU	‡ HOLD	128
a	BLU	‡ CHECK	155
b	BLU	‡ ON	87
c	BLU	‡ NEXT	143
d	BLU	‡ HOLD	129
e	BLU	‡ CHECK	156
f	BLU	‡ ON	88
g	BLU	‡ NEXT	144
h	BLU	‡ HOLD	130
j	BLU	‡ CHECK	157
k	BLU	‡ ON	89
m	BLU	‡ NEXT	145
n	BLU	‡ HOLD	131
p	BLU	‡ CHECK	158
q	BLU	‡ ON	90
r	BLU	‡ NEXT	146
s	BLU	‡ HOLD	132
t	BLU	‡ CHECK	159
u	BLU	‡ ON	91
v	BLU	‡ NEXT	147
w	BLU	‡ HOLD	133
x	BLU	‡ CHECK	160
y	BLU	‡ ON	92
z	BLU	‡ NEXT	148
a	BLU	‡ HOLD	134
b	BLU	‡ CHECK	161
c	BLU	‡ ON	93
d	BLU	‡ NEXT	149
e	BLU	‡ HOLD	135
f	BLU	‡ CHECK	162
g	BLU	‡ ON	94
h	BLU	‡ NEXT	150
j	BLU	‡ HOLD	136
k	BLU	‡ CHECK	163
m	BLU	‡ ON	95
n	BLU	‡ NEXT	151
p	BLU	‡ HOLD	137
q	BLU	‡ CHECK	164
r	BLU	‡ ON	96
s	BLU	‡ NEXT	152
t	BLU	‡ HOLD	138
u	BLU	‡ CHECK	165
v	BLU	‡ ON	97
w	BLU	‡ NEXT	153
x	BLU	‡ HOLD	139
y	BLU	‡ CHECK	166
z	BLU	‡ ON	98
a	BLU	‡ NEXT	154
b	BLU	‡ HOLD	140
c	BLU	‡ CHECK	167
d	BLU	‡ ON	99
e	BLU	‡ NEXT	155
f	BLU	‡ HOLD	141
g	BLU	‡ CHECK	168
h	BLU	‡ ON	100
j	BLU	‡ NEXT	156
k	BLU	‡ HOLD	142
m	BLU	‡ CHECK	169
n	BLU	‡ ON	101
p	BLU	‡ NEXT	157
q	BLU	‡ HOLD	143
r	BLU	‡ CHECK	170
s	BLU	‡ ON	102
t	BLU	‡ NEXT	158
u	BLU	‡ HOLD	144
v	BLU	‡ CHECK	171
w	BLU	‡ ON	103
x	BLU	‡ NEXT	159
y	BLU	‡ HOLD	145
z	BLU	‡ CHECK	172
a	BLU	‡ ON	104
b	BLU	‡ NEXT	160
c	BLU	‡ HOLD	146
d	BLU	‡ CHECK	173
e	BLU	‡ ON	105
f	BLU	‡ NEXT	161
g	BLU	‡ HOLD	147
h	BLU	‡ CHECK	174
j	BLU	‡ ON	106
k	BLU	‡ NEXT	162
m	BLU	‡ HOLD	148
n	BLU	‡ CHECK	175
p	BLU	‡ ON	107
q	BLU	‡ NEXT	163
r	BLU	‡ HOLD	149
s	BLU	‡ CHECK	176
t	BLU	‡ ON	108
u	BLU	‡ NEXT	164
v	BLU	‡ HOLD	150
w	BLU	‡ CHECK	177
x	BLU	‡ ON	109
y	BLU	‡ NEXT	165
z	BLU	‡ HOLD	151
a	BLU	‡ CHECK	178
b	BLU	‡ ON	110
c	BLU	‡ NEXT	166
d	BLU	‡ HOLD	152
e	BLU	‡ CHECK	179
f	BLU	‡ ON	111
g	BLU	‡ NEXT	167
h	BLU	‡ HOLD	153
j	BLU	‡ CHECK	180
k	BLU	‡ ON	112
m	BLU	‡ NEXT	168
n	BLU	‡ HOLD	154
p	BLU	‡ CHECK	181
q	BLU	‡ ON	113
r	BLU	‡ NEXT	169
s	BLU	‡ HOLD	155
t	BLU	‡ CHECK	182
u	BLU	‡ ON	114
v	BLU	‡ NEXT	170
w	BLU	‡ HOLD	156
x	BLU	‡ CHECK	183
y	BLU	‡ ON	115
z	BLU	‡ NEXT	171
a	BLU	‡ HOLD	157
b	BLU	‡ CHECK	184
c	BLU	‡ ON	116
d	BLU	‡ NEXT	172
e	BLU	‡ HOLD	158
f	BLU	‡ CHECK	185
g	BLU	‡ ON	117
h	BLU	‡ NEXT	173
j	BLU	‡ HOLD	159
k	BLU	‡ CHECK	186
m	BLU	‡ ON	118
n	BLU	‡ NEXT	174
p	BLU	‡ HOLD	160
q	BLU	‡ CHECK	187
r	BLU	‡ ON	119
s	BLU	‡ NEXT	175
t	BLU	‡ HOLD	161
u	BLU	‡ CHECK	188
v	BLU	‡ ON	120
w	BLU	‡ NEXT	176
x	BLU	‡ HOLD	162
y	BLU	‡ CHECK	189
z	BLU	‡ ON	121
a	BLU	‡ NEXT	177
b	BLU	‡ HOLD	163
c	BLU	‡ CHECK	190
d	BLU	‡ ON	122
e	BLU	‡ NEXT	178
f	BLU	‡ HOLD	164
g	BLU	‡ CHECK	191
h	BLU	‡ ON	123
j	BLU	‡ NEXT	179
k	BLU	‡ HOLD	165
m	BLU	‡ CHECK	192
n	BLU	‡ ON	124
p	BLU	‡ NEXT	180
q	BLU	‡ HOLD	166
r	BLU	‡ CHECK	193
s	BLU	‡ ON	125
t	BLU	‡ NEXT	181
u	BLU	‡ HOLD	167
v	BLU	‡ CHECK	194
w	BLU	‡ ON	126
x	BLU	‡ NEXT	182
y	BLU	‡ HOLD	168
z	BLU	‡ CHECK	195
a	BLU	‡ ON	127
b	BLU	‡ NEXT	183
c	BLU	‡ HOLD	169
d	BLU	‡ CHECK	196
e	BLU	‡ ON	128
f	BLU	‡ NEXT	184
g	BLU	‡ HOLD	170
h	BLU	‡ CHECK	197
j	BLU	‡ ON	129
k	BLU	‡ NEXT	185
m	BLU	‡ HOLD	171
n	BLU	‡ CHECK	198
p	BLU	‡ ON	130
q	BLU	‡ NEXT	186
r	BLU	‡ HOLD	172
s	BLU	‡ CHECK	199
t	BLU	‡ ON	131
u	BLU	‡ NEXT	187
v	BLU	‡ HOLD	173
w	BLU	‡ CHECK	200
x	BLU	‡ ON	132
y	BLU	‡ NEXT	188
z	BLU	‡ HOLD	174
a	BLU	‡ CHECK	201
b	BLU	‡ ON	133
c	BLU	‡ NEXT	189
d	BLU	‡ HOLD	175
e	BLU	‡ CHECK	202
f	BLU	‡ ON	134
g	BLU	‡ NEXT	190
h	BLU	‡ HOLD	176
j	BLU	‡ CHECK	203
k	BLU	‡ ON	135
m	BLU	‡ NEXT	191
n	BLU	‡ HOLD	177
p	BLU	‡ CHECK	204
q	BLU	‡ ON	136
r	BLU	‡ NEXT	192
s	BLU	‡ HOLD	178
t	BLU	‡ CHECK	205
u	BLU	‡ ON	137
v	BLU	‡ NEXT	193
w	BLU	‡ HOLD	179
x	BLU	‡ CHECK	206
y	BLU	‡ ON	138
z	BLU	‡ NEXT	194
a	BLU	‡ HOLD	180
b	BLU	‡ CHECK	207
c	BLU	‡ ON	139
d	BLU	‡ NEXT	195
e	BLU	‡ HOLD	181
f	BLU	‡ CHECK	208
g	BLU	‡ ON	140
h	BLU	‡ NEXT	196
j	BLU	‡ HOLD	182
k	BLU	‡ CHECK	209
m	BLU	‡ ON	141
n	BLU	‡ NEXT	197
p	BLU	‡ HOLD	183
q	BLU	‡ CHECK	210
r	BLU	‡ ON	142
s	BLU	‡ NEXT	198
t	BLU	‡ HOLD	184
u	BLU	‡ CHECK	211
v	BLU	‡ ON	143
w	BLU	‡ NEXT	199
x	BLU	‡ HOLD	185
y	BLU	‡ CHECK	212
z	BLU	‡ ON	144
a	BLU	‡ NEXT	200
b	BLU	‡ HOLD	186
c	BLU	‡ CHECK	213
d	BLU	‡ ON	145
e	BLU	‡ NEXT	201
f	BLU	‡ HOLD	187
g	BLU	‡ CHECK	214
h	BLU	‡ ON	146
j	BLU	‡ NEXT	202
k	BLU	‡ HOLD	188
m	BLU	‡ CHECK	215
n	BLU	‡ ON	147
p	BLU	‡ NEXT	203
q	BLU	‡ HOLD	189
r	BLU	‡ CHECK	216
s	BLU	‡ ON	148
t	BLU	‡ NEXT	204
u	BLU	‡ HOLD	190
v	BLU	‡ CHECK	217
w	BLU	‡ ON	149
x	BLU	‡ NEXT	205
y	BLU	‡ HOLD	191
z	BLU	‡ CHECK	218
a	BLU	‡ ON	150
b	BLU	‡ NEXT	206
c	BLU	‡ HOLD	192
d	BLU	‡ CHECK	219
e	BLU	‡ ON	151
f	BLU	‡ NEXT	207
g	BLU	‡ HOLD	193
h	BLU	‡ CHECK	220
j	BLU	‡ ON	152
k	BLU	‡ NEXT	208
m	BLU	‡ HOLD	194
n	BLU	‡ CHECK	221
p	BLU	‡ ON	153
q	BLU	‡ NEXT	209
r	BLU	‡ HOLD	195
s	BLU	‡ CHECK	222
t	BLU	‡ ON	154
u	BLU	‡ NEXT	210
v	BLU	‡ HOLD	196
w	BLU	‡ CHECK	223
x	BLU	‡ ON	155
y	BLU	‡ NEXT	211
z	BLU	‡ HOLD	197
a	BLU	‡ CHECK	224
b	BLU	‡ ON	156
c	BLU	‡ NEXT	212
d	BLU	‡ HOLD	198
e	BLU	‡ CHECK	225
f	BLU	‡ ON	157
g	BLU	‡ NEXT	213
h	BLU	‡ HOLD	199
j	BLU	‡ CHECK	226
k	BLU	‡ ON	158
m	BLU	‡ NEXT	214
n	BLU	‡ HOLD	200
p	BLU	‡ CHECK	227
q	BLU	‡ ON	159
r	BLU	‡ NEXT	215
s	BLU	‡ HOLD	201
t	BLU	‡ CHECK	228
u	BLU	‡ ON	160
v	BLU	‡ NEXT	216
w	BLU	‡ HOLD	202
x	BLU	‡ CHECK	229
y	BLU	‡ ON	161
z	BLU	‡ NEXT	217
a	BLU	‡ HOLD	203
b	BLU	‡ CHECK	230
c	BLU	‡ ON	162
d	BLU	‡ NEXT	218
e	BLU	‡ HOLD	204
f	BLU	‡ CHECK	231
g	BLU	‡ ON	163
h	BLU	‡ NEXT	219
j	BLU	‡ HOLD	205
k	BLU	‡ CHECK	232
m	BLU	‡ ON	164
n	BLU	‡ NEXT	220
p	BLU	‡ HOLD	206
q	BLU	‡ CHECK	233
r	BLU	‡ ON	165
s	BLU	‡ NEXT	221
t	BLU	‡ HOLD	207
u	BLU	‡ CHECK	234
v	BLU	‡ ON	166
w	BLU	‡ NEXT	222
x	BLU	‡ HOLD	208
y	BLU	‡ CHECK	235
z	BLU	‡ ON	167
a	BLU	‡ NEXT	223
b	BLU	‡ HOLD	209
c	BLU	‡ CHECK	236
d	BLU	‡ ON	168
e	BLU	‡ NEXT	224
f	BLU	‡ HOLD	210
g	BLU	‡ CHECK	237
h	BLU	‡ ON	169
j	BLU	‡ NEXT	225
k	BLU	‡ HOLD	211
m	BLU	‡ CHECK	238
n	BLU	‡ ON	170
p	BLU	‡ NEXT	226
q	BLU	‡ HOLD	212
r	BLU	‡ CHECK	239
s	BLU	‡ ON	171
t	BLU	‡ NEXT	227
u	BLU	‡ HOLD	213
v	BLU	‡ CHECK	240
w	BLU	‡ ON	172
x	BLU	‡ NEXT	228
y	BLU	‡ HOLD	214
z	BLU	‡ CHECK	241
a	BLU	‡ ON	173
b	BLU	‡ NEXT	229
c	BLU	‡ HOLD	215
d	BLU	‡ CHECK	242
e	BLU	‡ ON	174
f	BLU	‡ NEXT	230
g	BLU	‡ HOLD	216
h	BLU	‡ CHECK	243
j	BLU	‡ ON	175
k	BLU	‡ NEXT	231
m	BLU	‡ HOLD	217
n	BLU	‡ CHECK	244
p	BLU	‡ ON	176
q	BLU	‡ NEXT	232
r	BLU	‡ HOLD	218
s	BLU	‡ CHECK	245
t	BLU	‡ ON	177
u	BLU	‡ NEXT	233
v	BLU	‡ HOLD	219
w	BLU	‡ CHECK	246
x	BLU	‡ ON	178
y	BLU	‡ NEXT	234
z	BLU	‡ HOLD	220
a	BLU	‡ CHECK	247
b	BLU	‡ ON	179
c	BLU	‡ NEXT	235
d	BLU	‡ HOLD	221
e	BLU	‡ CHECK	248
f	BLU	‡ ON	180
g	BLU	‡ NEXT	236
h	BLU	‡ HOLD	222
j	BLU	‡ CHECK	249
k	BLU	‡ ON	181
m	BLU	‡ NEXT	237
n	BLU	‡ HOLD	223
p	BLU	‡ CHECK	250
q	BLU	‡ ON	182
r	BLU	‡ NEXT	238
s	BLU	‡ HOLD	224
t	BLU	‡ CHECK	251
u	BLU	‡ ON	183
v	BLU	‡ NEXT	239
w	BLU	‡ HOLD	225
x	BLU	‡ CHECK	252
y	BLU	‡ ON	184
z	BLU	‡ NEXT	240
a	BLU	‡ HOLD	226
b	BLU	‡ CHECK	253
c	BLU	‡ ON	185
d	BLU	‡ NEXT	241
e	BLU	‡ HOLD	227
f	BLU	‡ CHECK	254
g	BLU	‡ ON	186
h	BLU	‡ NEXT	242
j	BLU	‡ HOLD	228
k	BLU	‡ CHECK	255
m	BLU	‡ ON	187
n	BLU	‡ NEXT	243
p	BLU	‡ HO

"D" CABLE ASSY(S)

PIN	WIRE	WIRE	FUNCTION	TERM
1	D-1	BROWN	FLASH MONITOR 1	3201
2	D-2	RED	CYCLE 5	3202
3	D-3	ORANGE	PE #1 CLEAR	3203
4	D-4	YELLOW	PE #3 CLEAR	3204
5	D-5	BLUE	FLASH MONITOR 2	3205
6	D-6	VIOLET	SPARE INPUT 7	3206
7	D-7	GRAY	SYSTEM INPUT	3207
8	D-8	WHI/BLK	AZ RES	3208
9	D-9	WHI/BRN	PE #2 CLEAR	3209
10	D-10	WHI/RED	UD 6 INPUT	3210
11	D-11	WHI/ORA	CALL TO WEEK 10	3211
12	D-12	WHI/YEL	SIGNAL PLAN 6	3212
13	D-13	WHI/GRN	SIGNAL PLAN 7	3213
14	D-14	WHI/BLUE	SIGNAL PLAN 8	3214
15	D-15	WHI/VIO	ACTUATION 5	3215
16	D-16	WHI/GRAY	ACTUATION 6	3216
17	D-17	WHI/BLK/BRN	ACTUATION 7	3217
18	D-18	WHI/BLK/RED	SPARE INPUT 4	3218
19	D-19	WHI/BLK/ORA	UD 7 INPUT	3219
20	D-20	WHI/BLK/YEL	ACTUATION 8	3220
21	D-21	WHI/BLK/GRN	ACTUATION 9	3221
22	D-22	WHI/BLK/BLUE	ACTUATION 10	3222
23	D-23	WHI/BLK/VIO	SPARE INPUT 5	-----
24	D-24	WHI/BLK/GRAY	UD 8 INPUT	3224
25	D-25	WHI/BRN/RED	SYSTEM (OKT 13)	3225
26	D-26	WHI/BRN/ORA	FLASH ATTAINED	3226
27	D-27	WHI/BRN/YEL	PE ACTIVE	3227
28			POLARIZING KEY	-----
29	D-29	WHI/BRN/GRN	SYSTEM OUT	3228
30	D-30	WHI/BRN/BLUE	PE 3 INPUT	3229
31	D-31	WHI/BRN/VIO	PE 4 INPUT	3230
32	D-32	WHI/BRN/GRAY	PE 5 INPUT	3231
33	D-33	WHI/RED/ORA	SIGNAL PLAN 5 INPUT	3232
34	D-34	WHI/RED/YEL	CALL TO FREE OP	3233
35	D-35	WHI/RED/GRN	OUTPUT 41	3234
36	D-36	WHI/RED/BLUE	OUTPUT 42	3235
37	D-37	WHI/RED/VIO	INTERCONNECT INHIBIT	3236
38	D-38	WHI/RED/GRAY	SPARE INPUT 6	3237
39	D-39	WHI/ORA/YRL	SYNC INHIBIT	3238
40	D-40	WHI/ORA/GRN	DIMMING	3239
41	D-41	WHI/ORA/BLUE	ADDED TIME INHIBIT	3240
42	D-42	WHI/ORA/VIO	TIME CLOCK SYNC	3241
43	D-43	WHI/ORA/GRAY	OUTPUT 43	3242
44			POLARIZING KEY	-----
45	D-45	WHI/YEL/GRN	OUTPUT 44	3243
46	D-46	WHI/YEL/BLUE	OUTPUT 45	3244
47	D-47	WHI/YEL/VIO	OUTPUT 46	3245
48	D-48	WHI/YEL/GRAY	OUTPUT 47	3246
49	D-49	WHI/GRN/BLUE	SIGNAL PLAN 4	3247
50	D-50	WHI/GRN/VIO	AUX 1 (OKT 9)	3248
51	D-51	WHI/GRN/GRAY	AUX 2 (OKT 10)	3249
52	D-52	WHI/BLUE/VIO	AUX 3 (OKT 11)	3250
53	D-53	WHI/BLUE/GRAY	AUX 4 (OKT 12)	3251
54	D-54	WHI/VIO/GRAY	OUTPUT 48 (FAST FLASH ENABLE)	3252
55	D-55	WHI/BLK/BRN/RED	FLASH OUT (OKT 8)	3253
56	D-56	WHI/BLK/BRN/ORA	OFFSET 1 (OKT 3)	3254
57	D-57	WHI/BLK/BRN/YEL	OFFSET 2 (OKT 4)	3255
58	D-58	WHI/BLK/BRN/GRN	OFFSET 3 (OKT 5)	3256
59	D-59	WHI/BLK/BRN/BLUE	CYCLE 2 (OKT 1)	3257
60	D-60	WHI/BLK/BRN/VIO	CYCLE 3 (OKT 2)	3258
61	D-61	BLACK	SPLIT 2 (OKT 6)	3259
62	D-62	WHITE	SPLIT 3 (OKT 7)	3260
63	D-63	GREEN	FAST FL IMAGE (OUT)	3223

—D—
"D" PANEL ASSY(S)

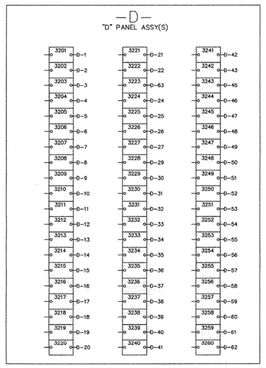

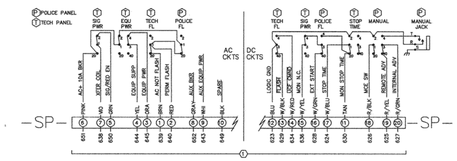

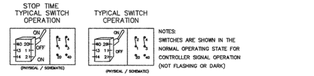

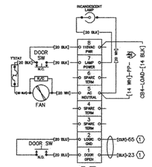

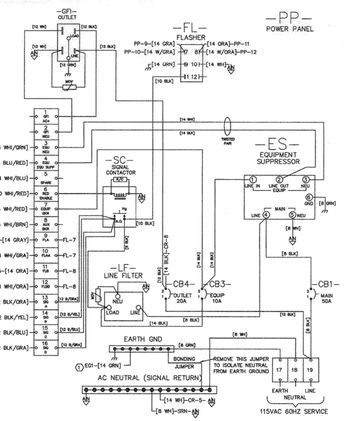

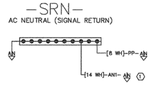

TRAFFIC CONTROLLER CABINET
BACK PANEL & POWER SUPPLY
2 OF 2

CITY OF CHICAGO
DEPT. OF STREETS AND SANITATION
BUREAU OF ELECTRICITY
DIVISION OF ELECTRICAL ENGINEERING

DRAFTSMAN: A. BAUTISTA	CHIEF DRAFTSMAN:	ENGINEER: R. POOL
SUPERVISING ENGINEER:	ELEC. DESIGN ENGR.	DWG. NO. 965
ENGINEER OF ELECTRICITY:		
GEN'L SUPT. OF ELECTRICITY:		
DEPUTY COMMISSIONER:		
SIZE: 22" | 36"	SCALE: AS SHOWN	DATE: 03/04/2008

DATE: 5/16/2008
FILE: J:\CAD_FILES\STANDARDS\Traffic Controller Cabinet.dgn

...\Traffic Controller Cabinet.dgn 5/16/2008 11:20:19 AM

DESIGN BY:										
DRAWN BY:										
CHECKED BY:										
APPROVED BY:		4	7/3/2023	ISSUED FOR BID	BTW	BTW	MJL			
CDOT/APPROVED BY:		NO.	DATE	REVISIONS	DES.	DRW.	CHK.	DCCO	CDOT	

TRANSYSTEMS
222 SOUTH RIVERSIDE PLAZA SUITE 610
CHICAGO, ILLINOIS 60606

SKIDMORE, OWINGS & MERRILL LLP
224 SOUTH MICHIGAN AVENUE, SUITE 1000
CHICAGO, ILLINOIS 60604

CHICAGO DEPARTMENT OF TRANSPORTATION
DIVISION OF ENGINEERING

STATE / LAKE LOOP ELEVATED STATION
200 NORTH STATE STREET, CHICAGO, IL 60601

DEO STANDARD DRAWINGS

CDOT PROJECT D-1-209

DATE: 7/3/2023

SPEC. NO.

DRAWING NO. CTS-122

REVISION NO.

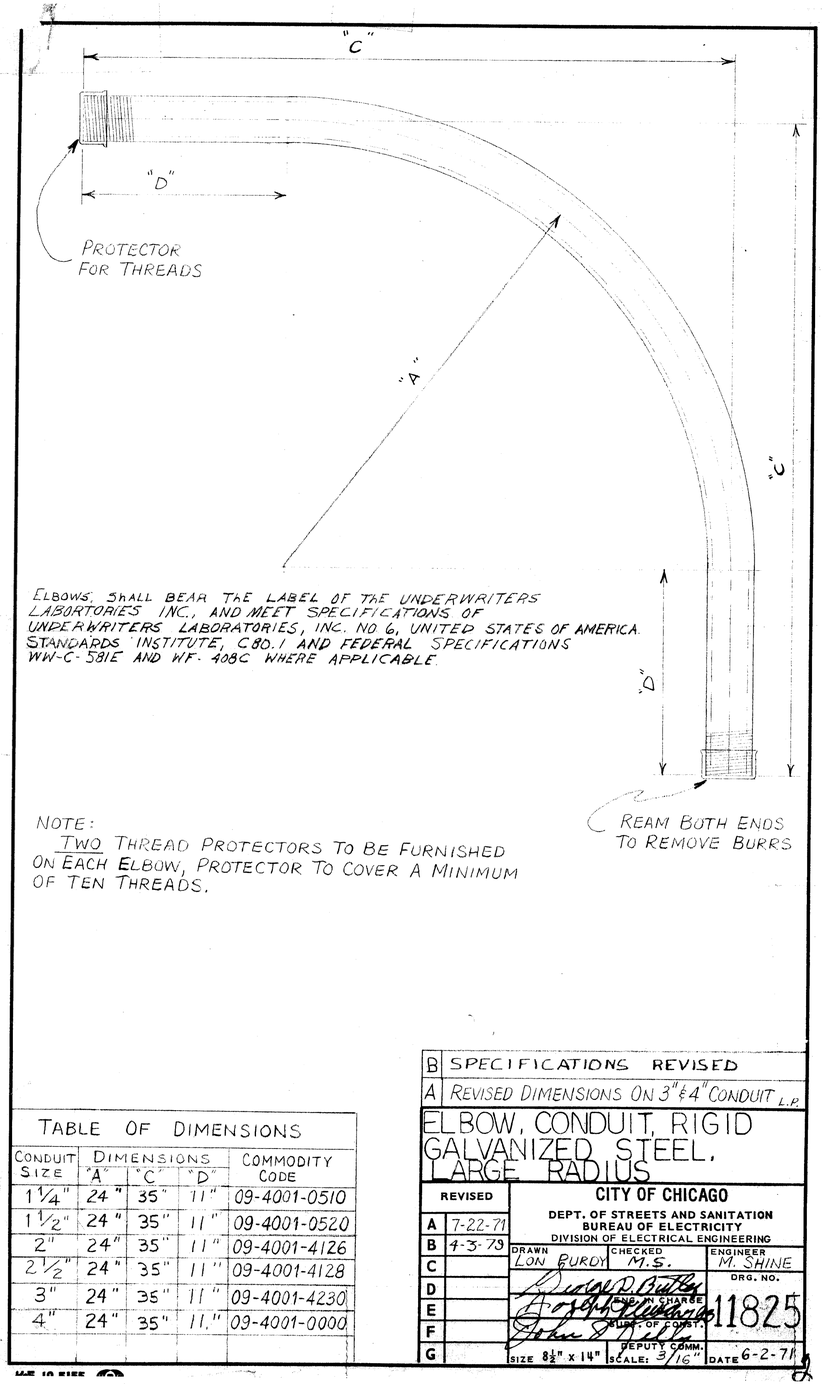

ELBOWS SHALL BEAR THE LABEL OF THE UNDERWRITERS LABORTORIES INC., AND MEET SPECIFICATIONS OF UNDERWRITERS LABORATORIES, INC. NO. 6, UNITED STATES OF AMERICA STANDARDS INSTITUTE, C80.1 AND FEDERAL SPECIFICATIONS WW-C-581E AND WF-408C WHERE APPLICABLE.

NOTE:
TWO THREAD PROTECTORS TO BE FURNISHED ON EACH ELBOW, PROTECTOR TO COVER A MINIMUM OF TEN THREADS.

TABLE OF DIMENSIONS

CONDUIT SIZE	DIMENSIONS "A"	"C"	"D"	COMMODITY CODE
1¼"	24"	35"	11"	09-4001-0510
1½"	24"	35"	11"	09-4001-0520
2"	24"	35"	11"	09-4001-4126
2½"	24"	35"	11"	09-4001-4128
3"	24"	35"	11"	09-4001-4230
4"	24"	35"	11."	09-4001-0000

B	SPECIFICATIONS REVISED
A	REVISED DIMENSIONS ON 3" & 4" CONDUIT L.P.

ELBOW, CONDUIT, RIGID GALVANIZED STEEL, LARGE RADIUS

REVISED	
A	7-22-71
B	4-3-79
C	
D	
E	
F	
G	

CITY OF CHICAGO
DEPT. OF STREETS AND SANITATION
BUREAU OF ELECTRICITY
DIVISION OF ELECTRICAL ENGINEERING

DRAWN: LON BURDY | CHECKED: M.S. | ENGINEER: M. SHINE
ENG. IN CHARGE
SUPT. OF CONST.
DEPUTY COMM.
DRG. NO. 11825
SIZE 8½" x 14" | SCALE: 3/16" | DATE 6-2-71

BANDING FITTING FOR POLE MOUNTING JUNCTION BOX

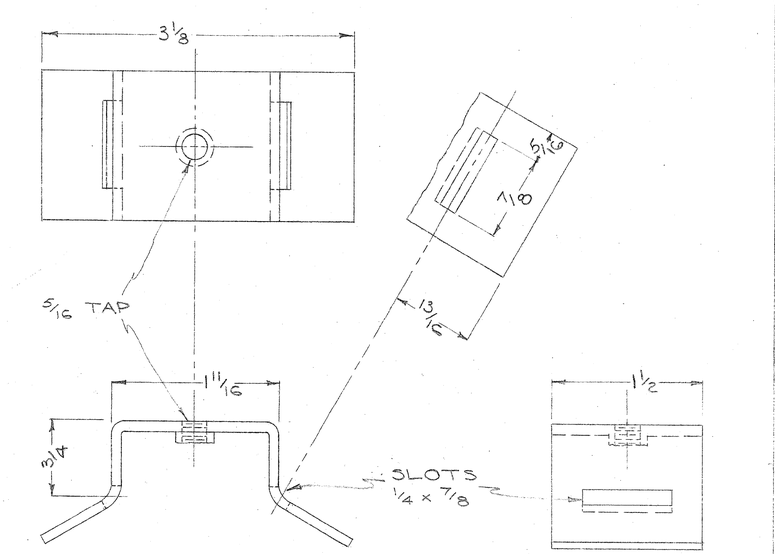

MATERIAL: STAINLESS STEEL - 4 13/16 x 1½ x 3/32

BANDING FITTING FOR POLE MOUNTING SIGNALS

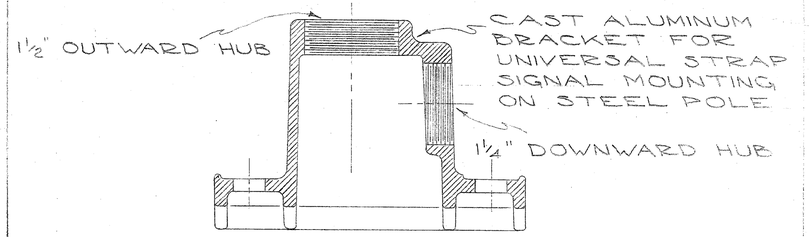

MATERIAL: CAST ALUMINUM

CROUSE HINDS
TL-3301 - WITHOUT DOWNWARD HUB
TL-3302 WITH 1¼" DOWNWARD HUB

BANDING FITTINGS FOR POLE MOUNTING TRAFFIC SIGNAL
CITY OF CHICAGO
DEPT. OF STREETS AND SANITATION
DIVISION OF ELECTRICAL ENGINEERING
DRAWN: S.NE | CHECKED | ENGINEER
ENG. IN CHARGE: Charles Manta
SUPT. OF CONST.
DEPUTY COMM.
DRG. NO. 11934
SIZE 8½ x 14" | 11-14-71

DESIGN BY:										
DRAWN BY:										
CHECKED BY:										
APPROVED BY:		4	7/3/2023	ISSUED FOR BID	BTW	BTW	MJL		
CDOT/APPROVED BY:		NO.	DATE	REVISIONS	DES.	DRW.	CHK.	DCCO	CDOT

TranSystems
TRANSYSTEMS
222 SOUTH RIVERSIDE PLAZA SUITE 610
CHICAGO, ILLINOIS 60606

SOM
SKIDMORE, OWINGS & MERRILL LLP
224 SOUTH MICHIGAN AVENUE, SUITE 1000
CHICAGO, ILLINOIS 60604

CDOT
CHICAGO DEPARTMENT OF TRANSPORTATION
DIVISION OF ENGINEERING

STATE / LAKE LOOP ELEVATED STATION
200 NORTH STATE STREET, CHICAGO, IL 60601

DEO STANDARD DRAWINGS

CDOT PROJECT D-1-209 | DATE: 7/3/2023

SPEC. NO.

DRAWING NO. CTS-123

REVISION NO.

• 7 CONDUCTOR - 7 POINT STRIP •

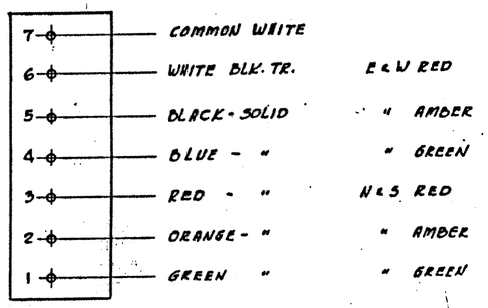

• 14 CONDUCTOR - 10 POINT STRIP •

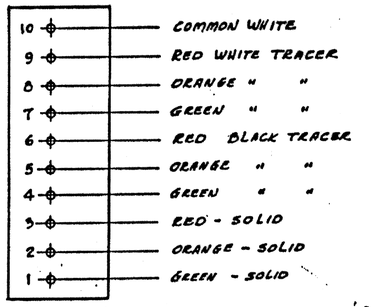

GREEN BLUE TRACER
ORANGE " "
RED " "
BLACK - SOLID
} SPLICED & TAPED

• 22 CONDUCTOR - CODE •
• 19% CODE - OMIT "19 - "21 & "22 •

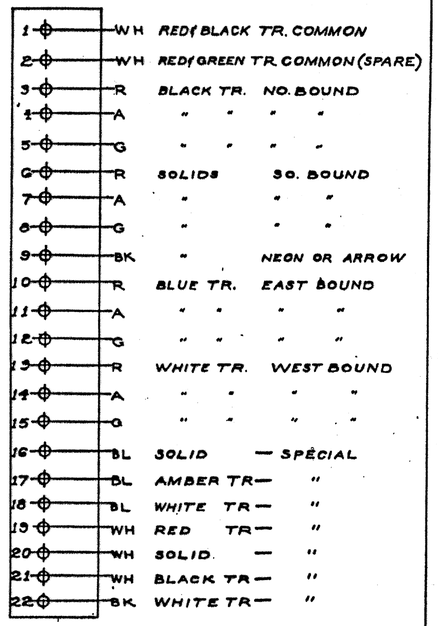

• 10 CONDUCTOR - 7 POINT STRIP •

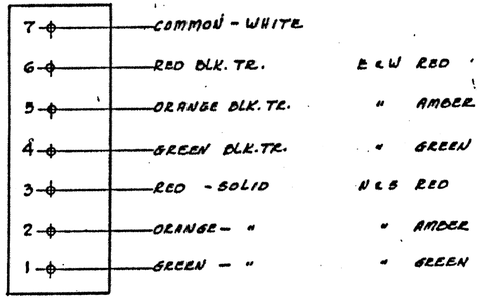

SOLID BLUE
SOLID BLACK
BLUE BLK. TR
} SPLICED & TAPED

• 14 CONDUCTOR - 14 POINT STRIP •

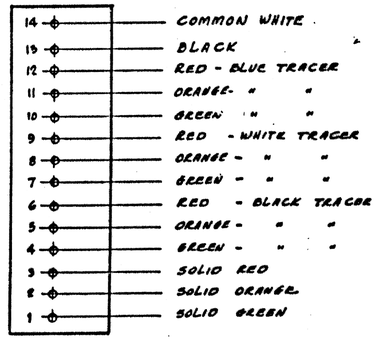

• 10 CONDUCTOR - 10 POINT STRIP •

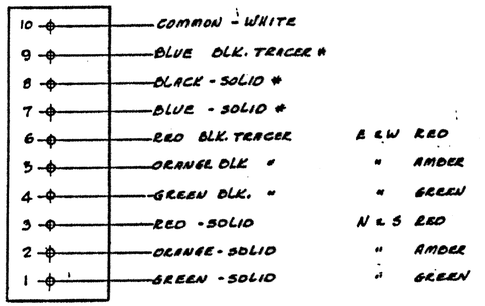

#- SOLID BLUE - GREEN LIGHT
#- SOLID BLACK - AMBER "
#- BLUE BLACK TR. RED "
} IF USED

5

• STRAIGHT CORNER •

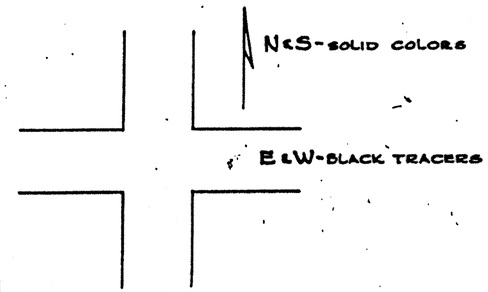

NOTE:
CONDUCTORS FOR WALK SIGNALS & VARIOUS MESSAGE SIGNS AT DISCRETION OF INSTALLER

30

• SPLIT CORNER •

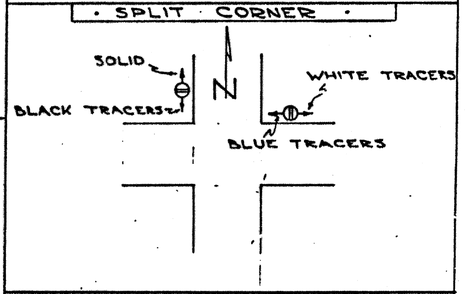

TRAFFIC CONTROL SIGNALS STRIP WIRING LAYOUT

REVISED	
A	5-4-61
B	11-10-64
C	
D	
E	
F	
G	

CITY OF CHICAGO
DEPT. OF STREETS AND SANITATION
DIVISION OF ELECTRICAL OPERATION

DRAWN: K.R.G. | CHECKED: [signature] | ENGINEER: C.C. Bubley
ENGINEER OF TRAFFIC CONTROL: [signature]
SUPERINTENDENT
COMMISSIONER
DR.G. NO. 12268-A
SIZE 16"x21" | DATE 11-8-56

DESIGN BY:										
DRAWN BY:										
CHECKED BY:										
APPROVED BY:		4	7/3/2023	ISSUED FOR BID	BTW	BTW	MJL			
CDOT/APPROVED BY:		NO.	DATE	REVISIONS	DES.	DRW.	CHK.	DCCO	CDOT	

TranSystems
TRANSYSTEMS
222 SOUTH RIVERSIDE PLAZA SUITE 610
CHICAGO, ILLINOIS 60606

SOM
SKIDMORE, OWINGS & MERRILL LLP
224 SOUTH MICHIGAN AVENUE, SUITE 1000
CHICAGO, ILLINOIS 60604

CDOT
CHICAGO DEPARTMENT OF TRANSPORTATION
DIVISION OF ENGINEERING

STATE / LAKE LOOP ELEVATED STATION
200 NORTH STATE STREET, CHICAGO, IL 60601

DEO STANDARD DRAWINGS

CDOT PROJECT D-1-209 | DATE: 7/3/2023

SPEC. NO.

DRAWING NO. CTS-124

REVISION NO.

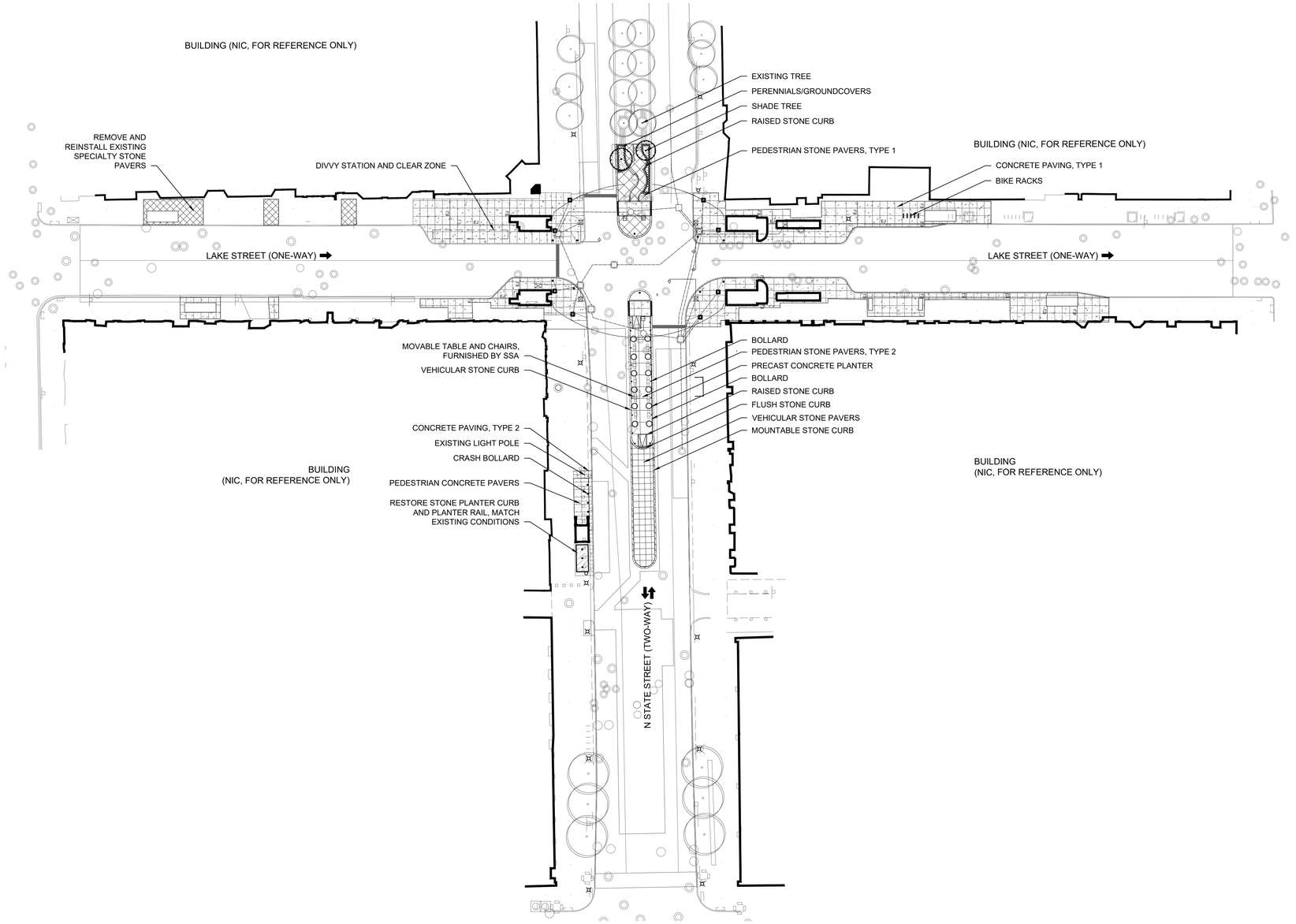

LEGEND

- CONCRETE PAVING, TYPE 1 AND 2, SEE SCHEDULE AND ENLARGEMENT PLANS FOR FINISH
- PEDESTRIAN CONCRETE PAVERS
- PEDESTRIAN STONE PAVERS, TYPE 1
- PEDESTRIAN STONE PAVERS, TYPE 2
- VEHICULAR STONE PAVERS
- REINSTALL EXISTING SPECIALTY STONE PAVERS
- RAISED STONE CURB AND WALLS
- VEHICULAR STONE CURB
- MOUNTABLE STONE CURB
- FLUSH STONE CURB
- SURFACE MOUNT PLANTERS
- CRASH BOLLARD
- LIGHT BOLLARD
- MOVABLE TABLE AND CHAIRS - FURNISHED BY SSA
- BIKE RACKS
- DIVVY STATION AND CLEAR ZONE - 30' LONG
- EXISTING TREE
- SHADE TREE
- PERENNIALS/ GROUND COVER
- EXPANSION JOINT
- CONTROL JOINT

NOTES:
1. COORDINATE LIMITS OF SIDEWALK WITH CIVIL DRAWINGS. WHEREVER POSSIBLE, ALIGN CONCRETE JOINTING WITH EXISTING JOINTING.

1 OVERALL SITE PLAN
1" = 40'-0"

0 20 40 60 80'

DESIGN BY:									
DRAWN BY:									
CHECKED BY:		4	7/3/2023	ISSUED FOR BID	BK	SG	BK		
APPROVED BY:		0	9/9/2022	ISSUED FOR PERMIT	CR	JT	BK		
CDOT/APPROVED BY:		NO.	DATE	REVISIONS	DES.	DRW.	CHK.	DCCO	CDOT

TRANSYSTEMS
222 SOUTH RIVERSIDE PLAZA SUITE 610
CHICAGO, ILLINOIS 60606

SITE DESIGN GROUP, LTD
888 SOUTH MICHIGAN AVENUE, SUITE P1
CHICAGO, ILLINOIS 60605

LICENSED LANDSCAPE ARCHITECT
BRADLEY C. McCAULEY
157001466
STATE OF ILLINOIS

CHICAGO DEPARTMENT OF TRANSPORTATION
DIVISION OF ENGINEERING

STATE / LAKE LOOP ELEVATED STATION
200 NORTH STATE STREET, CHICAGO, IL 60601

SPEC. NO.

LANDSCAPE SITE PLAN

DRAWING NO. **L-101**

CDOT PROJECT D-1-209 | DATE: 9/9/2022 | REVISION NO.

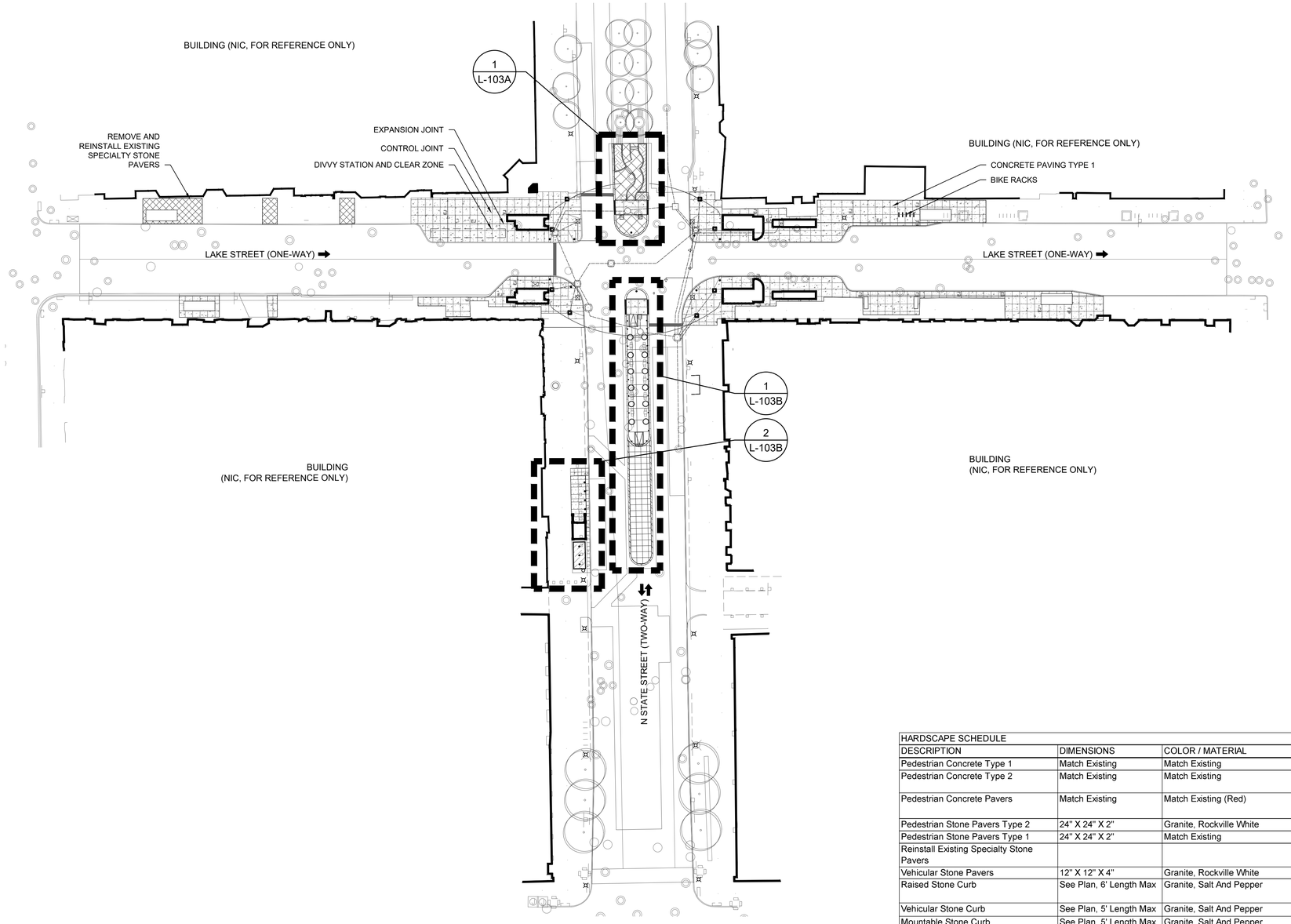

LEGEND

- CONCRETE PAVING, TYPE 1 AND 2, SEE SCHEDULE AND ENLARGEMENT PLANS FOR FINISH
- CRASH BOLLARD
- BIKE RACKS
- DIVVY STATION AND CLEAR ZONE - 30' LONG
- EXPANSION JOINT
- CONTROL JOINT

NOTE:
1. IF SALVAGED PAVERS ARE INSUFFICIENT TO FILL THE SIDEWALK AREA, THE CONTRACTOR MUST SUPPLY REPLACEMENT GRANITE PAVERS MATCHING THE TYPE, SIZE, FINISH, AND COLOR OF THE EXISTING PAVERS.

HARDSCAPE SCHEDULE

DESCRIPTION	DIMENSIONS	COLOR / MATERIAL	MANUFACTURER	LOCATION	REMARKS
Pedestrian Concrete Type 1	Match Existing	Match Existing		Lake Street	Finish: Light Broom Finish
Pedestrian Concrete Type 2	Match Existing	Match Existing		State Street West Side	Finish: Rubbed/Smooth
Pedestrian Concrete Pavers	Match Existing	Match Existing (Red)		State Street West Side	Finish: Exposed Aggregate, Jointing Material: Match Existing
Pedestrian Stone Pavers Type 2	24" X 24" X 2"	Granite, Rockville White	Coldspring	State Street South Median	Finish: Thermal, Jointing Material: Mortar
Pedestrian Stone Pavers Type 1	24" X 24" X 2"	Match Existing		State Street North Median	Finish: Match Existing, Jointing Material: Match Existing
Reinstall Existing Specialty Stone Pavers				State Street	Remove And Reinstall, Replace Any Damage Pavers In Kind To Existing Along Lake Street
Vehicular Stone Pavers	12" X 12" X 4"	Granite, Rockville White	Coldspring	State Street South Median	Finish: Thermal, Jointing Material: Match Existing
Raised Stone Curb	See Plan, 6' Length Max	Granite, Salt And Pepper	Coldspring	State Street Medians	Finish: Match Existing Granite Curb, Jointing Material: Mortar
Vehicular Stone Curb	See Plan, 5' Length Max	Granite, Salt And Pepper	Coldspring	State Street Medians	Finish: Match Existing Granite Curb, Jointing Material: Mortar
Mountable Stone Curb	See Plan, 5' Length Max	Granite, Salt And Pepper	Coldspring	State Street South Median	Finish: Match Existing Granite Curb, Jointing Material: Mortar
Flush Stone Curb	See Plan, 6' Length Max	Granite, Salt And Pepper	Coldspring	State Street Medians	Finish: Match Existing Granite Curb, Jointing Material: Mortar
Stone Stair	See Plan, 5' Length Max	Granite, Salt And Pepper	Coldspring	State Street North Median	Finish: Thermal, Jointing Material: Match Existing

1 OVERALL SITE PLAN
1" = 40'-0"

0 20 40 60 80'

DESIGN BY:										
DRAWN BY:										
CHECKED BY:		4	7/3/2023	ISSUED FOR BID	BK	SG	BK			
APPROVED BY:		0	9/9/2022	ISSUED FOR PERMIT	CR	JT	BK			
CDOT/APPROVED BY:		NO.	DATE	REVISIONS	DES.	DRW.	CHK.	DCCO	CDOT	

TRANSYSTEMS
222 SOUTH RIVERSIDE PLAZA SUITE 610
CHICAGO, ILLINOIS 60606

SITE DESIGN GROUP, LTD
888 SOUTH MICHIGAN AVENUE, SUITE P1
CHICAGO, ILLINOIS 60605

LICENSED LANDSCAPE ARCHITECT
BRADLEY C. McCAULEY
157001466
STATE OF ILLINOIS

CHICAGO DEPARTMENT OF TRANSPORTATION
DIVISION OF ENGINEERING

STATE / LAKE LOOP ELEVATED STATION
200 NORTH STATE STREET, CHICAGO, IL 60601

HARDSCAPE PLAN

CDOT PROJECT D-1-209

DATE: 9/9/2022

SPEC. NO.

DRAWING NO. **L-103**

REVISION NO.

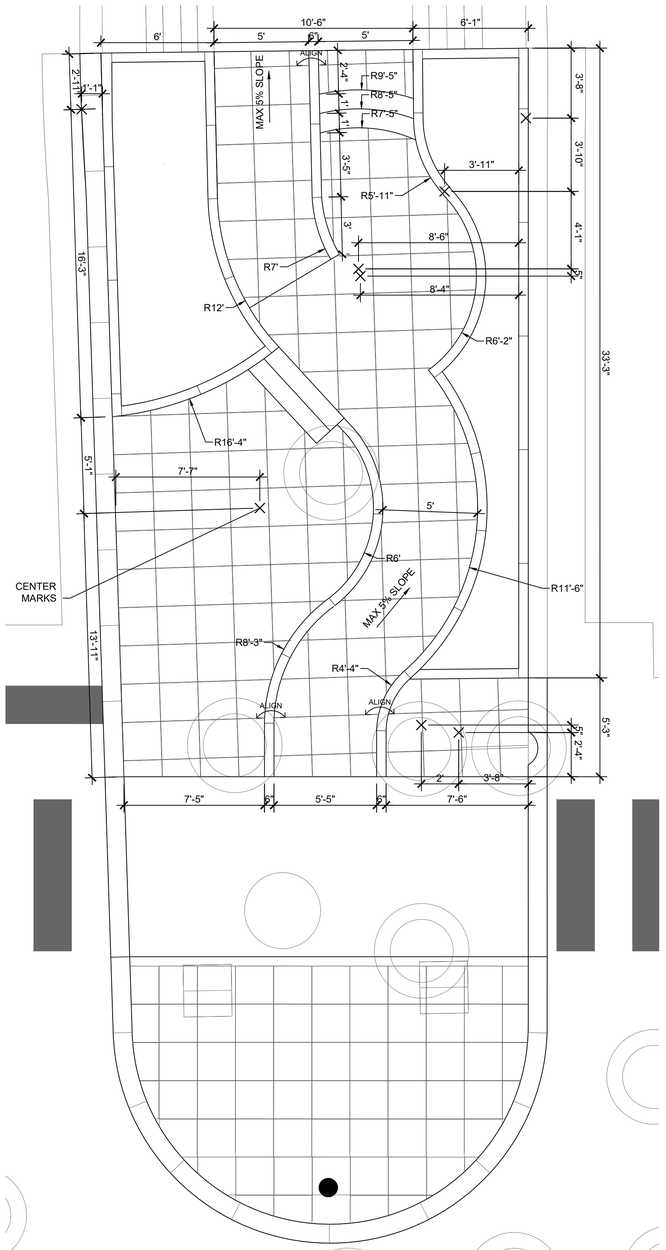

1 HARDSCAPE GEOMETRY PLAN ENLARGEMENT
1/4" = 1'-0"

0 2 4 6 8'

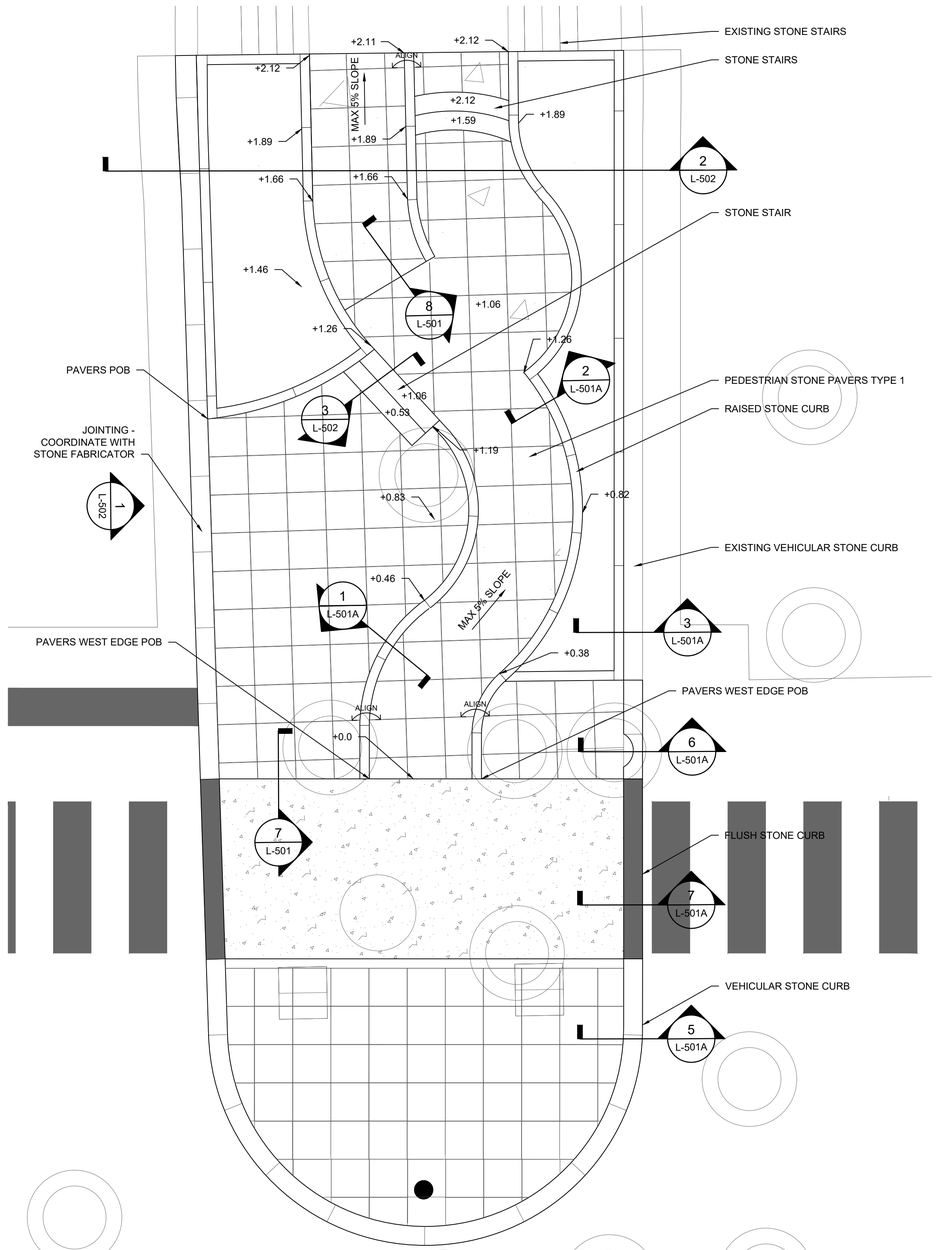

2 HARDSCAPE GEOMETRY PLAN ENLARGEMENT
1/4" = 1'-0"

0 2 4 6 8'

LEGEND

- RAISED STONE CURB AND WALLS
- VEHICULAR STONE CURB - REMOVE EXISTING AND REINSTALL. REPLACE ANY DAMAGED CURBS IN KIND.
- FLUSH STONE CURB
- CRASH BOLLARD
- CENTER MARK OF ARC

DESIGN BY:									
DRAWN BY:									
CHECKED BY:		4	7/3/2023	ISSUED FOR BID	BK	SG	BK		
APPROVED BY:		0	9/9/2022	ISSUED FOR PERMIT	CR	JT	BK		
CDOT/APPROVED BY:		NO.	DATE	REVISIONS	DES.	DRW.	CHK.	DCCO	CDOT

TRANSYSTEMS
222 SOUTH RIVERSIDE PLAZA SUITE 610
CHICAGO, ILLINOIS 60606

SITE DESIGN GROUP, LTD
888 SOUTH MICHIGAN AVENUE, SUITE P1
CHICAGO, ILLINOIS 60605

LICENSED LANDSCAPE ARCHITECT
BRADLEY C. McCAULEY
157001466
STATE OF ILLINOIS

CHICAGO DEPARTMENT OF TRANSPORTATION
DIVISION OF ENGINEERING

STATE / LAKE LOOP ELEVATED STATION
200 NORTH STATE STREET, CHICAGO, IL 60601

HARDSCAPE NORTH GATEWAY PLAZA ENLARGEMENT

CDOT PROJECT D-1-209 | DATE: 9/9/2022

SPEC. NO.

DRAWING NO. **L-103A**

REVISION NO.

HARDSCAPE SCHEDULE					
DESCRIPTION	DIMENSIONS	COLOR / MATERIAL	MANUFACTURER	LOCATION	REMARKS
Pedestrian Concrete Type 1	Match Existing	Match Existing		Lake Street	Finish: Light Broom Finish
Pedestrian Concrete Type 2	Match Existing	Match Existing		State Street West Side	Finish: Rubbed/Smooth
Pedestrian Concrete Pavers	Match Existing	Match Existing (Red)		State Street West Side	Finish: Exposed Aggregate, Jointing Material: Match Existing
Pedestrian Stone Pavers Type 2	24" X 24" X 2"	Granite, Rockville White	Coldspring	State Street South Median	Finish: Thermal, Jointing Material: Mortar
Pedestrian Stone Pavers Type 1	24" X 24" X 2"	Match Existing		State Street North Median	Finish: Match Existing, Jointing Material: Match Existing
Reinstall Existing Specialty Stone Pavers				State Street	Remove And Reinstall, Replace Any Damage Pavers In Kind To Existing Along Lake Street
Vehicular Stone Pavers	12" X 12" X 4"	Granite, Rockville White	Coldspring	State Street South Median	Finish: Thermal, Jointing Material: Match Existing
Raised Stone Curb	See Plan, 6' Length Max	Granite, Salt And Pepper	Coldspring	State Street Medians	Finish: Match Existing Granite Curb, Jointing Material: Mortar
Vehicular Stone Curb	See Plan, 5' Length Max	Granite, Salt And Pepper	Coldspring	State Street Medians	Finish: Match Existing Granite Curb, Jointing Material: Mortar
Mountable Stone Curb	See Plan, 5' Length Max	Granite, Salt And Pepper	Coldspring	State Street South Median	Finish: Match Existing Granite Curb, Jointing Material: Mortar
Flush Stone Curb	See Plan, 6' Length Max	Granite, Salt And Pepper	Coldspring	State Street Medians	Finish: Match Existing Granite Curb, Jointing Material: Mortar
Stone Stair	See Plan, 5' Length Max	Granite, Salt And Pepper	Coldspring	State Street North Median	Finish: Thermal, Jointing Material: Match Existing

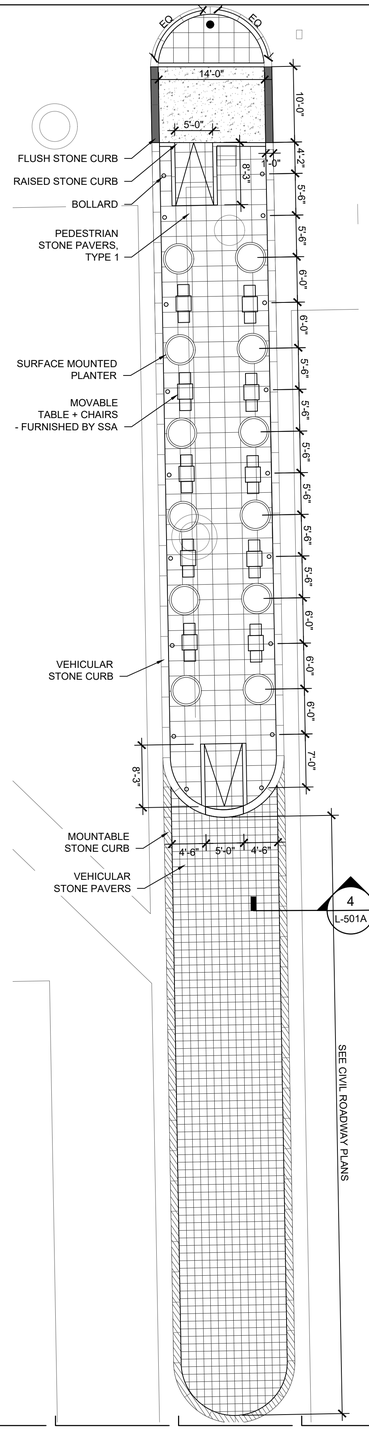

1 SOUTH MEDIAN ENLARGEMENT PLAN
1" = 10'-0"

0 2 4 6 8'

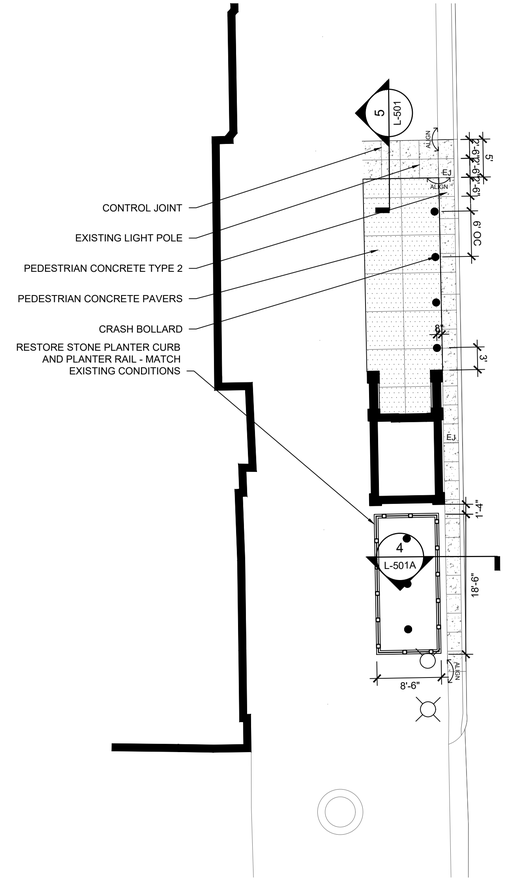

2 SOUTHWEST ENLARGEMENT PLAN
1' = 10'-0"

0 2 4 6 8'

LEGEND

- CONCRETE PAVING
- PEDESTRIAN CONCRETE PAVERS
- PEDESTRIAN STONE PAVERS, TYPE 2
- VEHICULAR STONE PAVERS
- RAISED STONE CURB AND WALLS
- VEHICULAR STONE CURB
- MOUNTABLE STONE CURB
- FLUSH STONE CURB
- EJ — EXPANSION JOINT
- CONTROL JOINT
- SURFACE MOUNT PLANTERS
- CRASH BOLLARD
- BOLLARD
- MOVABLE TABLE AND CHAIRS - FURNISHED BY SSA

DESIGN BY:										
DRAWN BY:										
CHECKED BY:		4	7/3/2023	ISSUED FOR BID	BK	SG	BK			
APPROVED BY:		0	9/9/2022	ISSUED FOR PERMIT	CR	JT	BK			
CDOT/APPROVED BY:		NO.	DATE	REVISIONS	DES.	DRW.	CHK.	DCCO	CDOT	

TRANSYSTEMS
222 SOUTH RIVERSIDE PLAZA SUITE 610
CHICAGO, ILLINOIS 60606

SITE DESIGN GROUP, LTD
888 SOUTH MICHIGAN AVENUE, SUITE P1
CHICAGO, ILLINOIS 60605

BRADLEY C. McCAULEY
157001466
LICENSED LANDSCAPE ARCHITECT
STATE OF ILLINOIS

CHICAGO DEPARTMENT OF TRANSPORTATION
DIVISION OF ENGINEERING

STATE / LAKE LOOP ELEVATED STATION
200 NORTH STATE STREET, CHICAGO, IL 60601

HARDSCAPE SOUTH MEDIAN ENLARGEMENT

CDOT PROJECT D-1-209 | DATE: 9/9/2022

SPEC. NO.

DRAWING NO. **L-103B**

REVISION NO.

PLANT SCHEDULE						
CODE	QTY	BOTANICAL NAME	COMMON NAME	ROOT	SIZE	REMARKS
SHADE TREES						
GL.TR	2	*Gleditsia Tricanthos 'Shademaster'*	Honey Locust	B&B	2.5" cal	matching heads
PERENNIALS, GROUNDCOVER, AND GRASSES MIXES						
PA.TR	194 SQFT	*Pachysandra Treminalis*	Japanese Pachysandra		4" plug	12" o.c

LEGEND

SHADE TREE

PERENNIALS/ GROUNDCOVER

ANNUALS

NOTE
1. ANNUAL SELECTION SHALL BE COORDINATED WITH CENTRAL LOOP ALLIANCE PRIOR TO PURCHASE

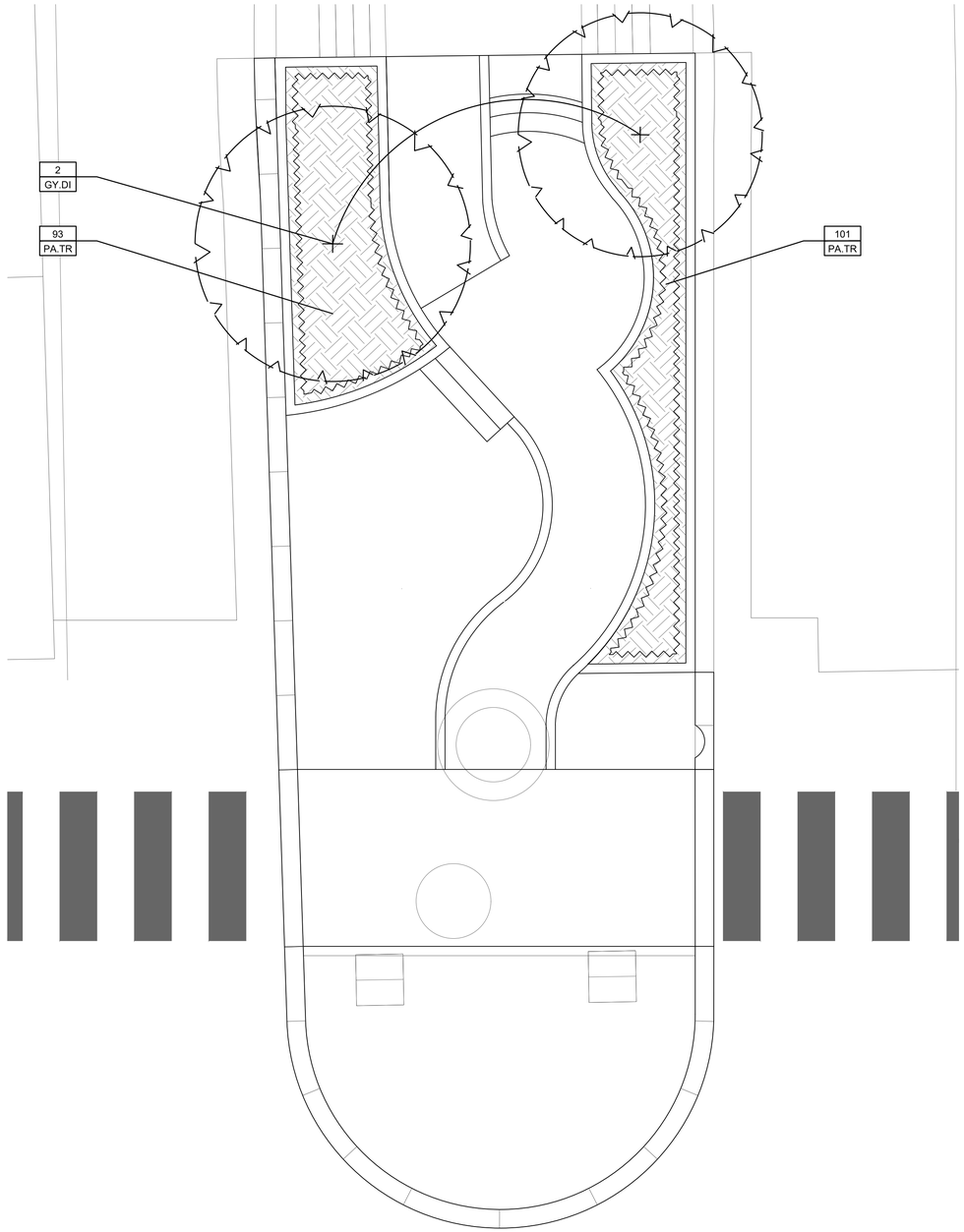

1 PLANTING PLAN ENLARGEMENT - NORTH
1/4" = 1'-0"

0 2 4 6 8'

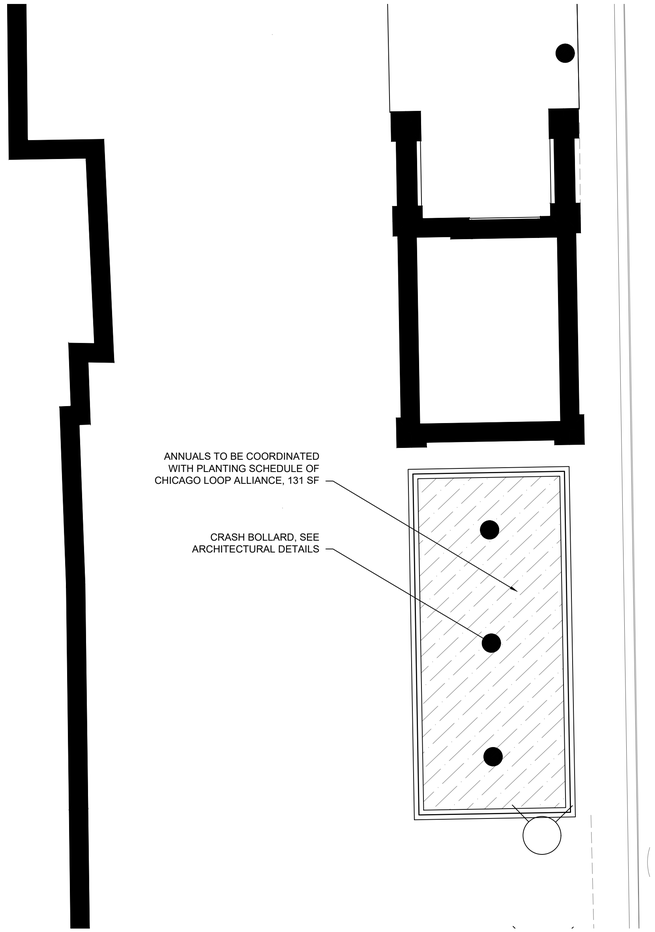

2 PLANTING PLAN ENLARGEMENT - SOUTHWEST
1/4" = 1'-0"

0 2 4 6 8'

DESIGN BY:										
DRAWN BY:										
CHECKED BY:		4	7/3/2023	ISSUED FOR BID	BK	SG	BK		
APPROVED BY:		0	9/9/2022	ISSUED FOR PERMIT	CR	JT	BK		
CDOT/APPROVED BY:		NO.	DATE	REVISIONS	DES.	DRW.	CHK.	DCCO	CDOT

TRANSYSTEMS
222 SOUTH RIVERSIDE PLAZA SUITE 610
CHICAGO, ILLINOIS 60606

SITE DESIGN GROUP, LTD
888 SOUTH MICHIGAN AVENUE, SUITE P1
CHICAGO, ILLINOIS 60605

LICENSED LANDSCAPE ARCHITECT
BRADLEY C. McCAULEY
157001466
STATE OF ILLINOIS

CHICAGO DEPARTMENT OF TRANSPORTATION
DIVISION OF ENGINEERING

STATE / LAKE LOOP ELEVATED STATION
200 NORTH STATE STREET, CHICAGO, IL 60601

PLANTING PLANS - ENLARGEMENTS

CDOT PROJECT D-1-209 | DATE: 9/9/2022

SPEC. NO.

DRAWING NO. **L-106**

REVISION NO.

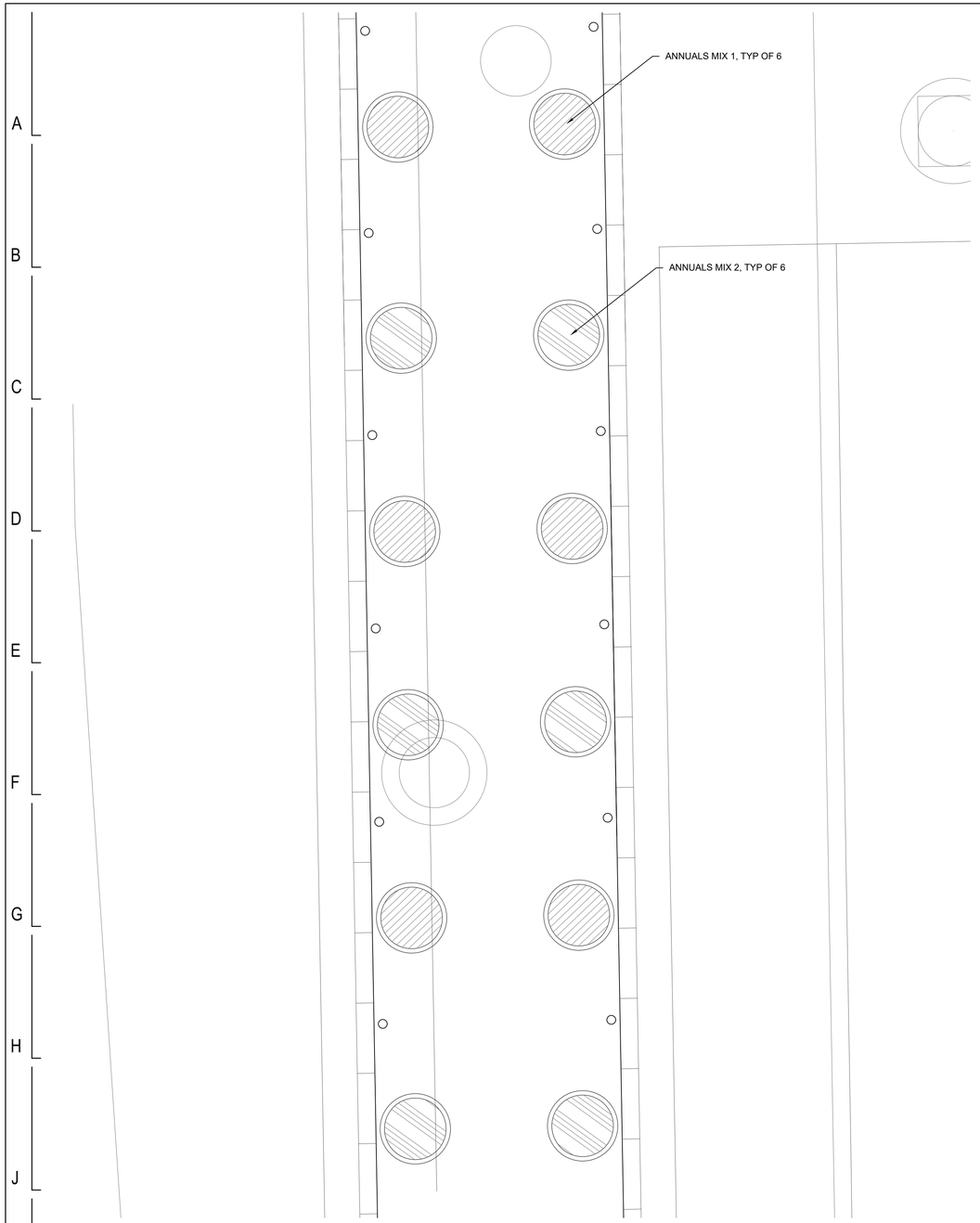

PLANT SCHEDULE						
CODE	QTY	BOTANICAL NAME	COMMON NAME	ROOT	SIZE	REMARKS
ANNUALS						
AS.DE	36	*Asparagus densiflorus 'Myers'*	Foxtail Fern		1 gal cont.	10" o.c
AL.RS	18	*Alocasia 'Regal Shields'*	Regal Shields Elephant Ear		10" cont.	12" o.c
BE.BW	60	*Begonia 'Big White w/ Green Leaf'*	Big White Begonia		6" cont.	10" o.c
CA.SB	36	*Caladium 'Summer Breeze'*	Summer Breeze Angel Wings		6" cont.	10" o.c
CO.FR	18	*Cordyline fruticosa 'Exotica Tricolor'*	Exotica Tricolor Hawaiian Ti		10" cont.	12" o.c
CO.UT	60	*Coleus 'Under The Sea Bonefish'*	Under The Sea Bonefish Coleus		4.5" cont.	6" o.c
HE.AL	156	*Hedera algeriensis*	Algerian Ivy		4.5" cont.	6" o.c

NOTE
1. ANNUAL SELECTION SHALL BE COORDINATED WITH CENTRAL LOOP ALLIANCE PRIOR TO PURCHASE

ANNUALS MIX 1

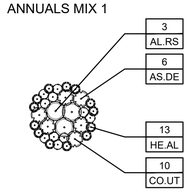

ANNUALS MIX 2

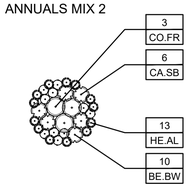

LEGEND

PERENNIALS/ GROUNDCOVER

ANNUALS MIX 1

ANNUALS MIX 2

1 PLANTING PLAN ENLARGEMENT - SOUTH
1/4" = 1'-0"

0 2 4 6 8'

DESIGN BY:									
DRAWN BY:									
CHECKED BY:		4	7/3/2023	ISSUED FOR BID	BK	SG	BK		
APPROVED BY:		0	9/9/2022	ISSUED FOR PERMIT	CR	JT	BK		
CDOT/APPROVED BY:		NO.	DATE	REVISIONS	DES.	DRW.	CHK.	DCCO	CDOT

TRANSYSTEMS
222 SOUTH RIVERSIDE PLAZA SUITE 610
CHICAGO, ILLINOIS 60606

SITE DESIGN GROUP, LTD
888 SOUTH MICHIGAN AVENUE, SUITE P1
CHICAGO, ILLINOIS 60605

LICENSED LANDSCAPE ARCHITECT
BRADLEY C. McCAULEY
157001466
STATE OF ILLINOIS

CHICAGO DEPARTMENT OF TRANSPORTATION
DIVISION OF ENGINEERING

STATE / LAKE LOOP ELEVATED STATION
200 NORTH STATE STREET, CHICAGO, IL 60601

SPEC. NO.

PLANTING PLANS - ENLARGEMENTS

DRAWING NO. **L-106A**

CDOT PROJECT D-1-209 | DATE: 9/9/2022 | REVISION NO.

NOTES:
1. PROPOSED COLOR AND FINISH, SEE HARDSCAPE SCHEDULE.

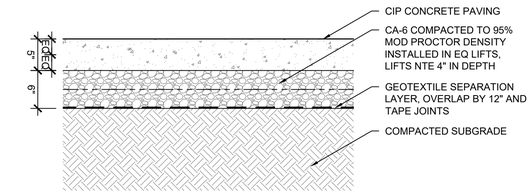

1 PEDESTRIAN CONCRETE PAVING SECTION
1" = 1'-0"

NOTES:
1. X = 1/3 OF CONCRETE PAVING DEPTH

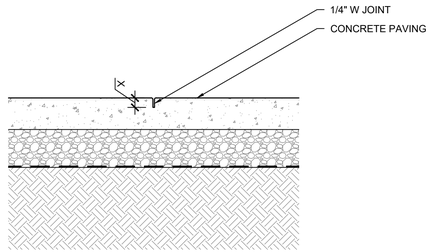

2 SAWCUT CONTROL JOINT SECTION
1" = 1'-0"

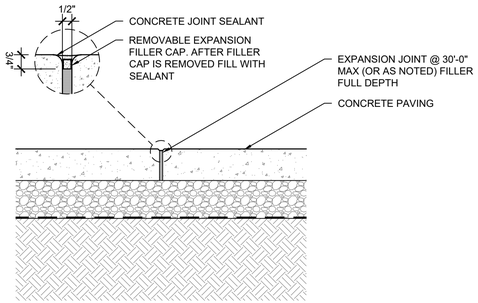

3 EXPANSION JOINT SECTION
1" = 1'-0"

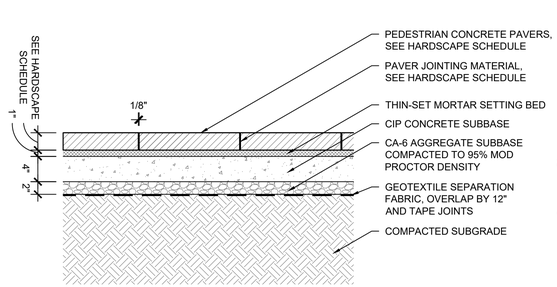

4 PEDESTRIAN CONCRETE PAVERS SECTION
1" = 1'-0"

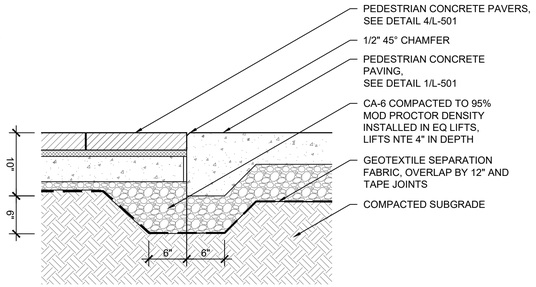

5 PEDESTRIAN CONCRETE PAVERS TO THICKENED CONCRETE EDGE SECTION
1" = 1'-0"

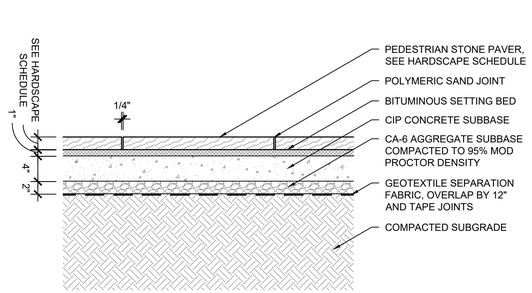

6 PEDESTRIAN STONE PAVERS SECTION
1" = 1'-0"

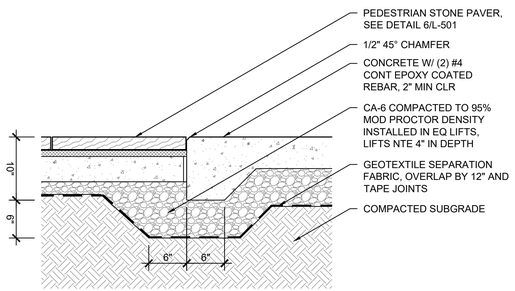

7 PEDESTRIAN STONE PAVERS TO THICKENED CONCRETE EDGE SECTION
1" = 1'-0"

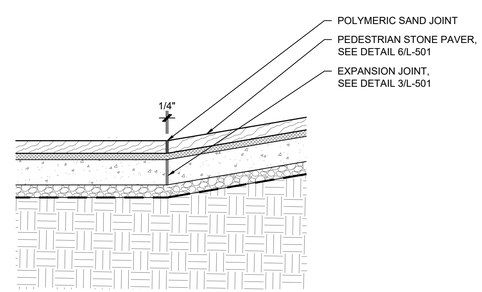

8 PEDESTRIAN STONE PAVERS AT SLOPED WALK SECTION
1" = 1'-0"

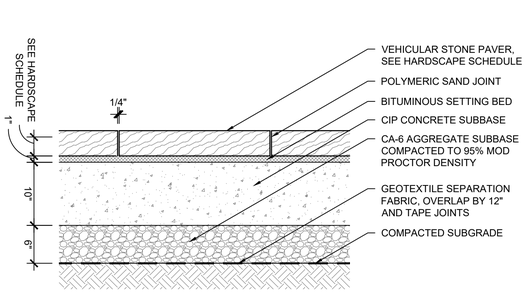

9 VEHICULAR STONE PAVERS SECTION
1" = 1'-0"

DESIGN BY:									
DRAWN BY:									
CHECKED BY:		4	7/3/2023	ISSUED FOR BID	BK	SG	BK		
APPROVED BY:		0	9/9/2022	ISSUED FOR PERMIT	CR	JT	BK		
CDOT/APPROVED BY:		NO.	DATE	REVISIONS	DES.	DRW.	CHK.	DCCO	CDOT

TRANSYSTEMS
222 SOUTH RIVERSIDE PLAZA SUITE 610
CHICAGO, ILLINOIS 60606

SITE DESIGN GROUP, LTD
888 SOUTH MICHIGAN AVENUE, SUITE P1
CHICAGO, ILLINOIS 60605

LICENSED LANDSCAPE ARCHITECT
BRADLEY C. McCAULEY
157001466
STATE OF ILLINOIS

CHICAGO DEPARTMENT OF TRANSPORTATION
DIVISION OF ENGINEERING

STATE / LAKE LOOP ELEVATED STATION
200 NORTH STATE STREET, CHICAGO, IL 60601

PAVING DETAILS

CDOT PROJECT D-1-209 | DATE: 9/9/2022

SPEC. NO.

DRAWING NO. L-501

REVISION NO.

NOTE: FOR TOP OF STONE CURB ELEVATIONS, SEE DETAIL 2/L-103A

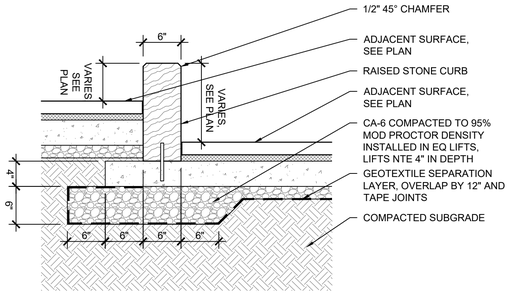

1 RAISED STONE CURB TO PEDESTRIAN PAVING SECTION
1" = 1'-0"

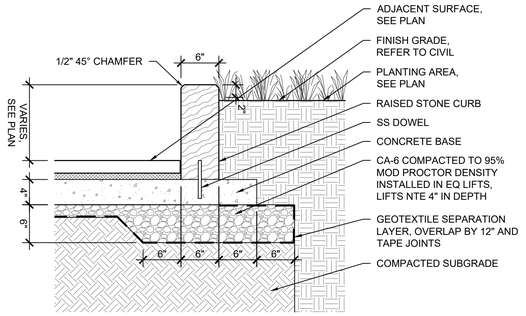

2 RAISED STONE CURB TO PLANTING AREA SECTION
1" = 1'-0"

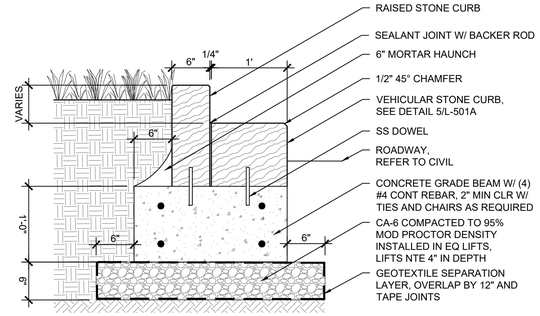

3 RAISED STONE CURB TO VEHICULAR STONE CURB SECTION
1" = 1'-0"

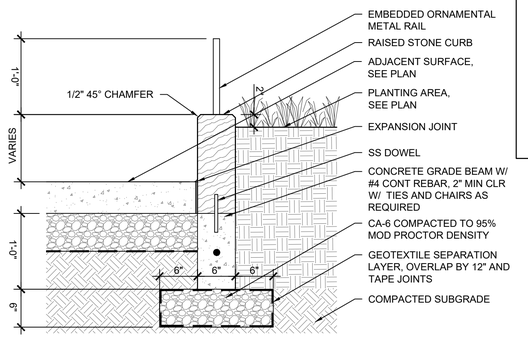

4 RAISED STONE CURB TYPE 2 W/ ORNAMENTAL METAL RAIL SECTION
1" = 1'-0"

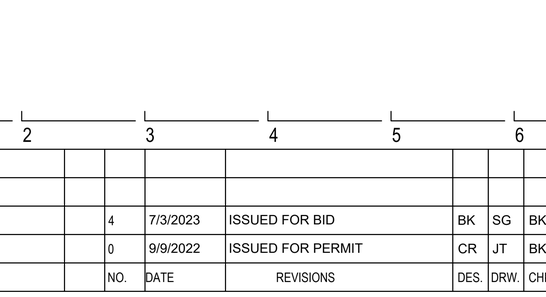

5 VEHICULAR STONE CURB SECTION
1" = 1'-0"

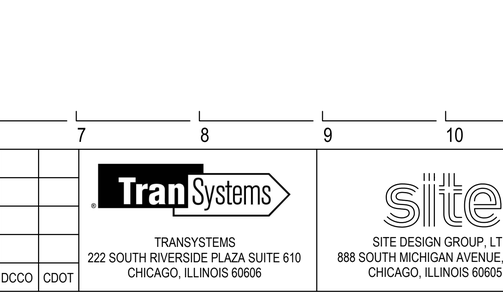

6 VEHICULAR STONE CURB AT UTILITY STRUCTURE SECTION
1" = 1'-0"

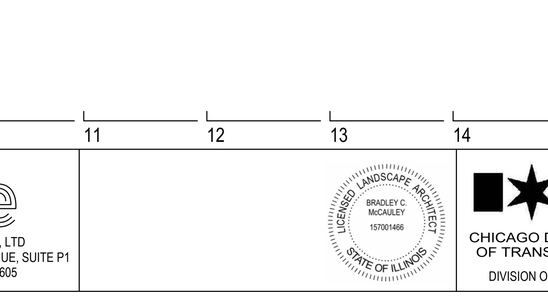

7 FLUSH STONE CURB SECTION
1" = 1'-0"

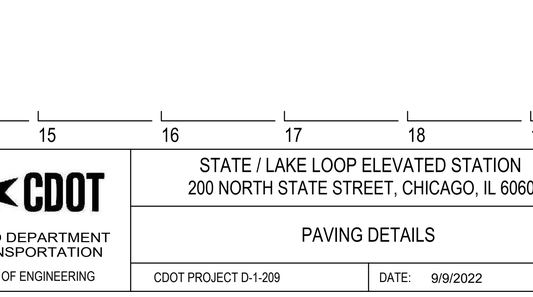

8 MOUNTABLE STONE CURB SECTION
1" = 1'-0"

DESIGN BY:										
DRAWN BY:										
CHECKED BY:		4	7/3/2023	ISSUED FOR BID	BK	SG	BK		
APPROVED BY:		0	9/9/2022	ISSUED FOR PERMIT	CR	JT	BK		
CDOT/APPROVED BY:		NO.	DATE	REVISIONS	DES.	DRW.	CHK.	DCCO	CDOT

TRANSYSTEMS
222 SOUTH RIVERSIDE PLAZA SUITE 610
CHICAGO, ILLINOIS 60606

SITE DESIGN GROUP, LTD
888 SOUTH MICHIGAN AVENUE, SUITE P1
CHICAGO, ILLINOIS 60605

LICENSED LANDSCAPE ARCHITECT
BRADLEY C. McCAULEY
157001466
STATE OF ILLINOIS

CHICAGO DEPARTMENT OF TRANSPORTATION
DIVISION OF ENGINEERING

STATE / LAKE LOOP ELEVATED STATION
200 NORTH STATE STREET, CHICAGO, IL 60601

PAVING DETAILS

CDOT PROJECT D-1-209 | DATE: 9/9/2022

SPEC. NO.

DRAWING NO. **L-501A**

REVISION NO.

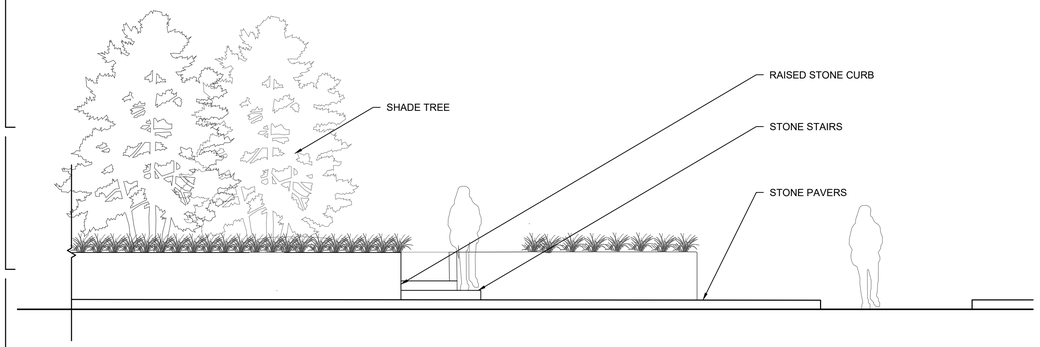

1 GATEWAY PLAZA WEST ELEVATION

1/4" = 1'-0"

0 2 4 6 8'

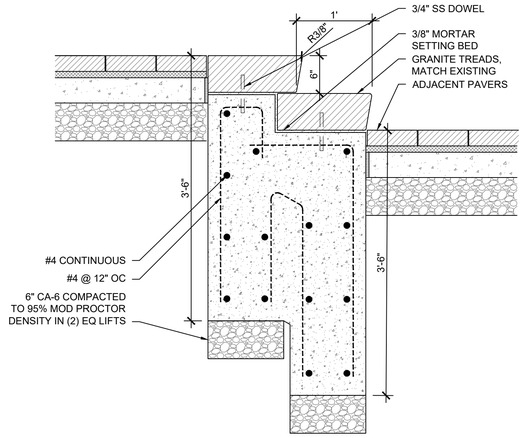

3 STONE STAIR SECTION

1" = 1'-0"

0 1 2'

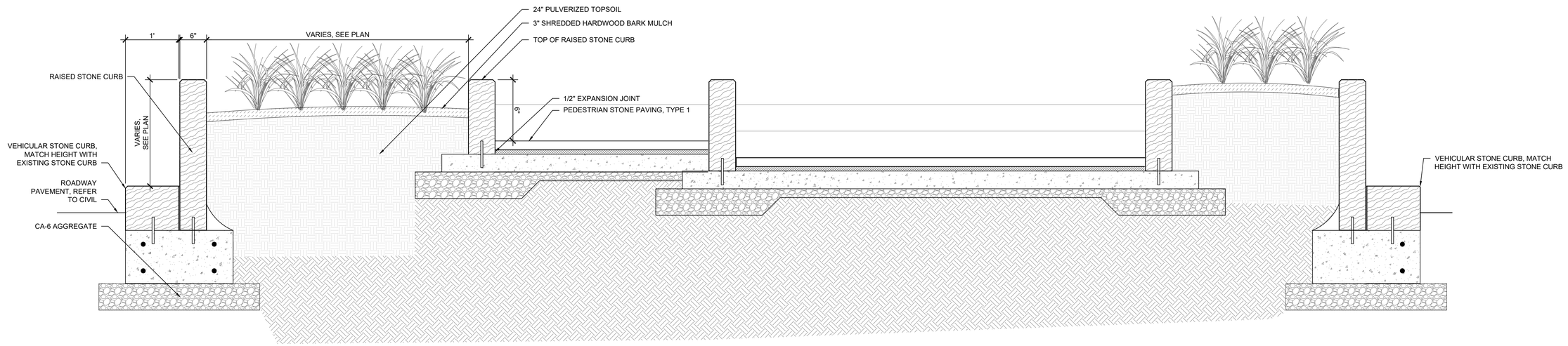

2 PLANTER SECTION

NTS

DESIGN BY:										
DRAWN BY:										
CHECKED BY:		4	7/3/2023	ISSUED FOR BID	BK	SG	BK		
APPROVED BY:		0	9/9/2022	ISSUED FOR PERMIT	CR	JT	BK		
CDOT/APPROVED BY:		NO.	DATE	REVISIONS	DES.	DRW.	CHK.	DCCO	CDOT

TRANSYSTEMS
222 SOUTH RIVERSIDE PLAZA SUITE 610
CHICAGO, ILLINOIS 60606

SITE DESIGN GROUP, LTD
888 SOUTH MICHIGAN AVENUE, SUITE P1
CHICAGO, ILLINOIS 60605

LICENSED LANDSCAPE ARCHITECT
BRADLEY C. McCAULEY
157001466
STATE OF ILLINOIS

CHICAGO DEPARTMENT OF TRANSPORTATION
DIVISION OF ENGINEERING

STATE / LAKE LOOP ELEVATED STATION
200 NORTH STATE STREET, CHICAGO, IL 60601

GATEWAY PLAZA DETAILS

CDOT PROJECT D-1-209 | DATE: 9/9/2022

SPEC. NO.

DRAWING NO. **L-502**

REVISION NO.

1 GATEWAY MEDIAN PERSPECTIVE - VIEW NORTHEAST
NTS

2 GATEWAY MEDIAN PERSPECTIVE - VIEW NORTH
NTS

3 GATEWAY MEDIAN PERSPECTIVE - BIRDSEYE VIEW NORTH
NTS

4 GATEWAY MEDIAN PERSPECTIVE - VIEW SOUTHEAST
NTS

NOTES:
IMAGES ARE SHOWN FOR REFERENCE AND DO NOT OVERRIDE THE CONSTRUCTION DOCUMENT PLANS AND DETAILS.
SEE PAVING PLANS FOR PAVER SIZE AND PATTERN.
SEE HARDSCAPE SCHEDULE FOR GRANITE STONE SELECTIONS
SEE PLANTING PLANS FOR PLANTING DESIGN

DESIGN BY:									
DRAWN BY:									
CHECKED BY:		4	7/3/2023	ISSUED FOR BID	BK	SG	BK		
APPROVED BY:		0	9/9/2022	ISSUED FOR PERMIT	CR	JT	BK		
CDOT/APPROVED BY:		NO.	DATE	REVISIONS	DES.	DRW.	CHK.	DCCO	CDOT

TRANSYSTEMS
222 SOUTH RIVERSIDE PLAZA SUITE 610
CHICAGO, ILLINOIS 60606

SITE DESIGN GROUP, LTD
888 SOUTH MICHIGAN AVENUE, SUITE P1
CHICAGO, ILLINOIS 60605

LICENSED LANDSCAPE ARCHITECT
BRADLEY C. McCAULEY
157001466
STATE OF ILLINOIS

CHICAGO DEPARTMENT OF TRANSPORTATION
DIVISION OF ENGINEERING

STATE / LAKE LOOP ELEVATED STATION
200 NORTH STATE STREET, CHICAGO, IL 60601

SPEC. NO.

GATEWAY PLAZA PERSPECTIVES

DRAWING NO.
L-502A

CDOT PROJECT D-1-209 | DATE: 9/9/2022 | REVISION NO.

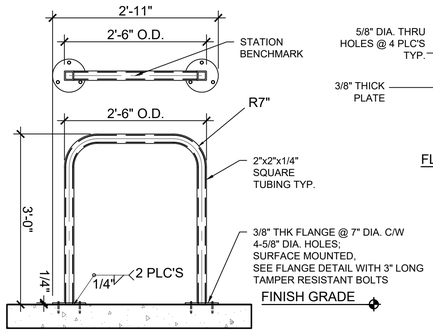

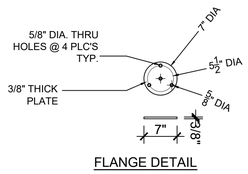

FLANGE DETAIL

NOTE:
FOR LOCATIONS SEE CIVIL PLANS

1 BIKE RACK
NTS

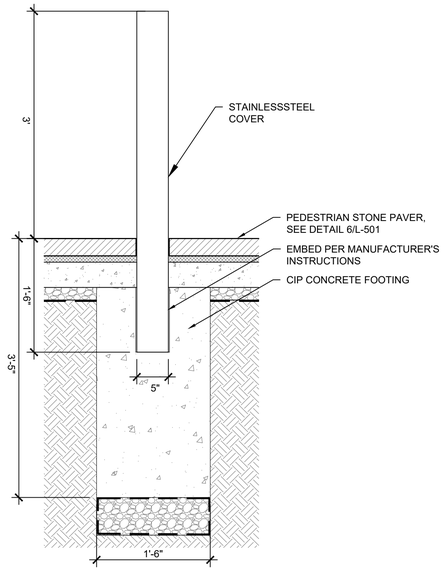

2 CRASH BOLLARD SECTION
1" = 1'-0"

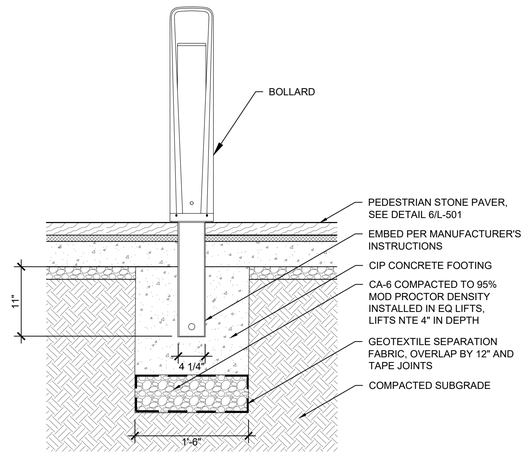

3 LIGHT BOLLARD SECTION
1" = 1'-0"

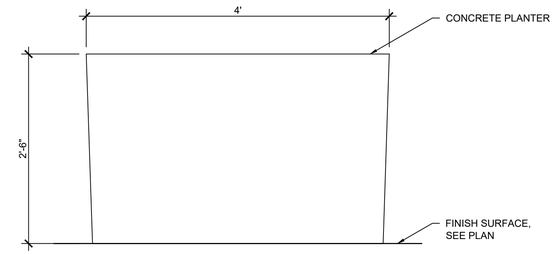

4 SURFACE MOUNTED PLANTER
1" = 1'-0"

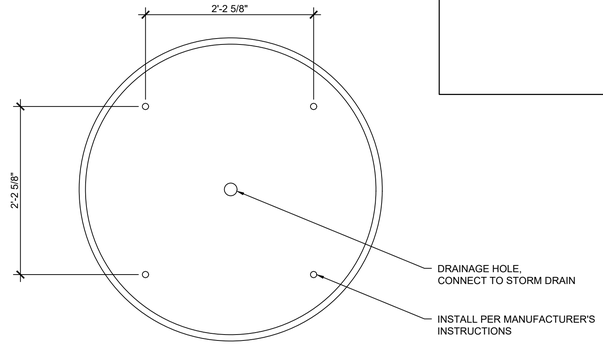

DESIGN BY:									
DRAWN BY:									
CHECKED BY:		4	7/3/2023	ISSUED FOR BID	BK	SG	BK		
APPROVED BY:		0	9/9/2022	ISSUED FOR PERMIT	CR	JT	BK		
CDOT/APPROVED BY:		NO.	DATE	REVISIONS	DES.	DRW.	CHK.	DCCO	CDOT

TRANSYSTEMS
222 SOUTH RIVERSIDE PLAZA SUITE 610
CHICAGO, ILLINOIS 60606

SITE DESIGN GROUP, LTD
888 SOUTH MICHIGAN AVENUE, SUITE P1
CHICAGO, ILLINOIS 60605

LICENSED LANDSCAPE ARCHITECT
BRADLEY C. McCAULEY
157001466
STATE OF ILLINOIS

CHICAGO DEPARTMENT OF TRANSPORTATION
DIVISION OF ENGINEERING

STATE / LAKE LOOP ELEVATED STATION
200 NORTH STATE STREET, CHICAGO, IL 60601

SITE FURNISHING DETAILS

CDOT PROJECT D-1-209

DATE: 9/9/2022

SPEC. NO.

DRAWING NO. **L-503**

REVISION NO.

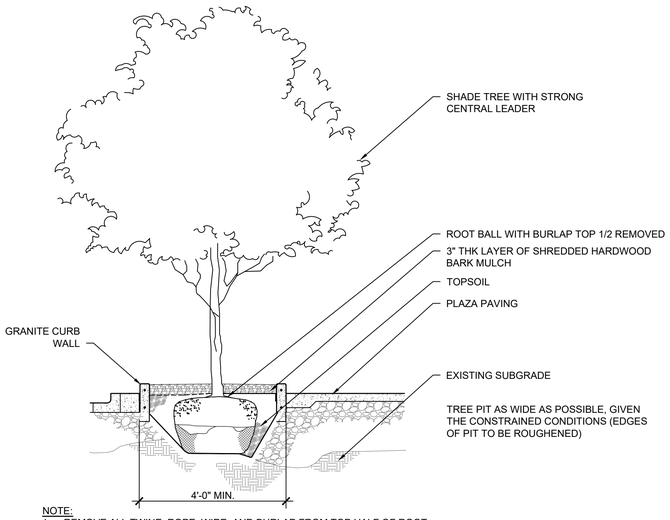

NOTE:
1. REMOVE ALL TWINE, ROPE, WIRE, AND BURLAP FROM TOP HALF OF ROOT BALL (IF PLANT IS SHIPPED WITH A WIRE BASKET AROUND THE ROOT BALL, CUT WIRE IN FOUR PLACES AND FOLD DOWN 8" INTO PLANTING HOLE).

1 SHADE TREE IN CURB PLANTER SECTION
NOT TO SCALE

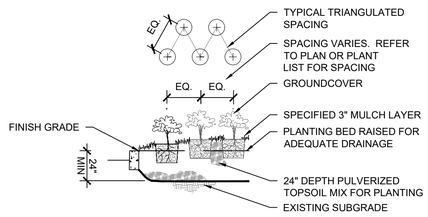

2 PERENNIAL PLANTING SECTION
NOT TO SCALE

DESIGN BY:										
DRAWN BY:										
CHECKED BY:		4	7/3/2023	ISSUED FOR BID	BK	SG	BK		
APPROVED BY:		0	9/9/2022	ISSUED FOR PERMIT	CR	JT	BK		
CDOT/APPROVED BY:		NO.	DATE	REVISIONS	DES.	DRW.	CHK.	DCCO	CDOT

TRANSYSTEMS
222 SOUTH RIVERSIDE PLAZA SUITE 610
CHICAGO, ILLINOIS 60606

SITE DESIGN GROUP, LTD
888 SOUTH MICHIGAN AVENUE, SUITE P1
CHICAGO, ILLINOIS 60605

LICENSED LANDSCAPE ARCHITECT
BRADLEY C. McCAULEY
157001466
STATE OF ILLINOIS

CHICAGO DEPARTMENT OF TRANSPORTATION
DIVISION OF ENGINEERING

STATE / LAKE LOOP ELEVATED STATION
200 NORTH STATE STREET, CHICAGO, IL 60601

SPEC. NO.

LANDSCAPE DETAILS

DRAWING NO.
L-504

CDOT PROJECT D-1-209 | DATE: 9/9/2022 | REVISION NO.

GENERAL NOTES:

1. THE INTENT OF THESE MASS DEMOLITION (SD) DRAWINGS IS TO COVER THE SCOPE OF MAJOR STRUCTURAL ITEMS TO BE DEMOLISHED INCLUDING THE EXISTING TRACK STRUCTURE, THE EXISTING STATE AND LAKE STATION, AND THEIR ASSOCIATED PLATFORMS AND SIDEWALK VAULTS. THE DEMOLITION OF SPECIFIC STRUCTURAL MEMBERS SHALL BE COORDINATED BY CONTRACTOR.
2. FOR ADDITIONAL STRUCTURAL NOTES, SEE SHEETS S-001 THRU S-003.
3. FOR SUGGESTED SHORING DETAILS, SEE SX SHEETS.
4. FOR EXISTING TRACK STRUCTURE REPAIR DETAILS, SEE SR SHEETS.
5. FOR PROPOSED TRACK STRUCTURE, PLATFORM, CANOPY, AND VAULTED SIDEWALK FILLING DETAILS, SEE S SHEETS.
6. THE S DRAWINGS COVER LIMITED SELECT DEMO WHERE NOTED.
7. CONTRACTOR SHALL SURVEY ALL EXISTING CONDITIONS THAT ARE INDICATED TO BE DEMOLISHED PRIOR TO BEGINNING DEMOLITION. ANY DEVIATION FROM THE DOCUMENTS SHALL BE SURVEYED AND SUBMITTED TO THE COMMISSIONER FOR APPROVAL.
8. FOLLOWING CONTRACTOR SURVEY, ANY OTHER ELEMENTS THAT INTERFER WITH NEW CONSTRUCTION SHALL BE DOCUMENTED AND SUBMITTED TO THE COMMISSIONER CLEARLY AND INDICATING PROPOSED ELEMENT DEMO FOR APPROVAL PRIOR TO PERFORMING DEMO.
9. THE CONTRACTOR IS FULLY RESPONSIBLE FOR THE MEANS AND METHODS OF DEMOLITION AND THE INTEGRITY AND STABILITY OF THE EXISTING STRUCTURE DURING DEMOLITION UNTIL THE WORK IS COMPLETED. THE CONTRACTOR SHALL PROVIDE SHORING IN REQUIRED LOCATIONS WHERE EXISTING CONSTRUCTION TO REMAIN WILL BE AFFECTED BY DEMOLITION. THE SUBMITTED DEMO PROCEDURE IS TO BE SIGNED AND SEALED BY AN ILLINOIS LICENSED STRUCTURAL ENGINEER AND SUBMITTED TO COMMISSIONER FOR APPROVAL.
10. THE CONTRACTOR IS RESPONSIBLE FOR REPAIRS TO ANY STRUCTURAL ELEMENTS WHICH ARE TO REMAIN AND THAT HAVE BEEN DAMAGED DURING THE DEMOLITION PROCESS TO THE COMPLETE SATISFACTION OF THE COMMISSIONER. THE REPAIRS SHALL BE AT NO EXPENSE TO THE COMMISSIONER. ALL REPAIR WORK SHALL BE DESIGNED BY AN ILLINOIS LICENSED STRUCTURAL ENGINEER AND SUBMITTED TO THE COMMISSIONER FOR REVIEW AND APPROVAL PRIOR TO COMMENCING REPAIR WORK.
11. ALL EXISTING FRAMING IS INDICATED FOR REFERENCE ONLY AND IS TO BE FIELD VERIFIED BY THE CONTRACTOR. VERIFY THE EXACT EXTENT OF DEMOLITION AT THE SITE. DETERMINE THE NATURE AND EXTENT OF DEMOLITION THAT WILL BE NECESSARY BY COMPARING THE CONTRACT DOCUMENTS WITH THE EXISTING CONSTRUCTION.
12. THE CONTRACTOR SHALL USE THE STRUCTURAL CONTRACT DOCUMENTS IN CONJUNCTION WITH THE ARCHITECTURAL AND MEP DEMOLITION CONTRACT DOCUMENTS. IN THE EVENT OF CONFLICTS THE CONTRACTOR SHALL IMMEDIATELY NOTIFY THE COMMISSIONER IN WRITING.
13. THE CONTRACTOR SHALL USE QUALIFIED, EXPERIENCED PERSONNEL FOR DEMOLITION AND REMOVAL OPERATIONS AND PERFORM DEMOLITION AND REMOVAL OPERATIONS IN A CAREFUL AND ORDERLY MANNER TO PREVENT HAZARDS TO PERSONS, DAMAGE TO PROPERTY, AND THE SPREADING OF DUST AND DEBRIS.
14. DO NOT PERMIT PORTIONS OF THE STRUCTURE TO FALL NOR DEBRIS TO DROP EXCEPT BY METHODS WHICH WILL INSURE INTEGRITY OF THE STRUCTURE AND NO DAMAGE TO THE ROADWAY OR SIDEWALK BELOW.
15. PRIOR TO THE START OF WORK, VERIFY THAT THE SCOPE OF DEMOLITION INDICATED ON THE CONTRACT DOCUMENTS SHALL NOT DAMAGE, CUT OR DISRUPT SERVICE OF ANY MECHANICAL SYSTEM, ELECTRICAL SYSTEM, UTILITY, OR COMMUNICATION SYSTEMS EMBEDDED IN THE EXISTING STRUCTURE.
16. DO NOT REMOVE MORE OF THE EXISTING STRUCTURE THAN INDICATED ON CONTRACT DOCUMENTS. DO NOT DAMAGE, MAR, CUT OR DEFACE THE REMAINING STRUCTURE OR MATERIALS TO BE REUSED.
17. THE CONTRACTOR SHALL INCLUDE IN THEIR BID THE COST OF REMOVING DEMOLISHED MATERIALS FROM THE SITE IN ACCORDANCE WITH ALL APPLICABLE LAWS, CODES, AND REGULATIONS.
18. WHERE NEW OPENINGS IN EXISTING CONCRETE SLABS OR WALLS ARE TO BE CREATED, HOLES SHALL BE CORED AT THE OUTSIDE CORNERS OF THE NEW OPENING PRIOR TO DEMOLITION. SAW-CUT AND DEMOLISH SLAB ONLY AFTER THE INSTALLATION OF ALL REQUIRED NEW STRUCTURAL FRAMING AND/OR REINFORCEMENT IN PLAN OR SECTION, UNO. SAW CUTTING SHALL BE STRAIGHT AND SHALL NOT EXTEND INTO EXISTING SLAB TO REMAIN NOR BEYOND THE HOLES CORED AT THE CORNERS OF THE NEW OPENING.

RIVET REMOVAL PROCEDURE

1. CHIP AND PUNCH PROCEDURE - WHEN RIVET SHANK IS NOT DEFORMED (BASIS OF DESIGN)
   a. STEP 1 - CHIP: USING A RIVET BUSTER WITH A CHISEL TIP, CHIP OFF THE RIVET HEAD. APPLY FORCE TO HEAD AT THE SHALLOWEST POSSIBLE ANGLE TO AVOID DAMAGING OR GOUGING THE PARENT STEEL.
   b. STEP 2 - PUNCH: USING A RIVET BUSTER WITH A ROUND, BACK-OUT PUNCH BIT, PUNCH OUT THE RIVET SHANK ON THE END WHERE THE HEAD WAS REMOVED.
   c. REAM THE EXISTING HOLE THROUGH THE STEEL PLIES TO REMOVE SLAG OR OTHER IRREGULARITIES IN THE HOLE SURFACE WITH 1 1/16" DIAMETER REAMERS, OR GRIND WITH DIE GRINDER. IF HOLE HAS GOUGES, USE DIE GRINDER TO REMOVE GOUGES.
2. CUT AND WASH PROCEDURE - RIVET SHANK IS DEFORMED (ALTERNATE)
   a. THIS PROCEDURE SHALL ONLY BE USED IF THE BASIS OF DESIGN METHOD IS INEFFECTIVE AND WITH THE COMMISSIONER'S APPROVAL AT EVERY BOLT LOCATION.
   b. ANY CUT AND/OR WASH PROCEDURES USED TO REMOVE RIVETS SHALL BE SUBMITTED TO THE COMMISSIONER FOR APPROVAL. THE APPROVAL SHALL BE CONTINGENT ON THE SUBCONTRACTOR PHYSICALLY DEMONSTRATING THEIR PROCEDURES IN THE FIELD EXHIBIT LIMITED OR NO DAMAGE TO THE PARENT STEEL MEMBER.
   c. STEP 1 CUT: USING A RIVET BUSTER WITH A CHISEL TIP, ORIENT THE TIP PERPENDICULAR TO THE SHANK AND CUT OFF THE RIVET HEAD. AVOID GOUGING, SCORING, OR DAMAGING THE PARENT STEEL. REMOVE BOTH HEADS OF THE RIVET.
   d. STEP 2 WASH: USING A PLASMA CUTTER, ORIENT THE TIP PARALLEL TO THE LONGITUDINAL AXIS OF THE SHANK AND BLOW THROUGH THE CENTER OF THE RIVET SHANK TO CREATE A RELIEF HOLE. KEEP THE BURN HOLE STRAIGHT AND SQUARE TO THE PIECE, ENLARGING THE HOLE FROM INSIDE TO OUTSIDE. AVOID OVERHEATING OR DAMAGING THE ADJACENT STEEL.
   e. STEP 3 REMOVAL: USE A FLAT PIN PUNCH AND HAMMER (OR STEP 2 IN THE CHIP & PUNCH PROCEDURE ABOVE) TO DRIVE OUT THE REMAINING SHANK FROM THE HOLE.
   f. IF THE REMAINING RIVET SHANK CANNOT BE BACKED OUT, THEN BURN OUT REMAINING RIVET SHAFT USING A PLASMA CUTTER WITHOUT DAMAGING ADJACENT MATERIAL. MARK THE BURNED HOLE. CONTRACTOR TO NOTE BURNED HOLE LOCATION WITH AS REPAIRED WITH SUBMITTAL.
   g. REAM THE EXISTING HOLE THROUGH THE STEEL PLIES TO REMOVE SLAG OR OTHER IRREGULARITIES IN THE HOLE SURFACE WITH 1 1/16" DIAMETER REAMERS, OR GRIND WITH DIE GRINDER. IF HOLE HAS GOUGES, USE DIE GRINDER TO REMOVE GOUGES.
3. DURING THE RIVET REMOVAL OPERATION, THE CONTRACTOR SHALL CATCH OR PROVIDE OTHER MEANS TO COLLECT / SAFELY DEFLECT THE RAPIDLY EXPELLED RIVET SHANKS TO PREVENT INJURY TO SURROUNDING SURFACES OR WORKERS.
4. NOISE MITIGATION PROCEDURES ARE REQUIRED DURING RIVET REMOVAL.
5. NO MORE THAN ONE RIVET SHALL BE REMOVED AT ONE TIME AND REPLACED WITH HS SC BOLTS BEFORE THE NEXT RIVET CAN BE REMOVED.
6. REAMED HOLES SHALL NOT BE OVERSIZED IN RELATION TO THE NEW HS BOLTS. IF REAMED HOLE IS LARGER THAN THE STANDARD HOLE SIZE FOR THE HS BOLT, THE HOLE SHALL BE REAMED TO THE STANDARD HOLE SIZE FOR THE NEXT HS BOLT SIZE.
7. NO ABANDONED HOLES ARE ALLOWED. ALL RIVET HOLES MUST BE FILLED WITH HS SC BOLTS.

DESIGN BY:	WJC								
DRAWN BY:	CMG	4	7/3/2023	ISSUED FOR BID					
CHECKED BY:	MDS	1	11/4/2022	PERMIT REVISION #1					
APPROVED BY:	MDS	0	9/9/2022	ISSUED FOR PERMIT					
CDOT/APPROVED BY:		NO.	DATE	REVISIONS	DES.	DRW.	CHK.	DCCO	CDOT

TRANSYSTEMS
222 SOUTH RIVERSIDE PLAZA SUITE 610
CHICAGO, ILLINOIS 60606

SKIDMORE, OWINGS & MERRILL LLP
224 SOUTH MICHIGAN AVENUE, SUITE 1000
CHICAGO, ILLINOIS 60604

CHICAGO DEPARTMENT OF TRANSPORTATION
DIVISION OF ENGINEERING

STATE / LAKE LOOP ELEVATED STATION
200 NORTH STATE STREET, CHICAGO, IL 60601

STRUCTURAL DEMOLITION NOTES

CDOT PROJECT D-1-209

DATE: 9/9/2022

SPEC. NO.

DRAWING NO. SD-001

REVISION NO.

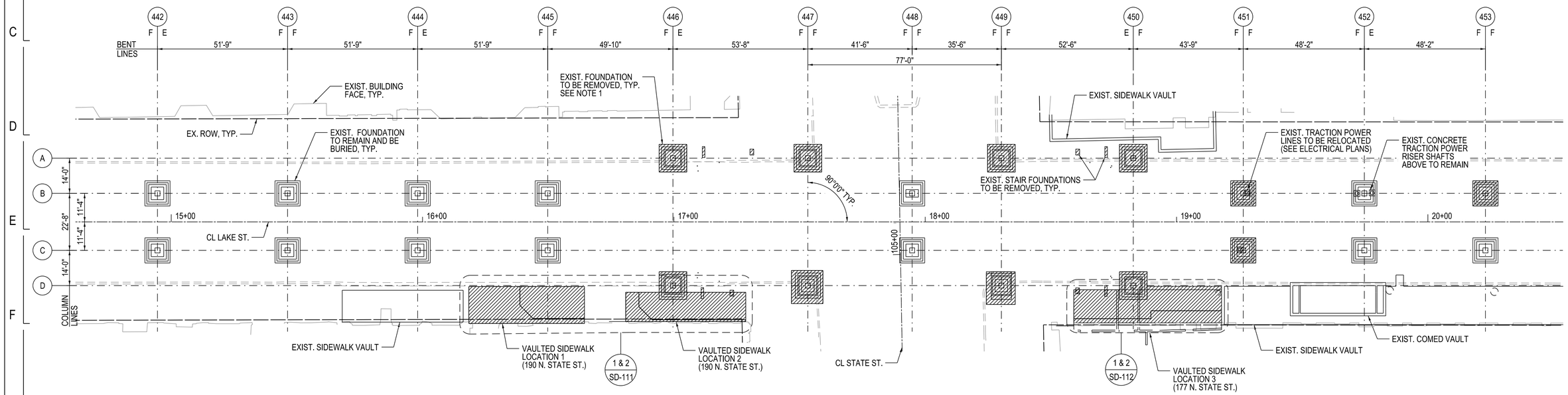

1 FOUNDATION DEMOLITION PLAN
1" = 20'-0"

LEGEND

INDICATES ELEMENT TO BE REMOVED

NOTES:

1. ALL FOUNDATIONS WILL BE REMOVED TO 3' BELOW GROUND AND BURIED. EVEN IF NOT MARKED FOR REMOVAL ON THIS SHEET. EXISTING FOUNDATIONS IN CONFLICT WITH PROPOSED STORM SEWER AND WATER MAIN INSTALLATON OR ANY OTHER PROPOSED ELEMENTS SHALL BE PARTIALLY OR FULLY REMOVED AS NECESSARY TO ALLOW FOR NEW CONSTRUCTION.
2. EXIST. UTILITIES NOT SHOWN FOR CLARITY. SEE CIVIL PLANS.
3. SOME FOUNDATIONS NOT SHOWN FOR CLARITY. SEE VAULTED SIDEWALK DEMOLITION PLANS.
4. DIMENSIONS INDICATED FOR EXISTING STRUCTURE ARE TO BE VERIFIED IN FIELD.

DESIGN BY:	WJC								
DRAWN BY:	CMG	4	7/3/2023	ISSUED FOR BID					
CHECKED BY:	MDS	1	11/4/2022	PERMIT REVISION #1					
APPROVED BY:	MDS	0	9/9/2022	ISSUED FOR PERMIT					
CDOT/APPROVED BY:		NO.	DATE	REVISIONS	DES.	DRW.	CHK.	DCCO	CDOT

TRANSYSTEMS
222 SOUTH RIVERSIDE PLAZA SUITE 610
CHICAGO, ILLINOIS 60606

SKIDMORE, OWINGS & MERRILL LLP
224 SOUTH MICHIGAN AVENUE, SUITE 1000
CHICAGO, ILLINOIS 60604

CHICAGO DEPARTMENT OF TRANSPORTATION
DIVISION OF ENGINEERING

STATE / LAKE LOOP ELEVATED STATION
200 NORTH STATE STREET, CHICAGO, IL 60601

SPEC. NO.

DEMOLITION PLAN - GROUND LEVEL

DRAWING NO. SD-101

CDOT PROJECT D-1-209 | DATE: 9/9/2022 | REVISION NO.

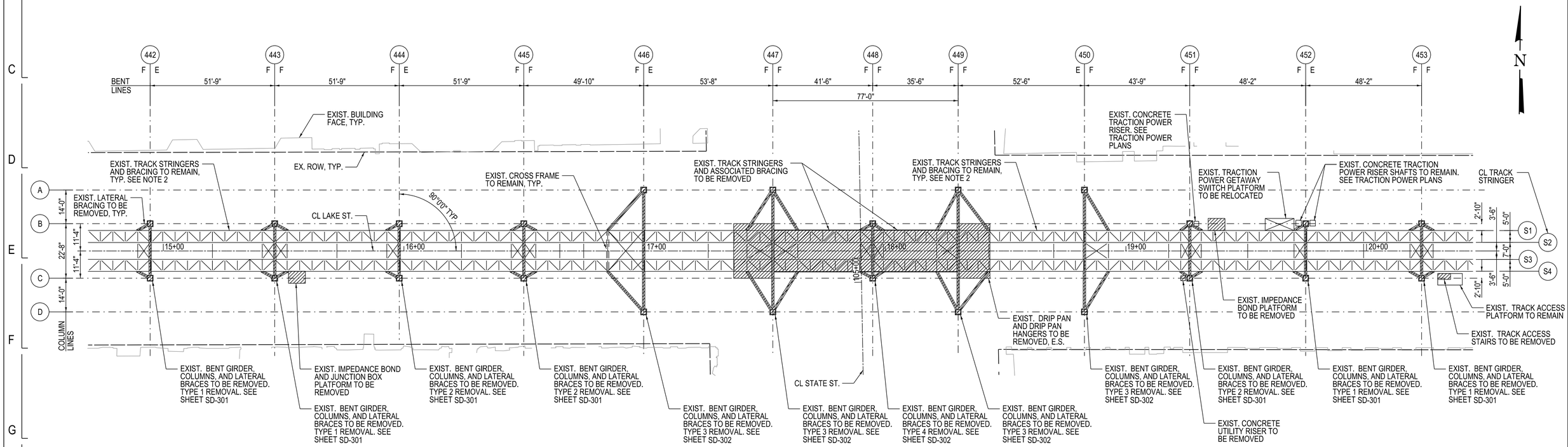

1 TRACK STRUCTURE DEMOLITION PLAN

1" = 20'-0"

LEGEND

INDICATES ELEMENT TO BE REMOVED

NOTES:

1. EXISTING TRACK STRINGERS TO REMAIN WILL REQUIRE TEMPORARY SHORING DURING BENT REMOVAL. EXISTING STRUCTURAL BENT COLUMNS SHALL BE LATERALLY BRACED BEFORE DEMOLITION OF FRAMING ELEMENTS.
2. FOR EXISTING TRACK STRINGER REPAIR PLANS, SEE SR SHEETS.
3. UTILITIES AND RELATED ELEMENTS ON OR WITHIN THE TRACK STRUCTURE NOT SHOWN FOR CLARITY. SEE CIVIL PLANS FOR MORE INFORMATION.
4. DIMENSIONS INDICATED FOR EXISTING STRUCTURE ARE TO BE VERIFIED IN FIELD.

DESIGN BY:	WJC								
DRAWN BY:	CMG	4	7/3/2023	ISSUED FOR BID					
CHECKED BY:	MDS	1	11/4/2022	PERMIT REVISION #1					
APPROVED BY:	MDS	0	9/9/2022	ISSUED FOR PERMIT					
CDOT/APPROVED BY:		NO.	DATE	REVISIONS	DES.	DRW.	CHK.	DCCO	CDOT

TRANSYSTEMS
222 SOUTH RIVERSIDE PLAZA SUITE 610
CHICAGO, ILLINOIS 60606

SKIDMORE, OWINGS & MERRILL LLP
224 SOUTH MICHIGAN AVENUE, SUITE 1000
CHICAGO, ILLINOIS 60604

CHICAGO DEPARTMENT OF TRANSPORTATION
DIVISION OF ENGINEERING

STATE / LAKE LOOP ELEVATED STATION
200 NORTH STATE STREET, CHICAGO, IL 60601

SPEC. NO.

DEMOLITION PLAN - TRACK LEVEL

DRAWING NO. SD-102

CDOT PROJECT D-1-209 | DATE: 9/9/2022 | REVISION NO.

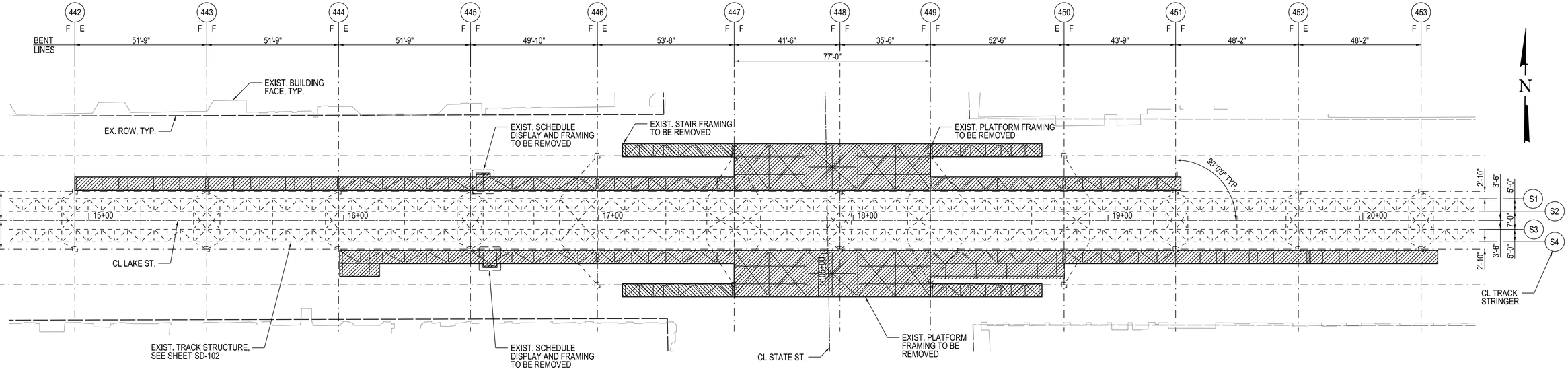

1 PLATFORM FRAMING DEMOLITION PLAN

1" = 20'-0"

LEGEND

INDICATES ELEMENT TO BE REMOVED

NOTES:

1. UTILITIES AND RELATED ELEMENTS ON THE PLATFORM OR WITHIN THE FRAMING NOT SHOWN FOR CLARITY. SEE CIVIL PLANS FOR MORE INFORMATION.
2. FOR PLATFORM, STATION, AND ROOF REMOVALS, SEE ARCHITECTURAL DEMOLITION PLANS.
3. DIMENSIONS INDICATED FOR EXISTING STRUCTURE ARE TO BE VERIFIED IN FIELD.

DESIGN BY:	WJC								
DRAWN BY:	CMG	4	7/3/2023	ISSUED FOR BID					
CHECKED BY:	MDS	1	11/4/2022	PERMIT REVISION #1					
APPROVED BY:	MDS	0	9/9/2022	ISSUED FOR PERMIT					
CDOT/APPROVED BY:		NO.	DATE	REVISIONS	DES.	DRW.	CHK.	DCCO	CDOT

TRANSYSTEMS
222 SOUTH RIVERSIDE PLAZA SUITE 610
CHICAGO, ILLINOIS 60606

SKIDMORE, OWINGS & MERRILL LLP
224 SOUTH MICHIGAN AVENUE, SUITE 1000
CHICAGO, ILLINOIS 60604

CHICAGO DEPARTMENT OF TRANSPORTATION
DIVISION OF ENGINEERING

STATE / LAKE LOOP ELEVATED STATION
200 NORTH STATE STREET, CHICAGO, IL 60601

SPEC. NO.

DEMOLITION PLAN - PLATFORM LEVEL

DRAWING NO.
SD-103

CDOT PROJECT D-1-209

DATE: 9/9/2022

REVISION NO.

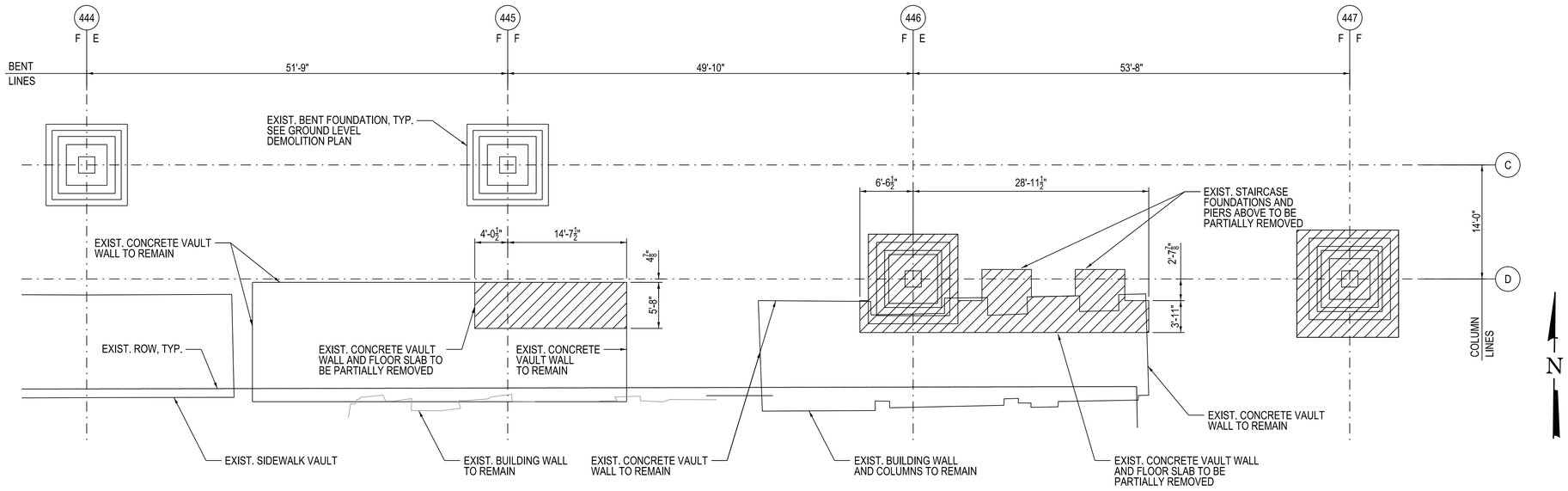

1 WEST VAULTED SIDEWALKS DEMOLITION PLAN - BASEMENT LEVEL

1/8" = 1'-0"

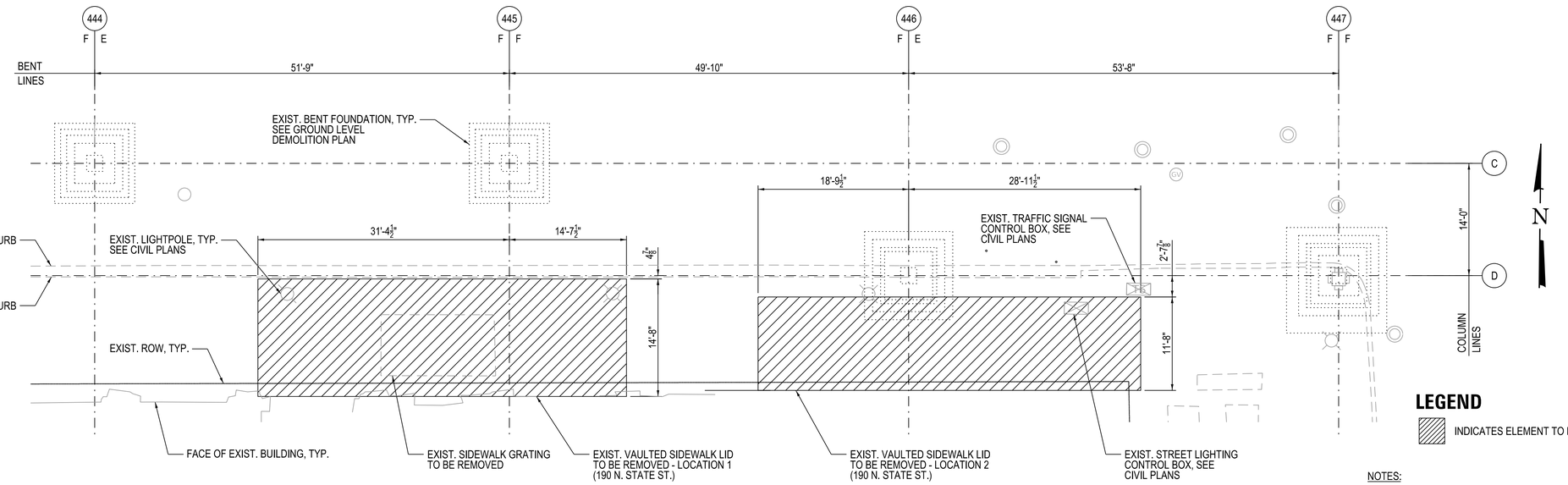

2 WEST VAULTED SIDEWALKS DEMOLITION PLAN - STREET LEVEL

1/8" = 1'-0"

LEGEND

INDICATES ELEMENT TO BE REMOVED

NOTES:

1. CONTRACTOR TO VERIFY EXIST. VAULT LID LIMITS IN FIELD PRIOR TO REMOVAL.
2. LIMITED VAULT CONTENTS, EQUIPMENT, AND UTILITIES ARE SHOWN FOR CLARITY. SEE CIVIL PLANS FOR MORE INFORMATION.
3. DEMOLITION IS TO BE ASSUMED FOR THE FULL HEIGHT OF AN ELEMENT, UNO.

DESIGN BY:	WJC								
DRAWN BY:	CMG	4	7/3/2023	ISSUED FOR BID					
CHECKED BY:	MDS	1	11/4/2022	PERMIT REVISION #1					
APPROVED BY:	MDS	0	9/9/2022	ISSUED FOR PERMIT					
CDOT/APPROVED BY:		NO.	DATE	REVISIONS	DES.	DRW.	CHK.	DCCO	CDOT

TRANSYSTEMS
222 SOUTH RIVERSIDE PLAZA SUITE 610
CHICAGO, ILLINOIS 60606

SKIDMORE, OWINGS & MERRILL LLP
224 SOUTH MICHIGAN AVENUE, SUITE 1000
CHICAGO, ILLINOIS 60604

CHICAGO DEPARTMENT OF TRANSPORTATION
DIVISION OF ENGINEERING

STATE / LAKE LOOP ELEVATED STATION
200 NORTH STATE STREET, CHICAGO, IL 60601

SPEC. NO.

PARTIAL DEMOLITION PLAN WEST - VAULTED SIDEWALKS

DRAWING NO. SD-111

CDOT PROJECT D-1-209 | DATE: 9/9/2022 | REVISION NO.

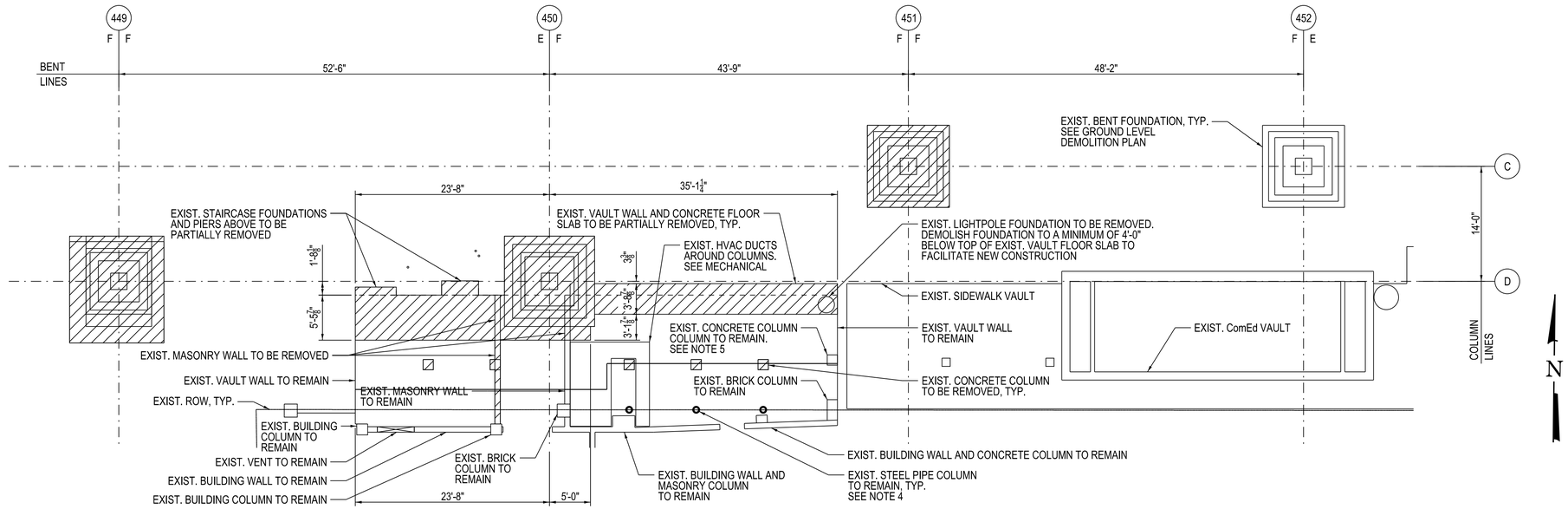

1 EAST VAULTED SIDEWALKS DEMOLITION PLAN - BASEMENT LEVEL

1/8" = 1'-0"

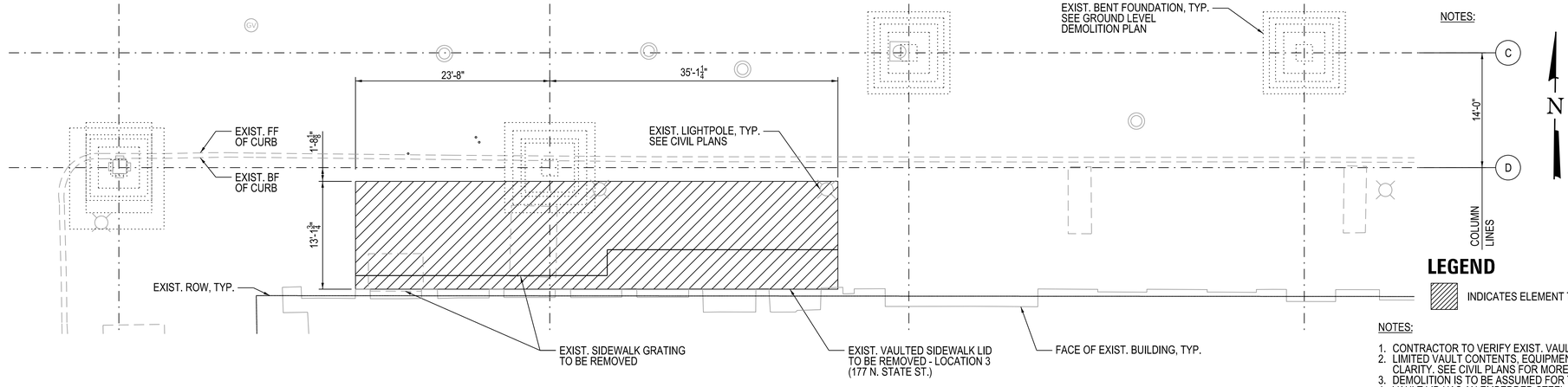

2 EAST VAULTED SIDEWALKS DEMOLITION PLAN - STREET LEVEL

1/8" = 1'-0"

NOTES:

LEGEND

INDICATES ELEMENT TO BE REMOVED

NOTES:

1. CONTRACTOR TO VERIFY EXIST. VAULT LID LIMITS IN FIELD PRIOR TO REMOVAL.
2. LIMITED VAULT CONTENTS, EQUIPMENT, AND UTILITIES ARE SHOWN FOR CLARITY. SEE CIVIL PLANS FOR MORE INFORMATION.
3. DEMOLITION IS TO BE ASSUMED FOR THE FULL HEIGHT OF AN ELEMENT, UNO.
4. VAULT LID HAS AN EMBEDDED STEEL CHANNEL THAT BEARS ON STEEL BRACKETS AFFIXED TO EXIST. PIPE COLUMNS. EXIST. BUILDING SLAB IS CAST AGAINST BACK OF STEEL CHANNEL AND IS NOT TO BE DAMAGED DURING DEMOLITION OPERATIONS.
5. EXIST. COLUMN CONCRETE TO BE REMOVED TO BOTTOM OF PROPOSED LID.
6. PROTECT, CLEAN, AND REINCORPORATE REINFORCEMENT INTO NEW LID.

DESIGN BY:	WJC								
DRAWN BY:	CMG	4	7/3/2023	ISSUED FOR BID					
CHECKED BY:	MDS	1	11/4/2022	PERMIT REVISION #1					
APPROVED BY:	MDS	0	9/9/2022	ISSUED FOR PERMIT					
CDOT/APPROVED BY:		NO.	DATE	REVISIONS	DES.	DRW.	CHK.	DCCO	CDOT

TRANSYSTEMS
222 SOUTH RIVERSIDE PLAZA SUITE 610
CHICAGO, ILLINOIS 60606

SKIDMORE, OWINGS & MERRILL LLP
224 SOUTH MICHIGAN AVENUE, SUITE 1000
CHICAGO, ILLINOIS 60604

CHICAGO DEPARTMENT OF TRANSPORTATION
DIVISION OF ENGINEERING

STATE / LAKE LOOP ELEVATED STATION
200 NORTH STATE STREET, CHICAGO, IL 60601

SPEC. NO.

PARTIAL DEMOLITION PLAN EAST - VAULTED SIDEWALKS

DRAWING NO. SD-112

CDOT PROJECT D-1-209 | DATE: 9/9/2022 | REVISION NO.

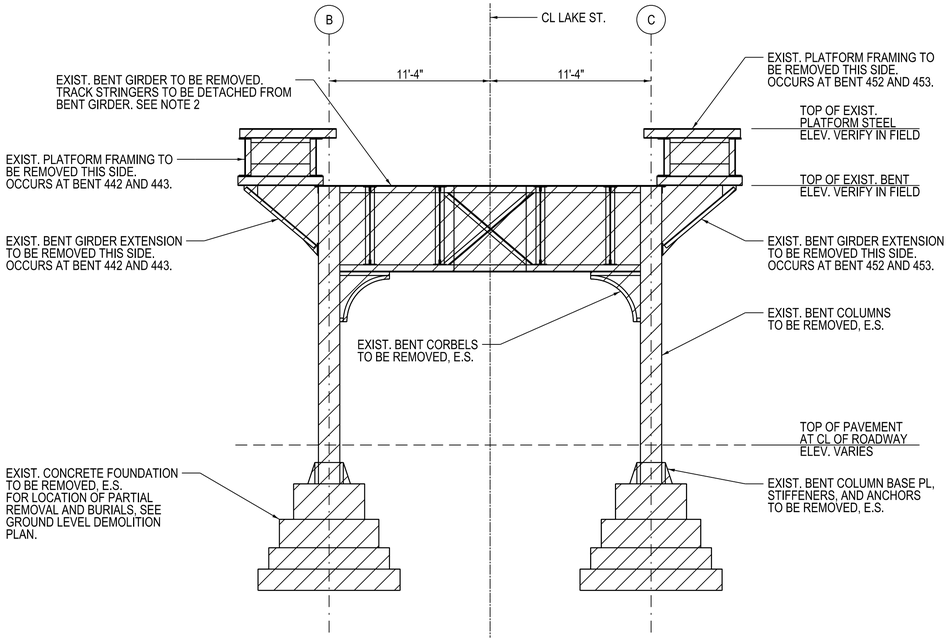

1 EXISTING BENT REMOVAL TYPE 1

3/16" = 1'-0" (LOOKING EAST, 4 LOCATIONS)

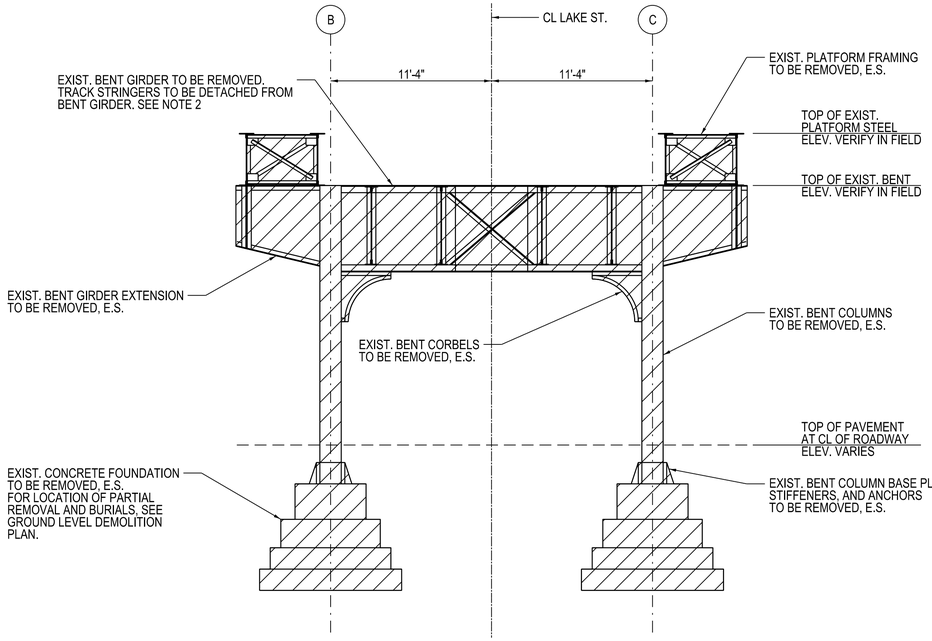

2 EXISTING BENT REMOVAL TYPE 2

3/16" = 1'-0" (LOOKING EAST, 3 LOCATIONS)

LEGEND

INDICATES ELEMENT TO BE REMOVED

NOTES:

1. ALL FOUNDATIONS WILL BE REMOVED TO 3' BELOW GROUND AND BURIED. EXISTING FOUNDATIONS IN CONFLICT WITH PROPOSED STORM SEWER AND WATER MAIN INSTALLATON OR ANY OTHER PROPOSED ELEMENTS SHALL BE PARTIALLY OR FULLY REMOVED AS NECESSARY TO ALLOW FOR NEW CONSTRUCTION.
2. TRACK STRINGERS AFFIXED TO THE BENT GIRDER SHALL BE PROTECTED AND SHORED IN PLACE PRIOR TO REMOVAL OF ANY BENT, BRACE OR PLATFORM ELEMENTS. EXIST. TRACK STRINGERS TO BE RE-INSTALLED ONTO PROPOSED BENT GIRDER. SEE SHEET S-524

DESIGN BY:	CMG									
DRAWN BY:	CMG	4	7/3/2023	ISSUED FOR BID						
CHECKED BY:	WJC	1	11/4/2022	PERMIT REVISION #1						
APPROVED BY:	MDS	0	9/9/2022	ISSUED FOR PERMIT						
CDOT/APPROVED BY:		NO.	DATE	REVISIONS	DES.	DRW.	CHK.	DCCO	CDOT	

TRANSYSTEMS
222 SOUTH RIVERSIDE PLAZA SUITE 610
CHICAGO, ILLINOIS 60606

SKIDMORE, OWINGS & MERRILL LLP
224 SOUTH MICHIGAN AVENUE, SUITE 1000
CHICAGO, ILLINOIS 60604

CHICAGO DEPARTMENT OF TRANSPORTATION
DIVISION OF ENGINEERING

STATE / LAKE LOOP ELEVATED STATION
200 NORTH STATE STREET, CHICAGO, IL 60601

STRUCTURAL DEMOLITION SECTIONS 1

CDOT PROJECT D-1-209

DATE: 9/9/2022

SPEC. NO.

DRAWING NO. SD-301

REVISION NO.

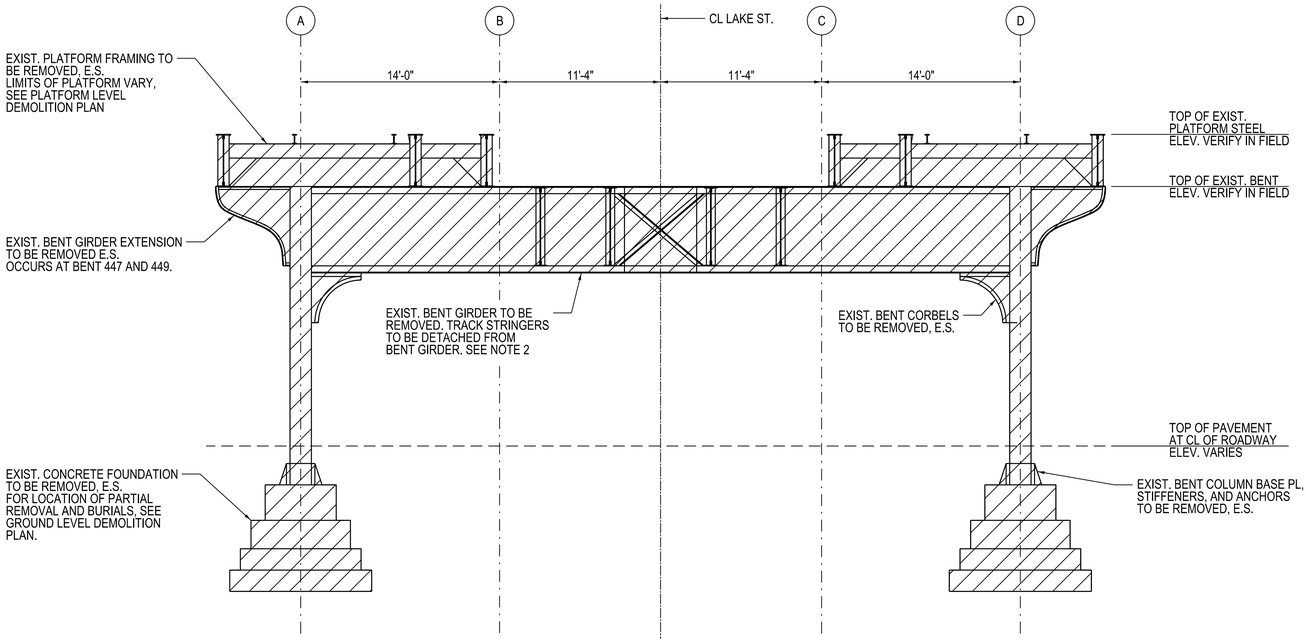

1 EXISTING BENT REMOVAL TYPE 3

3/16" = 1'-0" (LOOKING EAST, 4 LOCATIONS)

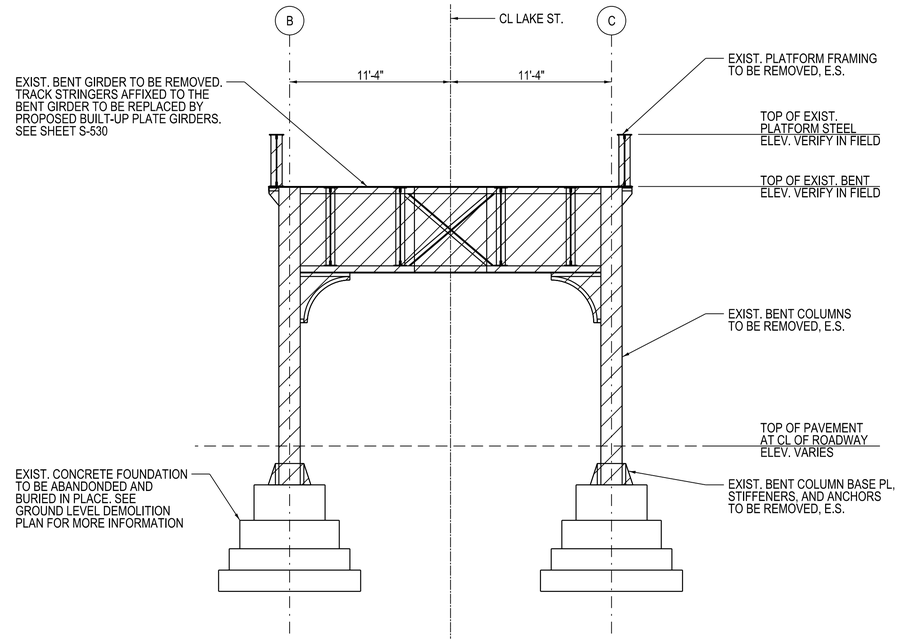

2 EXISTING BENT REMOVAL TYPE 4

3/16" = 1'-0" (LOOKING EAST, 1 LOCATION)

LEGEND

INDICATES ELEMENT TO BE REMOVED

NOTES:

1. ALL FOUNDATIONS WILL BE REMOVED TO 3' BELOW GROUND AND BURIED. EXISTING FOUNDATIONS IN CONFLICT WITH PROPOSED STORM SEWER AND WATER MAIN INSTALLATON OR ANY OTHER PROPOSED ELEMENTS SHALL BE PARTIALLY OR FULLY REMOVED AS NECESSARY TO ALLOW FOR NEW CONSTRUCTION.
2. TRACK STRINGERS AFFIXED TO THE BENT GIRDER SHALL BE PROTECTED AND SHORED IN PLACE PRIOR TO REMOVAL OF ANY BENT, BRACE OR PLATFORM ELEMENTS. EXIST. TRACK STRINGERS TO BE RE-INSTALLED ONTO PROPOSED BENT GIRDER. SEE SHEET S-524

DESIGN BY:	CMG									
DRAWN BY:	CMG	4	7/3/2023	ISSUED FOR BID						
CHECKED BY:	WJC	1	11/4/2022	PERMIT REVISION #1						
APPROVED BY:	MDS	0	9/9/2022	ISSUED FOR PERMIT						
CDOT/APPROVED BY:		NO.	DATE	REVISIONS	DES.	DRW.	CHK.	DCCO	CDOT	

TRANSYSTEMS
222 SOUTH RIVERSIDE PLAZA SUITE 610
CHICAGO, ILLINOIS 60606

SKIDMORE, OWINGS & MERRILL LLP
224 SOUTH MICHIGAN AVENUE, SUITE 1000
CHICAGO, ILLINOIS 60604

CHICAGO DEPARTMENT OF TRANSPORTATION
DIVISION OF ENGINEERING

STATE / LAKE LOOP ELEVATED STATION
200 NORTH STATE STREET, CHICAGO, IL 60601

STRUCTURAL DEMOLITION SECTIONS 2

CDOT PROJECT D-1-209

DATE: 9/9/2022

SPEC. NO.

DRAWING NO. SD-302

REVISION NO.

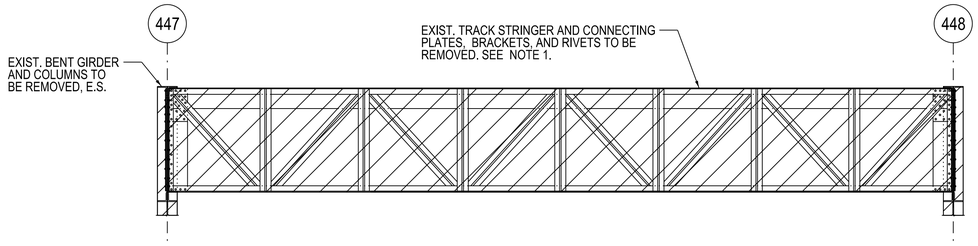

1 SPAN 447-448 TRACK STRINGER REMOVAL
1/4" = 1'-0"

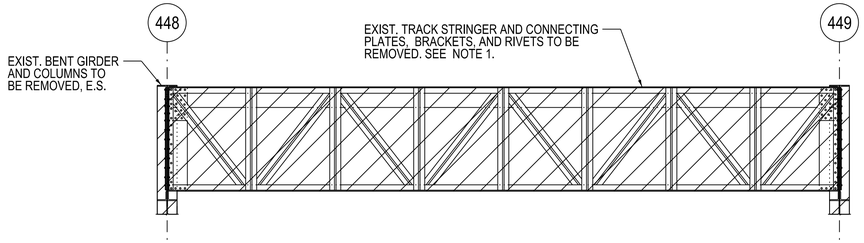

2 SPAN 448-449 TRACK STRINGER REMOVAL
1/4" = 1'-0"

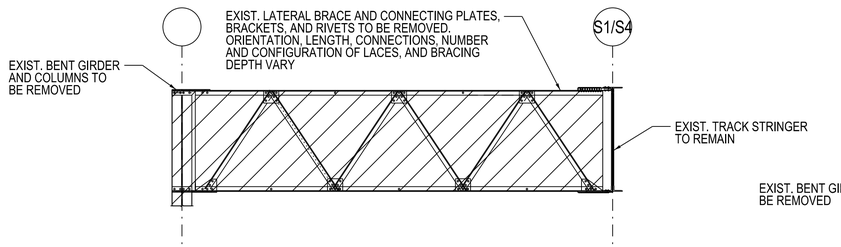

3 TYPICAL LATERAL BRACING REMOVAL TYPE 1
1/4" = 1'-0"

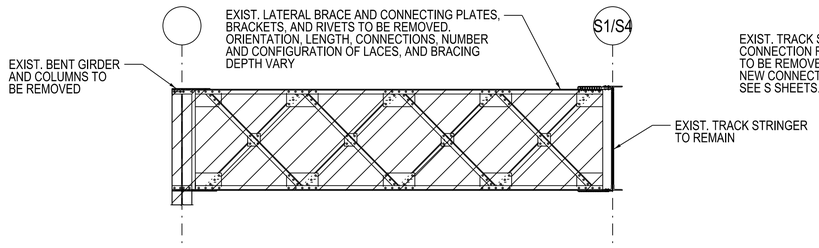

4 TYPICAL LATERAL BRACING REMOVAL TYPE 2
1/4" = 1'-0"

LEGEND

INDICATES ELEMENT TO BE REMOVED

NOTES:

1. PRIOR TO THEIR REMOVAL, THESE EXIST. STRINGERS ARE TO BE SHORED DURING REMOVAL OF BENT 447 OR 449 AND RE-INSTALLED ONTO THE PROPOSED BENT 447 OR 449, SEE DETAILS 5 AND 6. DO NOT REMOVE BENT 448 OR THESE EXIST. TRACK STRINGERS UNTIL BENTS 447 AND 449 HAVE BEEN FULLY REMOVED AND REPLACED WITH THE PROPOSED BENTS, EXIST. LATERAL BRACING ATTACHED TO THESE STRINGERS MAY BE REMOVED DURING BENT 447 OR 449 REMOVAL.

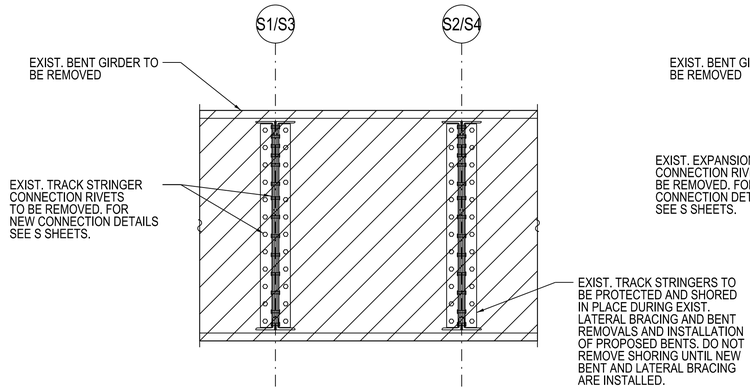

5 STRINGER CONN. REMOVAL DETAIL - FIX-FIX
1/2" = 1'-0"

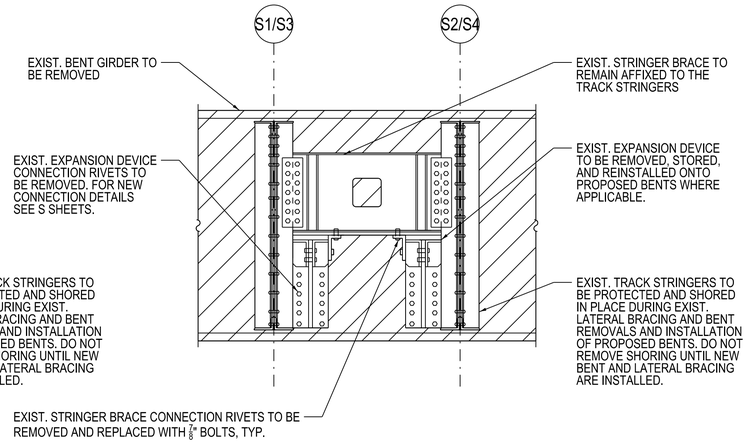

6 STRINGER CONN. REMOVAL DETAIL - FIX-EXP
1/2" = 1'-0"

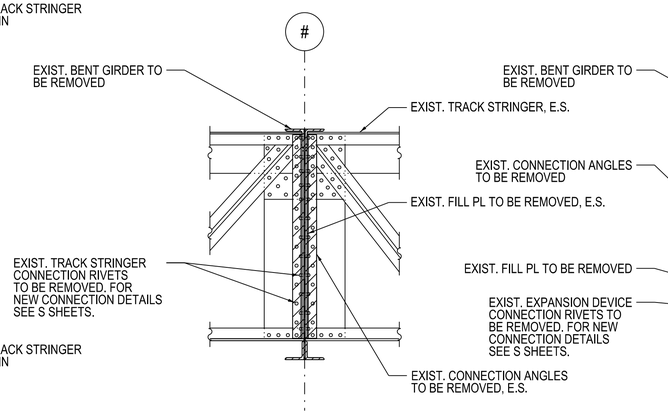

7 STRINGER CONN. REMOVAL SECTION - FIX-FIX
1/2" = 1'-0"

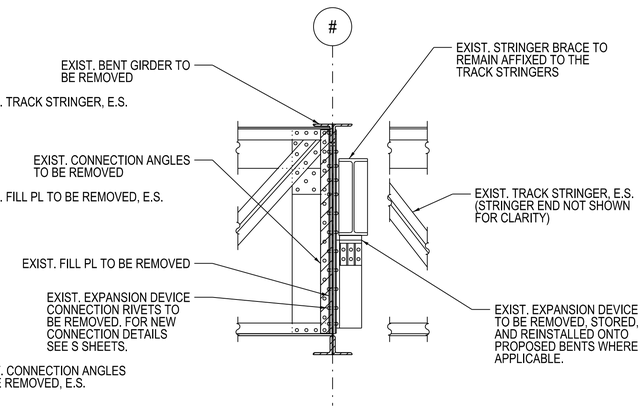

8 STRINGER CONN. REMOVAL SECTION - FIX-EXP
1/2" = 1'-0"

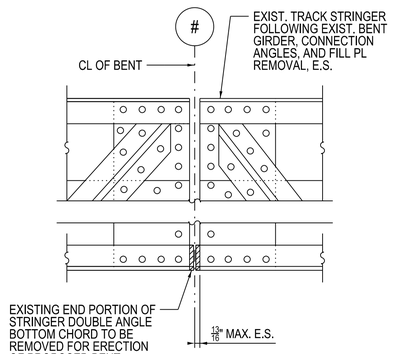

9 STRINGER BOT. CHORD REMOVAL
N.T.S.

DESIGN BY:	CMG								
DRAWN BY:	CMG	4	7/3/2023	ISSUED FOR BID					
CHECKED BY:	MDS	1	11/4/2022	PERMIT REVISION #1					
APPROVED BY:	MDS	0	9/9/2022	ISSUED FOR PERMIT					
CDOT/APPROVED BY:		NO.	DATE	REVISIONS	DES.	DRW.	CHK.	DCCO	CDOT

TRANSYSTEMS
222 SOUTH RIVERSIDE PLAZA SUITE 610
CHICAGO, ILLINOIS 60606

SKIDMORE, OWINGS & MERRILL LLP
224 SOUTH MICHIGAN AVENUE, SUITE 1000
CHICAGO, ILLINOIS 60604

CHICAGO DEPARTMENT OF TRANSPORTATION
DIVISION OF ENGINEERING

STATE / LAKE LOOP ELEVATED STATION
200 NORTH STATE STREET, CHICAGO, IL 60601

SPEC. NO.

STRUCTURAL DEMOLITION SECTIONS 3

DRAWING NO.
SD-303

CDOT PROJECT D-1-209 | DATE: 9/9/2022 | REVISION NO.

GENERAL NOTES:

1. THE STRUCTURAL DRAWINGS AND SPECIFICATIONS ARE ONE PART OF THE CONTRACT DOCUMENTS AND SHALL BE USED IN CONJUNCTION WITH THE REMAINING PARTS OF THE CONTRACT DOCUMENTS. SPECIFICATIONS HAVE BEEN ISSUED IN CONJUNCTION WITH THESE DRAWINGS. IN CASES, IF ANY, WHERE REQUIREMENTS INDICATED ON THE STRUCTURAL DRAWINGS DIFFER FROM THE SPECIFICATIONS, NOTIFY THE COMMISSIONER. FOR PRICING, ASSUME THAT THE MORE STRINGENT REQUIREMENT TAKES PRECEDENCE OVER THE SPECIFICATIONS IN THE CASE OF ANY CONFLICTS.
2. FOR STRUCTURAL DEMOLITION SHEETS, SEE SD SHEETS.
3. FOR EXISTING TRACK STRUCTURE REPAIR DETAILS, SEE SR SHEETS.
4. FOR SUGGESTED SHORING DETAILS, SEE SX SHEETS.
5. FOR ADDITIONAL NOTES ON THE CANOPY STRUCTURE, SEE SHEET S-600.
6. VERTICAL DATUM FOR THIS PROJECT IS CITY OF CHICAGO DATUM (CCD).
7. SEE CIVIL DRAWINGS FOR LOCATION OF CITY BENCHMARK WITH RESPECT TO STATION LOCATION. SEE CIVIL DRAWINGS FOR SITE ELEMENTS AWAY FROM PROJECT FOOTPRINT.
8. CENTERLINES OF COLUMNS AND FOUNDATIONS COINCIDE WITH GRID LINE INTERSECTIONS, UNLESS OTHERWISE NOTED.
9. CENTERLINES OF GRADE BEAMS AND WALLS COINCIDE WITH CENTERLINES OF FOUNDATIONS, UNLESS OTHERWISE NOTED.
10. CENTERLINES OF FRAMING MEMBERS COINCIDE WITH COLUMN CENTERLINES, UNLESS OTHERWISE NOTED.
11. ALL DETAILS, SECTIONS, AND NOTES ON THE DRAWINGS ARE INTENDED TO BE TYPICAL WHERE CONDITIONS ARE SIMILAR TO THOSE INDICATED BY DETAIL OR DETAIL TITLE OR NOTE.
12. USE ONLY DIMENSIONS INDICATED ON THE DRAWINGS. DO NOT SCALE DRAWINGS OR USE ANY DIMENSIONS FROM ELECTRONIC DRAWING FILES.
13. PRINCIPAL OPENING SIZES AND LOCATIONS ARE INDICATED ON THE DRAWINGS. ADDITIONAL, SMALLER OPENINGS, BLOCK OUTS AND SLEEVES MAY BE REQUIRED BY OTHER DISCIPLINES AND SHALL BE CONSTRUCTED USING THE CRITERIA INDICATED IN THE STRUCTURAL DOCUMENTS. IF NO DETAILS ARE APPLICABLE, THE CONTRACTOR SHALL SUBMIT PROPOSED METHOD TO THE COMMISSIONER FOR APPROVAL.
14. LATERAL LOAD RESISTANCE AND STABILITY OF THE STRUCTURE IN ITS FINAL CONDITION IS PROVIDED BY MOMENT AND BRACED FRAMES, AND LATERAL STABILITY OF OTHER ELEMENTS IS PROVIDED THROUGH FLOOR SLABS, HORIZONTAL BRACING, AND A ROOF DECK.

CONTRACTOR RESPONSIBILITIES AND COORDINATION

1. THE CONTRACTOR SHALL COMPLY WITH ALL CITY ORDINANCES AND REGULATIONS AND OBTAIN ALL NECESSARY PERMITS AND INSURANCE TO PERFORM THE WORK. THE CONTRACTOR IS ALSO RESPONSIBLE FOR OBTAINING ALL TRAFFIC PERMITS INCLUDING PROVIDING ALL REQUIRED MAINTENANCE OF TRAFFIC DOCUMENTS TO OBTAIN SUCH PERMITS. ALL COSTS AND TIME INCURRED TO OBTAIN THESE PERMITS SHALL BE CONSIDERED INCLUDED IN THE CONTRACT.
2. IT IS THE RESPONSIBILITY OF THE CONTRACTOR TO COMPLY WITH ALL APPLICABLE CITY, COUNTY, STATE, AND FEDERAL LAWS, INCLUDING THE OCCUPATIONAL SAFETY AND HEALTH ADMINISTRATION (OSHA) AND REGULATIONS ADOPTED PURSUANT THERETO.
3. THE CONTRACTOR IS TO MEET THE REQUIREMENTS FOR THE PROTECTION OF SUPPORTING ADJACENT STRUCTURES FROM THE CONSTRUCTION ACTIVITY ACCORDING TO ALL PROVISIONS OF THE CTA-ADJACENT CONSTRUCTION MANUAL.
4. THE CONTRACTOR SHALL MAKE NO DEVIATION FROM THE DESIGN DRAWINGS WITHOUT WRITTEN APPROVAL FROM THE COMMISSIONER.
5. THE CONTRACTOR SHALL VERIFY ALL DIMENSIONS AT JOB SITE BEFORE FABRICATION.
6. PLAN DIMENSIONS AND DETAILS RELATIVE TO EXISTING CONSTRUCTION ARE SUBJECT TO NOMINAL CONSTRUCTION VARIATIONS. THE CONTRACTOR SHALL FIELD VERIFY EXISTING DIMENSIONS AND DETAILS AFFECTING NEW CONSTRUCTION AND MAKE NECESSARY APPROVED ADJUSTMENTS PRIOR TO CONSTRUCTION OR ORDERING OF MATERIALS. SUCH VARIATIONS SHALL NOT BE CAUSE FOR ADDITIONAL COMPENSATION FOR A CHANGE IN SCOPE OF THE WORK.
7. THE CONTRACTOR SHALL VERIFY ALL DIMENSIONS AND ELEVATIONS, NEW AND EXISTING, BY MEASUREMENTS AND SURVEYS AT THE JOB SITE, INCLUDING BUT NOT LIMITED TO DIMENSIONS NOTED AS "VIF" ON THE CONTRACT DOCUMENTS, PRIOR TO SUBMITTAL OF ANY SHOP DRAWINGS. THE CONTRACTOR SHALL TAKE ANY AND ALL OTHER MEASUREMENTS NECESSARY TO VERIFY CONFORMANCE WITH THE DRAWINGS AND TO PERFORM THE WORK PROPERLY. THE COST OF EXPOSING EXISTING STRUCTURAL MEMBERS TO VERIFY AND MEASURE THE EXISTING CONDITIONS SHALL BE INCLUDED IN THE CONTRACTOR'S BID. THE CONTRACTOR SHALL SUBMIT TO THE COMMISSIONER DIMENSIONS NOTED "VIF" ON THE CONTRACT DOCUMENTS AT LEAST 30 DAYS PRIOR TO SUBMISSION OF SHOP DRAWINGS.
8. IT IS THE CONTRACTOR'S RESPONSIBILITY TO TAKE MEASUREMENTS IN THE FIELD OF EXISTING STRUCTURE WHEREVER NEW STEEL IS TO BE REPLACED OR CONNECTED INTO THE EXISTING MATERIAL PRIOR TO ORDERING OR FABRICATING ANY NEW STEEL. THE CONTRACTOR SHALL BE RESPONSIBLE FOR THE PROPER FITTING AND ASSEMBLY OF ALL PARTS OF THE WORK.
9. THE CONTRACTOR SHALL NOTIFY THE COMMISSIONER OF ANY DISCREPANCIES BETWEEN THE STRUCTURAL DRAWINGS, DETAILS, SPECIFICATIONS AND ANY OTHER DOCUMENTS OR EXISTING CONDITIONS FOR RESOLUTION PRIOR TO PROCEEDING WITH THE WORK. DO NOT ASSUME THAT EITHER THE DRAWINGS OR SPECIFICATIONS TAKE PRECENDENCE.
10. THE EXISTING TRACK BENT COLUMN TO COLUMN SPACING VARIES. DIMENSIONS SHOWN INDICATE THE "GRID" DIMENSIONS. THE CONTRACTOR SHALL CONDUCT THEIR OWN FIELD SURVEY TO ESTABLISH EXISTING DIMENSIONAL PARAMETERS AS RELATED TO THE DESIGN BEFORE PROCEEDING WITH THE WORK. NOTIFY THE COMMISSIONER IN WRITING OF DISCREPANCIES WHICH WILL NOT ALLOW EXECUTION OF THE DESIGN AS SHOWN.
11. THE COMPLETENESS OR ACCURACY OF THE INFORMATION SHOWN ON THE PLANS REGARDING UTILITIES AND ADJACENT STRUCTURES EITHER PUBLIC OR PRIVATE IS NOT GUARANTEED. THE CONTRACTOR SHALL MAKE THEIR OWN INVESTIGATION TO DETERMINE THE EXISTANCE, NATURE AND EXACT LOCATION OF ALL UTILITY LINES, STRUCTURES AND APPURTENANCES THAT MAY INTERFERE WITH CONSTRUCTION OPERATIONS. THE CONTRACTOR SHALL PROTECT AND TEMPORARILY RELOCATE, IF NECESSARY TO PERFORM THEIR WORK, ALL SUCH APPURTENANCES. THE COST OF THIS WORK WILL NOT BE PAID FOR SEPARATELY AND SHALL BE INCLUDED IN THE COST OF THE CONTRACT.
12. THE CONTRACTOR SHALL PROTECT EXISTING AND NEW UTILITIES BY MEANS OF BRACING AND SUPPORTING THE UTILITIES PROPERLY TO PREVENT DAMAGE, DISPLACEMENT OR CHANGE TO THE UTILITIES. THE PROTECTION OF UTILITIES AS SPECIFIED HEREIN WILL NOT BE PAID FOR SEPARATELY AND SHALL BE INCLUDED IN THE COST OF THE CONTRACT. DAMAGES SHALL BE REPAIRED OR REPLACED AT THE CONTRACTOR'S EXPENSE.
13. THE CONTRACTOR SHALL TAKE ALL NECESSARY SAFETY PRECAUTIONS TO PROTECT PEDESTRIANS AND VEHICULAR TRAFFIC AND TO PROVIDE ACCESS TO ABUTTING PROPERTY AND UTILITIES. ANY DAMAGE TO ADJACENT FACILITIES OR UTILITIES IS THE CONTRACTOR'S RESPONSIBILITY TO REPAIR TO THEIR ORIGINAL CONDITIONS AT THEIR EXPENSE.
14. THE CONTRACTOR IS RESPONSIBLE FOR THE DESIGN, INSTALLATION, AND REMOVAL OF TEMPORARY CONSTRUCTION SCAFFOLDING OVER SIDEWALKS WHEN WORKING OVERHEAD.
15. IT IS THE RESPONSIBILITY OF THE CONTRACTOR TO COORDINATE THE STRUCTURAL WORK WITH THE CIVIL, ARCHITECTURAL, MECHANICAL, AND ELECTRICAL DRAWINGS, AS WELL AS ANY OTHER APPLICABLE TRADES. IN CASE OF CONFLICT BETWEEN THE STRUCTURAL WORK AND DRAWINGS RELATED TO OTHER TRADES, THE CONTRACTOR SHALL NOTIFY THE COMMISSIONER OF ANY DISCREPANCIES FOR RESOLUTION PRIOR TO PROCEEDING WITH THE WORK.
16. THE CONTRACTOR SHALL FURNISH ALL LABOR AND MATERIALS FOR SUCCESSFUL COMPLETION OF THIS PROJECT.
17. ALL FIELDWORK SHALL BE COORDINATED AND CONTINUOUSLY SUPERVISED BY THE CONTRACTOR.
18. THE CONTRACTOR IS RESPONSIBLE FOR MONITORING ADJACENT BUILDINGS AND THE CTA STRUCTURE FOR DAMAGE AND MOVEMENT THROUGHOUT CONSTRUCTION.
19. MATERIALS AND EQUIPMENT SHALL BE STORED AND TRANSPORTED IN A MANNER SO AS NOT TO EXCEED THE ALLOWABLE LOADINGS INDICATED IN THE DRAWINGS.
20. THE CONTRACTOR SHALL VERIFY THAT CONSTRUCTION LOADS DO NOT EXCEED THE CAPACITY OF THE STRUCTURE AT THE TIME THE LOAD IS APPLIED.
21. SUBCONTRACTORS FOR EACH TRADE ARE ADVISED THAT INFORMATION PERTINENT TO THEIR WORK MAY OCCUR IN OTHER LOCATIONS OF THE CONTRACT DOCUMENTS.
22. THE SPECIFICATIONS AND STRUCTURAL DRAWINGS REPRESENT THE FINISHED STRUCTURE AND DO NOT INDICATE THE METHOD OF CONSTRUCTION UNO. WHERE STAGING IS NOTED SUGGESTIONS ARE LOCATED ON THE SUGGESTED STRUCTURAL SHORING DRAWINGS AND ARE PRELIMINARY IN NATURE AND FOR BIDDING PURPOSES ONLY. THE CONTRACTOR IS SOLELY RESPONSIBLE FOR THE MEANS, METHODS, TECHNIQUES, SEQUENCES, AND OPERATION OF THE CONSTRUCTION WORK.
23. THE CONTRACTOR IS SOLELY RESPONSIBLE FOR THE DESIGN, INSTALLATION, AND REMOVAL OF ALL TEMPORARY BRACING, EARTH RETENTION SYSTEMS, AND CONSTRUCTION SUPPORT, FOR NEW AND EXISTING STRUCTURES, AS NECESSARY TO COMPLETE THE PROJECT. NO PORTION OF THE PROJECT, WHILE UNDER CONSTRUCTION, IS INTENDED TO BE STABLE IN THE ABSENCE OF THE CONTRACTOR'S TEMPORARY BRACES AND SUPPORTS. THE CONTRACTOR SHALL RETAIN AN ILLINOIS LICENSED STRUCTURAL ENGINEER TO DESIGN ALL TEMPORARY BRACING AND CONSTRUCTION SUPPORTS. TEMPORARY BRACING AND CONSTRUCTION SUPPORT CALCULATIONS AND DRAWINGS SHALL BE SEALED BY AN ILLINOIS LICENSED STRUCTURAL ENGINEER AND SUBMITTED TO THE COMMISSIONER FOR APPROVAL.
24. THE CONTRACTOR SHALL VERIFY THAT THE PROPOSED CONSTRUCTION PROCEDURES AND SEQUENCES FOLLOW THE RECOMMENDATIONS WITHIN THE GEOTECHNICAL REPORT.
25. SHOP DRAWINGS PREPARED BY THE CONTRACTOR WILL BE REVIEWED BY THE COMMISSIONER FOR GENERAL CONFORMANCE WITH THE DESIGN CONCEPT AND CONTRACT DOCUMENTS ONLY. THE CONTRACTOR IS SOLELY RESPONSIBLE FOR DETAILS AND ACCURACY, QUANTITIES, DIMENSIONS, SELECTING FABRICATION PROCESSES, FOR MEANS AND METHODS OF CONSTRUCTION AND FOR PERFORMING WORK IN A SAFE MANNER IN COMPLIANCE WITH THE CONTRACT DOCUMENTS.
26. CONTRACTOR TO PROVIDE AS-BUILT DRAWINGS IN AUTOCAD 2010 OR NEWER FORMAT. CDOT WILL REVIEW AND APPROVE AS-BUILTS PRIOR TO FINAL PAYMENTS TO THE CONTRACTOR.
27. EXCEPT FOR TRACK STRUCTURES, ALTERNATE AND FIELD MODIFIED CONNECTIONS AND DETAILS MAY BE USED BY THE CONTRACTOR IF SUCH DETAILS ARE SUBMITTED TO THE COMMISSIONER FOR REVIEW AND ACCEPTANCE IS GRANTED. THE COMMISSIONER SHALL BE THE SOLE JUDGE OF ACCEPTABILITY. THE CONTRACTOR SHALL BE RESPONSIBLE FOR THE DESIGN OF ANY ALTERNATE AND MODIFIED DETAILS WHICH ARE BEING PROPOSED AND SHALL INCLUDE CALCULATIONS SEALED BY AN ILLINOIS LICENSED STRUCTURAL ENGINEER. THE COST OF THIS WORK WILL NOT BE PAID FOR SEPARATELY AND SHALL BE INCLUDED IN THE COST OF THE CONTRACT.

HAZARDOUS WORK MATERIALS

1. THE CONTRACTOR IS WARNED OF THE PRESENCE OF AN ELECTRIFIED CONTACT RAIL (600 VOLTS DC) AND MOVING TRAINS ON THE CTA TRACKS AND SHALL TAKE ALL NECESSARY PRECAUTIONS TO PREVENT INJURY TO PERSONNEL OR DAMAGE TO PROPERTY THROUGH CONTACT WITH ELECTRICAL AND OPERATING SYSTEMS. THE CONTRACTOR'S ATTENTION IS DIRECTED TO THE FACT THAT CONTACT WITH ELECTRIFIED CONTACT RAIL, CTA POWER CABLES, OR TRAINS MAY RESULT IN SEVERE BURNS OR DEATH.
2. ELEVATED STRUCTURE IS AT NEGATIVE RAIL POTENTIAL. AVOID CONTACT BETWEEN STRUCTURE AND EARTH GROUNDED OBJECTS SUCH AS EDISON GROUNDS, WATER, PILES, ETC.

SUGGESTED SEQUENCE OF CONSTRUCTION (TRACK STRUCTURE):

1. PRIOR TO ALL CONSTRUCTION ACTIVITIES, MIGRATE SIGNAL CABLE TO TOP OF EXISTING BENTS WITH "TYPE J" MESSENGER MOUNTING BRACKET, REPLACE AND RE-TEST IF INSUFFICIENT SLACK IN THE EXISTING CABLE. PROVIDE SUFFICIENT SLACK FOR OPERATIONS DESCRIBED IN STEP 2.
2. PRIOR TO REPLACEMENT OF A BENT, INSTALL TIMBER CABLE SUPPORTS EXTENDING PERPENDICULAR FROM THE TRACK CENTERLINE EITHER SIDE OF THE BENT BEING REPLACED. TEMPORARILY SUPPORT THE SIGNAL CABLE ABOVE THE WORK AREA AND PROTECT WITH CABLE GUARD.
3. CONSTRUCT NEW VAULT WALLS AND LIDS AT THE LOCATIONS SHOWN ON THE PLANS.
4. PERFORM ALL REPAIRS TO THE EXISTING TRACK SUPERSTRUCTURE.
5. CONSTRUCT FOUNDATIONS FOR THE ELEVATOR AND ESCALATOR TOWERS AND THE ESCALATOR PIT.
6. REMOVE AND REPLACE BENTS. BENTS WILL BE REPLACED SUCH THAT NO TWO ADJACENT BENTS ARE TEMPORARILY SHORED AT THE SAME TIME. THE SUGGESTED SEQUENCE OF CONSTRUCTION FOR A SINGLE BENT IS AS FOLLOWS:
   a. REDUCE TRAFFIC ON LAKE STREET TO ONE LANE AND PLACE TEMPORARY SHORING TOWERS IN THE OTHER LANE AND THE PARKING LANE. FOR BENTS WHERE THE PROPOSED FOUNDATION IS NOT IN THE SAME LOCATION AS THE EXISTING FOUNDATION, CONSTRUCTION OF THE PROPOSED FOUNDATION MAY BEGIN. FOR SUGGESTED SHORING DETAILS, SEE SX SHEETS.
   b. SHORE THE EXISTING TRACK STRINGERS ON EITHER SIDE OF THE EXISTING BENT AND DISCONNECT THE EXISTING TRACK STRINGERS FROM THE EXISTING BENT. EXISTING EXPANSION DEVICES SHALL BE TEMPORARILY STORED.
   c. REMOVE EXISTING COLUMNS, LATERAL BRACING AND BENT GIRDER. THE EXISTING FOUNDATION IS TO BE LEFT IN PLACE AND BURIED, BUT PARTIALLY REMOVED AS NECESSARY TO ALLOW FOR CONSTRUCTION OF PROPOSED ELEMENTS. FOR DEMOLITION DETAILS, SEE SD SHEETS.
   d. COMPLETE CONSTRUCTION OF PROPOSED FOUNDATIONS.
   e. SLIDE MIDDLE SEGMENT OF PROPOSED BENT GIRDER INTO PLACE AND ATTACH TO EXISTING TRACK STRINGERS.
   f. SPLICE END SEGMENTS OF PROPOSED BENT TO MIDDLE SEGMENT. CONSTRUCT PROPOSED COLUMNS, AND INSTALL NEW LATERAL BRACING AND CROSS FRAMES.
   g. REMOVE TEMPORARY SHORING TOWERS AND REOPEN LAKE STREET TO FULL TRAFFIC.
7. CONSTRUCT NEW THRU PLATE GIRDER BETWEEN BENTS 443 AND 445. BENT 444 CANNOT BE REPLACED UNTIL AFTER THE THRU PLATE GIRDER IS ERECTED.
8. REMOVE AND REPLACE TRACK STRINGERS BETWEEN BENTS 447 AND 449. THE REPLACEMENT OF THE TRACK STRINGERS OVER STATE WILL BE DONE DURING A FULL WEEKEND CLOSURE OF THE CTA TRACKS. THE SUGGESTED SEQUENCE OF CONSTRUCTION FOR THE REPLACEMENT OF THE TRACK SUPERSTRUCTURE IS AS FOLLOWS:
   a. REPLACEMENT OF BENTS 447 AND 449 ARE COMPLETED.
   b. REDUCE TRAFFIC ON STATE STREET TO ONE LANE IN EACH DIRECTION FOR CONSTRUCTION ZONE.
   c. CONSTRUCT THE FOUR TRACK GIRDERS, TIES, RAIL AND OTHER SUPERSTRUCTURE ELEMENTS ON THE GROUND WITHIN THE WORK ZONE ON STATE STREET.
   d. BEGIN FULL WEEKEND CLOSURE OF THE CTA TRACKS, STATE STREET, AND LAKE STREET.
   e. REMOVE THE EXISTING TRACK STRINGERS, LATERAL BRACING, RAILS, AND TIES BETWEEN BENTS 447 AND 449 AND COMPLETELY REMOVE BENT GIRDER AND COLUMNS FOR BENT 448. THE EXISTING FOUNDATION IS TO BE LEFT IN PLACE AND BURIED. FOR DEMOLITION DETAILS, SEE SD SHEETS.
   f. MOVE AND LIFT THE PROPOSED SUPERSTRUCTURE INTO PLACE AND CONNECT TO BENTS 447 AND 449.
   g. PERFORM CTA SIGNAL AND RAIL TESTING FOR NEW TRACK.
   h. REOPEN BOTH STATE STREET AND LAKE STREET TO FULL TRAFFIC AND RESUME CTA SERVICE.
9. MIGRATE SIGNAL CABLE TO TOP OF NEW BENTS ON NEW "TYPE J" MESSENGER BRACKETS. REMOVE TEMPORARY CABLE SUPPORTS.
10. CONSTRUCT PLATFORM, ELECTRICAL AND COMMUNICATION ROOMS, AND EXIT STAIRS.
11. CONSTRUCT CANOPY ABOVE. SEE CANOPY NOTES (S-600, S-610, AND S-620) FOR SEQUENCE.
12. THE ABOVE SEQUENCE PROVIDES ONE POTENTIAL MEANS OF PROSECUTING THE CONSTRUCTION WORK AND IS NOT INTENDED TO PROVIDE DIRECTION OF SPECIFIC MEANS OR METHODS TO THE CONTRACTOR.
13. THE REQUIREMENTS OF THE SPECIFICATIONS, CONTRACT, AND SHEET G-110 GOVERN OVER THIS SHEET.

DESIGN SPECIFICATIONS

1. CHICAGO TRANSIT AUTHORITY (CTA) INFRASTRUCTURE DESIGN CRITERIA MANUAL, EFFECTIVE FEBRUARY 2017
2. CHICAGO TRANSIT AUTHORITY (CTA) ADJACENT CONSTRUCTION MANUAL REVISION 01, DATED MARCH 2022.
2. AMERICAN RAILWAY ENGINEERING AND MAINTENANCE OF WAY ASSOCIATION (AREMA) MANUAL OF RAILWAY ENGINEERING 2020.
3. AASHTO LRFD BRIDGE DESIGN SPECIFICATIONS, 8TH EDITION
4. CHICAGO BUILDING CODE (CBC) 2019
5. AMERICAN INSTITUTE OF STEEL CONSTRUCTION (AISC) SPECIFICATIONS FOR STRUCTURAL STEEL BUILDINGS (ANSI/AISC 360) 2016
6. AMERICAN CONCRETE INSTITUTE (ACI) BUILDING CODE REQUIREMENTS FOR STRUCTURAL CONCRETE (ACI 318-14)
7. AMERICAN SOCIETY OF CIVIL ENGINEERS (ASCE) MINIMUM DESIGN LOADS AND ASSOCIATED CRITERIA FOR BUILDINGS AND OTHER STRUCTURES (ASCE 7-16)

MATERIAL DESIGN STRENGTHS

1. MATERIAL DESIGN STRENGTHS SHALL BE PER THE LIST BELOW UNLESS NOTED OTHERWISE:

a.	STRUCTURAL STEEL:	fy = 36,000 PSI (FOR ASTM A36 STEEL) fy = 50,000 PSI (FOR ASTM A709, A992, A572 GRADE 50, A500 GRADE C STEEL)
b.	ANCHOR RODS:	fy = 36,000 PSI (STATION HOUSE)
c.	ANCHOR BOLTS:	fy = 55,000 PSI (BENTS)
d.	REINFORCED CONCRETE:	f'c = 6,000 PSI (CONCRETE) fy = 60,000 PSI (REINFORCING STEEL) fy = 65,000 PSI (WELDED WIRE FABRIC)
e.	DRILLED SHAFTS:	f'c = 6,000 PSI (CONCRETE) fy = 60,000 PSI (REINFORCING STEEL)
f.	MICROPILES	f'c = 5,000 PSI (GROUT) fy = 80,000 PSI (API 5CT N80 PIPE) fy = 120,000 PSI (ASTM A722 GRADE 150 THREAD BAR)
g.	FOUNDATIONS:	qu = 2,500 PSF (SHALLOW BELOW GRADE FOUNDATIONS) qu = 20,000 PSF (MEDIUM DEPTH SOIL BEARING FOUNDATIONS) qu = 200,000 PSF (DEEP FOUNDATIONS - BEDROCK)
h.	TEMPORARY SHORING	qu = 2,500 PSF

DESIGN BY:	WJC										
DRAWN BY:	ESS										
CHECKED BY:	MDS										
APPROVED BY:	WJC	4	7/3/2023	ISSUED FOR BID							
CDOT/APPROVED BY:		NO.	DATE	REVISIONS	DES.	DRW.	CHK.	DCCO	CDOT		

TRANSYSTEMS
222 SOUTH RIVERSIDE PLAZA SUITE 610
CHICAGO, ILLINOIS 60606

SKIDMORE, OWINGS & MERRILL LLP
224 SOUTH MICHIGAN AVENUE, SUITE 1000
CHICAGO, ILLINOIS 60604

CHICAGO DEPARTMENT OF TRANSPORTATION
DIVISION OF ENGINEERING

STATE / LAKE LOOP ELEVATED STATION
200 NORTH STATE STREET, CHICAGO, IL 60601

SPEC. NO.

STRUCTURAL NOTES 1

DRAWING NO.
S-001

CDOT PROJECT D-1-209

DATE: 7/3/2023

REVISION NO.

STRUCTURAL STEEL

1. THE MANUFACTURE, DETAILS, FABRICATION, DELIVERY AND ERECTION OF ALL STRUCTURAL STEEL FRAMING SHALL CONFORM TO AISC "SPECIFICATION FOR STRUCTURAL STEEL BUILDINGS".

2. COMPLY WITH ALL APPLICABLE PROVISIONS OF AISC SPECIFICATION 360-16. ALL STRUCTURAL STEEL FABRICATION AND ERECTION SHALL CONFORM TO AISC CODE OF STANDARD PRACTICE, 303-16.

3. PROVIDE STRUCTURAL STEEL CONFORMING TO THE FOLLOWING STANDARDS FOR THE TRACK SUPPORTING STRUCTURE, UNO:

STRUCTURAL STEEL W SHAPES	ASTM A709, GRADE 50
STRUCTURAL STEEL CHANNELS, ANGLES	ASTM A709, GRADE 50 UNO
SHIM PLATES, GUSSET PLATES	ASTM A36, GRADE 36 MINIMUM UNO
PLATE FOR BENT COLUMNS, GIRDERS, AND STIFFENERS	ASTM A709, GRADE 50
BUILT-UP SHAPES	ASTM A709, GRADE 50
ANCHOR BOLTS	ASTM F1554, GRADE 55
BEAM AND COLUMN HEADED STUDS	ASTM A108, GRADE 1010-1020

4. PROVIDE STRUCTURAL STEEL CONFORMING TO THE FOLLOWING STANDARDS FOR ALL OTHER STRUCTURE, UNO:

STRUCTURAL STEEL W SHAPES	ASTM A992, GRADE 50
STRUCTURAL STEEL CHANNELS, ANGLES	ASTM A36, GRADE 36 UNO
BUILT-UP SHAPES (BOXES AND I-SHAPES)	ASTM A572, GRADE 50
SHIM PLATES, GUSSET PLATES, STIFFENER PLATES	ASTM A36, GRADE 36 UNO
HOLLOW STRUCTURAL SECTION	ASTM A500, GRADE C
PIPE	ASTM A53, GRADE B
ANCHOR BOLTS	ASTM F1554, GRADE 55
HEADED STUDS	ASTM A108, GRADE 1010-1020

SEE CANOPY NOTES ON SHEET S-600 FOR ADDITIONAL MATERIAL DESIGN STRENGTHS.

5. WHERE NO CAMBER IS INDICATED, BEAMS SHALL BE FABRICATED SO THAT AFTER ERECTION, ANY NATURAL CAMBER IS UPWARD.

6. BEARING SURFACES OF ALL COLUMNS SHALL BE FINISHED FOR FULL BEARING CONTACT OR WELDS SHALL BE DESIGNED TO TRANSMIT ALL AXIAL COMPRESSION.

7. FIELD MODIFICATION OF TRACK STRUCTURAL STEEL IS PROHIBITED WITHOUT PRIOR WRITTEN APPROVAL OF THE COMMISSIONER. ALL COPES, HOLES, OPENINGS, AND MODIFICATIONS REQUIRED IN ALL OTHER STRUCTURAL STEEL MEMBERS FOR ERECTION OR THE WORK OF OTHER TRADES SHALL BE SHOWN ON THE SHOP DRAWINGS FOR APPROVAL BY THE COMMISSIONER. BURNING OF HOLES OR MAKING CUTS IN STRUCTURAL STEEL MEMBERS IN THE FIELD WILL NOT BE PERMITTED EXCEPT BY THE WRITTEN PERMISSION OF THE COMMISSIONER.

8. SPLICING STRUCTURAL MEMBERS WHERE NOT DETAILED ON STRUCTURAL DRAWINGS IS PROHIBITED WITHOUT PRIOR ACCEPTANCE BY THE COMMISSIONER.

9. DO NOT SHORE STEEL BEAMS AND/OR STEEL DECK WITHOUT IMPLEMENTING A SHORING PLAN. SUPPORT FORMWORK FOR FLAT SOFFIT SLABS FROM STEEL BEAMS THAT DIRECTLY SUPPORT SLAB BEING FORMED. DESIGN AND DETAIL FORMWORK FOR FLAT SLABS FROM STEEL BEAMS THAT DIRECTLY SUPPORT SLAB BEING FORMED. DESIGN AND DETAIL FORMWORK FOR FLAT SLABS TO CONTINUOUSLY BRACE TOP FLANGE OF STEEL BEAMS FROM LATERAL MOVEMENT DURING CONSTRUCTION OF SLAB. ROOF SLABS SHALL BE CONSTRUCTED TO THE ELEVATIONS SPECIFIED.

10. FOR ALL STEEL FINISH REQUIREMENTS, REFER TO ARCHITECTURAL DOCUMENTS AND SPECIFICATIONS.

11. THE STRUCTURAL STEEL CONTRACTOR SHALL VERIFY THE FOUNDATION CONSTRUCTION FOR ANCHOR BOLT LOCATION, ELEVATION OF TOP OF CONCRETE AND BEARING PLATES, ALIGNMENT, ETC, PRIOR TO START OF ERECTION.

12. CONTRACTOR SHALL GROUT UNDER ALL COLUMN BASE PLATES WITH AN APPROVED NONSHRINK GROUT AFTER COLUMNS ARE SET AND PLUMBED AND PRIOR TO CONNECTION TO TRACK SUPPORTING STRUCTURE.

13. STRUCTURAL STEEL CONTRACTOR MUST COORDINATE THE FINAL SIZE AND LOCATION OF MECHANICAL UNITS WITH MECHANICAL AND ARCHITECTURAL DRAWINGS.

14. STRUCTURAL STEEL CONTRACTOR SHALL FURNISH AND INSTALL ANGLE FRAMING AROUND OPENINGS AND UNDER CURBS OF ALL EQUIPMENT AS PER MECHANICAL DRAWINGS, EVEN IF NOT SHOWN ON STRUCTURAL DRAWINGS. ALL SUPPLEMENTAL STEEL SHALL BE HOT DIP GALVANIZED UNO.

15. DISTRIBUTE STEEL STUDS UNIFORMLY OVER BEAM SPAN UNLESS OTHERWISE NOTED ON DRAWINGS. MAXIMUM SPACING OF ¾ INCH HEADED STUDS SHALL NOT EXCEED 12" ON CENTER (ONE STUD PER FOOT) UNLESS OTHERWISE NOTED ON PLAN.

16. PROVIDE HOLES IN ALL STEEL AS REQUIRED TO PREVENT ANY ACCUMULATION OF WATER. ALL PENETRATIONS THROUGH MAIN MEMBERS SHALL NOT EXCEED 1 1/8" DIAMETER AND SHALL BE GROUND SMOOTH. THESE DRAINS MUST BE KEPT OPEN AND CLEAN.

17. ERECT AND MAINTAIN TEMPORARY BRACING TO INSURE THE ALIGNMENT AND STABILITY OF THE STRUCTURE DURING ERECTION UNTIL PERMANENT CONNECTIONS HAVE BEEN COMPLETED.

18. ALL PROPOSED STRUCTURAL STEEL FOR THE TRACK STRUCTURE SHALL BE HOT-DIP GALVANIZED AFTER FABRICATION CONFORMING TO THE REQUIREMENTS OF ASTM A123.

19. THE COLOR OF THE FINAL FINISH COAT FOR THE BENT, TRACK STRINGER, AND PLATFORM STRUCTURAL STEEL SHALL BE CITY OF CHICAGO BORDEAUX. PAINT COLOR SHALL MATCH FOR NEW AND EXISTING TRACK STRINGER STRUCTURAL STEEL. THE COLOR OF THE FINAL FINISH COAT FOR THE CANOPY STRUCTURAL STEEL SHALL BE CTA STANDARD WHITE FEDERAL STANDARD NO. 595(b) COLOR NUMBER 27722 HIGH GLOSS. SEE SPECIFICATIONS FOR HIGH-PERFORMANCE COATINGS. SEE CANOPY DRAWINGS FOR SPECIAL CANOPY FINISH REQUIREMENTS.

20. THE EXISTING STRUCTURAL STEEL BETWEEN BENTS 442 AND 457 SHALL BE CLEANED AND PAINTED. METHOD NO. 6, SSPC-SP 6, COMMERCIAL BLAST CLEANING, SHALL BE USED TO CLEAN EXISTING STRUCTURAL STEEL. SEE THE SPECIFICATIONS FOR CLEANING AND PAINTING OF EXISTING SURFACES.

21. THE EXISTING STRUCTURE CONTAINS LEAD. SEE SPECIFICATIONS FOR LEAD ABATEMENT PROCEDURES.

22. PROPOSED BENT CROSS GIRDERS, COLUMNS, STIFFENERS, STAIR SUPPORTING BEAMS, SPLICES, STRINGER CONNECTIONS, AND BENT CONNECTIONS SHALL BE ASSEMBLED AT THE FABRICATION PLANT AFTER GALVANIZING FOR EACH BENT. PARTS OF A BENT SHALL BE ASSEMBLED, WELL PINNED AND/OR FIRMLY DRAWN TOGETHER WITH BOLTS BEFORE REAMING OR TIGHTENING OF FASTENERS IS COMMENCED. EACH BENT AND ITS PARTS SHALL BE FREE FROM TWISTS, BENDS, AND OTHER DEFORMATIONS THAT WOULD PREVENT ERECTION OF BENT IN THE FIELD AND/OR ANY OF THE SUGGESTED SEQUENCE OF CONSTRUCTION (TRACK STRUCTURE) FROM OCCURING.

23. PROPOSED TRACK STRINGERS, STIFFENERS, LATERAL BRACING AND CROSS FRAMES BETWEEN STRINGERS, AND END CONNECTIONS SHALL BE ASSEMBLED AT THE FABRICATION PLANT AFTER GALVANIZING. THESE PARTS SHALL BE ASSEMBLED, WELL PINNED AND/OR FIRMLY DRAWN TOGETHER WITH BOLTS BEFORE REAMING OR TIGHTENING OF FASTENERS IS COMMENCED. THE TRACK STRINGERS AND THEIR PARTS SHALL BE FREE FROM TWISTS, BENDS, AND OTHER DEFORMATIONS THAT WOULD PREVENT THEIR ERECTION IN THE FIELD AND/OR ANY OF THE SUGGESTED SEQUENCE OF CONSTRUCTION (TRACK STRUCTURE) FROM OCCURING.

24. PROPOSED THRU-PLATE GIRDER, STIFFENERS, AND END CONNECTIONS SHALL BE ASSEMBLED AT THE FABRICATION PLANT AFTER GALVANIZING. THESE PARTS SHALL BE ASSEMBLED, WELL PINNED AND/OR FIRMLY DRAWN TOGETHER WITH BOLTS BEFORE REAMING OR TIGHTENING OF FASTENERS IS COMMENCED. THE THRU-PLATE GIRDER AND ITS PARTS SHALL BE FREE FROM TWISTS, BENDS, AND OTHER DEFORMATIONS THAT WOULD PREVENT ITS ERECTION IN THE FIELD AND/OR ANY OF THE SUGGESTED SEQUENCE OF CONSTRUCTION (TRACK STRUCTURE) FROM OCCURING.

STRUCTURAL STEEL CONNECTIONS

1. BOLTED STRUCTURAL CONNECTIONS SHALL CONFORM TO AISC "SPECIFICATION FOR STRUCTURAL JOINTS USING HIGH-STRENGTH BOLTS".

2. ALL STEEL CONNECTIONS SHALL BE IN ACCORDANCE WITH THE REQUIREMENTS OF "SPECIFICATION FOR STRUCTURAL STEEL BUILDINGS", AISC-LOAD AND RESISTANCE FACTOR DESIGN.

3. PROVIDE STRUCTURAL STEEL CONNECTION MATERIAL FOR THE TRACK SUPPORTING STRUCTURE, UNO:

WT'S	ASTM A709, GRADE 50
BOLTS	ASTM F3125, GRADE A325, UNO (A490 PROHIBITED)
NUTS	ASTM A563
WASHERS	ASTM F436
WELD ELECTRODES	E70XX (FIELD WELDS NOT PERMITTED)

MIN BOLT SIZE FOR TRACK SUPPORT STEEL = 7/8" DIA. (15/16" DIA. BOLT HOLES)

4. PROVIDE STRUCTURAL STEEL CONNECTION MATERIAL FOR ALL OTHER STRUCTURE, UNO:

WT'S	ASTM A992, GRADE 50
BOLTS	ASTM F3125, GRADE A325 (A490 PROHIBITED)
NUTS	ASTM A563
WASHERS	ASTM F436
WELD ELECTRODES	E70XX

MIN BOLT SIZE ELSE = 3/4" DIA.

5. ALL CONNECTION DETAILS SHALL BE FIELD VERIFIED BY THE CONTRACTOR. ANY DIMENSIONAL DEVIATION OR CONNECTION SUBSTITUTION FROM THE DOCUMENTS SHALL REQUIRE THE CONTRACTOR TO SUBMIT DESIGN AND DETAIL BY AN ILLINOIS LICENSED STRUCTURAL ENGINEER FOR REVIEW AND ACCEPTANCE BY THE COMMISSIONER. THE DESIGN AND DETAILING SHALL COMPLY WITH ALL APPLICABLE CODES AND SPECIFICATION SECTIONS.

6. FIELD WELDS ARE ONLY ALLOWED AS SPECIFICALLY INDICATED AS SUCH ON THE PLANS.

7. FIELD WELDING ON TRACK SUPPORTING STRUCTURE SHALL NOT BE PERMITTED. ALL FIELD CONNECTIONS WITH TRACK SUPPORTING STRUCTURE SHALL BE BOLTED.

8. FOR CONNECTION DESIGN AND DETAILING, SET CONNECTION WORK POINT AT INTERSECTION OF MEMBER CENTERLINES, UNLESS NOTED OTHERWISE.

9. ALL BOLTED CONNECTIONS SHALL BE SLIP-CRITICAL CLASS B CONNECTIONS, UNLESS OTHERWISE NOTED.

10. EACH SHEAR CONNECTION SHALL HAVE A MINIMUM OF TWO BOLTS, THREE BOLTS IF LOCATED AT TRACK SUPPORTING STRUCTURE.

11. WELDING SHALL CONFORM TO STANDARDS OF AWS D1.5 FOR TRACK SUPPORTING STRUCTURE (OR AWS D1.1 ELSEWHERE). ELECTRODES FOR FIELD AND SHOP WELDING SHALL BE E70XX AND SHALL CONFORM TO AWS RECOMMENDATIONS. WELDS NOT INDICATED SHALL BE AWS MINIMUM. FOLLOW PREHEAT REQUIREMENTS OF AWS. LOW HYDROGEN ELECTRODES MAY BE UTILIZED TO MINIMIZE THE USE OF PREHEAT. USE LOW HYDROGEN ELECTRODES FOR WELDING TO CONCRETE EMBEDMENT PLATES OR OTHER STRUCTURAL STEEL ELEMENT IN CONTACT WITH CONCRETE OR MASONRY.

12. UNLESS OTHERWISE NOTED, ALL WELDS SHALL BE CONTINUOUS ¼" MINIMUM FILLET WELDS FOR ALL MISC. STEEL SHOWN ON ARCH/MECH/ELECT. DRAWINGS.

13. UNLESS OTHERWISE NOTED, DETAILS INDICATED ON DRAWINGS DO NOT SHOW ERECTION AIDS. PROVIDE ERECTION AIDS AS REQUIRED AND REMOVE THEM AFTER WORK IS COMPLETE.

14. EXCEPT WHERE SLIP-CRITICAL BOLTS ARE SHOWN ON THE DRAWINGS, ALL HIGH-STRENGTH BOLTS SHALL BE INSTALLED AS FULL PRETENSIONED BOLTS.

15. ELEMENTS SHALL BE SHOP FABRICATED TO THE GREATEST EXTENT POSSIBLE AND SHIPPED PROTECTED TO REDUCE FIELD WELDING AND FIELD TOUCH UP.

16. ALL BOLTS SHALL BE HOT-DIP GALVANIZED CONFORMING TO THE REQUIREMENTS OF ASTM A153.

17. WHERE ACCESSIBLE, CLEAN FAYING SURFACES OF THE EXISTING STEEL ACCORDING TO THE REQUIREMENTS FOR POWER TOOL CLEANING, SSPC-SP3. COAT FAYING SURFACE WITH PRIMER AFTER CLEANING.

FRACTURE CRITICAL

1. FRACTURE CRITICAL MEMBERS AND CONNECTIONS ARE DENOTED ON DRAWINGS (FCM) AND ARE DEFINED AS FOLLOWS:

   TRACK BENT CROSS GIRDERS, TRACK-SUPPORTING BUILT UP SHAPES AND END CONNECTIONS
   TRACK BENT EXPANSION JOINT SEAT CONNECTION AND ITS COMPONENTS
   CANOPY DOME STRUCTURE TENSION TIE GIRDERS

2. ALL FRACTURE CRITICAL MEMBER WELDS SHALL BE FABRICATED IN ACCORDANCE WITH AWS D1.5 AND CHAPTER 12.

3. ALL FRACTURE CRITICAL MEMBERS AND COMPONENTS SHALL MEET THE REQUIREMENTS OF AREMA CHAPTER 15, SECTION 1.14, FRACTURE CONTROL PLAN FOR FRACTURE CRITICAL MEMBERS.

4. ALL FRACTURE CRITICAL MATERIALS SHALL MEET CHARPY V-NOTCH IMPACT TEST REQUIREMENTS FOR A MIN. SERVICE TEMPERATURE OF -30° F (SEE AREMA REFERENCE TABLE 15.1.14) UNO.

FOUNDATIONS

1. THE FOUNDATION DESIGN IS BASED ON THE STRUCTURAL GEOTECHNICAL REPORT BY GSG CONSULTANTS, INC. DATED 12/03/2021 AND THE GEOTECHNICAL DESIGN MEMORANDUM DATED 6/9/2022. RECOMMENDATIONS PREPARED THEREIN MUST BE READ THROUGH AND THOROUGHLY STUDIED BY THE CONTRACTOR BEFORE PROCEEDING WITH ANY FOUNDATION WORK INCLUDING SIRE PREPARATION, EXCAVATION, AND MINIMUM EXTERIOR FOOTING DEPTH. BOTTOM OF ALL FOUNDATIONS SHALL BE INSPECTED BY A REGISTERED SOILS ENGINEER AND DESIGN BEARING CAPACITY VERIFIED BEFORE PLACING ANY CONCRETE.

2. THE CONTRACTOR SHALL BE RESPONSIBLE TO ADEQUATELY PROTECT ALL EXCAVATION. WHERE NECESSARY, THE CONTRACTOR SHALL SUBMIT A TEMPORARY SOIL RETENTION SYSTEM DESIGN INCLUDING PLAN DETAILS AND CALCULATIONS BY AN ILLINOIS LICENSED STRUCTURAL ENGINEER FOR REVIEW AND ACCEPTANCE BY THE COMMISSIONER.

3. ALL MICROPILES WITHIN 25 FEET OF NEIGHBORING STRUCTURES AND EXISTING UTILITIES SHALL BE PRE-AUGURED DOWN TO A MINIMUM DEPTH OF 20 FEET OR THE LOWEST LEVEL OF THE ADJACENT STRUCTURE, WHICHEVER IS DEEPER. THE PILE INSTALLER SHALL SUBMIT A VIBRATION CONTROL AND MONITORING PLAN TO THE COMMISSIONER PRIOR TO THE START OF CONSTRUCTION.

4. OBSTRUCTIONS TO THE DRILLED SHAFT AND MICROPILE DRILLING PROCEDURES ARE ANTICIPATED TO BE ENCOUNTERED. PRE-AUGURING THROUGH FILL OR EXCAVATION TO REMOVE THE OBSTRUCTION SHOULD BE PERFORMED AS NECESSARY TO FACILITATE SHAFT AND PILE INSTALLATION.

5. REFER TO GEOTECHNICAL REPORT FOR ANTICIPATED GROUND WATER TABLE CONDITIONS AND ELEVATIONS.

6. PILE LOAD TESTING SHALL BE PERFORMED ACCORDING TO THE SPECIFICATIONS. REPORTS SHALL BE ISSUED FOR ALL TEST PILES. SEE SPECIFICATION FOR REQUIREMENTS.

7. CONTRACTOR SHALL TAKE ALL STEPS NECESSARY TO ENSURE THAT EXCAVATION SHALL NOT UNDERMINE ADJACENT EXISTING BUILDING FOUNDATIONS TO REMAIN, AND THAT EXISTING FOUNDATIONS ARE PROTECTED FROM SETTLEMENT ASSOCIATED WITH CONSTRUCTION ACTIVITIES.

8. PERMANENT CASING SHALL BE REQUIRED AT ALL DRILLED SHAFT LOCATIONS. REFER TO THE SPECIFICATIONS FOR THE REQUIRED DEPTH AND THICKNESS OF THE PERMANENT CASING. THE USE OF TEMPORARY CASING OR ALTERNATE METHODS WILL NOT BE PERMITTED WITHOUT WRITTEN APPROVAL FROM THE COMMISSIONER.

9. FOR MORE INFORMATION ON THE DRILLED SHAFTS AND MICROPILES, SEE THE SPECIFICATIONS.

10. THE CONTRACTOR IS RESPONSIBLE FOR THE REMOVAL, RELOCATION, AND REINSTALLATION OF THE EXISTING MONUMENT LOCATED IN THE MEDIAN OF STATE STREET NORTH OF LAKE STREET TO A LOCATION DETERMINED BY OTHERS WITHIN ONE MILE AS SPECIFIED BY CDOT. THE CONTRACTOR SHALL PREPARE DRAWINGS AND CALCULATIONS FOR THE FOUNDATION DESIGN AND ALL OTHER MEANS AND METHODS SEALED BY AN ILLINOIS LICENSED STRUCTURAL ENGINEER AND SUBMIT TO THE COMMISSIONER FOR APPROVAL.

11. APPROVED BACKFILL MATERIAL UNDER SLABS ON GROUND SHALL BE PLACED IN LAYERS NOT EXCEEDING 8 INCHES IN LOOSE THICKNESS AND COMPACTED TO A MINIMUM OF 95% OF THE MAXIMUM DENSITY OBTAINED IN ACCORDANCE WITH ASTM D 1557, MODIFIED PROCTOR METHOD.

CAST-IN-PLACE CONCRETE

1. CONFORM TO REQUIREMENTS OF STRUCTURAL CONCRETE: "BUILDING CODE REQUIREMENTS FOR STRUCTURAL CONCRETE (ACI 318-14)" AND REQUIREMENTS OF AREMA (2020). PLACE CONCRETE IN ACCORDANCE WITH ACI 301.

2. SEE ARCHITECTURAL DRAWINGS FOR BLOCKOUTS, GROOVES, AND OTHER SURFACE TREATMENTS. SEE ARCHITECTURAL, MECHANICAL, ELECTRICAL, AND PLUMBING DRAWINGS FOR FLOOR DEPRESSIONS, PADS, SLEEVES, CURBS, EMBEDMENTS, AND INSERTS.

3. SEE SPECIFICATIONS AND ARCHITECTURAL DRAWINGS FOR CONCRETE FINISHES, SURFACE HARDENERS, AND SEALERS.

4. ALL CONCRETE FOR STRUCTURES SHALL BE AIR-ENTRAINED 6.0% +/- 1.5%.

5. THE CONCRETE CLEAR COVER OVER THE STEEL REINFORCEMENT SHALL BE 2" UNLESS NOTED OTHERWISE. THE CONCRETE CLEAR COVER OVER THE STEEL REINFORCEMENT AGAINST EARTH SHALL BE 3" UNLESS NOTED OTHERWISE.

6. ALL ANCHOR RODS SHALL BE CAST-IN-PLACE. DRILLED-IN EPOXY-TYPE ANCHOR RODS ARE NOT PERMITTED.

7. TOP OF ALL CONCRETE PEDESTALS SHALL SLOPE AWAY FROM EDGES OF ISOLATION PADS FOR POSITIVE DRAINAGE.

8. ALL EXPOSED CONCRETE EDGES SHALL BE CHAMFERED ¾".

9. UNLESS OTHERWISE NOTED, NO CONCRETE SHALL BE PLACED UNTIL ALL REINFORCEMENT INDICATED ON THE DRAWINGS IS IN PLACE, TIED, AND INSPECTED.

10. CONDUITS AND PIPE OF ALUMINUM MUST NOT BE EMBEDDED IN STRUCTURAL CONCRETE UNLESS EFFECTIVELY COATED TO PREVENT ALUMINUM-CONCRETE REACTION OR ELECTROLYTIC ACTION BETWEEN ALUMINUM AND STEEL.

11. ALL CONCRETE PADS SHALL BE PLACED ON COMPACTED GRANULAR FILL.

12. NON-SHRINK GROUT FOR BASE PLATES, SLEEVES, AND EMBEDDED STEEL: GROUT SHALL BE AN APPROVED NON-SHRINK CEMENTITIOUS GROUT CONTAINING NATURAL AGGREGATES DELIVERED TO THE JOB SITE IN FACTORY PRE-PACKAGED CONTAINERS REQUIRING ONLY THE ADDITION OF WATER. THE MINIMUM 28-DAY COMPRESSIVE STRENGTH SHALL BE AT LEAST 1,000 PSI HIGHER THAN THE SUPPORTING CONCRETE STRENGTH, UNLESS NOTED OTHERWISE. GROUT SHALL BE MIXED, APPLIED, AND CURED STRICTLY IN ACCORDANCE WITH THE MANUFACTURER'S PRINTED INSTRUCTIONS. FOR GROUTING UNDER BASE PLATES, GROUT SHALL BE PROPORTIONED AS A FLOWABLE MIX. WHEN A FLOWABLE MIX DOES NOT PROVIDE THE REQUIRED STRENGTH OR WHEN A MINIMUM STRENGTH OF 10,000 PSI IS REQUIRED, AN EPOXY GROUT SHALL BE USED.

13. ALL CONSTRUCTION, CONTROL, AND ISOLATION JOINTS FOR SLABS ON GRADE SHALL BE IN ACCORDANCE WITH THE TYPICAL SLAB ON GRADE DETAILS. THE CONTRACTOR SHALL SUBMIT THE PROPOSED LOCATIONS OF CONSTRUCTION JOINTS TO THE COMMISSIONER FOR ACCEPTANCE BEFORE STARTING CONSTRUCTION.

REINFORCEMENT

1. PROVIDE REINFORCEMENT IN ACCORDANCE WITH THE FOLLOWING STANDARDS AND MATERIAL PROPERTIES:

a.	DEFORMED BARS	ASTM A615, GRADE 60
b.	WELDED WIRE FABRIC	ASTM A185

2. REINFORCEMENT BARS DESIGNATED (E) SHALL BE EPOXY COATED.

3. ALL LAP SPLICES ARE TO BE ACI STANDARD CLASS B TENSION LAP SPLICES. WHERE BARS OF DIFFERENT SIZES LAP, PROVIDE LAP SPLICE LENGTH FOR LARGER BAR.

4. WHERE TWO BARS ARE GRAPHICALLY INDICATED TO LAP, PROVIDE ACI STANDARD CLASS B TENSION LAP SPLICE EVEN IF LESS THAN 100% OF BARS ARE SPLICED AT THAT LOCATION. WHERE TWO GROUPS OF BARS ARE INDICATED TO LAP, PROVIDE CLASS B TENSION LAP SPLICE LENGTH FOR EACH BAR EVEN IF THE NUMBER AND SIZES OF BARS IN ONE GROUP DIFFER FROM THE NUMBER AND SIZES OF BARS IN THE OTHER GROUP.

5. WHERE A 90-DEG HOOK IS GRAPHICALLY INDICATED, PROVIDE ACI STANDARD 90-DEG HOOK. WHERE A 135-DEG HOOK IS GRAPHICALLY INDICATED, PROVIDE ACI STANDARD 135-DEG HOOK. WHERE A 180-DEG HOOK IS GRAPHICALLY INDICATED, PROVIDE ACI STANDARD 180-DEG HOOK.

6. FOR WALLS, EXTEND HOOKED BARS INDICATED BY BAR DIAGRAMS TO DISCONTINUOUS SUPPORT FACE, AND BEYOND LONGITUDINAL BARS OF SUPPORTING MEMBER.

7. AT CORNERS AND INTERSECTIONS OF FOUNDATIONS AND WALLS, PROVIDE BENT BARS OF EQUAL SIZE AND AT SAME SPACING AS TYPICAL REINFORCING AROUND CORNER AND/OR INTO ABUTTING FOUNDATION OR WALL.

8. NO CONSTRUCTION SHALL BE MADE WITHOUT REINFORCEMENT. THE FOLLOWING PERCENTAGE OF THE GROSS CROSS SECTIONAL AREA SHALL BE PROVIDED AS A MINIMUM REINFORCEMENT WHERE NO REINFORCEMENT IS INDICATED:

a.	PILE CAPS	TOP AND BOTTOM, BOTH DIRECTIONS, 0.33%
b.	SUPPORTED STRUCTURAL SLABS	TOP AND BOTTOM, BOTH DIRECTIONS, 0.33%
c.	SLAB ON GRADE	6x6 - W1.4xW1.4 WWF
d.	GRADE BEAMS	TOP AND BOTTOM 0.33%, STIRRUPS #4@12"

BACKFILL AGAINST WALLS:

1. PLACE BACKFILL AGAINST RETAINING WALLS ONLY AFTER SLABS ON GRADE AND ATTACHED FLOOR SLABS ARE COMPLETELY PLACED AND CONCRETE IS VERIFIED TO REACH 75% OF DESIGN STRENGTH. WHERE BACKFILL AGAINST RETAINING WALLS ARE PLACED PRIOR TO COMPLETE CONSTRUCTION OF THE ATTACHED SLAB ON GRADE, CONTRACTOR SHALL DESIGN AND PROVIDE TEMPORARY WALL BRACING.

2. CONTROLLED LOW STRENGTH MATERIAL (CLSM) SHALL BE USED AS BACKFILL FOR THE RETAINING WALLS. THE UNIT WEIGHT SHALL BE 120 PCF OR LESS AND f'c = 100 PSI MINIMUM. THE MATERIAL SHALL MEET REQUIREMENTS AS STATED IN CDOT STANDARD INCLUDING 4.2 AND TEH REFERENCED IDOT REQUIREMENTS AS STATED IN 1019 AND 593. THE MATERIAL SHALL BE EXCAVATIBLE.

DESIGN BY:	WJC									
DRAWN BY:	ESS									
CHECKED BY:	MDS									
APPROVED BY:	WJC	4	7/3/2023	ISSUED FOR BID						
CDOT/APPROVED BY:		NO.	DATE	REVISIONS	DES.	DRW.	CHK.	DCCO	CDOT	

TRANSYSTEMS
222 SOUTH RIVERSIDE PLAZA SUITE 610
CHICAGO, ILLINOIS 60606

SKIDMORE, OWINGS & MERRILL LLP
224 SOUTH MICHIGAN AVENUE, SUITE 1000
CHICAGO, ILLINOIS 60604

CHICAGO DEPARTMENT OF TRANSPORTATION
DIVISION OF ENGINEERING

STATE / LAKE LOOP ELEVATED STATION
200 NORTH STATE STREET, CHICAGO, IL 60601

STRUCTURAL NOTES 2

CDOT PROJECT D-1-209

DATE: 7/3/2023

SPEC. NO.

DRAWING NO. S-002

REVISION NO.

DESIGN LOADING (TRACK AND PLATFORM SUPPORT STRUCTURE)

1. DEAD LOAD
   - a. DESIGN SUPERIMPOSED LOADS ARE IN ADDITION TO SELF WEIGHT OF STRUCTURAL SYSTEM
   - b. TRACKWORK — 460 PLF PER TRACK
   - c. ELEVATED TRACK FOOTWALKS — 25 PSF
   - d. CANOPY STRUCTURE — SEE CANOPY NOTES

2. LIVE LOAD
   - a. TRACK:
     - i. TRAIN LOADS TO ACCOUNT FOR RAPID TRANSIT AXLE LOADS AND CTA RAILBOUND CRANE AXLE LOADS SHALL BE CONSIDERED PER CTA 2017 IDCM
   - b. UNIFORM:
     - i. ELEVATED TRACK FOOTWALKS — 200 PSF
     - ii. PEDESTRIAN AREAS — 100 PSF
     - iii. ROOF — 30 PSF
     - iv. EQUIPMENT, STORAGE, AND MACHINERY ROOMS — 200 PSF
     - v. GRATING (BABY BOARDS) — 200 PSF
     - vi. HEAVY STORAGE (TICKET VENDING MACHINES) — 250 PSF
     - vii. LIGHT STORAGE (TURNSTILES AND GATES) — 125 PSF
     - viii. ELEVATORS, ESCALATORS, AND STAIRS — 100 PSF
     - ix. CANOPY STRUCTURE — SEE CANOPY NOTES
   - c. CONCENTRATED AND LINEAR LOADS:
     - i. CENTER FOOTWALKS (BETWEEN TRACKS) — 3 KIPS + 30 PSF CONST. LOAD
     - ii. PEDESTRIAN AREAS — 3 KIPS + 30 PSF CONST. LOAD
     - iii. GLANCING BLOW TO PLATFORM STRUCTURE — 4000 PLF OVER A LENGTH OF 5 FT
   - d. GUARDRAIL AND HANDRAIL LIVE LOADS:
     - i. PLATFORMS AND MEZZANINES: CONCURRENT HORIZONTAL 75 PLF AND VERTICAL 50 PLF LINEAR LOAD APPLIED AT TOP OR VERTICAL 200 LB CONCENTRATED FORCE AT ANY POINT OR HORIZONTAL 300 LB CONCENTRATED FORCE AT ANY POINT
     - ii. ALL OTHER GUARDRAILS AND HANDRAILS: CONCURRENT HORIZONTAL 50 PLF AND VERTICAL 50 PLF LINEAR LOAD APPLIED AT TOP OR 200 LB CONCENTRATED FORCE AT ANY POINT IN ANY DIRECTION
   - e. IN ACCORDANCE WITH 7.3.3.8.(a) OF THE CTA IDCM, LIVE LOAD REDUCTIONS ARE NOT PERMITTED FOR ANY PEDESTRIAN AREAS AT STATIONS

3. IMPACT LOAD
   - a. CTA TRAIN: 30% MIN OF TRAIN LIVE LOAD HORIZONTAL OR PER AREMA 15.1.3.5
   - b. ELEVATORS: 100% INCREASE FOR ALL ELEVATOR LOADS VERTICAL

4. VEHICLE COLLISION FORCE
   - a. DESIGN COLLISION FORCE (ALONG STATE ST.) — 227 KIPS AT 5 FT ABOVE GROUND
   - b. DESIGN COLLISION FORCE (ALONG LAKE ST.) — 16 KIPS AT 5 FT ABOVE GROUND

5. LONGITUDINAL FORCE
   - a. 200 KIPS ON 1 TRACK PLUS 100 KIPS ON EACH ADDITIONAL, APPLIED SIMULTANEOUSLY AT A POINT 8 FEET ABOVE TOP OF RUNNING RAILS. THE LONGITUDINAL LOAD IS BASED ON A TEN CAR TRAIN AND SHALL BE DISTRIBUTED OVER A MAXIMUM LENGTH OF 1200 FEET OF ELEVATED STRUCTURE.

6. ROCKING EFFECT FORCE
   - a. 10% OF TRAIN LOAD PER TRACK SHALL BE APPLIED DOWNWARDS ON ONE RAIL AND UPWARDS ON THE OTHER ON ALL TRACKS.

7. SNOW LOAD
   - a. CANOPY STRUCTURE: — SEE CANOPY NOTES

8. WIND LOAD
   - a. WIND ON STRUCTURE:
     - i. CANOPY STRUCTURE — SEE CANOPY NOTES
     - ii. PLATFORM
       - 1. VERTICAL SURFACE — 30 PSF
       - 2. HORIZONTAL SURFACE — -40 PSF (UPLIFT)
     - iii. TRACK STRUCTURE
       - 1. WITHOUT TRAIN — 50 PSF
       - 2. WITH TRAIN — 30 PSF
   - b. WIND ON LIVE LOAD:
     - i. WITHIN STATION AREAS — 30 PSF AT 6 FT ABOVE TOP OF RAIL
     - ii. WITHIN NON-STATION AREA — 300 PLF AT 6 FT ABOVE TOP OF RAIL
   - c. LONGITUDINAL LOADING
     - i. LONGITUDINAL WIND LOAD SHALL BE 25% OF THE LATERAL WIND LOADS SPECIFIED ABOVE

9. CONSTRUCTION LOAD
   - a. AT THE TIME OF CONSTRUCTION, LOADS ON ANY AREA OF FLOOR SHALL NOT EXCEED THE LIVE LOAD SPECIFICED ABOVE. IF CONSTRUCTION LOADS EXCEED THE SPECIFIED LOADS, PROPERLY SHORE THE INFLUENCED AREA OF FLOOR.

10. INTERIA LOAD
    - a. CANOPY STRUCTURE: — SEE CANOPY NOTES

11. SEISMIC DATA
    - a. CANOPY STRUCTURE: — SEE CANOPY NOTES

12. FOR LOADING ON CANOPY STRUCTURE, SEE SHEET S-601.

CTA AXLE LOADING AND SPACING (IDCM FIGURES 7-1 & 7-2)

1. NORMAL SERVICE AXLE LOADS
   - a. STRESS AND NORMAL RATING ANALYSIS — P = 26.5 KIPS
   - b. FATIGUE AND DEFLECTION ANALYSIS — P = CAR + PASSENGER
P = 15.6 KIPS + 5.8 KIPS
P = 21.4 KIPS
   - c. TRAINS MAY CONSIST OF ONE TO TEN CARS. ADD IMPACT TO ABOVE LOADS IN ACCORDANCE WITH AREMA
   - d. FATIGUE ANALYSIS ASSUMES STRUCTURAL MEMBERS TO BE SUBJECTED TO 2,000,000 FATIGUE STRESS CYCLES. ALLOWABLE FATIGUE STRESS RANGE PER STRESS CATEGORY B.

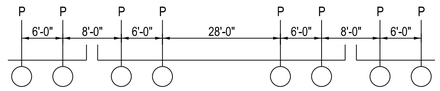

2. CTA RAILBOUND CRANE AXLE LOADS

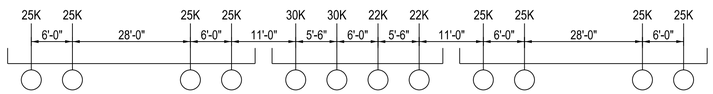

CRANE PLACEMENT AND LOADING

1. ANY HEAVY VEHICLES OR EQUIPMENT WITH AXLE LOADS GREATER THAN AXLE LOADS FOR THE AASHTO DESIGN TRUCK (HS20-44 OR HL-93), THAT WOULD IMPOSE LOADS ON CTA UNDERGROUND STRUCTURES AND/OR STRUCTURES, SHALL REQUIRE STRUCTURAL ANALYSIS TO VERIFY CTA STRUCTURES WILL NOT BE IMPACTED. FOR STATIONED EQUIPMENT WITH OUTRIGGERS, CRANE MAT SHALL BE PROVIDED AT OUTRIGGERS TO ENSURE THE DISTRIBUTED MAXIMUM OUTRIGGER FORCE WILL NOT EXCEED 240 PSF ON THE STREET LEVEL. SUBMIT SIGNED AND SEALED IL STRUCTURAL ENGINEER DRAWINGS AND CALCULATIONS TO THE COMMISSIONER FOR REVIEW.

2. IF CONSTRUCTION EQUIPMENT IS PLACED ABOVE A VAULTED SIDEWALK, THE CONTRACTOR SHALL TEMPORARILY SHORE THE VAULT TO ENSURE THAT THE EXISTING VAULT LID IS NOT COMPROMISED DURING CONSTRUCTION.

ABBREVIATIONS

&	AND
@	AT
°, DEG	DEGREE
#, NO	NUMBER
Ø, DIA	DIAMETER
AASHTO	AMERICAN ASSOCIATION OF STATE HIGHWAY AND TRANSPORTATION OFFICIALS
ACI	AMERICAN CONCRETE INSTITUTE
ADA	AMERICAN WITH DISABILITIES ACT
AESS	ARCHITECTURALLY EXPOSED STRUCTURAL STEEL
AGG	AGGREGATE
AISC	AMERICAN INSTITUTE OF STEEL CONSTRUCTION
ALT	ALTERNATE
ALUM	ALUMINUM
ANC	ANCHOR, ANCHORAGE
APPROX	APPROXIMATE
ARCH	ARCHITECT / ARCHITECTURAL
AREMA	AMERICAN RAILWAY ENGINEERING AND MAINTENANCE-OF-WAY ASSOCIATION
ASD	ALLOWABLE STRENGTH DESIGN
ASTM	AMERICAN SOCIETY FOR TESTING AND MATERIALS
AVG	AVERAGE
AWS	AMERICAN WELDING SOCIETY
BF	BACK FACE
BLDG	BUILDING
BLK	BLOCK
BM	BEAM
BOR	BORING
BOT	BOTTOM
BR	BRACE, BRACED FRAME
BRG	BEARING
BTWN	BETWEEN
BUB	BUILT UP BOX
CBC	CHICAGO BUILDING CODE
CC	CENTER TO CENTER
CCD	CITY OF CHICAGO DATUM
CDOT	CHICAGO DEPARTMENT OF TRANSPORTATION
CIP	CAST IN PLACE
CF	CROSS FRAME
CF, CU FT	CUBIC FOOT
CJ	CONTROL JOINT
CL	CENTERLINE
CLR	CLEARANCE / CLEAR-COVER
CMU	CONCRETE MASONRY UNIT
COL	COLUMN
CONC	CONCRETE
CONN	CONNECTION
CONST	CONSTRUCTION
CONT	CONTINUOUS
CP	CONTROL POINT
CTA	CHICAGO TRANSIT AUTHORITY
CTR	CENTER
CY, CU YD	CUBIC YARD
DBL	DOUBLE
DEPT	DEPARTMENT
DEMO	DEMOLITION, DEMOLISH
DET	DETAIL
DIAG	DIAGONAL
DIAPH	DIAPHRAGM
DIM	DIMENSION
DL	DEAD LOAD
DN	DOWN
DWG	DRAWING
DWL	DOWEL
(E)	EPOXY-COATED
E	EXPANSION
EA	EACH
EF	EACH FACE
EL, ELEV	ELEVATION
ES	EACH SIDE
EQ	EQUAL
EQUIP	EQUIPMENT
EST	ESTIMATED
EX	EXISTING
EXIST	EXISTING
EXP	EXPANSION
EXT	EXTERIOR
F	FIXED
FCM	FRACTURE CRITICAL MEMBER
FDN	FOUNDATION
FF	FRONT FACE
FIN	FINISH
FLEX	FLEXIBLE
FL	FLOOR
FLG	FLANGE
FRM	FRAME
FS	FULL SIZE, FAR SIDE
FT (')	FEET, FOOT
FTG	FOOTING
FURN	FURNISH
GA	GAGE, GAUGE
GALV	GALVANIZED
GEN	GENERAL
GIR	GIRDER
GL	GRID LINE
GRND	GROUND
GYP	GYPSUM
HMA	HOT-MIX ASPHALT
HORIZ	HORIZONTAL
HS	HIGH STRENGTH
HSS	HOLLOW STEEL SHAPE
HT (H)	HEIGHT
ID	INSIDE DIAMETER
IDOT	ILLINOIS DEPARTMENT OF TRANSPORTATION
IN (")	INCH
INCL	INCLUDE
INFO	INFORMATION
INT	INTERIOR
JST	JOIST
JT	JOINT
K	KIP (1,000 LB)
K-FT	KIP FEET
KSF	KIPS PER SQUARE FOOT
KSI	KIPS PER SQUARE INCH
L	LENGTH, ANGLE
LAB	LABORATORY
LB	POUND
LF	LINEAL FOOT
LIN	LINEAL, LINEAR
LL	LIVE LOAD
LLBB	LONG LEG BACK TO BACK
LLH	LONG LEG HORIZONTAL
LLV	LONG LEG VERTICAL
LOC	LOCATION, LOCATE
LONG	LONGITUDINAL
LVL	LEVEL
LT	LEFT
MATL	MATERIAL
MAX	MAXIMUM
MECH	MECHANICAL
MED	MEDIUM
MEP	MECHANICAL, ELECTRICAL, PLUMBING
MIN	MINIMUM
MIRR	MIRRORED
MISC	MISCELLANEOUS
NTR	NOTCH TOUGHNESS REQUIREMENTS
NTS	NOT TO SCALE
NB	NORTHBOUND
NOM	NOMINAL
NS	NEAR SIDE
NWT	NORMAL WEIGHT
OC	ON CENTER
OD	OUTSIDE DIAMETER
OS	OFFSET
OPP	OPPOSITE
OPT	OPTIONAL
PCF	POUNDS PER CUBIC FOOT
PEN	PENETRATION
PJF	PREMOLDED JOINT FILLER
PJP	PARTIAL JOINT PENETRATION
PL	PLATE
PR	PROPOSED
PROP	PROPOSED
PSF	POUNDS PER SQUARE FOOT
PSI	POUNDS PER SQUARE INCH
PT	POINT, POST-TENSION
QTY	QUANTITY
R	RADIUS
REF	REFERENCE
REINF	REINFORCEMENT
REQD	REQUIRED
RET	RETAINING
REV	REVISE, REVISION
ROW	RIGHT-OF-WAY
RT	RIGHT
SB	SOUTHBOUND
SC	SLIP CRITICAL
SECT	SECTION
SF, SQ FT	SQUARE FOOT
SHT	SHEET
SIM	SIMILAR
SLBB	SHORT LEG BACK TO BACK
SPA	SPACES
SPEC	SPECIFICATION
SS	STAINLESS STEEL
STA	STATION
STD	STANDARD
STIFF	STIFFENER
STL	STEEL
STRUCT	STRUCTURAL, STRUCTURE
SY, SQ YD	SQUARE YARD
SYM	SYMMETRICAL
T	TOP, THICKNESS
T&B	TOP AND BOTTOM
TEMP	TEMPERATURE, TEMPORARY
THK	THICK, THICKNESS
THRU	THROUGH
TOS	TOP OF STEEL
TPG	THROUGH PLATE GIRDER
TRANS	TRANSVERSE
TYP	TYPICAL
UNO	UNLESS NOTED OTHERWISE
UT	ULTRASONIC TEST
VIF	VERIFY IN FIELD
VERT	VERTICAL
W/	WITH
W	WIDTH, WIDE
W/O	WITHOUT
WP	WORKING POINT
WT	WEIGHT
WWF	WELDED WIRE FABRIC
Y	YARD

DESIGN BY:	WJC									
DRAWN BY:	ESS									
CHECKED BY:	MDS									
APPROVED BY:	WJC	4	7/3/2023	ISSUED FOR BID						
CDOT/APPROVED BY:		NO.	DATE	REVISIONS	DES.	DRW.	CHK.	DCCO	CDOT	

TRANSYSTEMS
222 SOUTH RIVERSIDE PLAZA SUITE 610
CHICAGO, ILLINOIS 60606

SKIDMORE, OWINGS & MERRILL LLP
224 SOUTH MICHIGAN AVENUE, SUITE 1000
CHICAGO, ILLINOIS 60604

CHICAGO DEPARTMENT OF TRANSPORTATION
DIVISION OF ENGINEERING

STATE / LAKE LOOP ELEVATED STATION
200 NORTH STATE STREET, CHICAGO, IL 60601

STRUCTURAL NOTES 3

CDOT PROJECT D-1-209 | DATE: 7/3/2023

SPEC. NO.

DRAWING NO. S-003

REVISION NO.

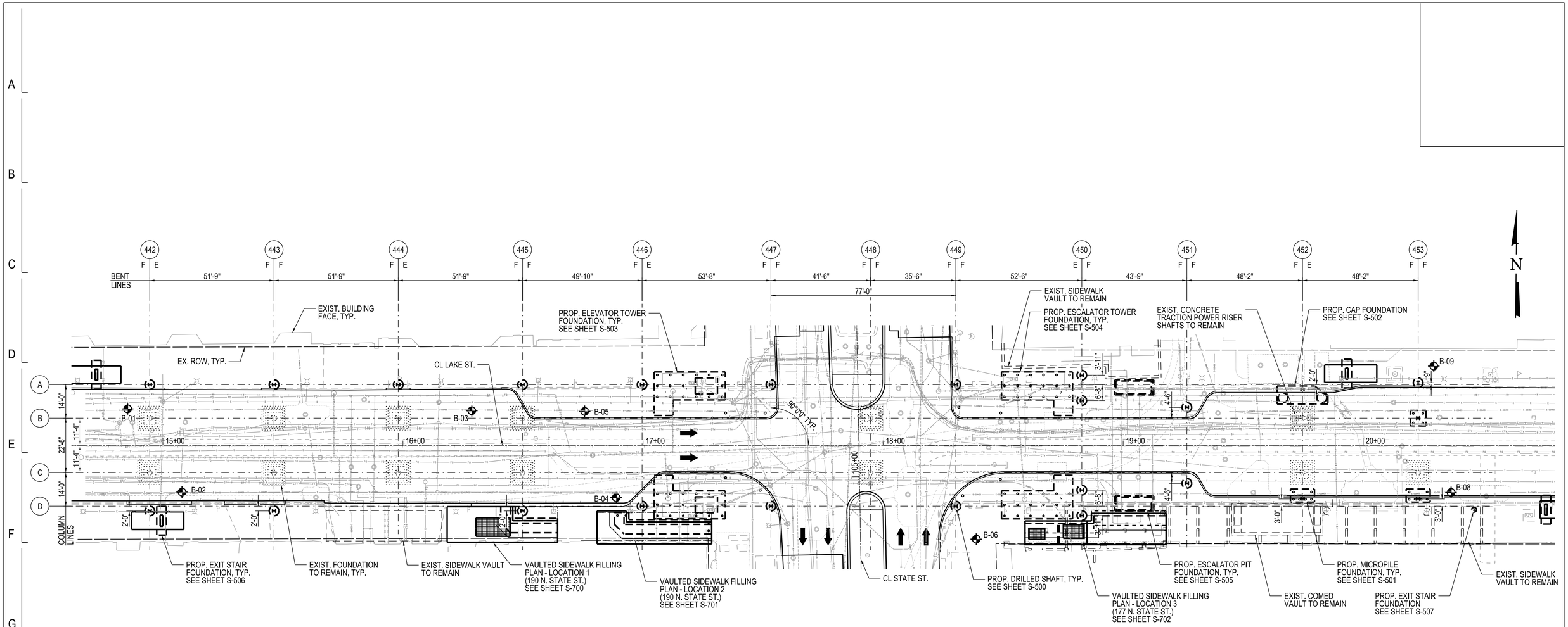

1 OVERALL FOUNDATION LAYOUT PLAN
1" = 20'-0"

LEGEND

- EXIST. ELECTIC
- EXIST. ELECTRIC COMED
- EXIST. ELECTRIC COMED (CUSTOMER OWNED)
- EXIST. TELEPHONE
- EXIST. COMCAST
- EXIST. FIBER OPTIC
- EXIST. COMBINED SEWER
- EXIST. GAS
- EXIST. THERMAL
- EXIST. WATER
- PROP. WATER
- PROP. STORM SEWER
- SOIL BORING
- PROP. DRAINAGE STRUCTURE
- PROP. MANHOLE

NOTES:

1. FOR REMOVAL OF EXISTING FOUNDATIONS, SEE SHEET SD-101.

DESIGN BY:	WJC								
DRAWN BY:	WJC								
CHECKED BY:	MDS								
APPROVED BY:	MDS	4	7/3/2023	ISSUED FOR BID					
CDOT/APPROVED BY:		NO.	DATE	REVISIONS	DES.	DRW.	CHK.	DCCO	CDOT

TRANSYSTEMS
222 SOUTH RIVERSIDE PLAZA SUITE 610
CHICAGO, ILLINOIS 60606

SKIDMORE, OWINGS & MERRILL LLP
224 SOUTH MICHIGAN AVENUE, SUITE 1000
CHICAGO, ILLINOIS 60604

CHICAGO DEPARTMENT OF TRANSPORTATION
DIVISION OF ENGINEERING

STATE / LAKE LOOP ELEVATED STATION
200 NORTH STATE STREET, CHICAGO, IL 60601

OVERALL PLAN - GROUND LEVEL

CDOT PROJECT D-1-209 | DATE: 7/3/2023

SPEC. NO.

DRAWING NO. S-101

REVISION NO.

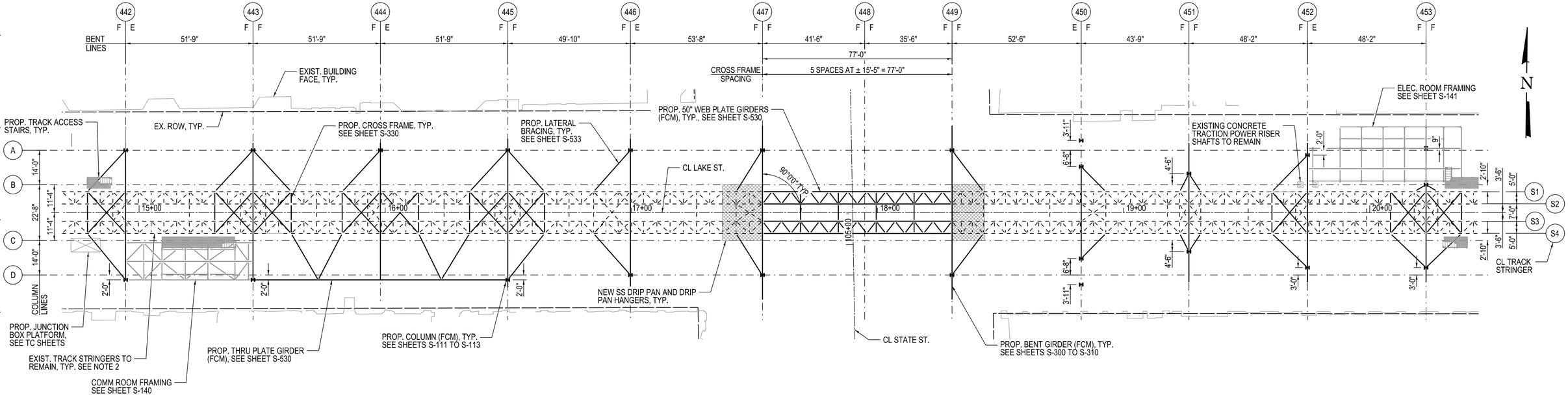

1 OVERALL TRACK STRUCTURE FRAMING PLAN

1" = 20'-0"

NOTES:

1. FOR REMOVAL OF EXISTING TRACK STRUCTURE, SEE SHEET SD-102.
2. FOR EXISTING TRACK STRUCTURE REPAIR DETAILS, SEE SR SHEETS.
3. TRACK LEVEL UTILITIES ARE NOT SHOWN FOR CLARITY. SEE TRACTION POWER PLANS AND SIGNAL PLANS FOR MORE INFORMATION.
4. NEW STRUCTURAL STEEL PLATE GIRDERS WILL SUPPORT THE TRACKS BETWEEN BENTS 447 AND 449. ALL OTHER SPANS WILL REUSE THE EXISTING TRACK SUPERSTRUCTURE.

DESIGN BY:	WJC									
DRAWN BY:	WJC									
CHECKED BY:	MDS									
APPROVED BY:	MDS	4	7/3/2023	ISSUED FOR BID						
CDOT/APPROVED BY:		NO.	DATE	REVISIONS	DES.	DRW.	CHK.	DCCO	CDOT	

TRANSYSTEMS
222 SOUTH RIVERSIDE PLAZA SUITE 610
CHICAGO, ILLINOIS 60606

SKIDMORE, OWINGS & MERRILL LLP
224 SOUTH MICHIGAN AVENUE, SUITE 1000
CHICAGO, ILLINOIS 60604

CHICAGO DEPARTMENT OF TRANSPORTATION
DIVISION OF ENGINEERING

STATE / LAKE LOOP ELEVATED STATION
200 NORTH STATE STREET, CHICAGO, IL 60601

SPEC. NO.

OVERALL PLAN - TRACK LEVEL

DRAWING NO. S-102

CDOT PROJECT D-1-209 | DATE: 7/3/2023 | REVISION NO.

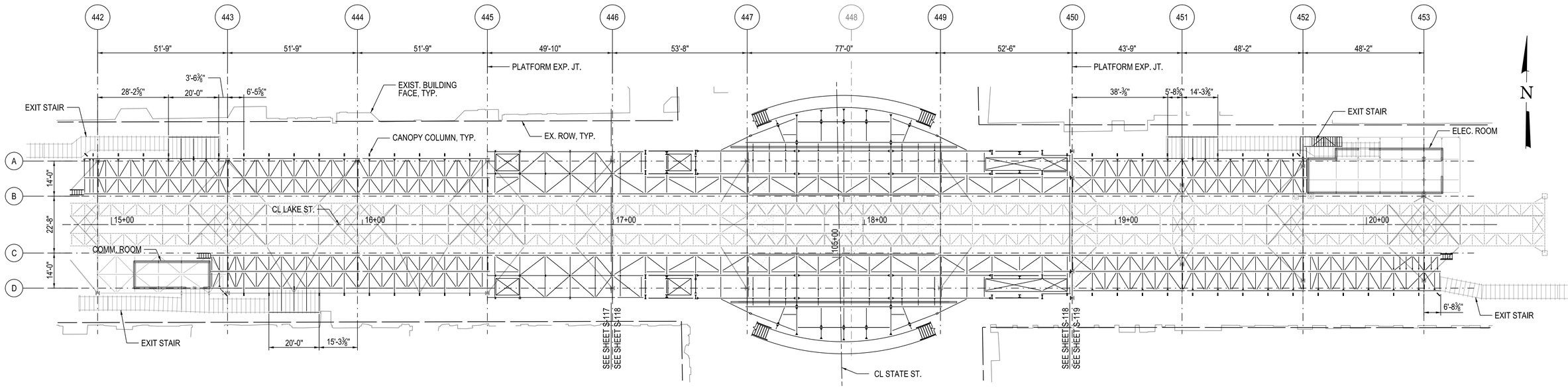

1 OVERALL PLATFORM FRAMING PLAN

1" = 20'-0"

NOTES:

1. EXISTING PLATFORM STRUCTURE TO BE REMOVED AND REPLACED

DESIGN BY:	EG								
DRAWN BY:	EG								
CHECKED BY:	BGK								
APPROVED BY:		4	7/3/2023	ISSUED FOR BID					
CDOT/APPROVED BY:		NO.	DATE	REVISIONS	DES.	DRW.	CHK.	DCCO	CDOT

TRANSYSTEMS
222 SOUTH RIVERSIDE PLAZA SUITE 610
CHICAGO, ILLINOIS 60606

SKIDMORE, OWINGS & MERRILL LLP
224 SOUTH MICHIGAN AVENUE, SUITE 1000
CHICAGO, ILLINOIS 60604

GARZA KARHOFF ENGINEERING, LLC
120 NORTH LASALLE STREET, SUITE 1400
CHICAGO, ILLINOIS 60602

CHICAGO DEPARTMENT OF TRANSPORTATION
DIVISION OF ENGINEERING

STATE / LAKE LOOP ELEVATED STATION
200 NORTH STATE STREET, CHICAGO, IL 60601

SPEC. NO.

OVERALL PLAN - PLATFORM LEVEL

DRAWING NO. S-103

CDOT PROJECT D-1-209 | DATE: 7/3/2023 | REVISION NO.

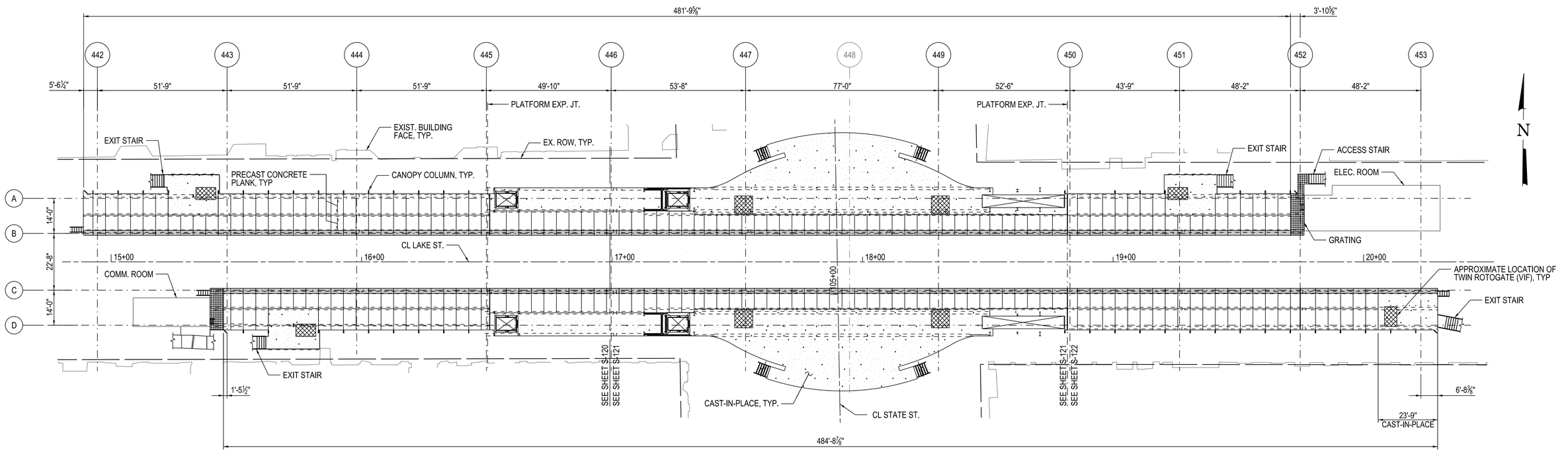

1 OVERALL PLATFORM PRECAST & CAST-IN-PLACE PLAN

1" = 20'-0"

DESIGN BY:	EG								
DRAWN BY:	EG								
CHECKED BY:	BGK								
APPROVED BY:		4	7/3/2023	ISSUED FOR BID					
CDOT/APPROVED BY:		NO.	DATE	REVISIONS	DES.	DRW.	CHK.	DCCO	CDOT

TRANSYSTEMS
222 SOUTH RIVERSIDE PLAZA SUITE 610
CHICAGO, ILLINOIS 60606

SKIDMORE, OWINGS & MERRILL LLP
224 SOUTH MICHIGAN AVENUE, SUITE 1000
CHICAGO, ILLINOIS 60604

GARZA KARHOFF ENGINEERING, LLC
120 NORTH LASALLE STREET, SUITE 1400
CHICAGO, ILLINOIS 60602

CHICAGO DEPARTMENT OF TRANSPORTATION
DIVISION OF ENGINEERING

STATE / LAKE LOOP ELEVATED STATION
200 NORTH STATE STREET, CHICAGO, IL 60601

SPEC. NO.

OVERALL PLAN - PLATFORM PRECAST & CAST-IN-PLACE

DRAWING NO. S-104

CDOT PROJECT D-1-209

DATE: 7/3/2023

REVISION NO.

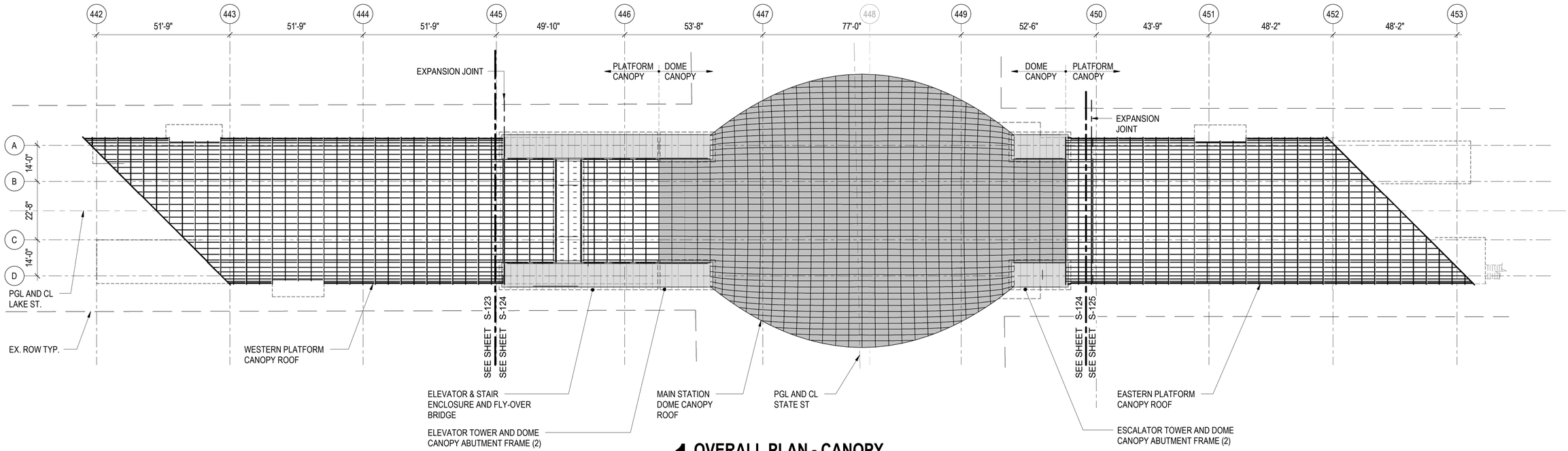

1 OVERALL PLAN - CANOPY

1" = 20'-0"

NOTES:

1. FOR SPECIAL CANOPY STRUCTURAL NOTES AND CRITERIA SEE S-600
2. FOR CANOPY STRUCTURE AND ASSOCIATED SPECIAL STRUCTURE DIAGRAMS, SEE 6-601
3. FOR CANOPY LOADING CRITERIA SEE S-602A & S-602B
4. FOR CANOPY COATINGS AND AESS REQUIREMENTS SEE S-603
5. FOR EASTERN & WESTERN PLATFORM CANOPY NOTES AND DETAILS SEE S-610 THROUGH S-617
6. FOR DOME CANOPY NOTES AND DETAILS SEE S-620 THROUGH S-628
7. FOR FLY-OVER BRIDGE DETAILS SEE S-650 THROUGH S-652
8. FOR CENTRAL 'FEATURE' STAIR SEE S-670 THROUGH S-675
9. FOR HISTORIC CANOPY STRUCTURE SEE S-680

DESIGN BY:									
DRAWN BY:									
CHECKED BY:									
APPROVED BY:		4	7/3/2023	ISSUED FOR BID					
		0	9/9/2022	ISSUED FOR PERMIT	MC	MW	BY		
CDOT/APPROVED BY:		NO.	DATE	REVISIONS	DES.	DRW.	CHK.	DCCO	CDOT

TRANSYSTEMS
222 SOUTH RIVERSIDE PLAZA SUITE 610
CHICAGO, ILLINOIS 60606

SKIDMORE, OWINGS & MERRILL LLP
224 SOUTH MICHIGAN AVENUE, SUITE 1000
CHICAGO, ILLINOIS 60604

CHICAGO DEPARTMENT OF TRANSPORTATION
DIVISION OF ENGINEERING

STATE / LAKE LOOP ELEVATED STATION
200 NORTH STATE STREET, CHICAGO, IL 60601

SPEC. NO.

OVERALL PLAN - CANOPY

DRAWING NO. S-105

CDOT PROJECT D-1-209

DATE: 9/9/2022

REVISION NO.4

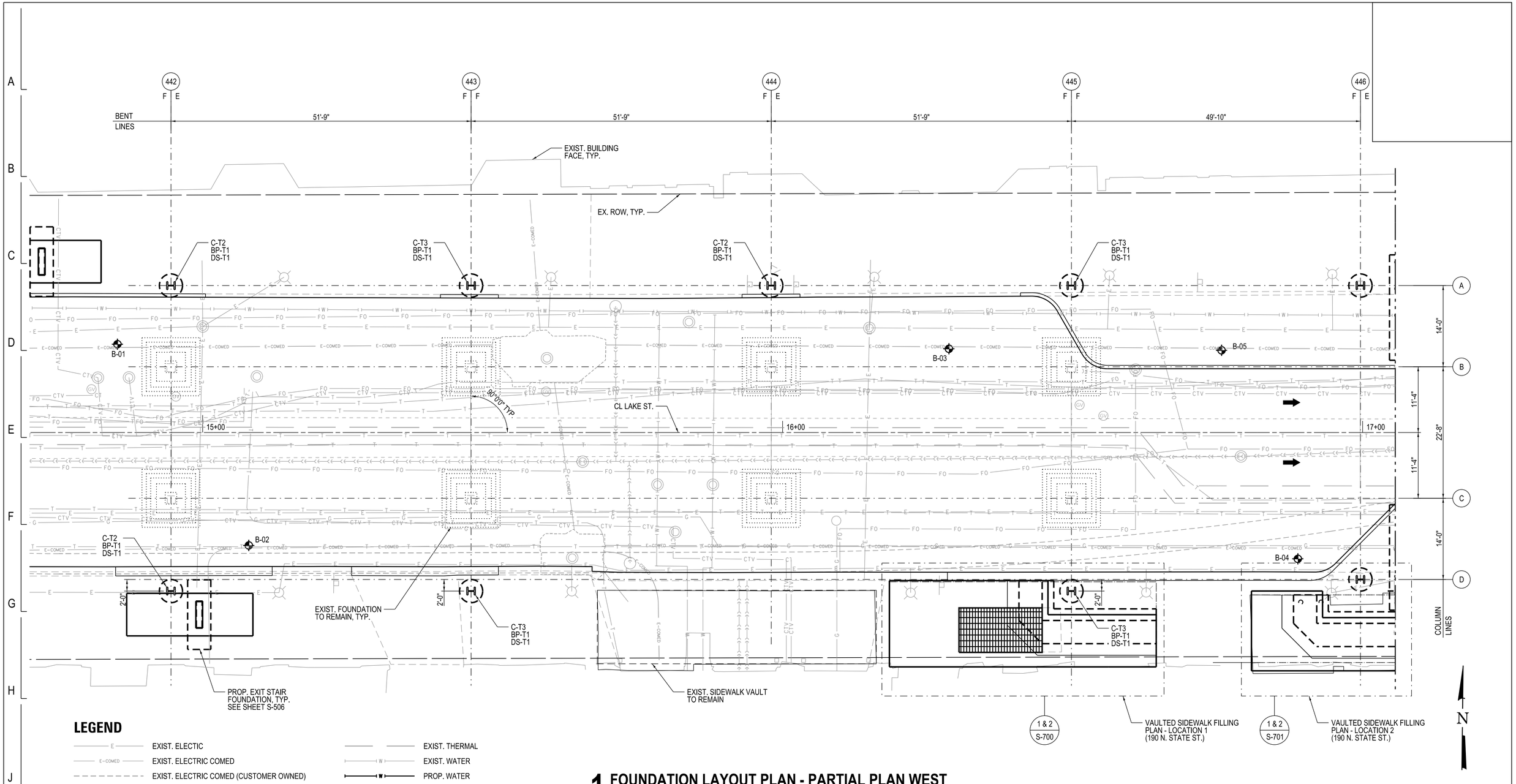

LEGEND

- EXIST. ELECTIC
- EXIST. ELECTRIC COMED
- EXIST. ELECTRIC COMED (CUSTOMER OWNED)
- EXIST. TELEPHONE
- EXIST. COMCAST
- EXIST. FIBER OPTIC
- EXIST. COMBINED SEWER
- EXIST. GAS
- EXIST. THERMAL
- EXIST. WATER
- PROP. WATER
- PROP. STORM SEWER
- SOIL BORING
- PROP. DRAINAGE STRUCTURE
- PROP. MANHOLE

1 FOUNDATION LAYOUT PLAN - PARTIAL PLAN WEST

1/8" = 1'-0"

NOTES:

1. FOR REMOVAL OF EXISTING FOUNDATIONS, SEE SHEET SD-101.
2. "C-T#" INDICATES BUILT-UP COLUMN TYPE, SEE SHEET S-523.
3. "BP-T#" INDICATES BASE PLATE TYPE, SEE SHEET S-520.
4. "DS-T#" INDICATES DRILLED SHAFT TYPE, SEE SHEET S-500.

DESIGN BY:	WJC								
DRAWN BY:	WJC								
CHECKED BY:	MDS								
APPROVED BY:	MDS	4	7/3/2023	ISSUED FOR BID					
CDOT/APPROVED BY:		NO.	DATE	REVISIONS	DES.	DRW.	CHK.	DCCO	CDOT

TRANSYSTEMS
222 SOUTH RIVERSIDE PLAZA SUITE 610
CHICAGO, ILLINOIS 60606

SKIDMORE, OWINGS & MERRILL LLP
224 SOUTH MICHIGAN AVENUE, SUITE 1000
CHICAGO, ILLINOIS 60604

CHICAGO DEPARTMENT OF TRANSPORTATION
DIVISION OF ENGINEERING

STATE / LAKE LOOP ELEVATED STATION
200 NORTH STATE STREET, CHICAGO, IL 60601

SPEC. NO.

PARTIAL PLAN WEST - GROUND LEVEL

DRAWING NO. S-111

CDOT PROJECT D-1-209

DATE: 7/3/2023

REVISION NO.

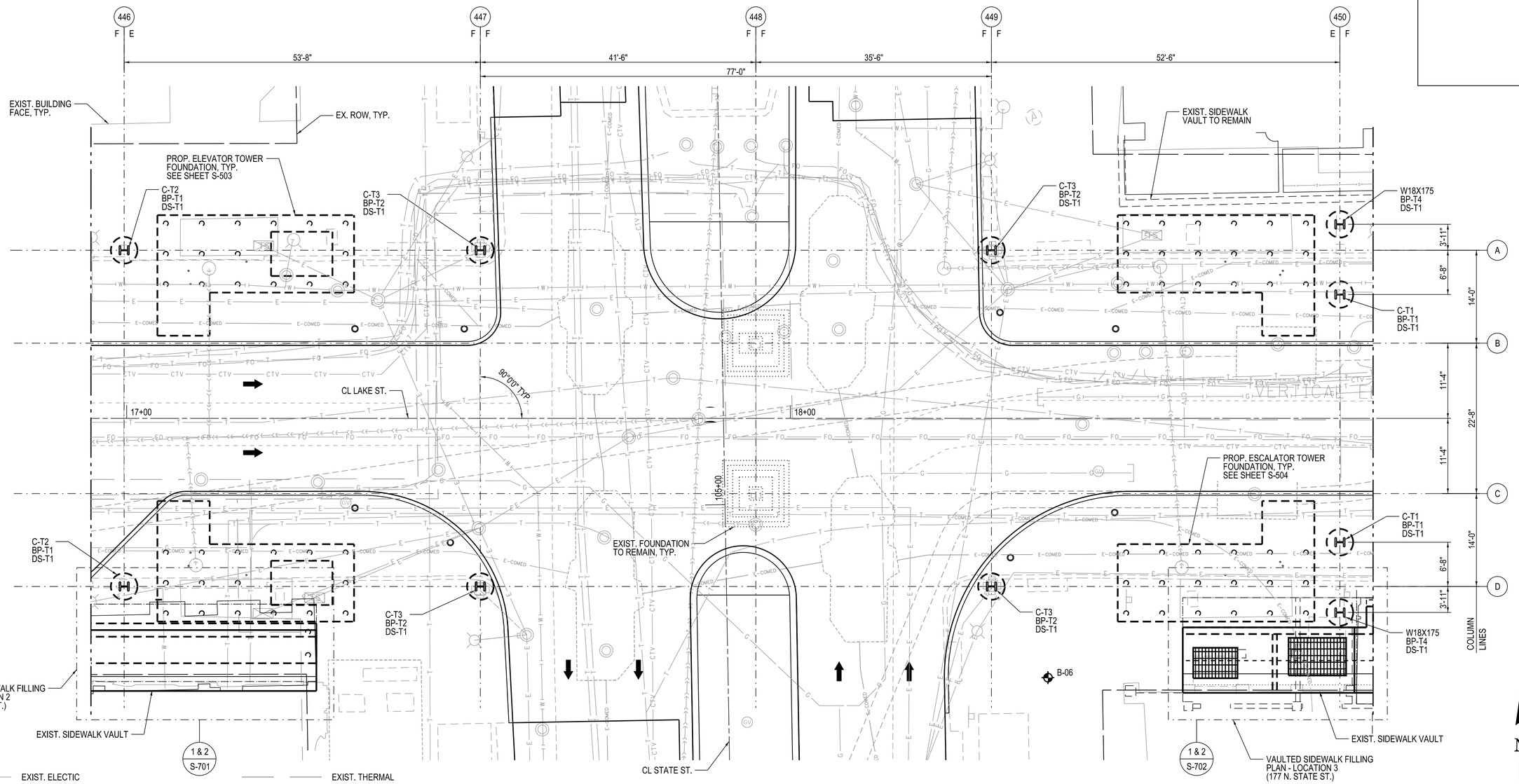

LEGEND

- EXIST. ELECTIC
- EXIST. ELECTRIC COMED
- EXIST. ELECTRIC COMED (CUSTOMER OWNED)
- EXIST. TELEPHONE
- EXIST. COMCAST
- EXIST. FIBER OPTIC
- EXIST. COMBINED SEWER
- EXIST. GAS
- EXIST. THERMAL
- EXIST. WATER
- PROP. WATER
- PROP. STORM SEWER
- SOIL BORING
- PROP. DRAINAGE STRUCTURE
- PROP. MANHOLE

1 FOUNDATION LAYOUT PLAN - PARTIAL PLAN CENTRAL

1/8" = 1'-0"

NOTES:

1. FOR REMOVAL OF EXISTING FOUNDATIONS, SEE SHEET SD-101.
2. "C-T#" INDICATES BUILT-UP COLUMN TYPE, SEE SHEET S-523 .
3. "BP-T#" INDICATES BASE PLATE TYPE, SEE SHEET S-520.
4. "DS-T#" INDICATES DRILLED SHAFT TYPE, SEE SHEET S-500 .
5. FOR ELEVATOR AND ESCALATOR TOWER COLUMN AND BASE PLATE LAYOUT, SEE SHEET S-160.

DESIGN BY:	WJC								
DRAWN BY:	WJC								
CHECKED BY:	MDS								
APPROVED BY:	MDS	4	7/3/2023	ISSUED FOR BID					
CDOT/APPROVED BY:		NO.	DATE	REVISIONS	DES.	DRW.	CHK.	DCCO	CDOT

TRANSYSTEMS
222 SOUTH RIVERSIDE PLAZA SUITE 610
CHICAGO, ILLINOIS 60606

SKIDMORE, OWINGS & MERRILL LLP
224 SOUTH MICHIGAN AVENUE, SUITE 1000
CHICAGO, ILLINOIS 60604

CHICAGO DEPARTMENT OF TRANSPORTATION
DIVISION OF ENGINEERING

STATE / LAKE LOOP ELEVATED STATION
200 NORTH STATE STREET, CHICAGO, IL 60601

SPEC. NO.

PARTIAL PLAN CENTRAL - GROUND LEVEL

DRAWING NO.
S-112

CDOT PROJECT D-1-209

DATE: 7/3/2023

REVISION NO.

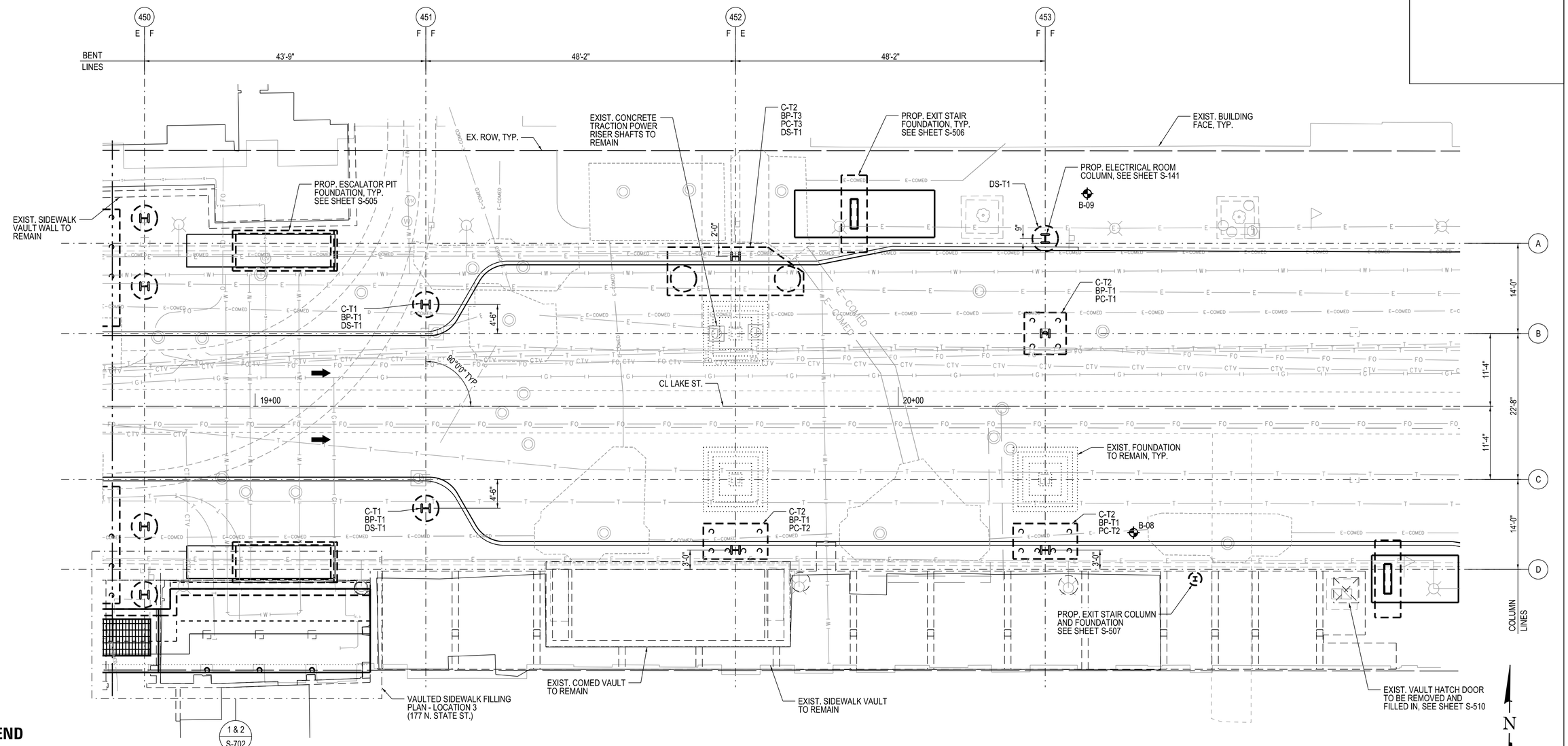

LEGEND

- EXIST. ELECTIC
- EXIST. ELECTRIC COMED
- EXIST. ELECTRIC COMED (CUSTOMER OWNED)
- EXIST. TELEPHONE
- EXIST. COMCAST
- EXIST. FIBER OPTIC
- EXIST. COMBINED SEWER
- EXIST. GAS
- EXIST. THERMAL
- EXIST. WATER
- PROP. WATER
- PROP. STORM SEWER
- SOIL BORING
- PROP. DRAINAGE STRUCTURE
- PROP. MANHOLE

1 FOUNDATION LAYOUT PLAN - PARTIAL PLAN EAST

1/8" = 1'-0"

NOTES:

1. FOR REMOVAL OF EXISTING FOUNDATIONS, SEE SHEET SD-101.
2. "C-T#" INDICATES BUILT-UP COLUMN TYPE, SEE SHEET S-523.
3. "BP-T#" INDICATES BASE PLATE TYPE, SEE SHEET S-520.
4. "DS-T#" INDICATES DRILLED SHAFT TYPE, SEE SHEET S-500.
5. "PC-T#" INDICATES PILE CAP TYPE, SEE SHEETS S-501 AND S-502.

DESIGN BY:	WJC								
DRAWN BY:	WJC								
CHECKED BY:	MDS								
APPROVED BY:	MDS	4	7/3/2023	ISSUED FOR BID					
CDOT/APPROVED BY:		NO.	DATE	REVISIONS	DES.	DRW.	CHK.	DCCO	CDOT

TRANSYSTEMS
222 SOUTH RIVERSIDE PLAZA SUITE 610
CHICAGO, ILLINOIS 60606

SKIDMORE, OWINGS & MERRILL LLP
224 SOUTH MICHIGAN AVENUE, SUITE 1000
CHICAGO, ILLINOIS 60604

CHICAGO DEPARTMENT OF TRANSPORTATION
DIVISION OF ENGINEERING

STATE / LAKE LOOP ELEVATED STATION
200 NORTH STATE STREET, CHICAGO, IL 60601

PARTIAL PLAN EAST - GROUND LEVEL

CDOT PROJECT D-1-209

DATE: 7/3/2023

SPEC. NO.

DRAWING NO. S-113

REVISION NO.

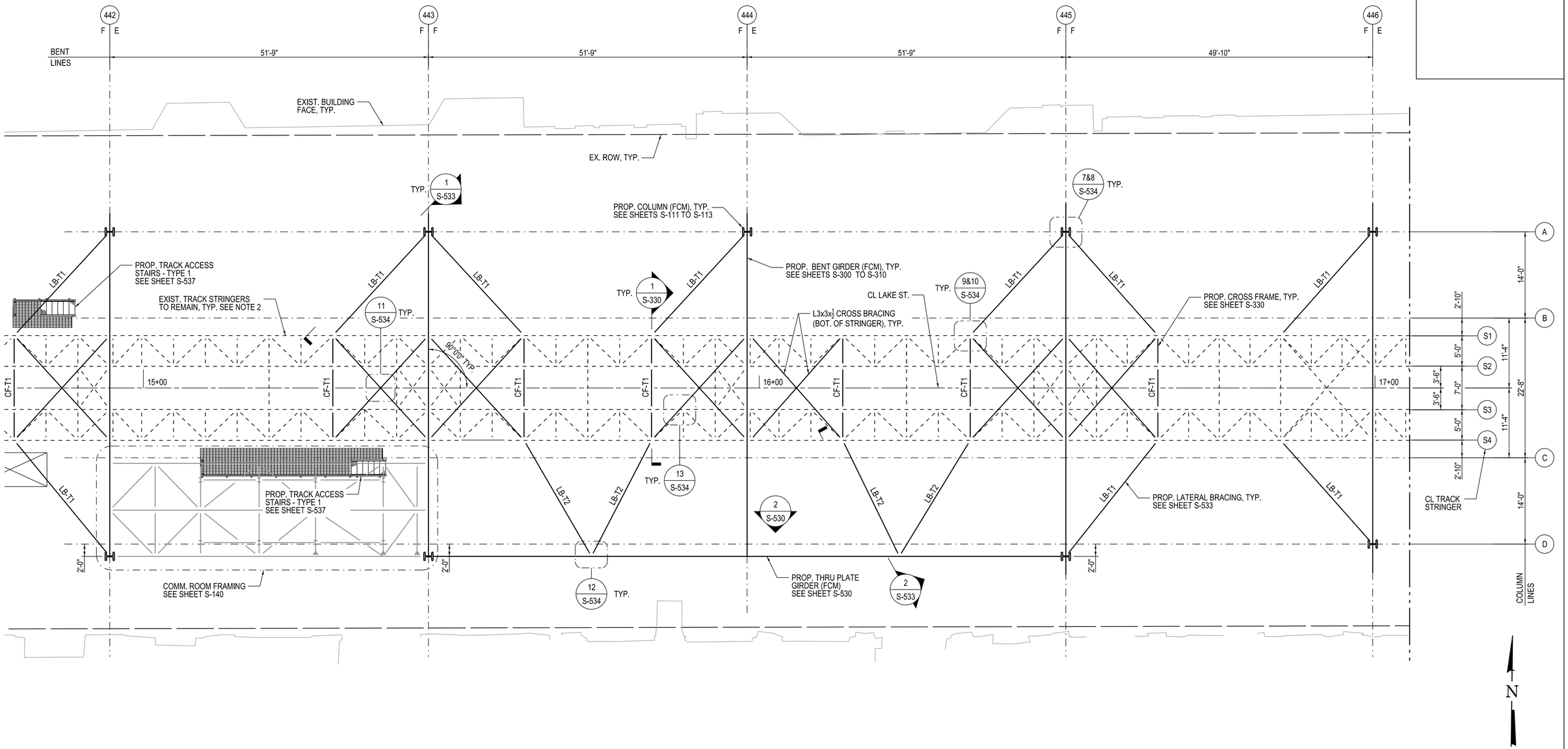

1 TRACK STRUCTURE FRAMING PLAN - PARTIAL PLAN WEST

1/8" = 1'-0"

NOTES:

1. FOR REMOVAL OF EXISTING TRACK STRUCTURE, SEE SHEET SD-102
2. FOR EXISTING TRACK STRUCTURE REPAIR DETAILS, SEE SR SHEETS.
3. TRACK LEVEL UTILITIES ARE NOT SHOWN FOR CLARITY. SEE TRACTION POWER PLANS AND SIGNAL PLANS FOR MORE INFORMATION.
4. "LB-T#" INDICATES LATERAL BRACING TYPE, SEE SHEET S-533.
5. "CF-T#" INDICATES CROSS FRAME TYPE, SEE SHEET S-330.

DESIGN BY:	WJC								
DRAWN BY:	WJC								
CHECKED BY:	MDS								
APPROVED BY:	MDS	4	7/3/2023	ISSUED FOR BID					
CDOT/APPROVED BY:		NO.	DATE	REVISIONS	DES.	DRW.	CHK.	DCCO	CDOT

TRANSYSTEMS
222 SOUTH RIVERSIDE PLAZA SUITE 610
CHICAGO, ILLINOIS 60606

SKIDMORE, OWINGS & MERRILL LLP
224 SOUTH MICHIGAN AVENUE, SUITE 1000
CHICAGO, ILLINOIS 60604

CHICAGO DEPARTMENT OF TRANSPORTATION
DIVISION OF ENGINEERING

STATE / LAKE LOOP ELEVATED STATION
200 NORTH STATE STREET, CHICAGO, IL 60601

PARTIAL PLAN WEST - TRACK LEVEL

CDOT PROJECT D-1-209

DATE: 7/3/2023

SPEC. NO.

DRAWING NO. S-114

REVISION NO.

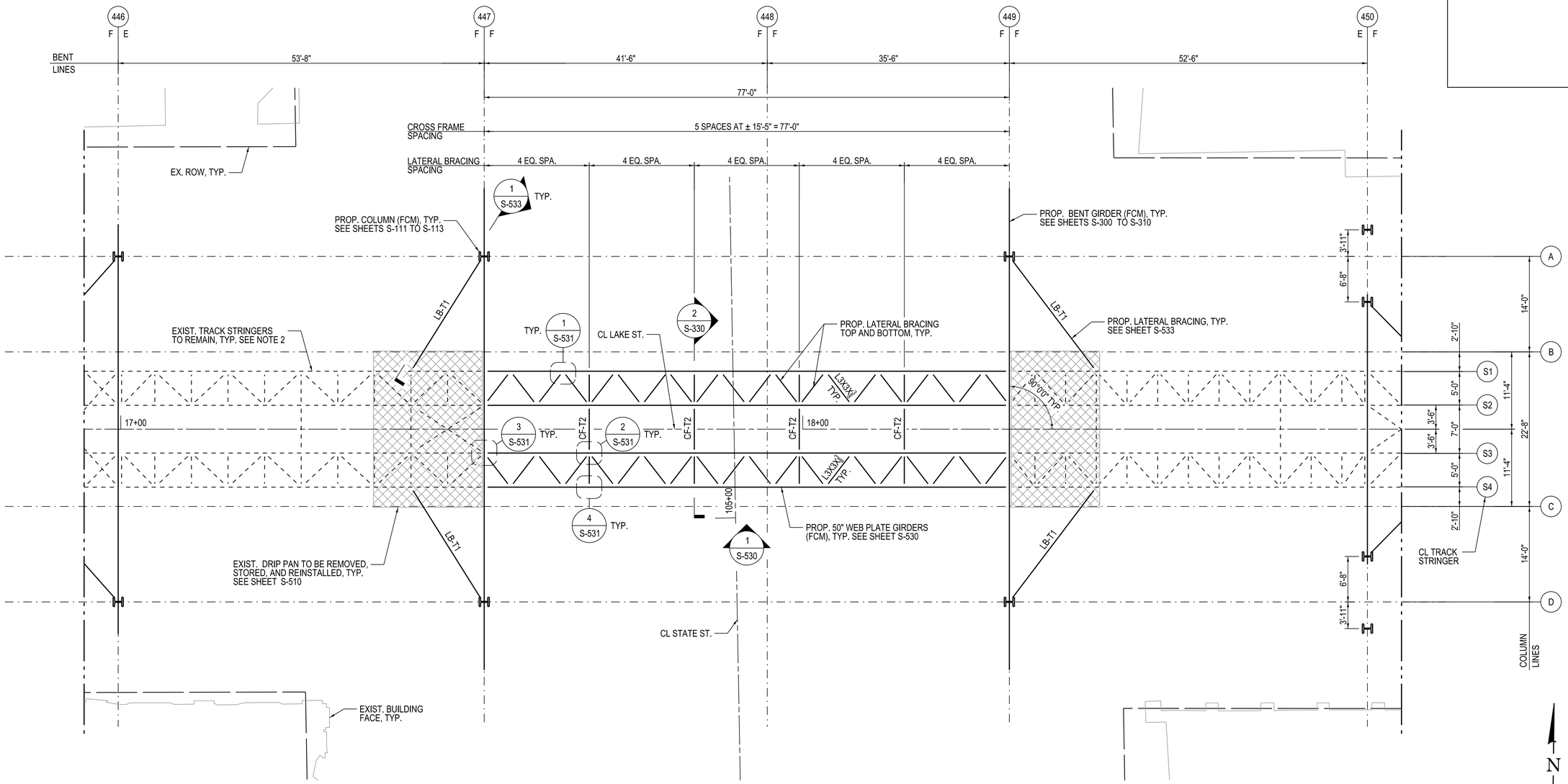

1 TRACK STRUCTURE FRAMING PLAN - PARTIAL PLAN CENTRAL

1/8" = 1'-0"

NOTES:

1. FOR REMOVAL OF EXISTING TRACK STRUCTURE, SEE SHEET SD-102
2. FOR EXISTING TRACK STRUCTURE REPAIR DETAILS, SEE SR SHEETS.
3. TRACK LEVEL UTILITIES ARE NOT SHOWN FOR CLARITY. SEE TRACTION POWER PLANS AND SIGNAL PLANS FOR MORE INFORMATION.
4. "LB-T#" INDICATES LATERAL BRACING TYPE, SEE SHEET S-533.
5. "CF-T#" INDICATES CROSS FRAME TYPE, SEE SHEET S-330.

DESIGN BY:	WJC								
DRAWN BY:	WJC								
CHECKED BY:	MDS								
APPROVED BY:	MDS	4	7/3/2023	ISSUED FOR BID					
CDOT/APPROVED BY:		NO.	DATE	REVISIONS	DES.	DRW.	CHK.	DCCO	CDOT

TRANSYSTEMS
222 SOUTH RIVERSIDE PLAZA SUITE 610
CHICAGO, ILLINOIS 60606

SKIDMORE, OWINGS & MERRILL LLP
224 SOUTH MICHIGAN AVENUE, SUITE 1000
CHICAGO, ILLINOIS 60604

CHICAGO DEPARTMENT OF TRANSPORTATION
DIVISION OF ENGINEERING

STATE / LAKE LOOP ELEVATED STATION
200 NORTH STATE STREET, CHICAGO, IL 60601

PARTIAL PLAN CENTRAL - TRACK LEVEL

CDOT PROJECT D-1-209

DATE: 7/3/2023

SPEC. NO.

DRAWING NO. S-115

REVISION NO.

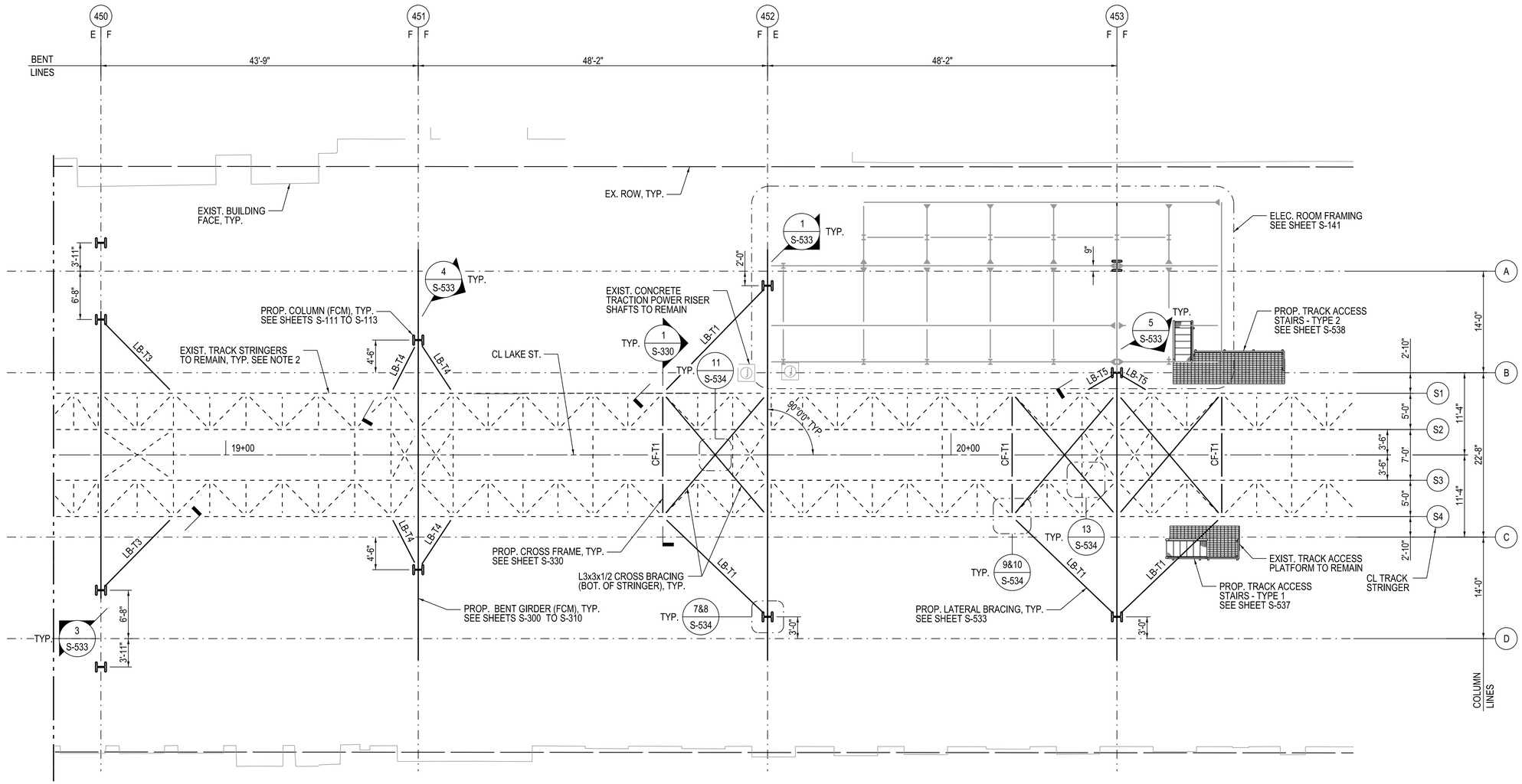

1 TRACK STRUCTURE FRAMING PLAN - PARTIAL PLAN EAST

1/8" = 1'-0"

NOTES:

1. FOR REMOVAL OF EXISTING TRACK STRUCTURE, SEE SHEET SD-102
2. FOR EXISTING TRACK STRUCTURE REPAIR DETAILS, SEE SR SHEETS.
3. TRACK LEVEL UTILITIES ARE NOT SHOWN FOR CLARITY. SEE TRACTION POWER PLANS AND SIGNAL PLANS FOR MORE INFORMATION.
4. "LB-T#" INDICATES LATERAL BRACING TYPE, SEE SHEET S-533.
5. "CF-T#" INDICATES CROSS FRAME TYPE, SEE SHEET S-330.

DESIGN BY:	WJC								
DRAWN BY:	WJC								
CHECKED BY:	MDS								
APPROVED BY:	MDS	4	7/3/2023	ISSUED FOR BID					
CDOT/APPROVED BY:		NO.	DATE	REVISIONS	DES.	DRW.	CHK.	DCCO	CDOT

TranSystems
TRANSYSTEMS
222 SOUTH RIVERSIDE PLAZA SUITE 610
CHICAGO, ILLINOIS 60606

SOM
SKIDMORE, OWINGS & MERRILL LLP
224 SOUTH MICHIGAN AVENUE, SUITE 1000
CHICAGO, ILLINOIS 60604

CDOT
CHICAGO DEPARTMENT OF TRANSPORTATION
DIVISION OF ENGINEERING

STATE / LAKE LOOP ELEVATED STATION
200 NORTH STATE STREET, CHICAGO, IL 60601

PARTIAL PLAN EAST - TRACK LEVEL

CDOT PROJECT D-1-209

DATE: 7/3/2023

SPEC. NO.

DRAWING NO. S-116

REVISION NO.

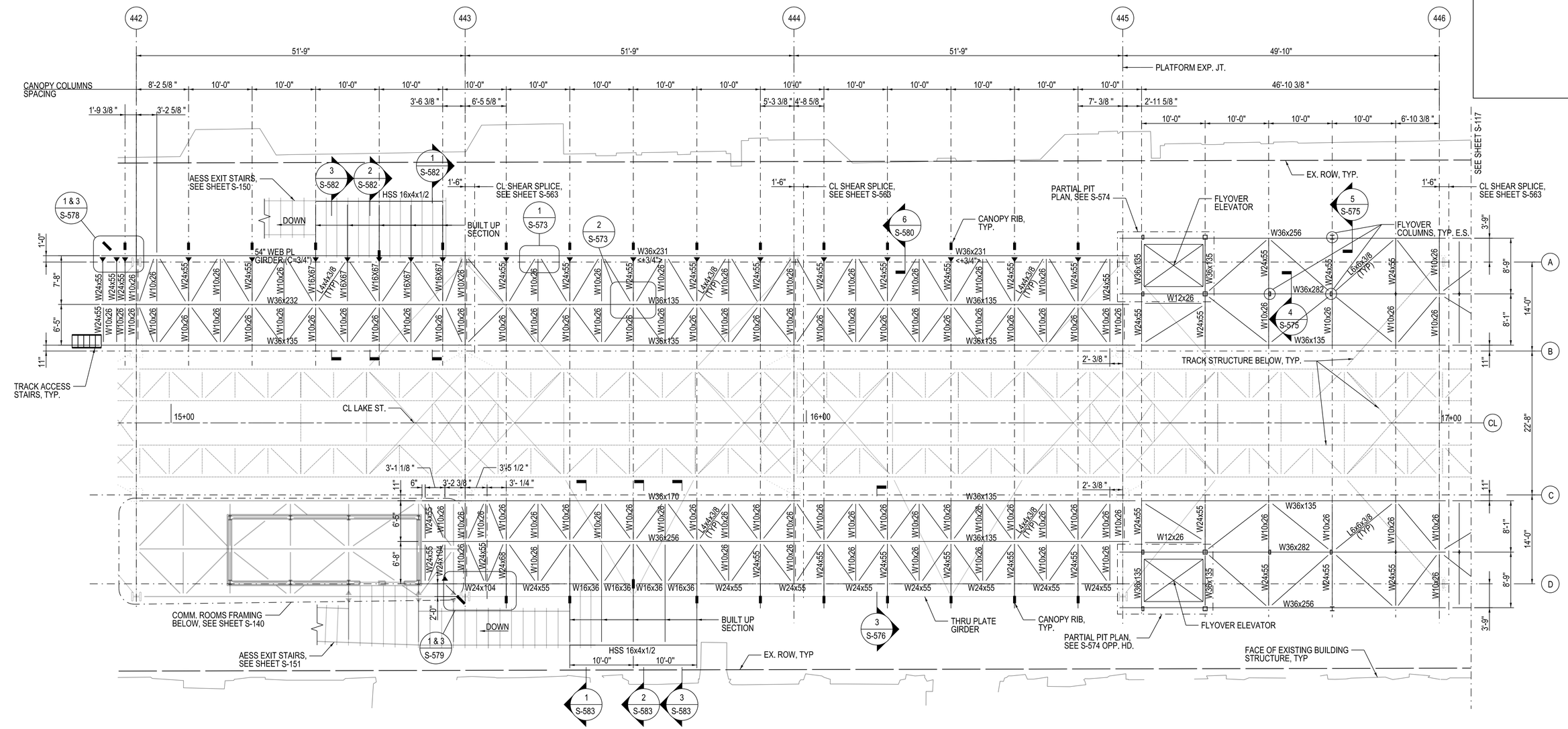

1 PLATFORM FRAMING PLAN - PARTIAL WEST

1/8" = 1'-0"

NOTES:

1. THE TOP OF STEEL ELEVATION IS 3'-8 1/2" FROM THE TOP OF BENT ELEVATION, U.N.O. FOR TOP OF BENT ELEVATION, SEE SHEETS S-300 TO S-310.
2. FOR SECTION CUTS AT EACH BENT, SEE S-562 TO S-572.
3. FOR TYPICAL STEEL FRAMING DETAILS, SEE S-573 TO S-584.
4. (-3") INDICATES TOP OF BEAM ELEVATION IS 3" BELOW TOP OF STEEL.
5. <+3"> INDICATES CAMBER UP AT CENTER OF STEEL BEAM SPAN.

DESIGN BY:	EG								
DRAWN BY:	EG								
CHECKED BY:	BGK								
APPROVED BY:		4	7/3/2023	ISSUED FOR BID					
CDOT/APPROVED BY:		NO.	DATE	REVISIONS	DES.	DRW.	CHK.	DCCO	CDOT

TRANSYSTEMS
222 SOUTH RIVERSIDE PLAZA SUITE 610
CHICAGO, ILLINOIS 60606

SKIDMORE, OWINGS & MERRILL LLP
224 SOUTH MICHIGAN AVENUE, SUITE 1000
CHICAGO, ILLINOIS 60604

GARZA KARHOFF ENGINEERING, LLC
120 NORTH LASALLE STREET, SUITE 1400
CHICAGO, ILLINOIS 60602

CHICAGO DEPARTMENT OF TRANSPORTATION
DIVISION OF ENGINEERING

STATE / LAKE LOOP ELEVATED STATION
200 NORTH STATE STREET, CHICAGO, IL 60601

SPEC. NO.

PARTIAL PLAN WEST - PLATFORM LEVEL

DRAWING NO. S-117

CDOT PROJECT D-1-209

DATE: 7/3/2023

REVISION NO.

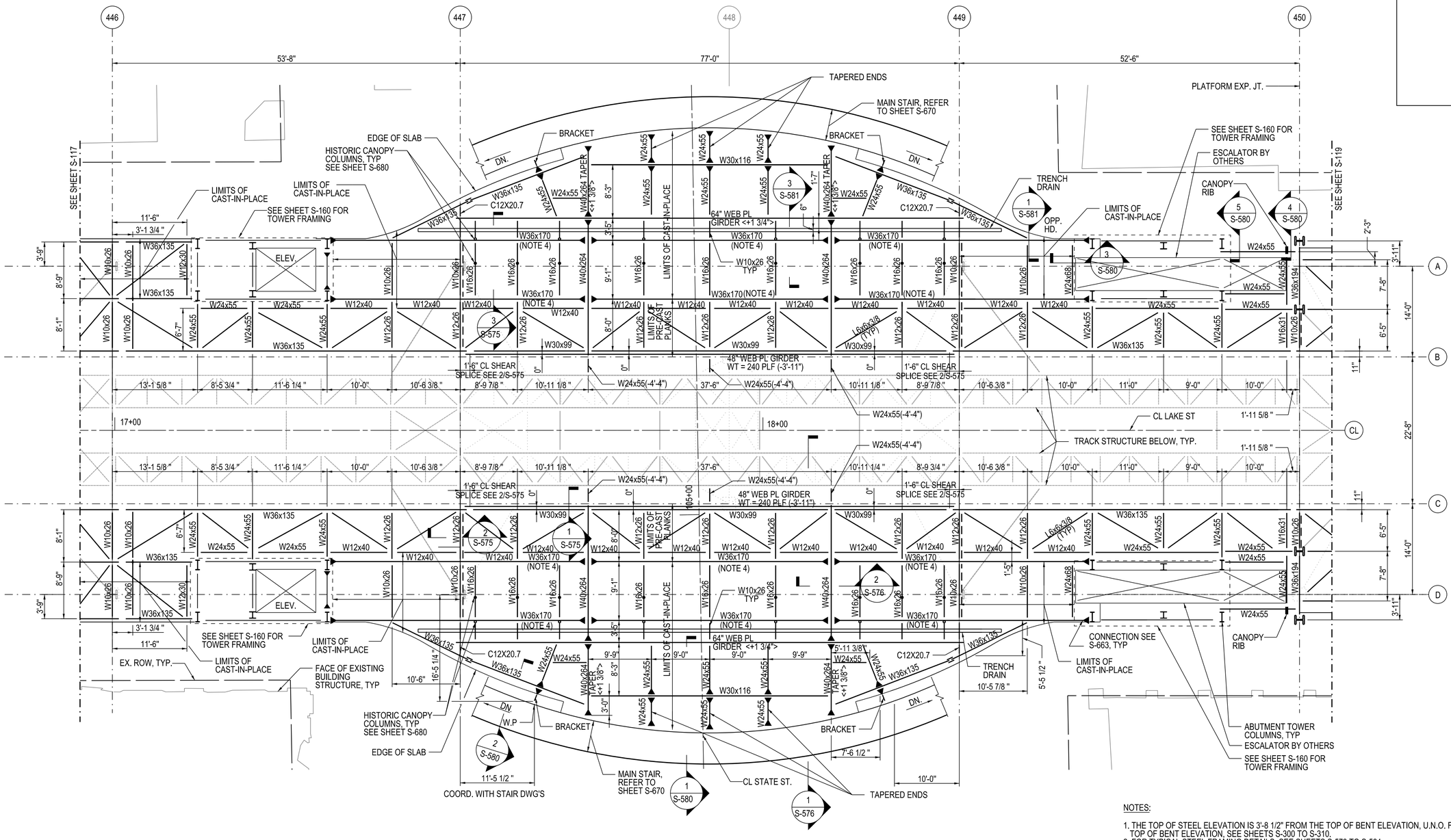

1 PLATFORM FRAMING PLAN - PARTIAL CENTRAL

1/8" = 1'-0"

NOTES:

1. THE TOP OF STEEL ELEVATION IS 3'-8 1/2" FROM THE TOP OF BENT ELEVATION, U.N.O. FOR TOP OF BENT ELEVATION, SEE SHEETS S-300 TO S-310.
2. FOR TYPICAL STEEL FRAMING DETAILS, SEE SHEETS S-573 TO S-584.
3. FOR SECTION CUTS AT EACH BENT, SEE SHEETS S-562 TO S-572.
4. W-BM. MEMBERS ACT AS DOME CANOPY TIES; NO CUTTING OF, WELDING TO, OR ANY OTHER MODIFICATIONS ARE PERMITTED WITHOUT PRIOR APPROVAL BY THE ENGINEERS.DOME CANOPY TIES ARE FRACTURE CRITICAL MEMBERS (FCM) REFER TO S-002.
5. (-3") INDIACTES TOP OF BEAM ELEVATION IS 3" BELOW TOP OF STEEL.
6. < +3"> INDICATES CAMBER UP AT CENTER OF STEEL BEAM SPAN.

N

DESIGN BY:	UT								
DRAWN BY:	UT								
CHECKED BY:	JL								
APPROVED BY:		4	7/3/2023	ISSUED FOR BID					
CDOT/APPROVED BY:		NO.	DATE	REVISIONS	DES.	DRW.	CHK.	DCCO	CDOT

TRANSYSTEMS
222 SOUTH RIVERSIDE PLAZA SUITE 610
CHICAGO, ILLINOIS 60606

SKIDMORE, OWINGS & MERRILL LLP
224 SOUTH MICHIGAN AVENUE, SUITE 1000
CHICAGO, ILLINOIS 60604

GARZA KARHOFF ENGINEERING, LLC
120 NORTH LASALLE STREET, SUITE 1400
CHICAGO, ILLINOIS 60602

CHICAGO DEPARTMENT OF TRANSPORTATION
DIVISION OF ENGINEERING

STATE / LAKE LOOP ELEVATED STATION
200 NORTH STATE STREET, CHICAGO, IL 60601

PARTIAL PLAN CENTRAL - PLATFORM LEVEL

SPEC. NO.

DRAWING NO. S-118

CDOT PROJECT D-1-209 | DATE: 7/3/2023 | REVISION NO.

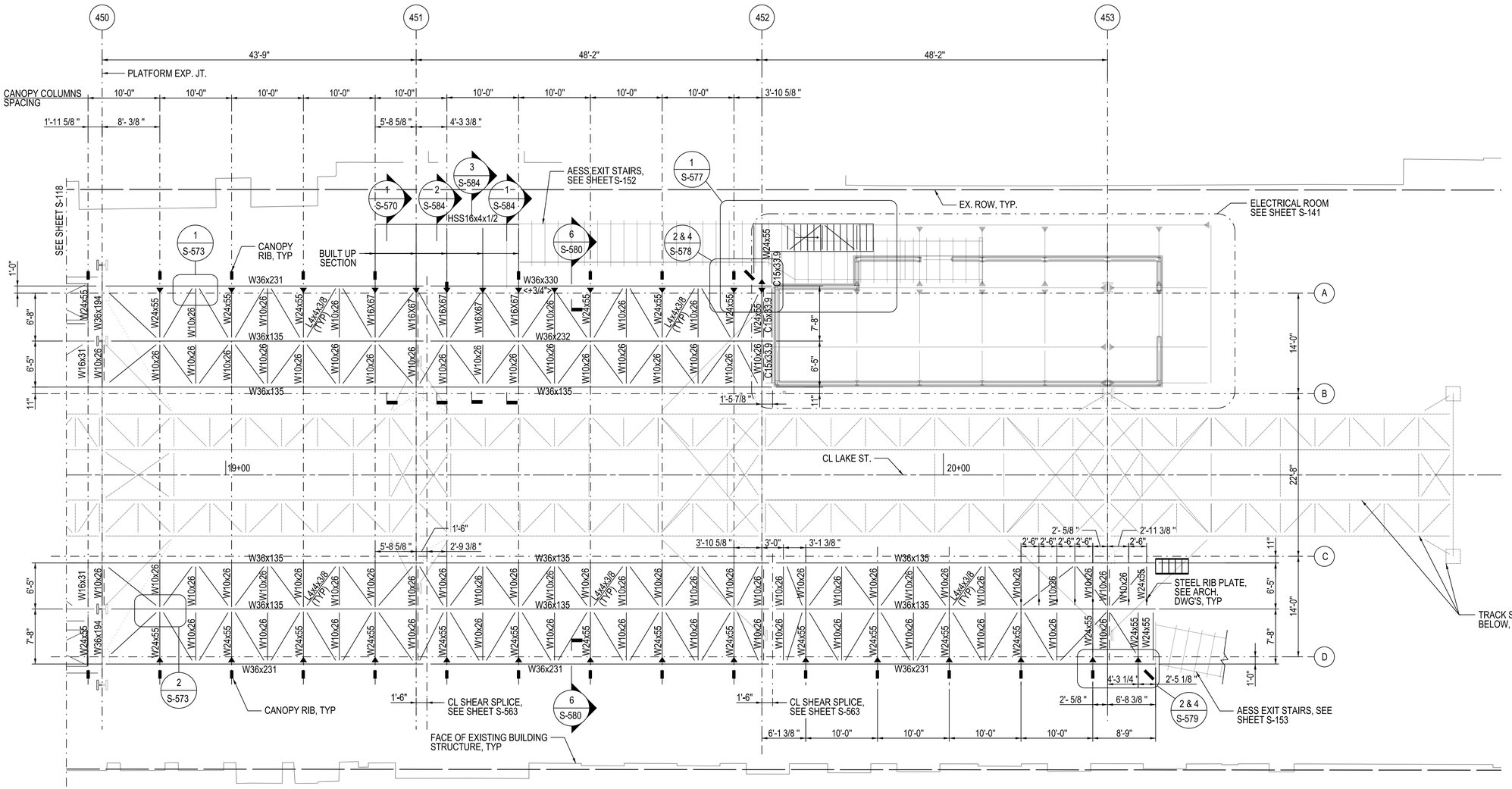

1 PLATFORM FRAMING PLAN - PARTIAL EAST

1/8" = 1'-0"

NOTES:

1. THE TOP OF STEEL ELEVATION IS 3'-8 1/2" FROM THE TOP OF BENT ELEVATION, U.N.O. FOR TOP OF BENT ELEVATION, SEE SHEETS S-300 TO S-310.
2. FOR SECTION CUTS AT EACH BENT, SEE S-562 TO S-572.
3. FOR TYPICAL STEEL FRAMING DETAILS, SEE S-573 TO S-584.
4. (-3") INDICATES TOP OF BEAM ELEVATION IS 3" BELOW TOP OF STEEL.
5. <+3"> INDICATES CAMBER UP AT CENTER OF STEEL BEAM SPAN.

N

DESIGN BY:	EG								
DRAWN BY:	EG								
CHECKED BY:	BGK								
APPROVED BY:		4	7/3/2023	ISSUED FOR BID					
CDOT/APPROVED BY:		NO.	DATE	REVISIONS	DES.	DRW.	CHK.	DCCO	CDOT

TRANSYSTEMS
222 SOUTH RIVERSIDE PLAZA SUITE 610
CHICAGO, ILLINOIS 60606

SKIDMORE, OWINGS & MERRILL LLP
224 SOUTH MICHIGAN AVENUE, SUITE 1000
CHICAGO, ILLINOIS 60604

GARZA KARHOFF ENGINEERING, LLC
120 NORTH LASALLE STREET, SUITE 1400
CHICAGO, ILLINOIS 60602

CHICAGO DEPARTMENT OF TRANSPORTATION
DIVISION OF ENGINEERING

STATE / LAKE LOOP ELEVATED STATION
200 NORTH STATE STREET, CHICAGO, IL 60601

SPEC. NO.

PARTIAL PLAN EAST - PLATFORM LEVEL

DRAWING NO. S-119

CDOT PROJECT D-1-209

DATE: 7/3/2023

REVISION NO.

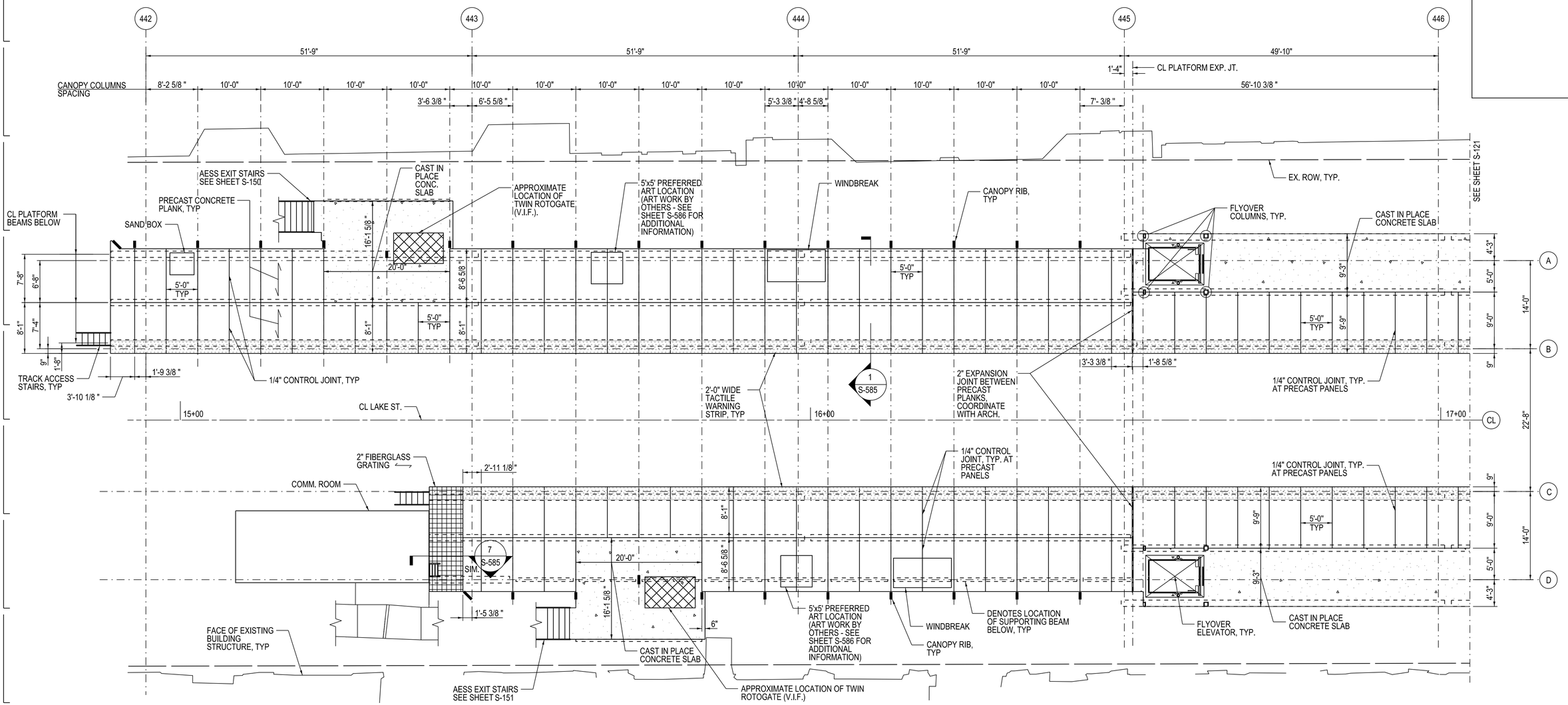

NOTES:

1. FOR PRECAST DETAILS, REFER TO SHEET S-585 .
2. FOR ALL PRECAST NOTCHES, COORDINATE WITH ARCHITECTURE, MEP, AND STRUCTURAL PLANS PRIOR TO FABRICATION.
3. CONTRACTOR SHALL PROVIDE SHIMS ON ALL SUPPORT BEAMS WITH SHIMS RUNNING EAST-WEST UNDER PRECAST.
4. PRECAST LAYOUT IS APPROXIMATE. SUBMIT FINAL LAYOUT FOR APPROVAL BY THE COMMISSIONER.
5. SEE S-586 TO ADJUST SHIM PLATES FOR HORIZONTAL CONNECTIONS.
6. FOR LOCATIONS OF EMBEDDED PLATES IN PRECAST FOR STRUCTURAL ATTACHMENTS, SEE DETAILS AND KEY PLAN, COORDINATE WITH ARCH.
7. OPENINGS THROUGH PRECAST PLANKS LESS THAN 2" DIA. TO BE DESIGNED/COORDINATED BY CONTRACTOR. SUCH OPENINGS SHALL AVOID REINFORCEMENT AND STEEL FRAMING BELOW.
8. FOR CAST IN PLACE CONCRETE, REFER TO SHEET S-587 FOR DETAILS.
9. ALL STEEL BEAMS SUPPORTING CAST IN PLACE FORMED CONCRETE SHALL HAVE A MIN. 3/4" DIA. x 5" LONG STUDS @ 12" O.C. U.N.O.

1 PLATFORM PRECAST PLANK & CAST-IN-PLACE PLAN - PARTIAL WEST

1/8" = 1'-0"

PRECAST DESIGN LOADS

1. SUPER IMPOSED DEAD LOAD:		25 PSF
2. LIVE LOAD:		100 PSF OR 3 KIP + 30 PSF
3. GLANCING BLOW:		4K OVER 5FT LENGTH APPLIED TO HORIZ. EDGE IN N-S DIR. ALONG TRACK
4.LOADS IMPOSED - SEE PLAN FOR APPROXIMATE LOCATION		
A.	ROTOGATE	1,500 LBS POINT LOAD AT THE CENTER OF ROTOGATE, SEE ARCH SPECS
B.	SAND BOX (MOVING)	3.5 KIPS OVER 3'-4"X2'-8" AREA
C.	WINDBREAK	DL= 1 KIPS, W=±1.5 KIPS (PER POST)
D.	ART BY DCASE	FOR REQUIREMENTS AND COORDINATION SEE SHEET S-586

5. COORDINATE MISC. LOADS AND REQUIRED NOTCHES, INSERTS, EMBEDS, AND ACCESSORIES WITH MANUFACTURERS DATA SHEET SUBMITTALS, AND OTHER CONTRACT DOCUMENTS.
6. REFER TO S-586, ARCH. AND CT DWGS FOR LOCATION OF MISC. LOADS.
7. SAND BOX MOVING LOAD APPLIES TO ALL PRECAST PANELS.

DESIGN BY:	EG									
DRAWN BY:	EG									
CHECKED BY:	BGK									
APPROVED BY:		4	7/3/2023	ISSUED FOR BID						
CDOT/APPROVED BY:		NO.	DATE	REVISIONS	DES.	DRW.	CHK.	DCCO	CDOT	

TRANSYSTEMS
222 SOUTH RIVERSIDE PLAZA SUITE 610
CHICAGO, ILLINOIS 60606

SKIDMORE, OWINGS & MERRILL LLP
224 SOUTH MICHIGAN AVENUE, SUITE 1000
CHICAGO, ILLINOIS 60604

GARZA KARHOFF ENGINEERING, LLC
120 NORTH LASALLE STREET, SUITE 1400
CHICAGO, ILLINOIS 60602

CHICAGO DEPARTMENT OF TRANSPORTATION
DIVISION OF ENGINEERING

STATE / LAKE LOOP ELEVATED STATION
200 NORTH STATE STREET, CHICAGO, IL 60601

SPEC. NO.

PARTIAL PLAN WEST - PRECAST & CAST-IN-PLACE LEVEL

DRAWING NO. S-120

CDOT PROJECT D-1-209 | DATE: 7/3/2023 | REVISION NO.

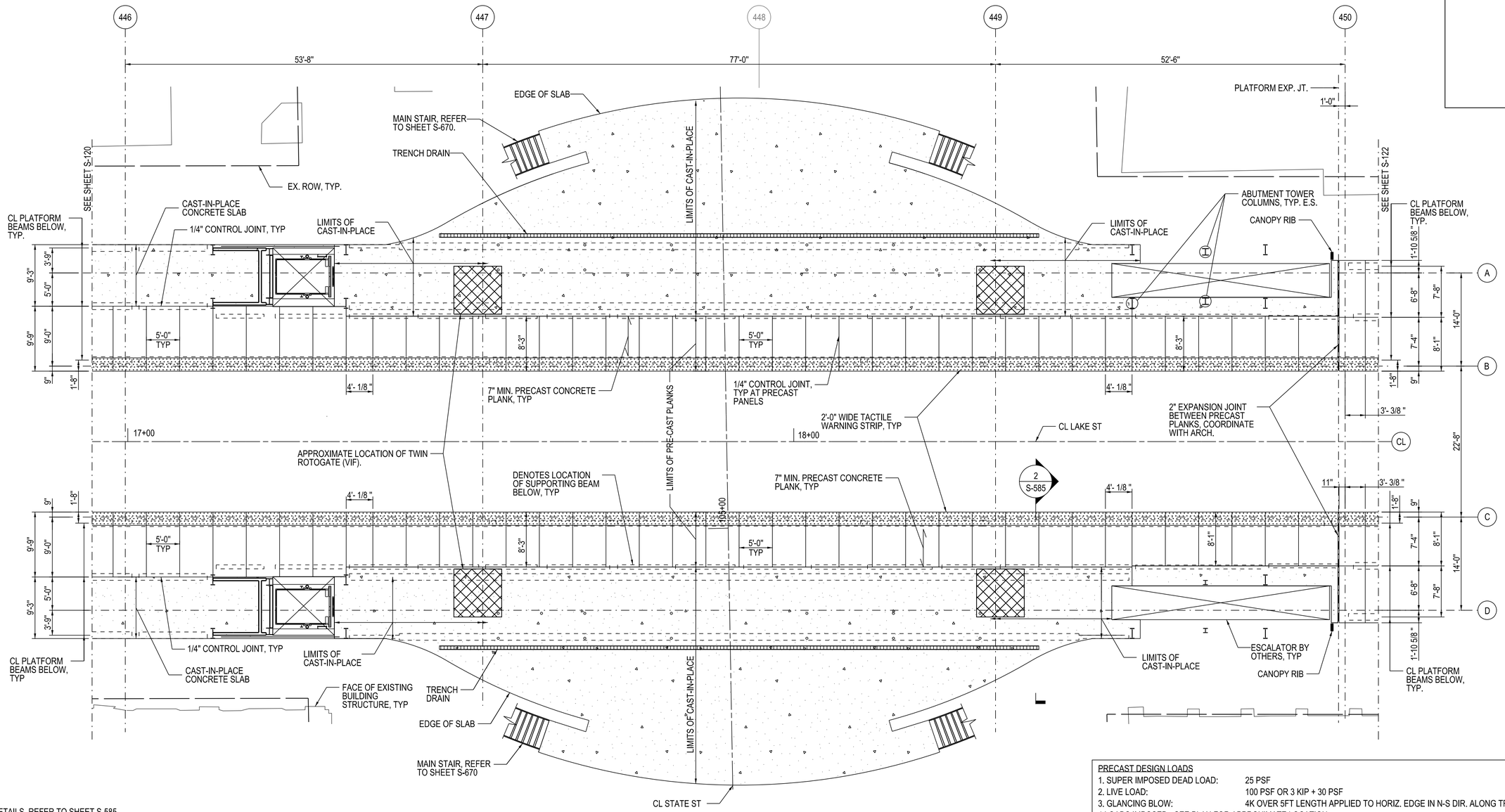

NOTES:

1. FOR PRECAST DETAILS, REFER TO SHEET S-585.
2. FOR ALL PRECAST NOTCHES, COORDINATE WITH ARCHITECTURE, MEP, AND STRUCTURAL PLANS PRIOR TO FABRICATION.
3. CONTRACTOR SHALL PROVIDE SHIMS ON ALL SUPPORT BEAMS WITH SHIMS RUNNING EAST-WEST UNDER PRECAST.
4. PRECAST LAYOUT IS APPROXIMATE. SUBMIT FINAL LAYOUT FOR APPROVAL BY THE COMMISSIONER.
5. SEE S-586 TO ADJUST SHIM PLATES FOR HORIZONTAL CONNECTIONS.
6. FOR LOCATIONS OF EMBEDDED PLATES IN PRECAST FOR STRUCTURAL ATTACHMENTS, SEE DETAILS AND KEY PLAN, COORDINATE WITH ARCH.
7. OPENINGS THROUGH PRECAST PLANKS LESS THAN 2" DIA. TO BE DESIGNED/COORDINATED BY CONTRACTOR. SUCH OPENINGS SHALL AVOID REINFORCEMENT AND STEEL FRAMING BELOW.
8. FOR CAST IN PLACE CONCRETE, REFER TO SHEET S-587 FOR DETAILS.
9. ALL STEEL BEAMS SUPPORTING CAST IN PLACE FORMED CONCRETE SHALL HAVE A MIN. 3/4" DIA. x 5" LONG STUDS @ 12" O.C. U.N.O.

1 PLATFORM PRECAST PLANK & CAST-IN-PLACE PLAN - PARTIAL CENTRAL

1/8" = 1'-0"

PRECAST DESIGN LOADS

1. SUPER IMPOSED DEAD LOAD:		25 PSF
2. LIVE LOAD:		100 PSF OR 3 KIP + 30 PSF
3. GLANCING BLOW:		4K OVER 5FT LENGTH APPLIED TO HORIZ. EDGE IN N-S DIR. ALONG TRACK
4.LOADS IMPOSED - SEE PLAN FOR APPROXIMATE LOCATION		
A.	ROTOGATE	1,500 LBS POINT LOAD AT THE CENTER OF ROTOGATE, SEE ARCH SPECS
B.	SAND BOX (MOVING)	3.5 KIPS OVER 3'-4"X2'-8" AREA
C.	WINDBREAK	DL= 1 KIPS, W=±1.5 KIPS (PER POST)
D.	ART BY DCASE	FOR REQUIREMENTS AND COORDINATION SEE SHEET S-586

5. COORDINATE MISC. LOADS AND REQUIRED NOTCHES, INSERTS, EMBEDS, AND ACCESSORIES WITH MANUFACTURERS DATA SHEET SUBMITTALS, AND OTHER CONTRACT DOCUMENTS.
6. REFER TO ARCH. AND CT DWGS FOR LOCATION OF MISC. LOADS.
7. SAND BOX MOVING LOAD APPLIES TO ALL PRECAST PANELS.

N

DESIGN BY:	UT								
DRAWN BY:	UT								
CHECKED BY:	JL								
APPROVED BY:	JL	4	7/3/2023	ISSUED FOR BID					
CDOT/APPROVED BY:		NO.	DATE	REVISIONS	DES.	DRW.	CHK.	DCCO	CDOT

TRANSYSTEMS
222 SOUTH RIVERSIDE PLAZA SUITE 610
CHICAGO, ILLINOIS 60606

SKIDMORE, OWINGS & MERRILL LLP
224 SOUTH MICHIGAN AVENUE, SUITE 1000
CHICAGO, ILLINOIS 60604

GARZA KARHOFF ENGINEERING, LLC
120 NORTH LASALLE STREET, SUITE 1400
CHICAGO, ILLINOIS 60602

CHICAGO DEPARTMENT OF TRANSPORTATION
DIVISION OF ENGINEERING

STATE / LAKE LOOP ELEVATED STATION
200 NORTH STATE STREET, CHICAGO, IL 60601

SPEC. NO.

PARTIAL PLAN CENTRAL-PRECAST & CAST-IN-PLACE LEVEL

DRAWING NO. S-121

CDOT PROJECT D-1-209

DATE: 7/3/2023

REVISION NO.

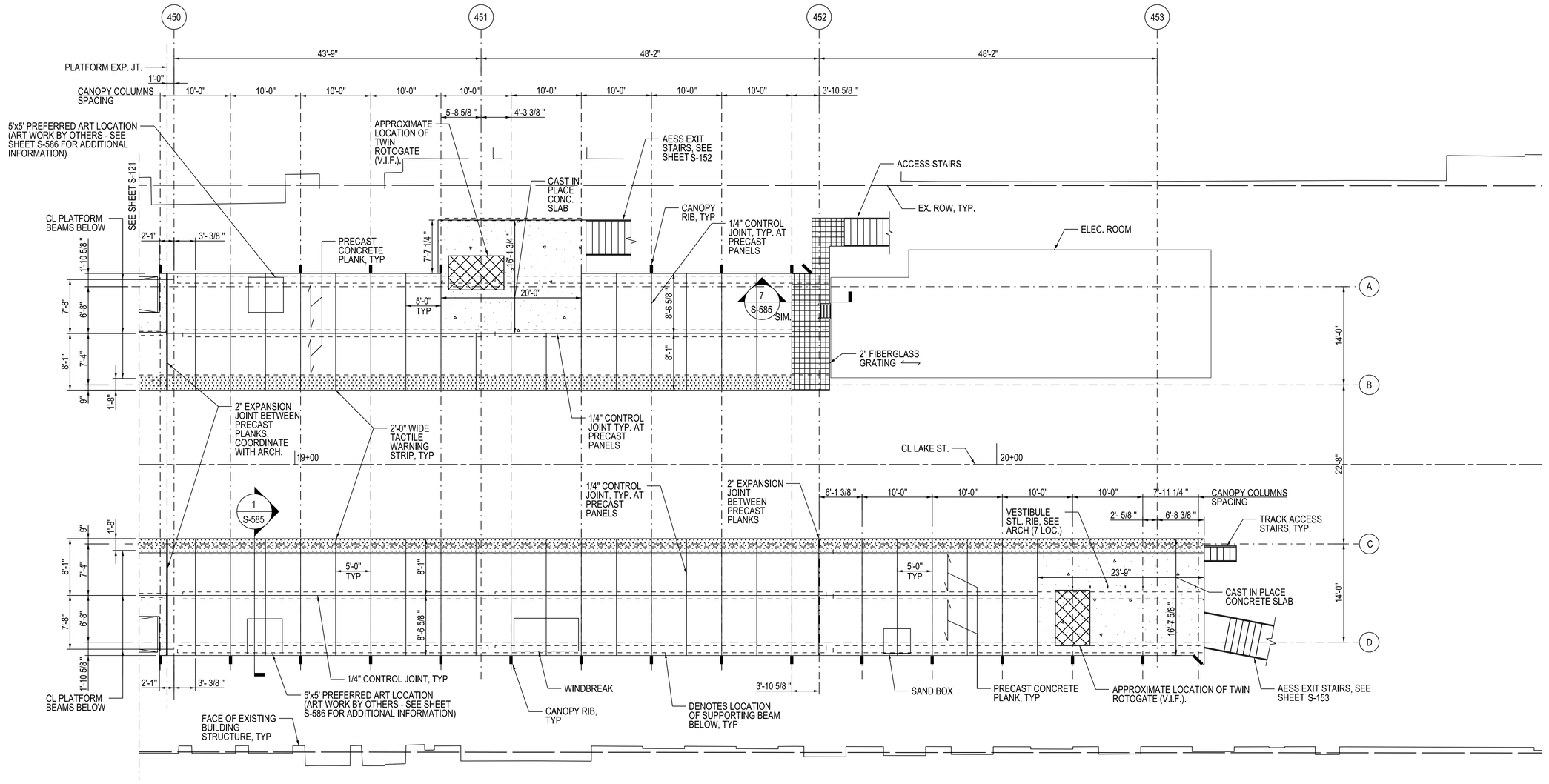

NOTES:

1. FOR PRECAST DETAILS, REFER TO SHEET S-585
2. FOR ALL PRECAST NOTCHES, COORDINATE WITH ARCHITECTURE, MEP, AND STRUCTURAL PLANS PRIOR TO FABRICATION.
3. CONTRACTOR SHALL PROVIDE SHIMS ON ALL SUPPORT BEAMS WITH SHIMS RUNNING EAST-WEST UNDER PRECAST.
4. PRECAST LAYOUT IS APPROXIMATE. SUBMIT FINAL LAYOUT FOR APPROVAL BY THE COMMISSIONER.
5. SEE S-586 TO ADJUST SHIM PLATES FOR HORIZONTAL CONNECTIONS.
6. FOR LOCATIONS OF EMBEDDED PLATES IN PRECAST FOR STRUCTURAL ATTACHMENTS, SEE DETAILS AND KEY PLAN COORDINATE WITH ARCH.
7. OPENINGS THROUGH PRECAST PLANKS LESS THAN 2" DIA. TO BE DESIGNED/COORDINATED BY CONTRACTOR. SUCH OPENINGS SHALL AVOID REINFORCEMENT AND STEEL FRAMING BELOW.
8. FOR CAST IN PLACE CONCRETE, REFER TO SHEET S-587 FOR DETAILS.
9. ALL STEEL BEAMS SUPPORTING CAST IN PLACE FORMED CONCRETE SHALL HAVE A MIN. 3/4" DIA. x 5" LONG STUDS @ 12" O.C. U.N.O.

1 PLATFORM PRECAST PLANK & CAST-IN-PLACE PLAN - PARTIAL EAST

1/8" = 1'-0"

PRECAST DESIGN LOADS

1. SUPER IMPOSED DEAD LOAD:		25 PSF
2. LIVE LOAD:		100 PSF OR 3 KIP + 30 PSF
3. GLANCING BLOW:		4K OVER 5FT LENGTH APPLIED TO HORIZ. EDGE IN N-S DIR. ALONG TRACK
4. LOADS IMPOSED - SEE PLAN FOR APPROXIMATE LOCATION		
A.	ROTOGATE	1,500 LBS POINT LOAD AT THE CENTER OF ROTOGATE, SEE ARCH SPECS
B.	SAND BOX (MOVING)	3.5 KIPS OVER 3'-4"X2'-8" AREA
C.	WINDBREAK	DL= 1 KIPS, W=±1.5 KIPS (PER POST)
D.	ART BY DCASE	FOR REQUIREMENTS AND COORDINATION SEE SHEET S-586

5. COORDINATE MISC. LOADS AND REQUIRED NOTCHES, INSERTS, EMBEDS, AND ACCESSORIES WITH MANUFACTURERS DATA SHEET SUBMITTALS, AND OTHER CONTRACT DOCUMENTS.
6. REFER TO S-568, ARCH. AND CT DWGS FOR LOCATION OF MISC. LOADS.
7. SAND BOX MOVING LOAD APPLIES TO ALL PRECAST PANELS.

N

DESIGN BY:	EG									
DRAWN BY:	EG									
CHECKED BY:	BGK									
APPROVED BY:		4	7/3/2023	ISSUED FOR BID						
CDOT/APPROVED BY:		NO.	DATE	REVISIONS	DES.	DRW.	CHK.	DCCO	CDOT	

TRANSYSTEMS
222 SOUTH RIVERSIDE PLAZA SUITE 610
CHICAGO, ILLINOIS 60606

SKIDMORE, OWINGS & MERRILL LLP
224 SOUTH MICHIGAN AVENUE, SUITE 1000
CHICAGO, ILLINOIS 60604

GARZA KARHOFF ENGINEERING, LLC
120 NORTH LASALLE STREET, SUITE 1400
CHICAGO, ILLINOIS 60602

CHICAGO DEPARTMENT OF TRANSPORTATION
DIVISION OF ENGINEERING

STATE / LAKE LOOP ELEVATED STATION
200 NORTH STATE STREET, CHICAGO, IL 60601

PARTIAL PLAN EAST - PRECAST & CAST-IN-PLACE LEVEL

CDOT PROJECT D-1-209 | DATE: 7/3/2023

SPEC. NO.

DRAWING NO. S-122

REVISION NO.

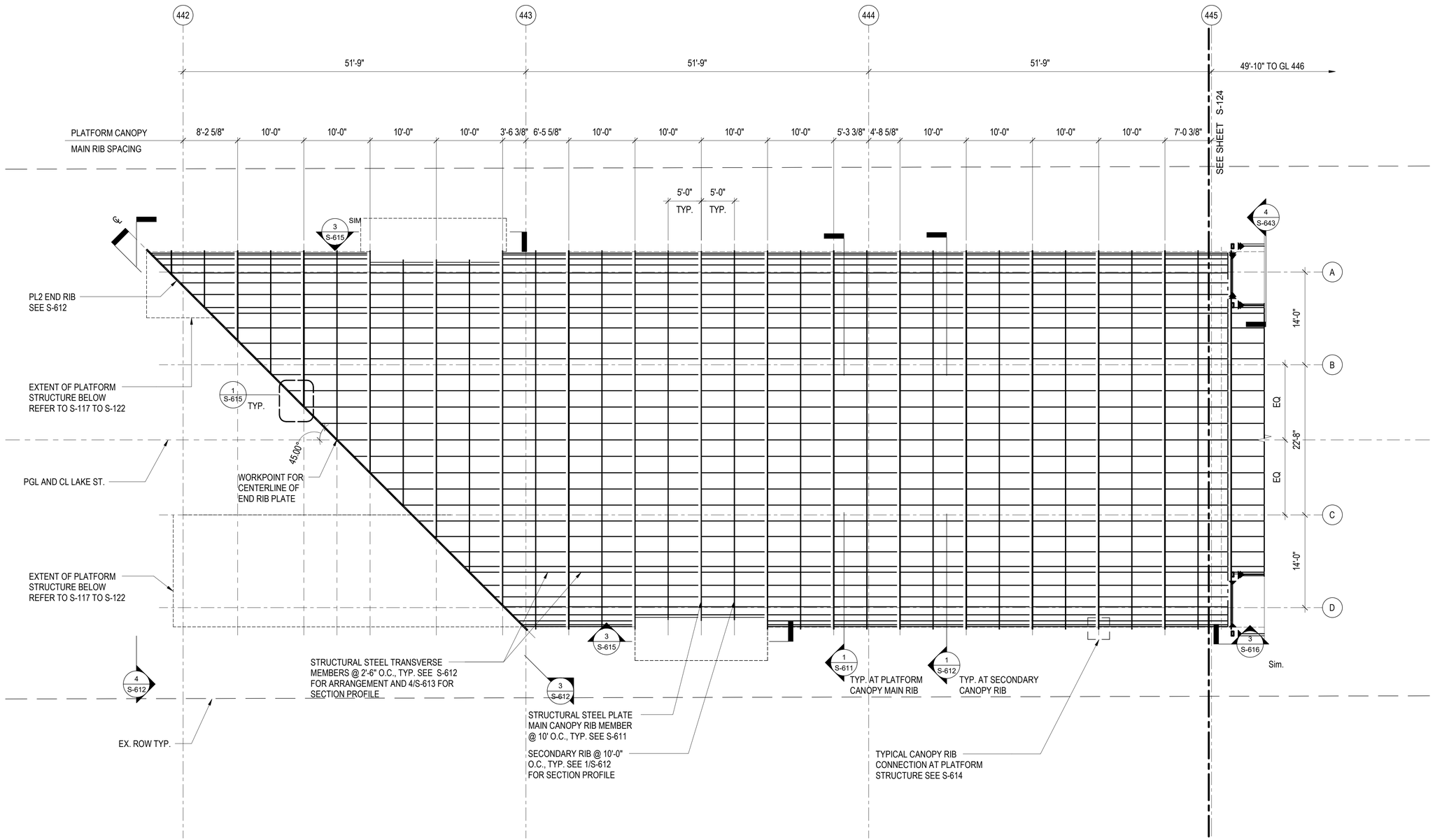

NOTES:
1. REFER TO SHEETS S-600 & S-601 FOR DESCRIPTION OF TYPICAL PLATFORM CANOPY STRUCTURE
2. REFER TO SHEETS S-600 & S-603 FOR SPECIAL CANOPY NOTES.
3. REFER TO SHEETS S-610 TO S-617 FOR PLATFORM CANOPY SUBASSEMBLY DETAILS
4. REFER TO ARCHITECTURAL DRAWINGS FOR PLATFORM CANOPY GLAZING DETAILS

1 CANOPY STRUCTURE PLAN - PARTIAL PLAN WEST

1/8" = 1'-0"

DESIGN BY:									
DRAWN BY:									
CHECKED BY:		4	7/3/2023	ISSUED FOR BID					
APPROVED BY:		1	11/4/2022	ISSUED FOR PERMIT REVISION 1					
CDOT/APPROVED BY:		0	9/9/2022	ISSUED FOR PERMIT	MC	MW	BY		
		NO.	DATE	REVISIONS	DES.	DRW.	CHK.	DCCO	CDOT

TRANSYSTEMS
222 SOUTH RIVERSIDE PLAZA SUITE 610
CHICAGO, ILLINOIS 60606

SKIDMORE, OWINGS & MERRILL LLP
224 SOUTH MICHIGAN AVENUE, SUITE 1000
CHICAGO, ILLINOIS 60604

CHICAGO DEPARTMENT
OF TRANSPORTATION
DIVISION OF ENGINEERING

STATE / LAKE LOOP ELEVATED STATION
200 NORTH STATE STREET, CHICAGO, IL 60601

SPEC. NO.

PARTIAL PLAN WEST - CANOPY

DRAWING NO.
S-123

CDOT PROJECT D-1-209 | DATE: 9/9/2022 | REVISION NO.4

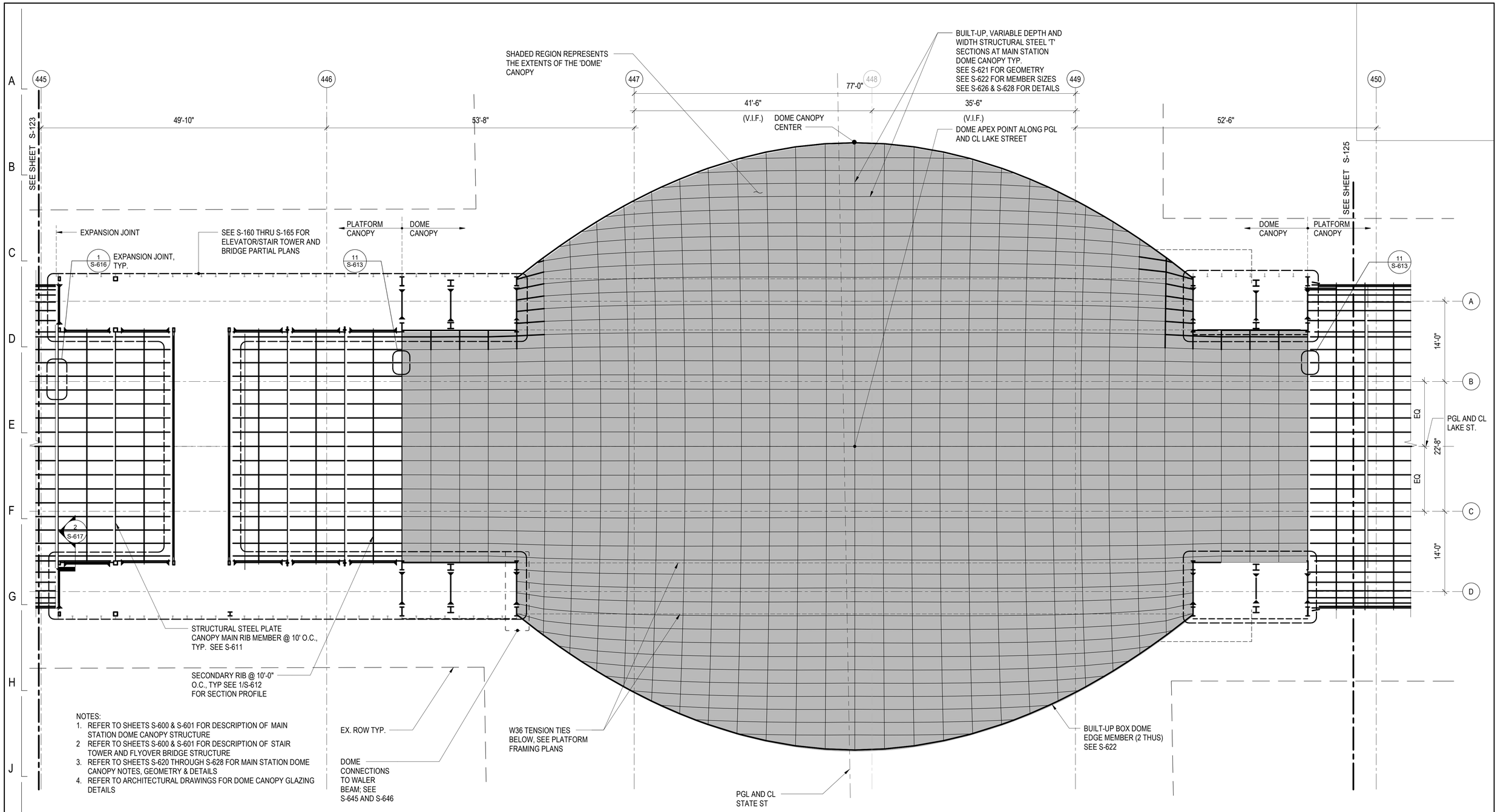

NOTES:
1. REFER TO SHEETS S-600 & S-601 FOR DESCRIPTION OF MAIN STATION DOME CANOPY STRUCTURE
2. REFER TO SHEETS S-600 & S-601 FOR DESCRIPTION OF STAIR TOWER AND FLYOVER BRIDGE STRUCTURE
3. REFER TO SHEETS S-620 THROUGH S-628 FOR MAIN STATION DOME CANOPY NOTES, GEOMETRY & DETAILS
4. REFER TO ARCHITECTURAL DRAWINGS FOR DOME CANOPY GLAZING DETAILS

1 CANOPY STRUCTURE PLAN - PARTIAL PLAN CENTRAL
1/8" = 1'-0"

NO.	DATE	REVISIONS	DES.	DRW.	CHK.	DCCO	CDOT
4	7/3/2023	ISSUED FOR BID					
1	11/4/2022	ISSUED FOR PERMIT REVISION 1					
0	9/9/2022	ISSUED FOR PERMIT	MC	MW	BY		

DESIGN BY:
DRAWN BY:
CHECKED BY:
APPROVED BY:
CDOT/APPROVED BY:

TRANSYSTEMS
222 SOUTH RIVERSIDE PLAZA SUITE 610
CHICAGO, ILLINOIS 60606

SKIDMORE, OWINGS & MERRILL LLP
224 SOUTH MICHIGAN AVENUE, SUITE 1000
CHICAGO, ILLINOIS 60604

CHICAGO DEPARTMENT OF TRANSPORTATION
DIVISION OF ENGINEERING

STATE / LAKE LOOP ELEVATED STATION
200 NORTH STATE STREET, CHICAGO, IL 60601

PARTIAL PLAN CENTRAL - CANOPY

CDOT PROJECT D-1-209 | DATE: 9/9/2022

SPEC. NO.

DRAWING NO. S-124

REVISION NO.4

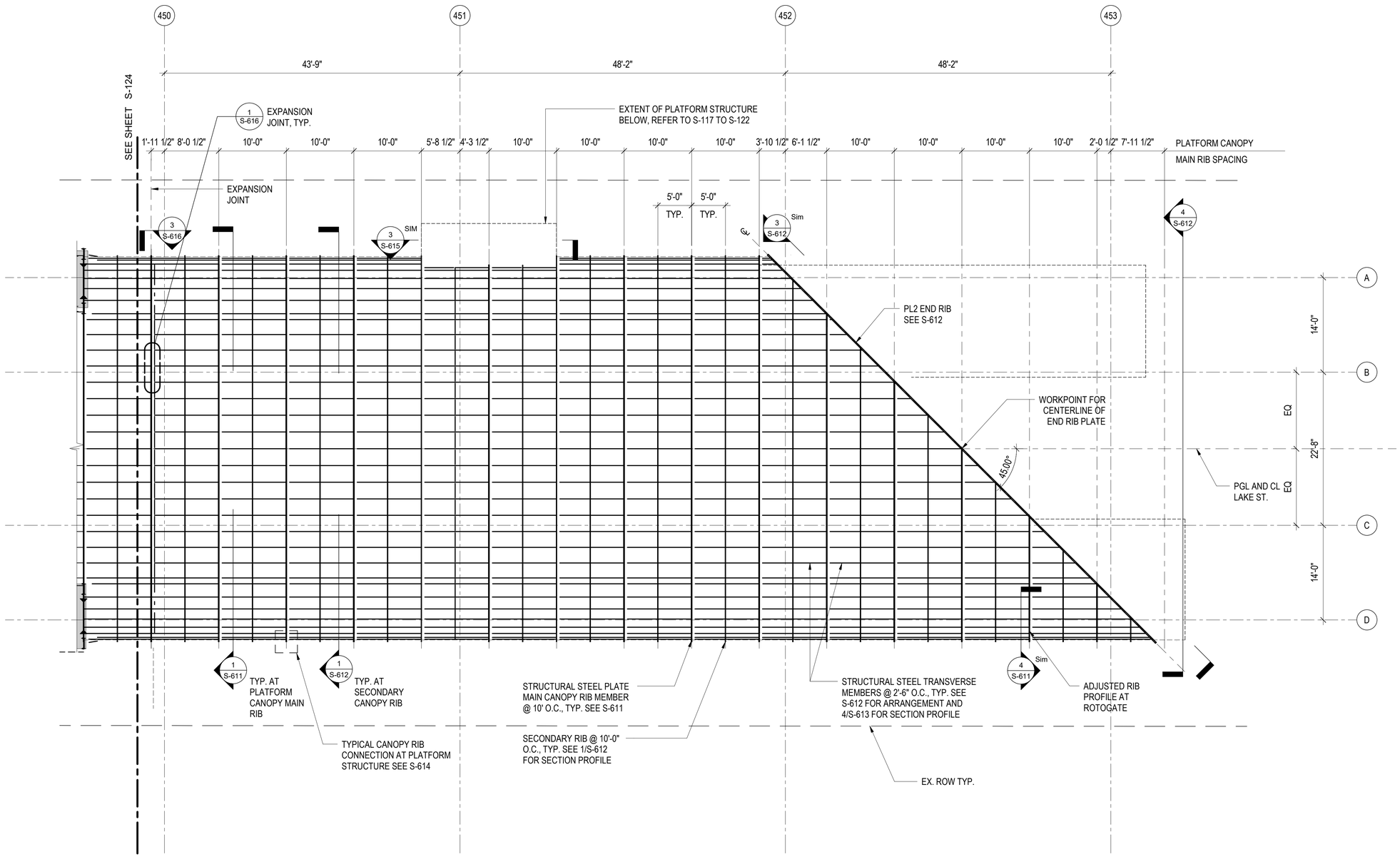

NOTES:
1. REFER TO SHEETS S-600 & S-601 FOR DESCRIPTION OF TYPICAL PLATFORM CANOPY STRUCTURE
2 REFER TO SHEETS S-600 & S-603 FOR SPECIAL CANOPY NOTES.
3. REFER TO SHEETS S-610 TO S-617 FOR PLATFORM CANOPY SUBASSEMBLY DETAILS
4. REFER TO ARCHITECTURAL DRAWINGS FOR PLATFORM CANOPY GLAZING DETAILS

1 CANOPY STRUCTURE PLAN - PARTIAL PLAN EAST
1/8" = 1'-0"

LAKE ST. KEY PLAN:

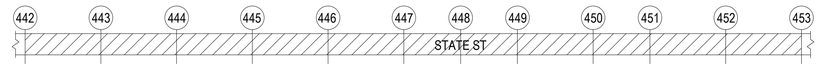

DESIGN BY:									
DRAWN BY:									
CHECKED BY:		4	7/3/2023	ISSUED FOR BID					
APPROVED BY:		1	11/4/2022	ISSUED FOR PERMIT REVISION 1					
CDOT/APPROVED BY:		0	9/9/2022	ISSUED FOR PERMIT	MC	MW	BY		
		NO.	DATE	REVISIONS	DES.	DRW.	CHK.	DCCO	CDOT

TRANSYSTEMS
222 SOUTH RIVERSIDE PLAZA SUITE 610
CHICAGO, ILLINOIS 60606

SKIDMORE, OWINGS & MERRILL LLP
224 SOUTH MICHIGAN AVENUE, SUITE 1000
CHICAGO, ILLINOIS 60604

CHICAGO DEPARTMENT OF TRANSPORTATION
DIVISION OF ENGINEERING

STATE / LAKE LOOP ELEVATED STATION
200 NORTH STATE STREET, CHICAGO, IL 60601

SPEC. NO.

PARTIAL PLAN EAST - CANOPY

DRAWING NO.
S-125

CDOT PROJECT D-1-209

DATE: 9/9/2022

REVISION NO. 4

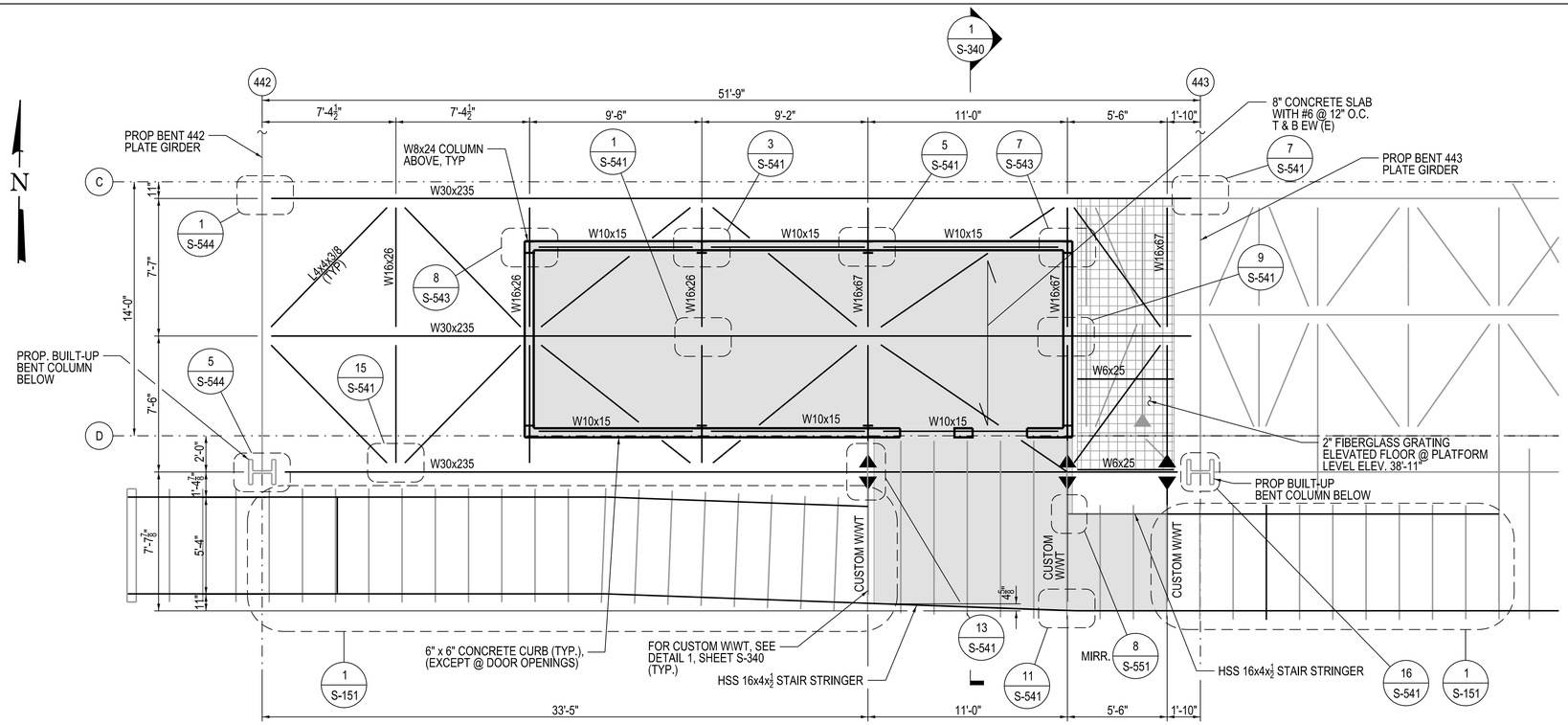

1 COMM ROOM FLOOR FRAMING PLAN

1/4 " = 1'-0"

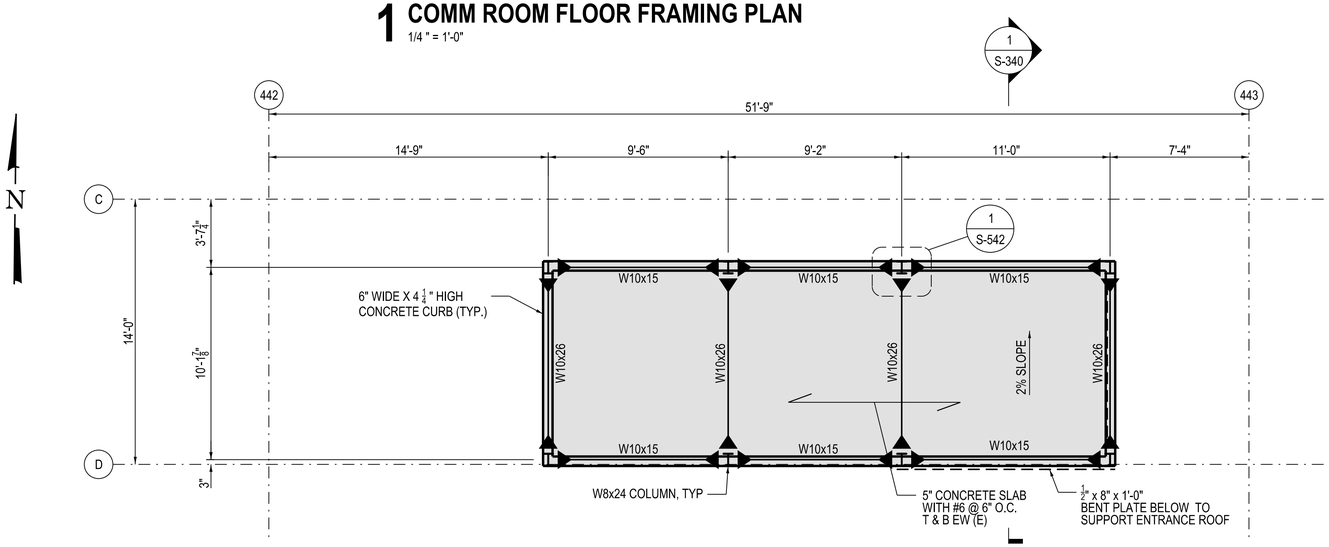

2 COMM ROOM ROOF FRAMING PLAN

1/4 " = 1'-0"

NOTES:

1. FOR DETAILS OF TRACK ACCESS STAIRS AND PLATFORM, SEE SHEET S-537 .
2. T.O.S. ELEVATION FOR COMM ROOM FLOOR FRAMING IS 31.08'.
3. T. O. FLOOR SLAB ELEVATION IS 31.75'.
4. FOR CAST IN PLACE CONCRETE SLAB AND CURB DETAILS, SEE SHEET S-540 .

DESIGN BY:	IS/MD								
DRAWN BY:	CMD								
CHECKED BY:	DKS								
APPROVED BY:	WJC	4	7/3/2023	ISSUED FOR BID					
CDOT/APPROVED BY:		NO.	DATE	REVISIONS	DES.	DRW.	CHK.	DCCO	CDOT

TRANSYSTEMS
222 SOUTH RIVERSIDE PLAZA SUITE 610
CHICAGO, ILLINOIS 60606

SKIDMORE, OWINGS & MERRILL LLP
224 SOUTH MICHIGAN AVENUE, SUITE 1000
CHICAGO, ILLINOIS 60604

CHICAGO DEPARTMENT OF TRANSPORTATION
DIVISION OF ENGINEERING

STATE / LAKE LOOP ELEVATED STATION
200 NORTH STATE STREET, CHICAGO, IL 60601

SPEC. NO.

COMMUNICATIONS ROOM PARTIAL PLANS

DRAWING NO. S-140

CDOT PROJECT D-1-209

DATE: 7/3/2023

REVISION NO.

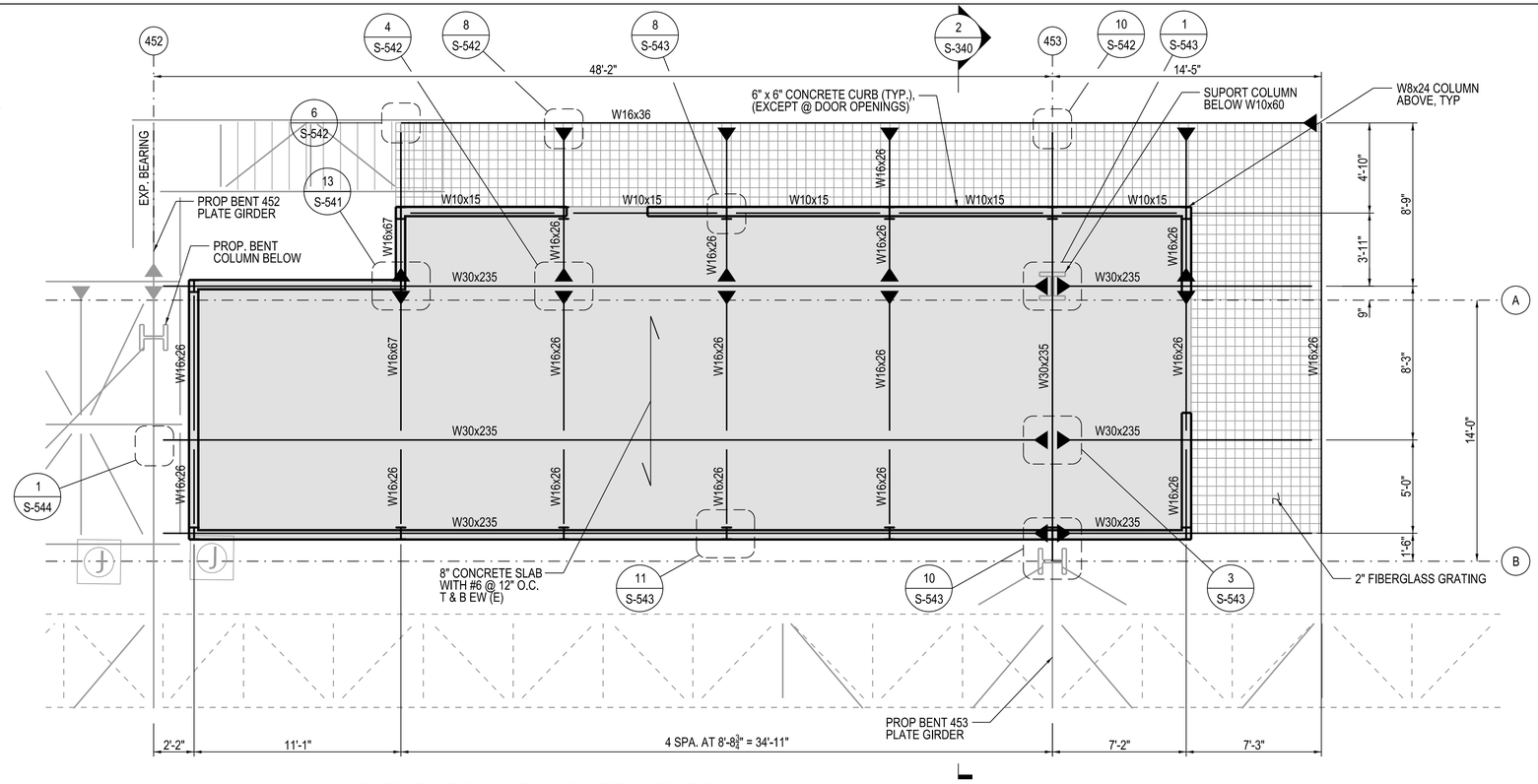

1 ELEC ROOM FLOOR FRAMING PLAN

1/4" = 1'-0"

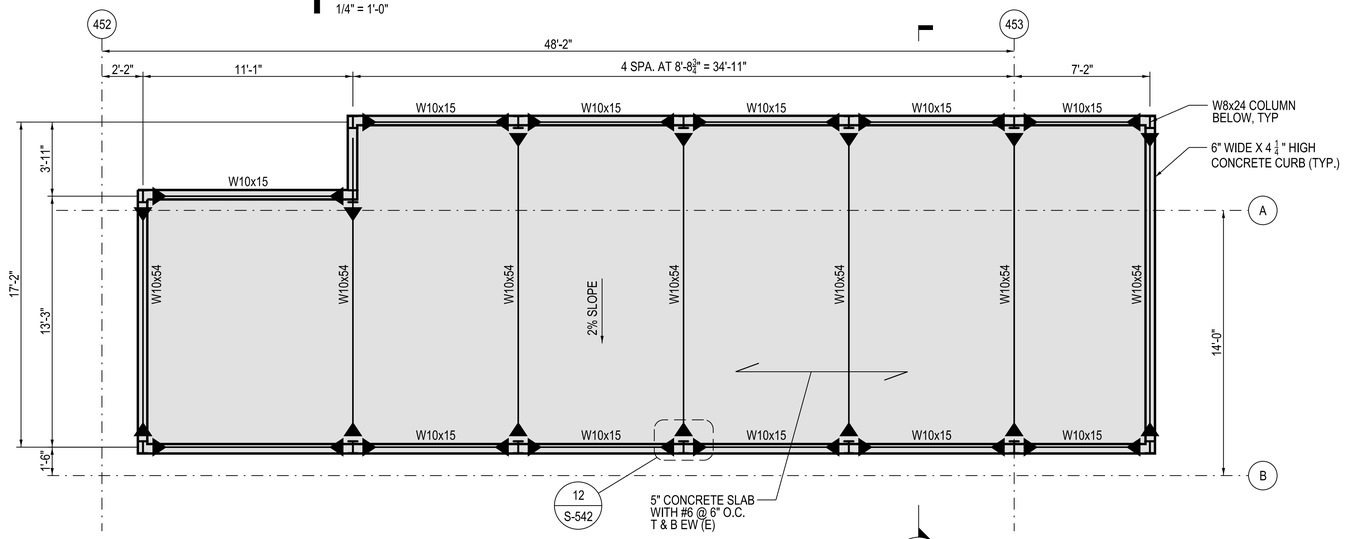

2 ELEC ROOM ROOF FRAMING PLAN

1/4 " = 1'-0"

NOTES:

1. FOR DETAILS OF TRACK ACCESS STAIRS AND PLATFORM, SEE SHEET S-538.
2. T.O.S. ELEVATION FOR COMM ROOM FLOOR FRAMING IS 31.03'.
3. T. O. FLOOR SLAB ELEVATION IS 31.70'.
4. FOR CAST IN PLACE CONCRETE SLAB AND CURB DETAILS, SEE SHEET S-540.

DESIGN BY:	IS/MD								
DRAWN BY:	CMD								
CHECKED BY:	DKS								
APPROVED BY:	WJC	4	7/3/2023	ISSUED FOR BID					
CDOT/APPROVED BY:		NO.	DATE	REVISIONS	DES.	DRW.	CHK.	DCCO	CDOT

TRANSYSTEMS
222 SOUTH RIVERSIDE PLAZA SUITE 610
CHICAGO, ILLINOIS 60606

SKIDMORE, OWINGS & MERRILL LLP
224 SOUTH MICHIGAN AVENUE, SUITE 1000
CHICAGO, ILLINOIS 60604

CHICAGO DEPARTMENT OF TRANSPORTATION
DIVISION OF ENGINEERING

STATE / LAKE LOOP ELEVATED STATION
200 NORTH STATE STREET, CHICAGO, IL 60601

SPEC. NO.

ELECTRICAL ROOM PARTIAL PLANS

DRAWING NO. S-141

CDOT PROJECT D-1-209

DATE: 7/3/2023

REVISION NO.

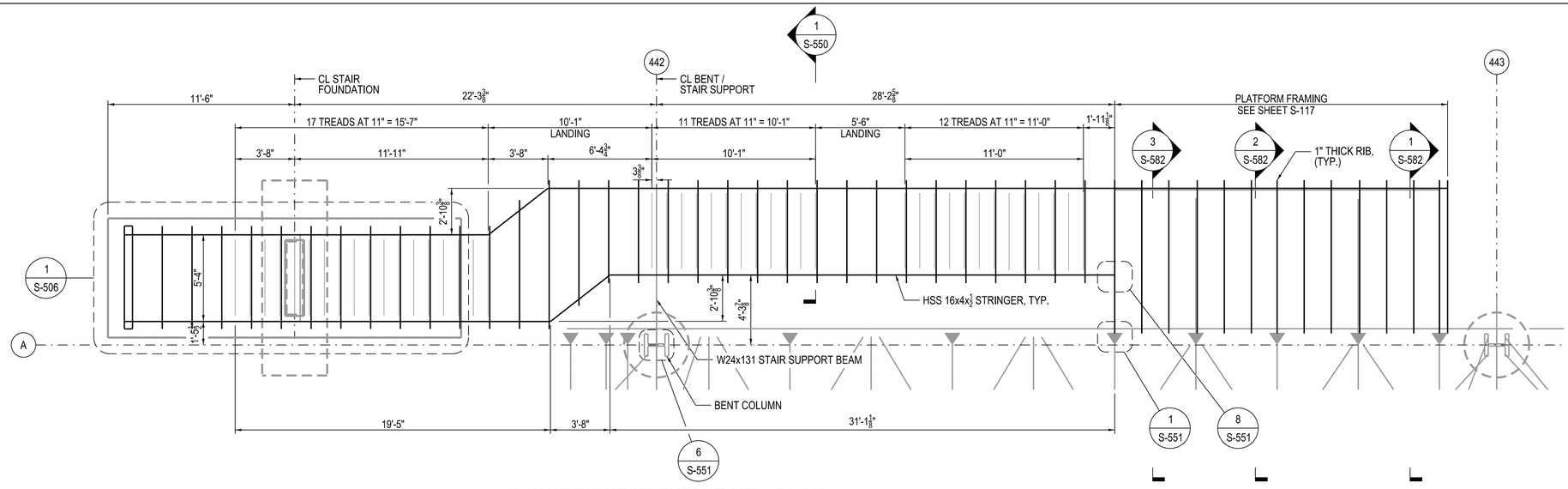

1 NORTHWEST EXIT STAIR - PLAN

1/4" = 1'-0"

NOTES:

1. SEE ARCHITECTURAL DRAWINGS FOR ADDITIONAL DIMENSIONAL DETAILS FOR STAIR STRUCTURES.

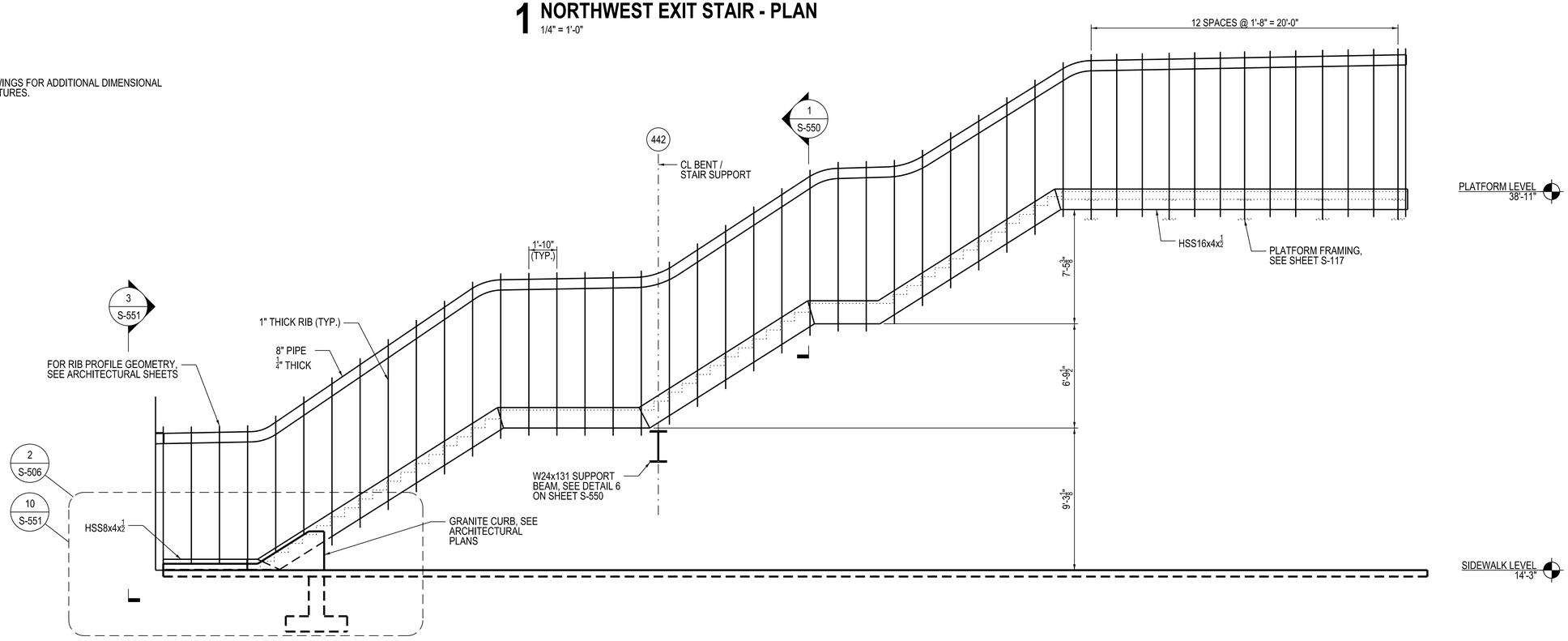

2 NORTHWEST EXIT STAIR - ELEVATION

1/4" = 1'-0" (LOOKING SOUTH, MIRRORED)

DESIGN BY:	IS/MD								
DRAWN BY:	CMD								
CHECKED BY:	DKS								
APPROVED BY:	WJC	4	7/3/2023	ISSUED FOR BID					
CDOT/APPROVED BY:		NO.	DATE	REVISIONS	DES.	DRW.	CHK.	DCCO	CDOT

TRANSYSTEMS
222 SOUTH RIVERSIDE PLAZA SUITE 610
CHICAGO, ILLINOIS 60606

SKIDMORE, OWINGS & MERRILL LLP
224 SOUTH MICHIGAN AVENUE, SUITE 1000
CHICAGO, ILLINOIS 60604

CHICAGO DEPARTMENT OF TRANSPORTATION
DIVISION OF ENGINEERING

STATE / LAKE LOOP ELEVATED STATION
200 NORTH STATE STREET, CHICAGO, IL 60601

EXIT STAIR PLAN AND ELEVATION – NORTHWEST

CDOT PROJECT D-1-209

DATE: 7/3/2023

SPEC. NO.

DRAWING NO. S-150

REVISION NO.

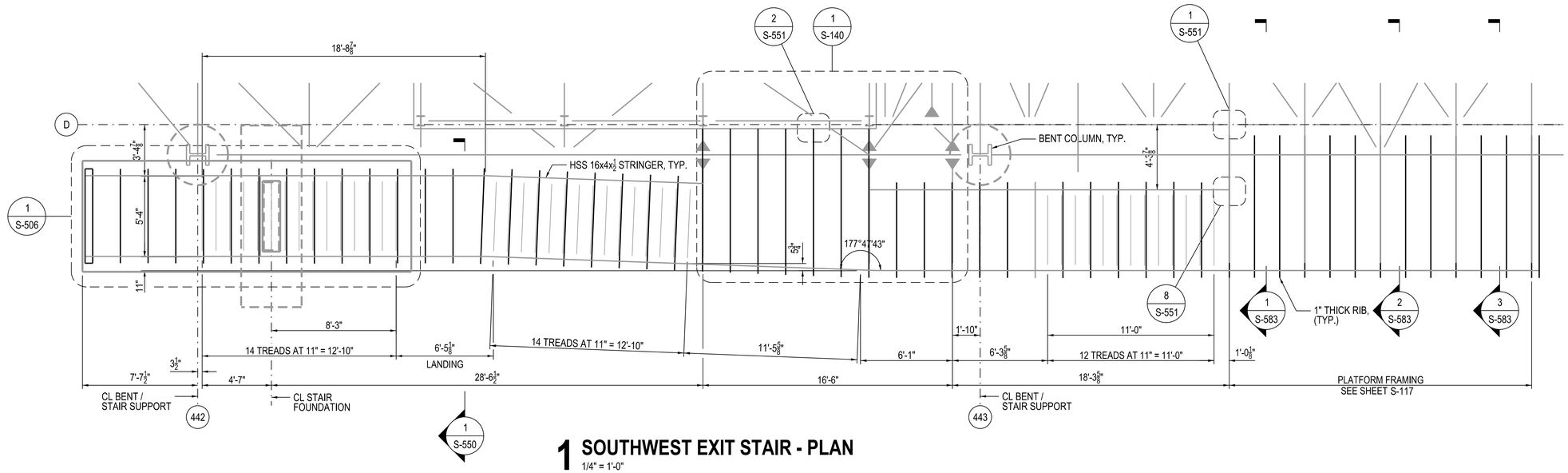

1 SOUTHWEST EXIT STAIR - PLAN

1/4" = 1'-0"

NOTES:

1. SEE ARCHITECTURAL DRAWINGS FOR ADDITIONAL DIMENSIONAL DETAILS FOR STAIR STRUCTURES.

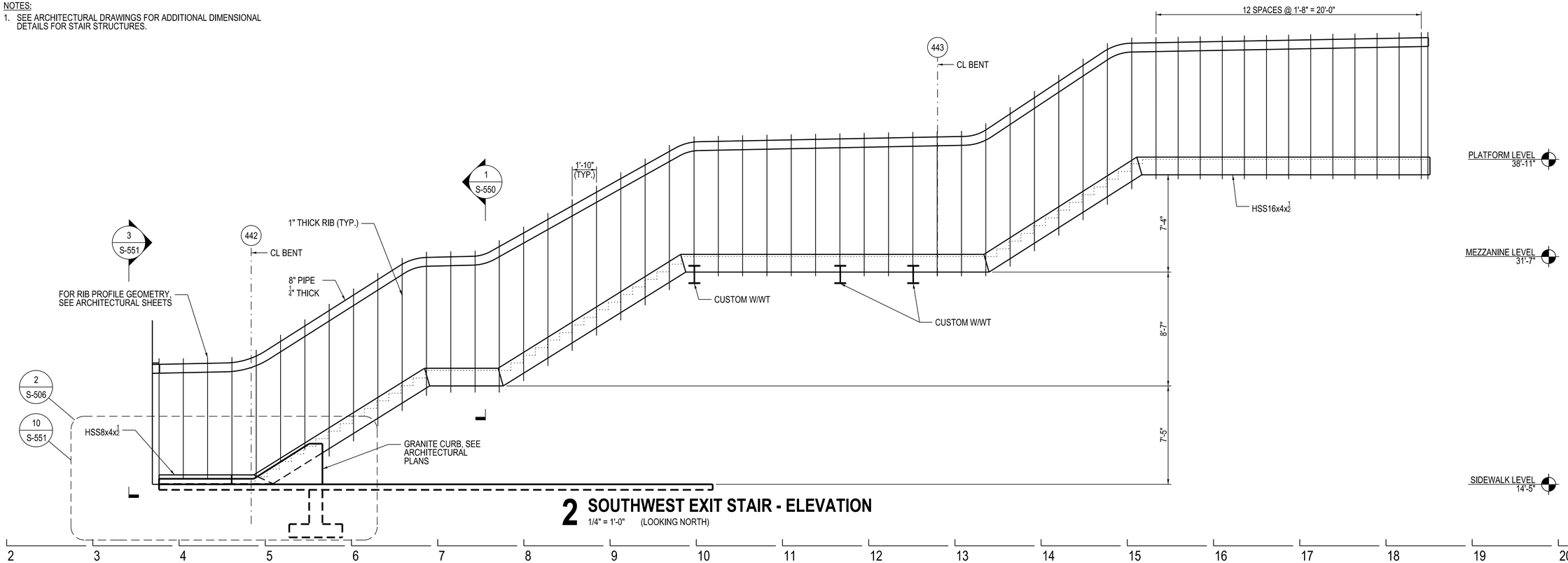

2 SOUTHWEST EXIT STAIR - ELEVATION

1/4" = 1'-0" (LOOKING NORTH)

DESIGN BY:	IS/MD								
DRAWN BY:	CMD								
CHECKED BY:	DKS								
APPROVED BY:	WJC	4	7/3/2023	ISSUED FOR BID					
CDOT/APPROVED BY:		NO.	DATE	REVISIONS	DES.	DRW.	CHK.	DCCO	CDOT

TRANSYSTEMS
222 SOUTH RIVERSIDE PLAZA SUITE 610
CHICAGO, ILLINOIS 60606

SKIDMORE, OWINGS & MERRILL LLP
224 SOUTH MICHIGAN AVENUE, SUITE 1000
CHICAGO, ILLINOIS 60604

CHICAGO DEPARTMENT OF TRANSPORTATION
DIVISION OF ENGINEERING

STATE / LAKE LOOP ELEVATED STATION
200 NORTH STATE STREET, CHICAGO, IL 60601

EXIT STAIR PLAN AND ELEVATION – SOUTHWEST

CDOT PROJECT D-1-209 | DATE: 7/3/2023

SPEC. NO.

DRAWING NO. S-151

REVISION NO.

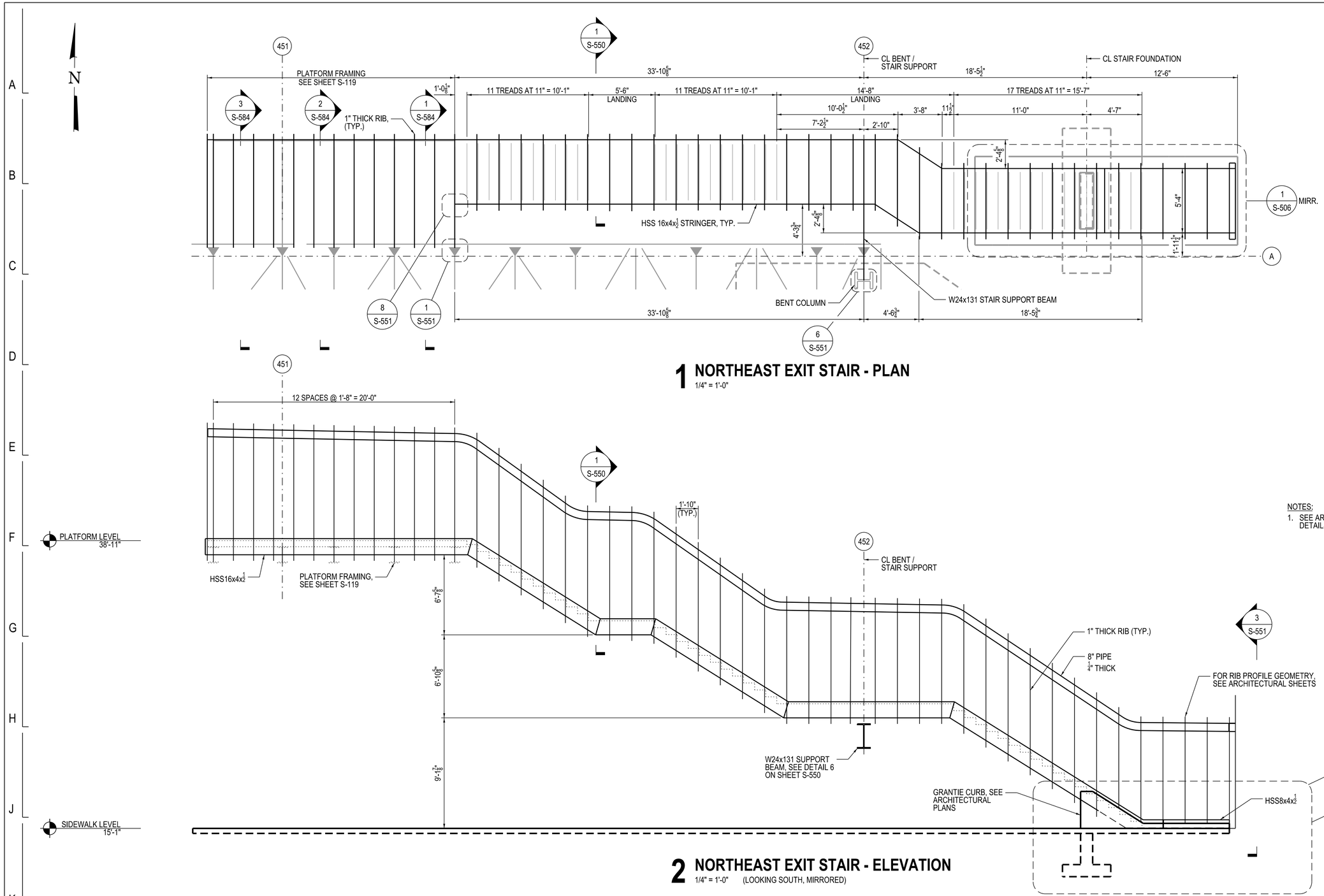

1 NORTHEAST EXIT STAIR - PLAN

1/4" = 1'-0"

2 NORTHEAST EXIT STAIR - ELEVATION

1/4" = 1'-0" (LOOKING SOUTH, MIRRORED)

NOTES:

1. SEE ARCHITECTURAL DRAWINGS FOR ADDITIONAL DIMENSIONAL DETAILS FOR STAIR STRUCTURES.

DESIGN BY:	IS/MD								
DRAWN BY:	CMD								
CHECKED BY:	DKS								
APPROVED BY:	WJC	4	7/3/2023	ISSUED FOR BID					
CDOT/APPROVED BY:		NO.	DATE	REVISIONS	DES.	DRW.	CHK.	DCCO	CDOT

TRANSYSTEMS
222 SOUTH RIVERSIDE PLAZA SUITE 610
CHICAGO, ILLINOIS 60606

SKIDMORE, OWINGS & MERRILL LLP
224 SOUTH MICHIGAN AVENUE, SUITE 1000
CHICAGO, ILLINOIS 60604

CHICAGO DEPARTMENT OF TRANSPORTATION
DIVISION OF ENGINEERING

STATE / LAKE LOOP ELEVATED STATION
200 NORTH STATE STREET, CHICAGO, IL 60601

EXIT STAIR PLAN AND ELEVATION – NORTHEAST

CDOT PROJECT D-1-209

DATE: 7/3/2023

SPEC. NO.

DRAWING NO. S-152

REVISION NO.

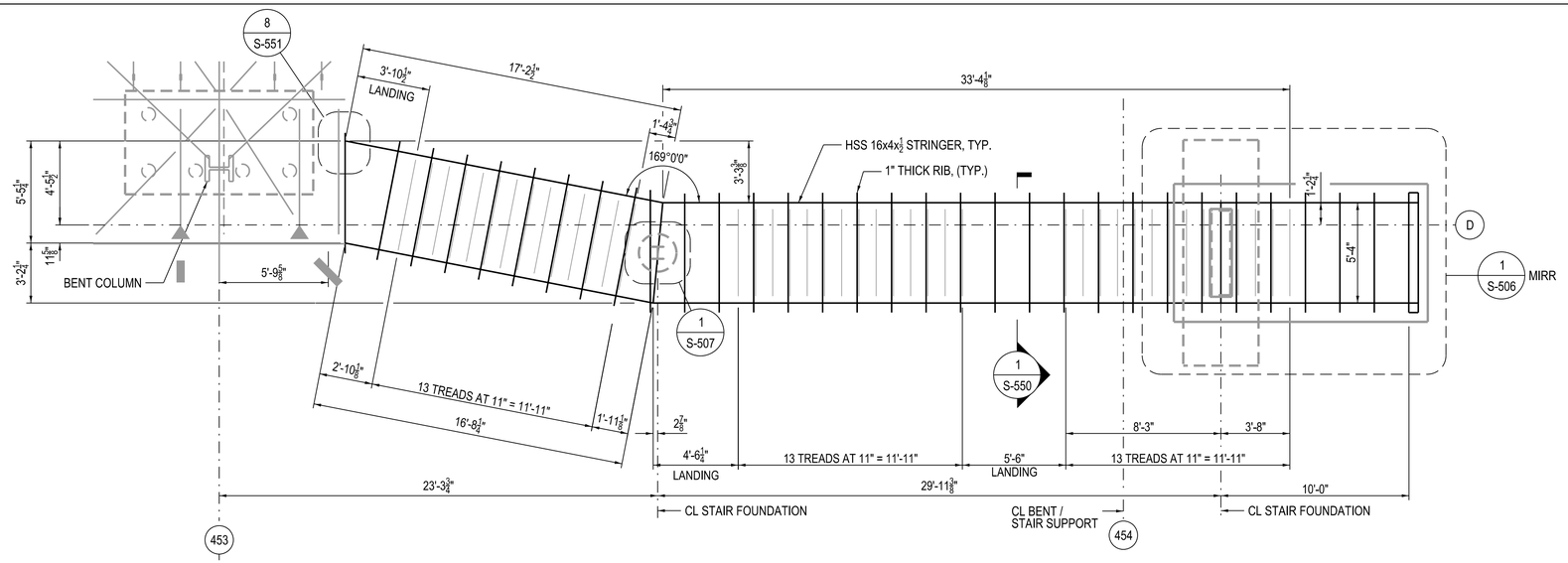

1 SOUTHEAST EXIT STAIR - PLAN

1/4" = 1'-0"

NOTES:

1. SEE ARCHITECTURAL DRAWINGS FOR ADDITIONAL DIMENSIONAL DETAILS FOR STAIR STRUCTURES.

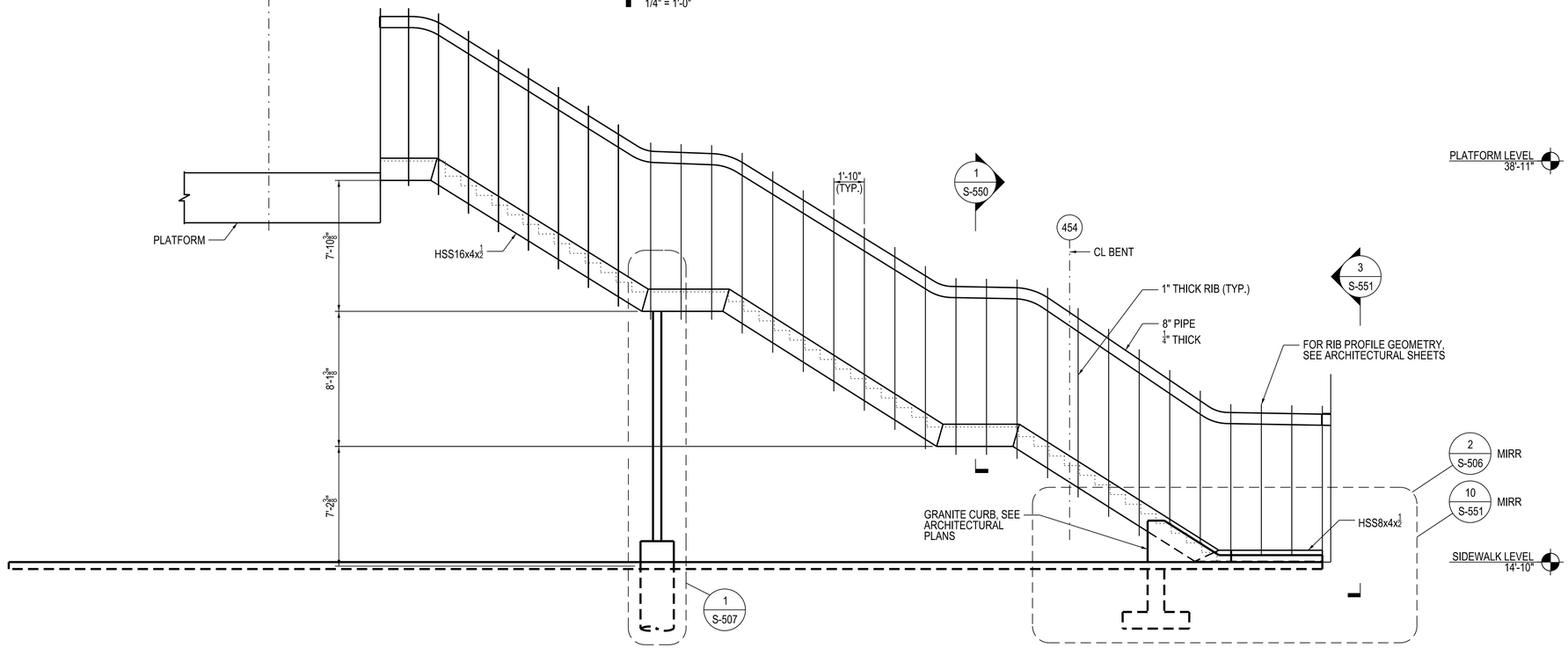

2 SOUTHEAST EXIT STAIR - ELEVATION

1/4" = 1'-0" (LOOKING NORTH)

DESIGN BY:	IS/MD									
DRAWN BY:	CMD									
CHECKED BY:	DKS									
APPROVED BY:	WJC	4	7/3/2023	ISSUED FOR BID						
CDOT/APPROVED BY:		NO.	DATE	REVISIONS	DES.	DRW.	CHK.	DCCO	CDOT	

TRANSYSTEMS
222 SOUTH RIVERSIDE PLAZA SUITE 610
CHICAGO, ILLINOIS 60606

SKIDMORE, OWINGS & MERRILL LLP
224 SOUTH MICHIGAN AVENUE, SUITE 1000
CHICAGO, ILLINOIS 60604

CHICAGO DEPARTMENT
OF TRANSPORTATION
DIVISION OF ENGINEERING

STATE / LAKE LOOP ELEVATED STATION
200 NORTH STATE STREET, CHICAGO, IL 60601

EXIT STAIR PLAN AND ELEVATION – SOUTHEAST

CDOT PROJECT D-1-209

DATE: 7/3/2023

SPEC. NO.

DRAWING NO.
S-153

REVISION NO.

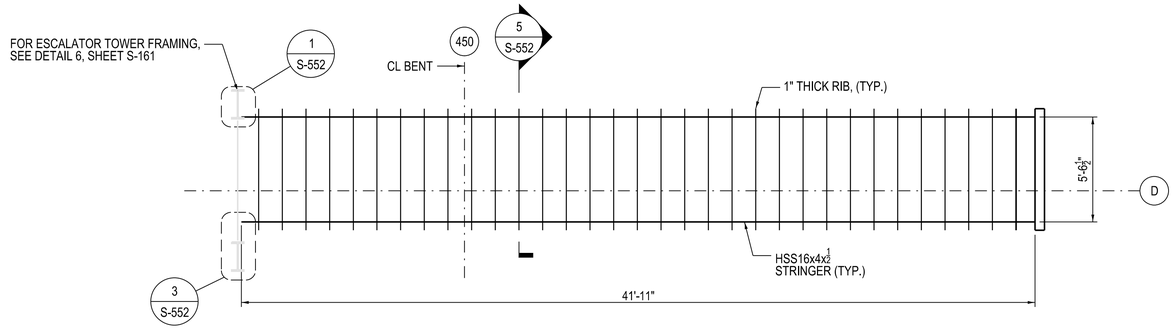

1 ESCALATOR - PLAN
1/4" = 1'-0"

NOTES:
1. SEE ARCHITECTURAL DRAWINGS FOR ADDITIONAL DIMENSIONAL DETAILS FOR ESCALATOR STRUCTURES.
2. SOUTH ESCALATOR SHOWN. NORTH ESCALATOR SIMILAR, BUT MIRRORED.

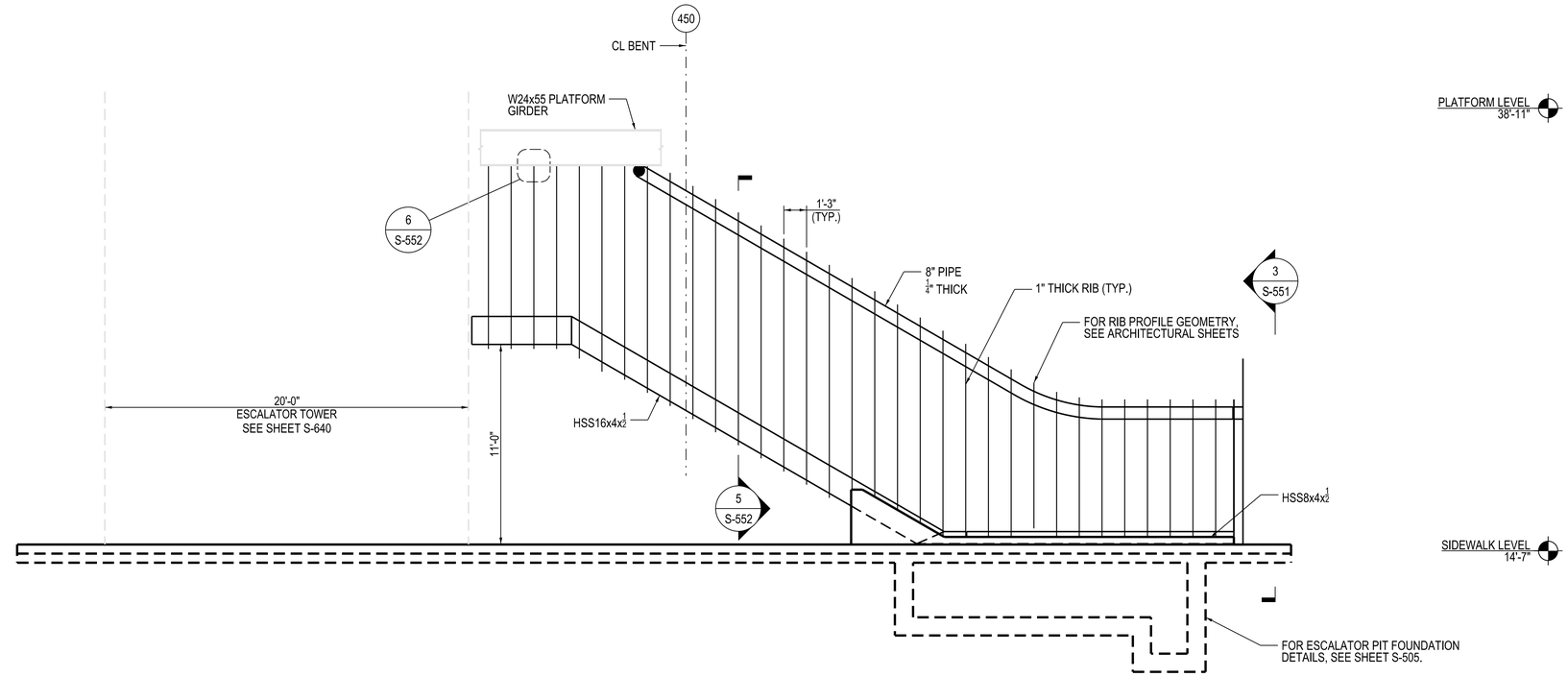

2 ESCALATOR - ELEVATION
1/4" = 1'-0"

DESIGN BY:	IS/MD								
DRAWN BY:	CMD								
CHECKED BY:	DKS								
APPROVED BY:	WJC	4	7/3/2023	ISSUED FOR BID					
CDOT/APPROVED BY:		NO.	DATE	REVISIONS	DES.	DRW.	CHK.	DCCO	CDOT

TRANSYSTEMS
222 SOUTH RIVERSIDE PLAZA SUITE 610
CHICAGO, ILLINOIS 60606

SKIDMORE, OWINGS & MERRILL LLP
224 SOUTH MICHIGAN AVENUE, SUITE 1000
CHICAGO, ILLINOIS 60604

CHICAGO DEPARTMENT OF TRANSPORTATION
DIVISION OF ENGINEERING

STATE / LAKE LOOP ELEVATED STATION
200 NORTH STATE STREET, CHICAGO, IL 60601

ESCALATOR PLAN AND ELEVATION

CDOT PROJECT D-1-209 | DATE: 7/3/2023

SPEC. NO.

DRAWING NO. S-154

REVISION NO.

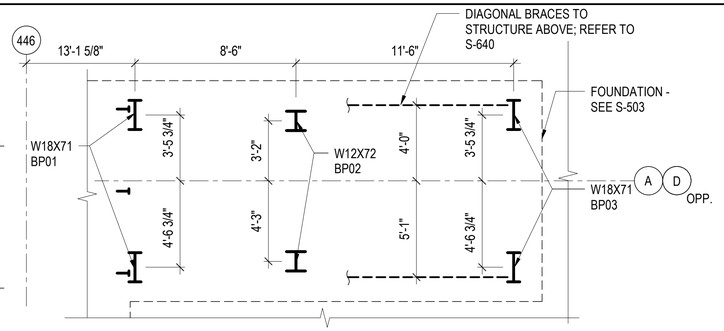

3 WEST ELEVATOR TOWER - PLAN DETAIL

1/4" = 1'-0"

NOTES:
1. TOP OF FOOTING ELEVATION = SEE S-503.
2. "BPX" INDICATES BASE PLATE TYPE, SEE S-662.

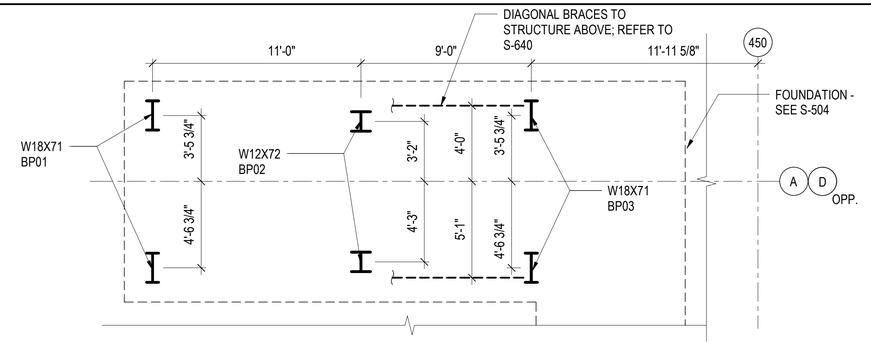

4 EAST ESCALATOR TOWER - PLAN DETAIL

1/4" = 1'-0"

NOTES:
1. TOP OF FOOTING ELEVATION = SEE S-504.
2. "BPX" INDICATES BASE PLATE TYPE, SEE S-662.

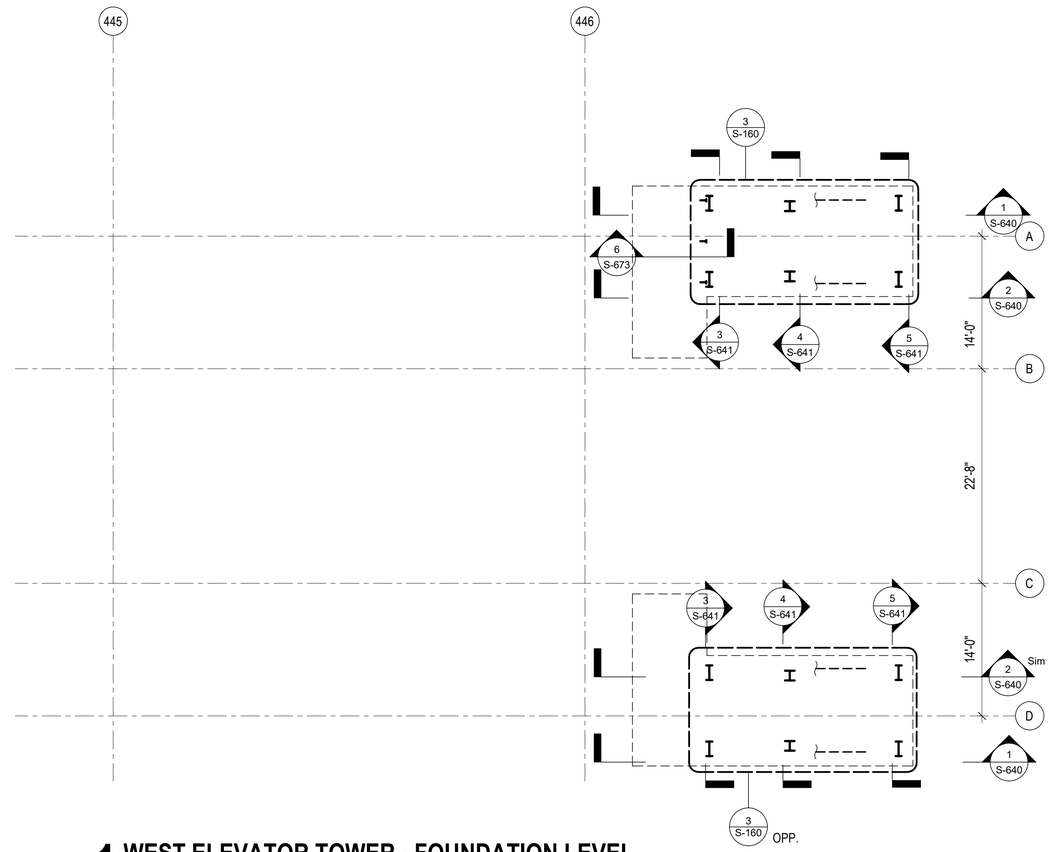

1 WEST ELEVATOR TOWER - FOUNDATION LEVEL

1/8" = 1'-0"

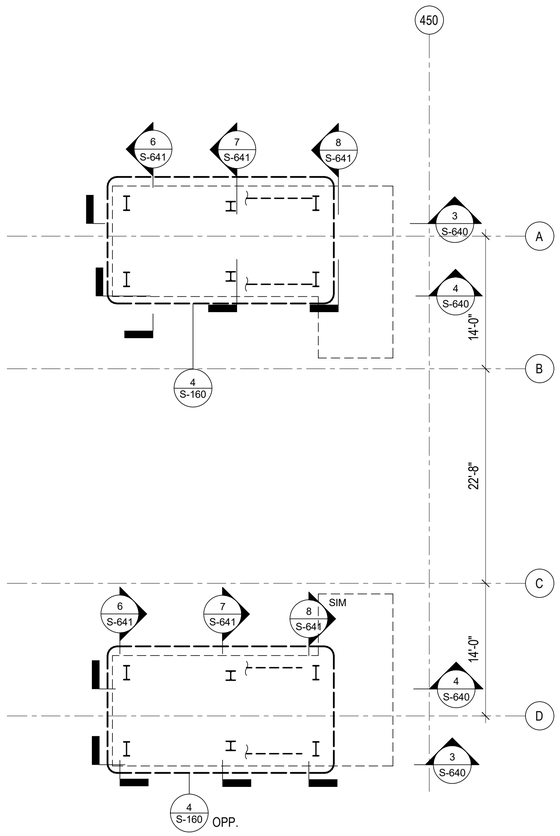

2 EAST ESCALATOR TOWER - FOUNDATION LEVEL

1/8" = 1'-0"

DESIGN BY:										
DRAWN BY:										
CHECKED BY:		4	7/3/2023	ISSUED FOR BID						
APPROVED BY:		1	11/4/2022	ISSUED FOR PERMIT REVISION 1						
CDOT/APPROVED BY:		0	9/9/2022	ISSUED FOR PERMIT	MC	MW	BY			
		NO.	DATE	REVISIONS	DES.	DRW.	CHK.	DCCO	CDOT	

TRANSYSTEMS
222 SOUTH RIVERSIDE PLAZA SUITE 610
CHICAGO, ILLINOIS 60606

SKIDMORE, OWINGS & MERRILL LLP
224 SOUTH MICHIGAN AVENUE, SUITE 1000
CHICAGO, ILLINOIS 60604

CHICAGO DEPARTMENT OF TRANSPORTATION
DIVISION OF ENGINEERING

STATE / LAKE LOOP ELEVATED STATION
200 NORTH STATE STREET, CHICAGO, IL 60601

BRIDGE / TOWER PARTIAL PLANS - FOUNDATION LEVEL

CDOT PROJECT D-1-209 | DATE: 9/9/2022

SPEC. NO.

DRAWING NO. S-160

REVISION NO.4

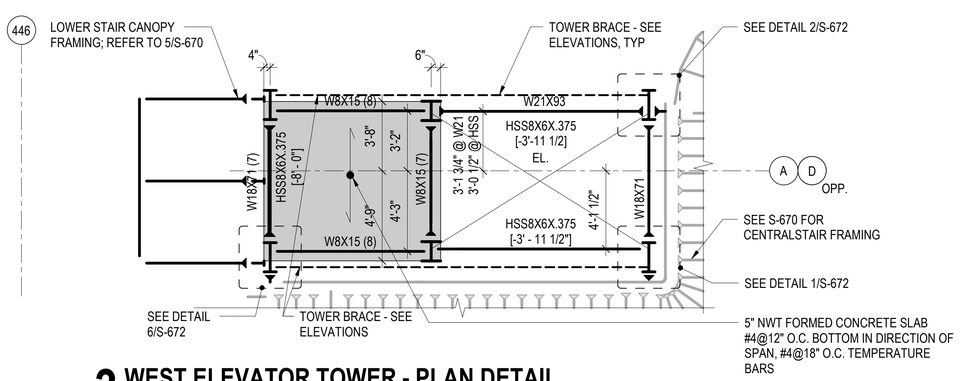

3 WEST ELEVATOR TOWER - PLAN DETAIL

1/4" = 1'-0"

NOTES:
1. T/SLAB ELEV. = +26'-0"
2. T/STEEL ELEV. = +25'-7".
3. SEE S-660 FOR TYPICAL BEAM TO COLUMN CONNECTIONS.

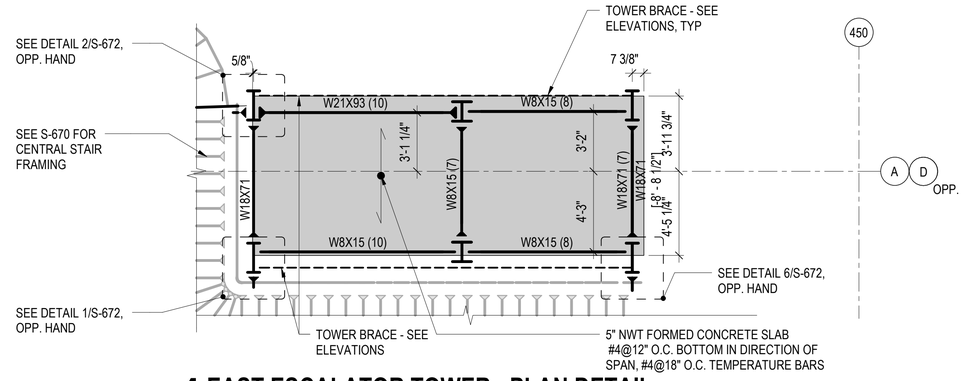

4 EAST ESCALATOR TOWER - PLAN DETAIL

1/4" = 1'-0"

NOTES:
1. T/SLAB ELEV. = +26'-0"
2. T/STEEL ELEV. = +25'-7".

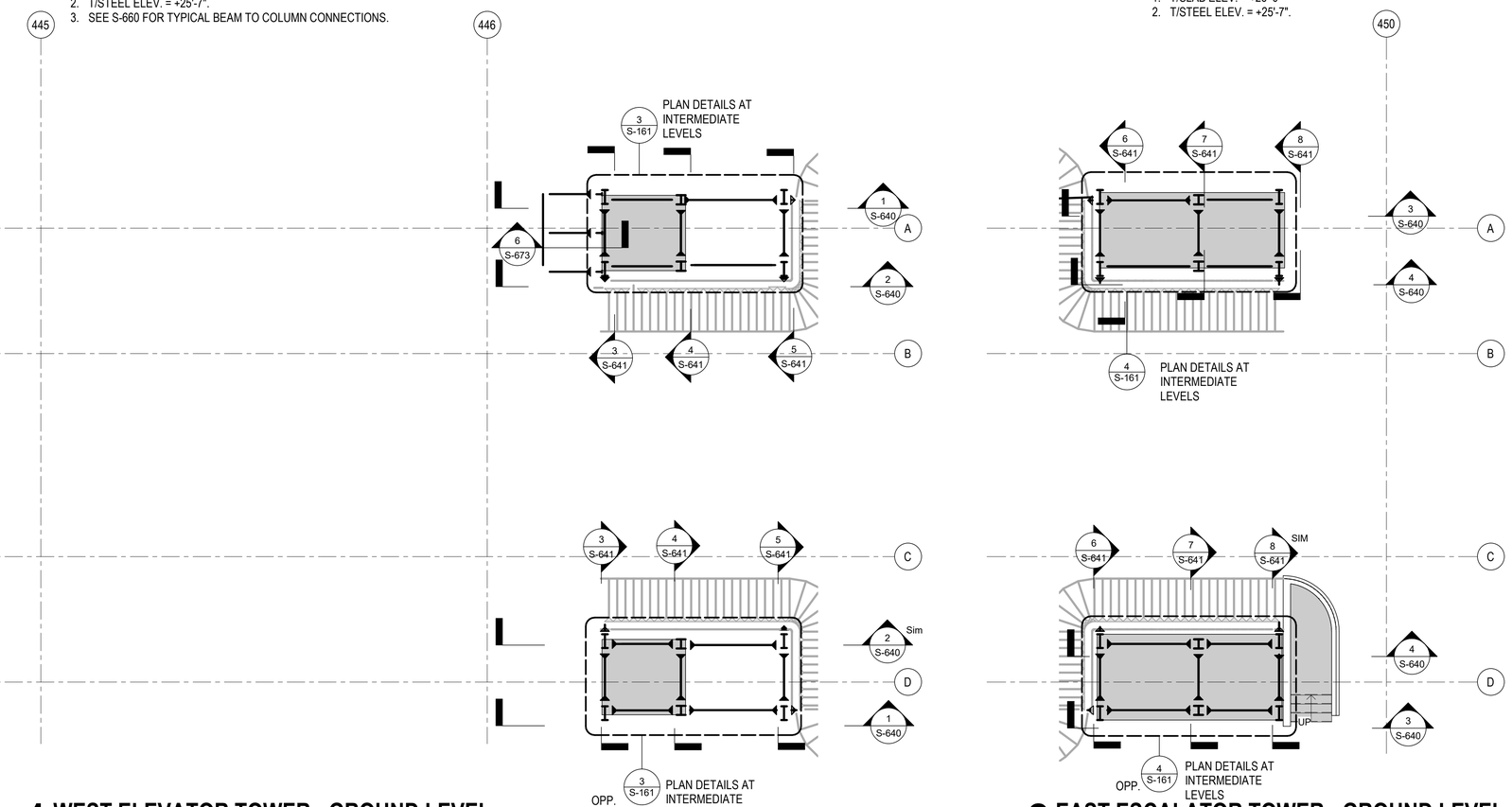

1 WEST ELEVATOR TOWER - GROUND LEVEL

1/8" = 1'-0"

NOTES:
1. "CX" INDICATES BUILT-UP STEEL COLUMN TYPE, SEE S-662.
2. "BPX" INDICATES BASE PLATE TYPE, SEE S-662.

2 EAST ESCALATOR TOWER - GROUND LEVEL

1/8" = 1'-0"

NOTES:
1. "CX" INDICATES BUILT-UP STEEL COLUMN TYPE, SEE S-662.
2. "BPX" INDICATES BASE PLATE TYPE, SEE S-662.

NO.	DATE	REVISIONS	DES.	DRW.	CHK.	DCCO	CDOT
4	7/3/2023	ISSUED FOR BID					
1	11/4/2022	ISSUED FOR PERMIT REVISION 1					
0	9/9/2022	ISSUED FOR PERMIT	MC	MW	BY		

DESIGN BY:
DRAWN BY:
CHECKED BY:
APPROVED BY:
CDOT/APPROVED BY:

TRANSYSTEMS
222 SOUTH RIVERSIDE PLAZA SUITE 610
CHICAGO, ILLINOIS 60606

SKIDMORE, OWINGS & MERRILL LLP
224 SOUTH MICHIGAN AVENUE, SUITE 1000
CHICAGO, ILLINOIS 60604

CHICAGO DEPARTMENT OF TRANSPORTATION
DIVISION OF ENGINEERING

STATE / LAKE LOOP ELEVATED STATION
200 NORTH STATE STREET, CHICAGO, IL 60601

BRIDGE / TOWER PARTIAL PLANS - GROUND LEVEL

CDOT PROJECT D-1-209

DATE: 9/9/2022

SPEC. NO.

DRAWING NO. S-161

REVISION NO. 4

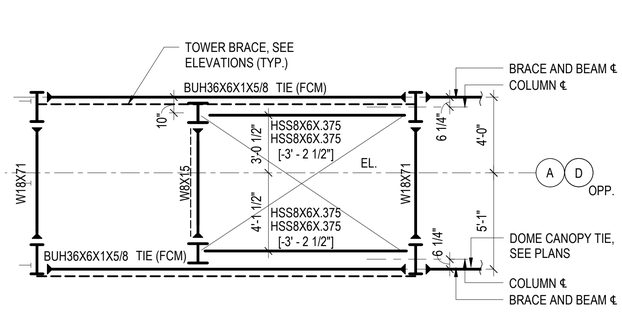

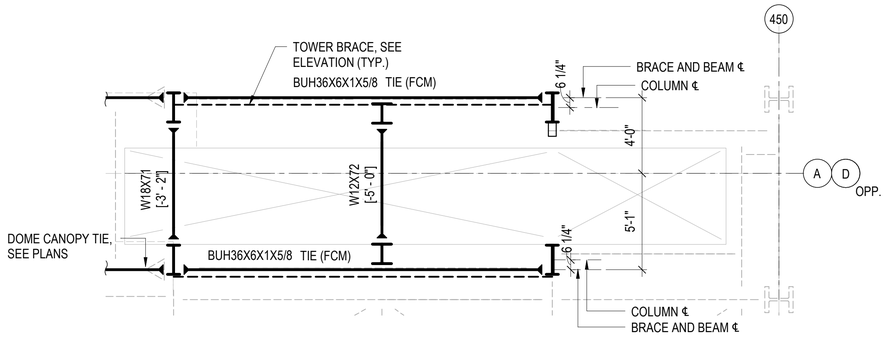

3 WEST ELEVATOR TOWER - PLAN DETAIL

1/4" = 1'-0"

NOTES:
1. NOMINAL TOP OF STEEL ELEVATION = 38'-2 1/2". MATCH ACTUAL TOP OF STEEL TO ADJACENT PLATFORM FRAMING.
2. SEE S-118 FOR SURROUNDING PLATFORM FRAMING.

4 EAST ESCALATOR TOWER - PLAN DETAIL

1/4" = 1'-0"

NOTES:
1. NOMINAL TOP OF STEEL ELEVATION = 38'-2 1/2". MATCH ACTUAL TOP OF STEEL TO ADJACENT PLATFORM FRAMING.
2. SEE S-118 FOR SURROUNDING PLATFORM FRAMING.

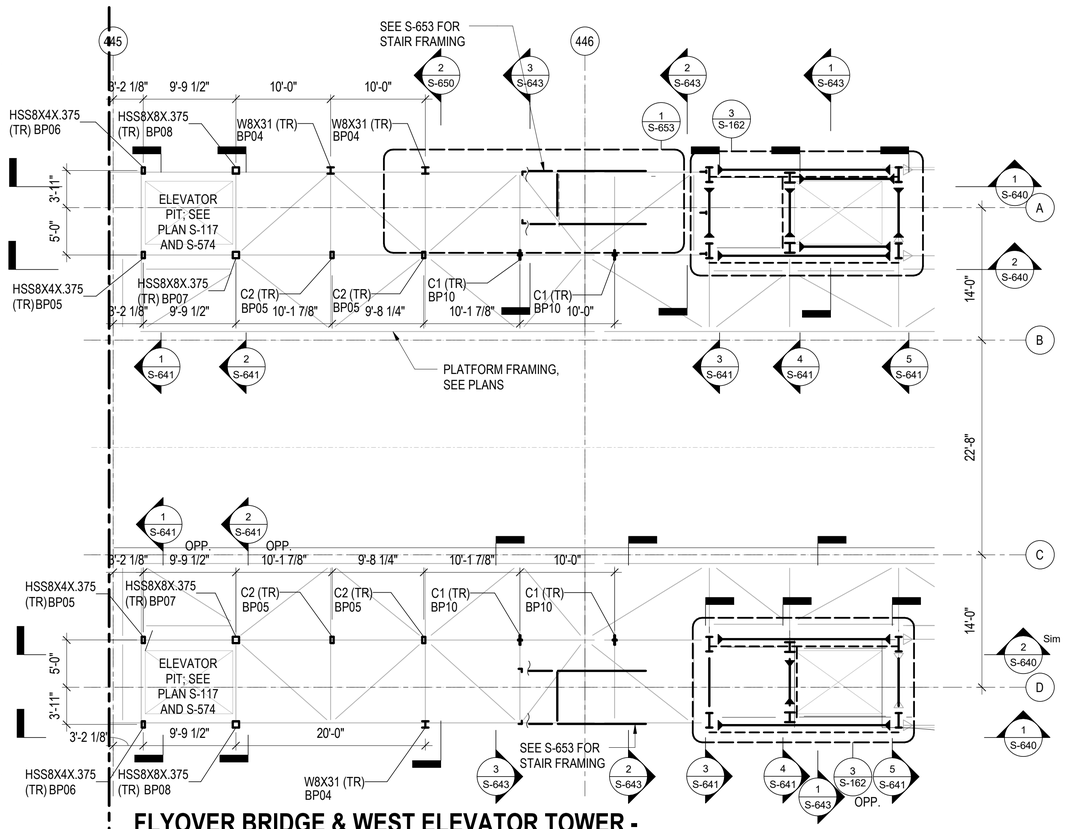

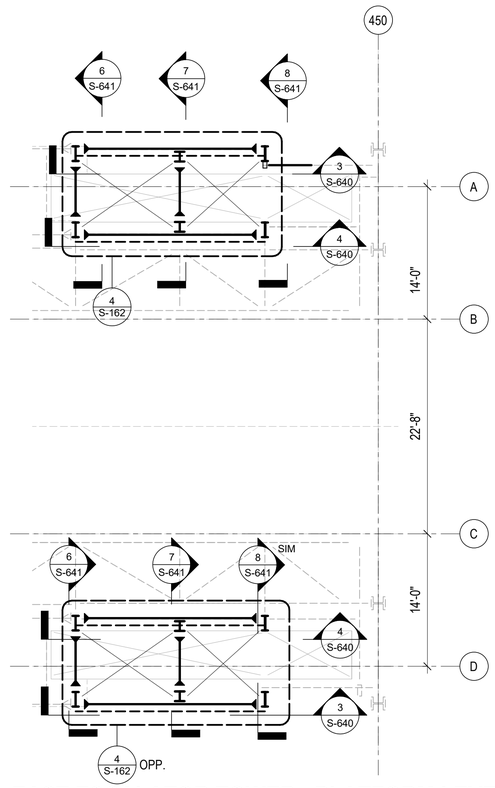

1 FLYOVER BRIDGE & WEST ELEVATOR TOWER - PLATFORM LEVEL PLAN

1/8" = 1'-0"

NOTES:
1. TOP OF SLAB ELEVATION = 38'-7 3/8" U.N.O.
2. TOP OF STEEL ELEVATION = 38'-2 3/8" U.N.O.
3. "CX" INDICATES BUILT-UP STEEL COLUMN, SEE S-662.
4. "BPX" INDICATES BASE PLATE TYPE, SEE S-662.
5. SEE ARCHITECTURAL RIB PROFILE GEOMETRY SHEETS FOR PLATE FRAME GEOMETRY.
6. SEE S-118 FOR SURROUNDING PLATFORM FRAMING.

2 EAST ESCALATOR TOWER - PLATFORM LEVEL PLAN

1/8" = 1'-0"

NOTES:
1. TOP OF SLAB ELEVATION = 38'-7 3/8" U.N.O.
2. TOP OF STEEL ELEVATION = 38'-2 3/8" U.N.O.
3. "CX" INDICATES BUILT-UP STEEL COLUMN, SEE S-662.
4. "BPX" INDICATES BASE PLATE TYPE, SEE S-662.
5. SEE ARCHITECTURAL RIB PROFILE GEOMETRY SHEETS FOR PLATE FRAME GEOMETRY.
6. SEE S-118 FOR SURROUNDING PLATFORM FRAMING.

DESIGN BY:										
DRAWN BY:										
CHECKED BY:		4	7/3/2023	ISSUED FOR BID						
APPROVED BY:		1	11/4/2022	ISSUED FOR PERMIT REVISION 1						
CDOT/APPROVED BY:		0	9/9/2022	ISSUED FOR PERMIT	MC	MW	BY			
		NO.	DATE	REVISIONS	DES.	DRW.	CHK.	DCCO	CDOT	

TRANSYSTEMS
222 SOUTH RIVERSIDE PLAZA SUITE 610
CHICAGO, ILLINOIS 60606

SKIDMORE, OWINGS & MERRILL LLP
224 SOUTH MICHIGAN AVENUE, SUITE 1000
CHICAGO, ILLINOIS 60604

CHICAGO DEPARTMENT OF TRANSPORTATION
DIVISION OF ENGINEERING

STATE / LAKE LOOP ELEVATED STATION
200 NORTH STATE STREET, CHICAGO, IL 60601

BRIDGE / TOWER PARTIAL PLANS - PLATFORM LEVEL

CDOT PROJECT D-1-209 | DATE: 9/9/2022

SPEC. NO.

DRAWING NO. S-162

REVISION NO.4

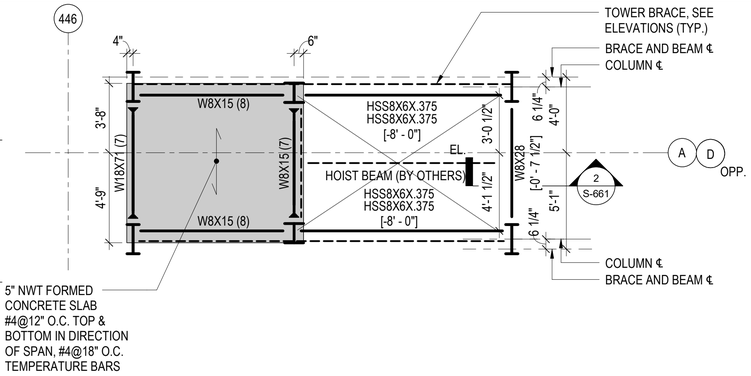

3 WEST ELEVATOR TOWER - PLAN DETAIL

1/4" = 1'-0"

NOTES:
1. TOP OF SLAB ELEVATION = 51'-9" U.N.O.
2. TOP OF STEEL ELEVATION = 51'-4" U.N.O.

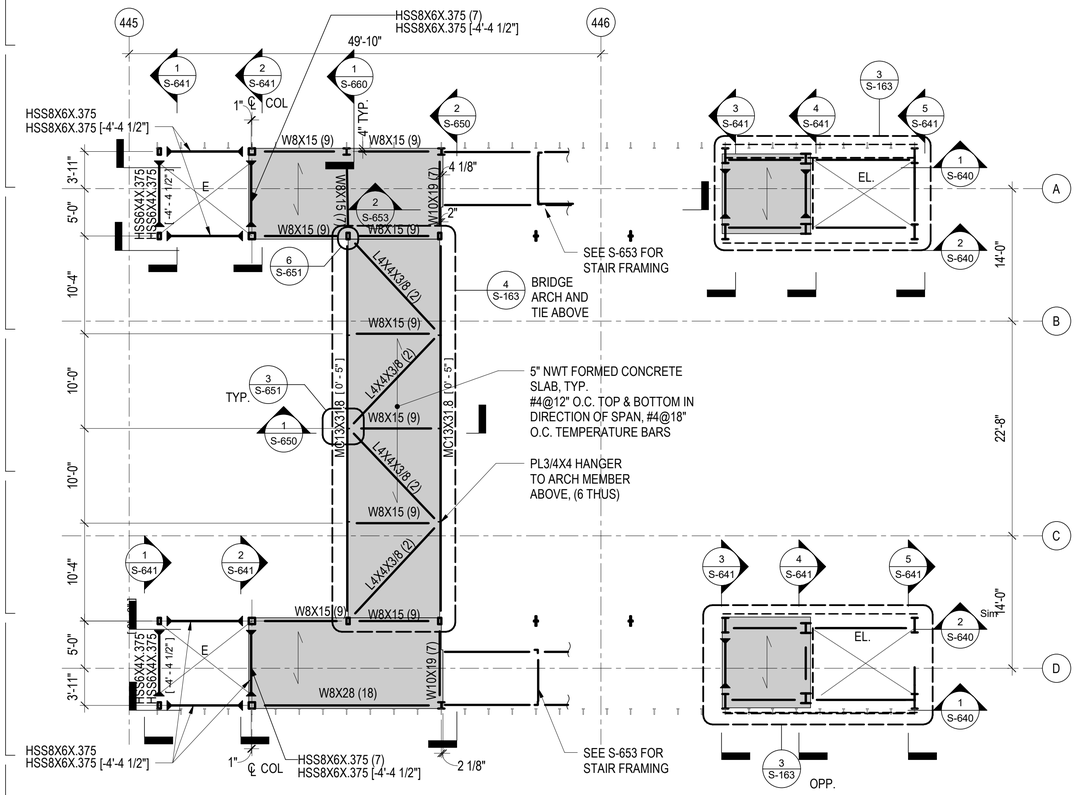

1 FLYOVER BRIDGE & WEST ELEVATOR TOWER - BRIDGE LEVEL

1/8" = 1'-0"

NOTES:
1. TOP OF SLAB ELEVATION = 51'-9" U.N.O.
2. TOP OF STEEL ELEVATION = 51'-4" U.N.O.

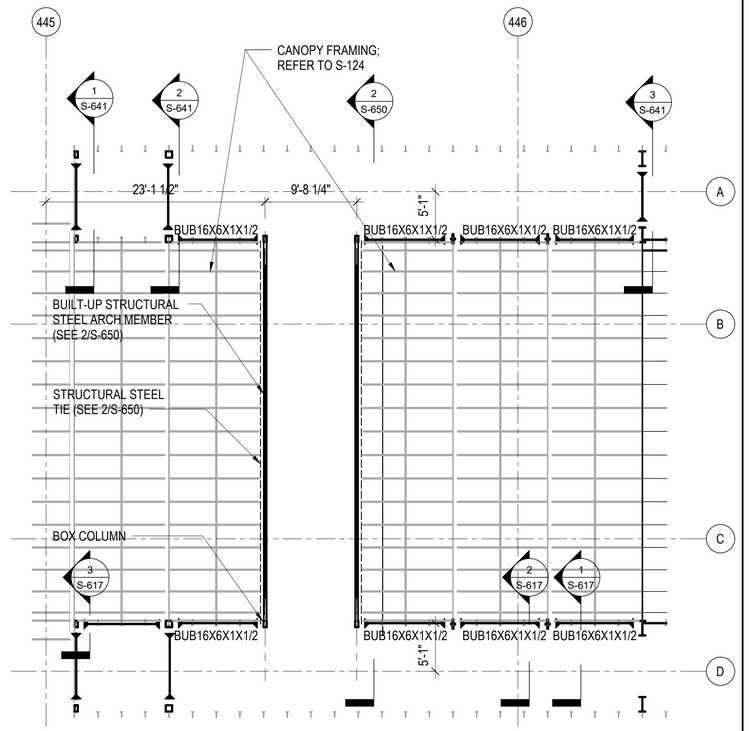

4 FLYOVER BRIDGE - ARCH LEVEL

1/8" = 1'-0"

NOTES:
1. TOP OF STEEL ELEVATION = 55'-10 1/4" U.N.O.

DESIGN BY:										
DRAWN BY:										
CHECKED BY:		4	7/3/2023	ISSUED FOR BID						
APPROVED BY:		1	11/4/2022	ISSUED FOR PERMIT REVISION 1						
CDOT/APPROVED BY:		0	9/9/2022	ISSUED FOR PERMIT	MC	MW	BY			
		NO.	DATE	REVISIONS	DES.	DRW.	CHK.	DCCO	CDOT	

TRANSYSTEMS
222 SOUTH RIVERSIDE PLAZA SUITE 610
CHICAGO, ILLINOIS 60606

SKIDMORE, OWINGS & MERRILL LLP
224 SOUTH MICHIGAN AVENUE, SUITE 1000
CHICAGO, ILLINOIS 60604

CHICAGO DEPARTMENT OF TRANSPORTATION
DIVISION OF ENGINEERING

STATE / LAKE LOOP ELEVATED STATION
200 NORTH STATE STREET, CHICAGO, IL 60601

SPEC. NO.

BRIDGE / TOWER PARTIAL PLANS - BRIDGE LEVEL

DRAWING NO. S-163

CDOT PROJECT D-1-209 | DATE: 9/9/2022 | REVISION NO. 4

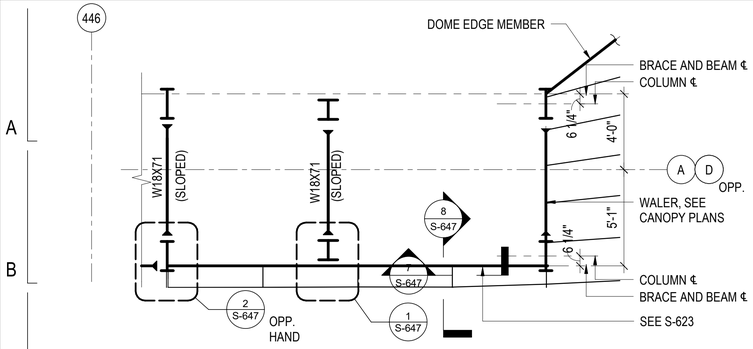

NOTES:
1. TOP OF STEEL ELEVATION = 58' - 1 1/4"
2. ELEVATION IS APPROXIMATE - ALL MEMBERS SHOWN ARE SLOPED

3 WEST ELEVATOR TOWER - PLAN DETAIL
1/4" = 1'-0"

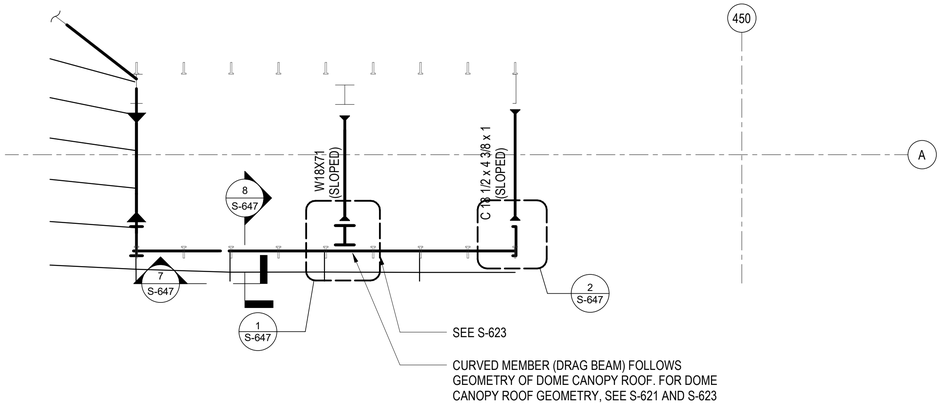

4 EAST ESCALATOR TOWER - PLAN DETAIL
1/4" = 1'-0"

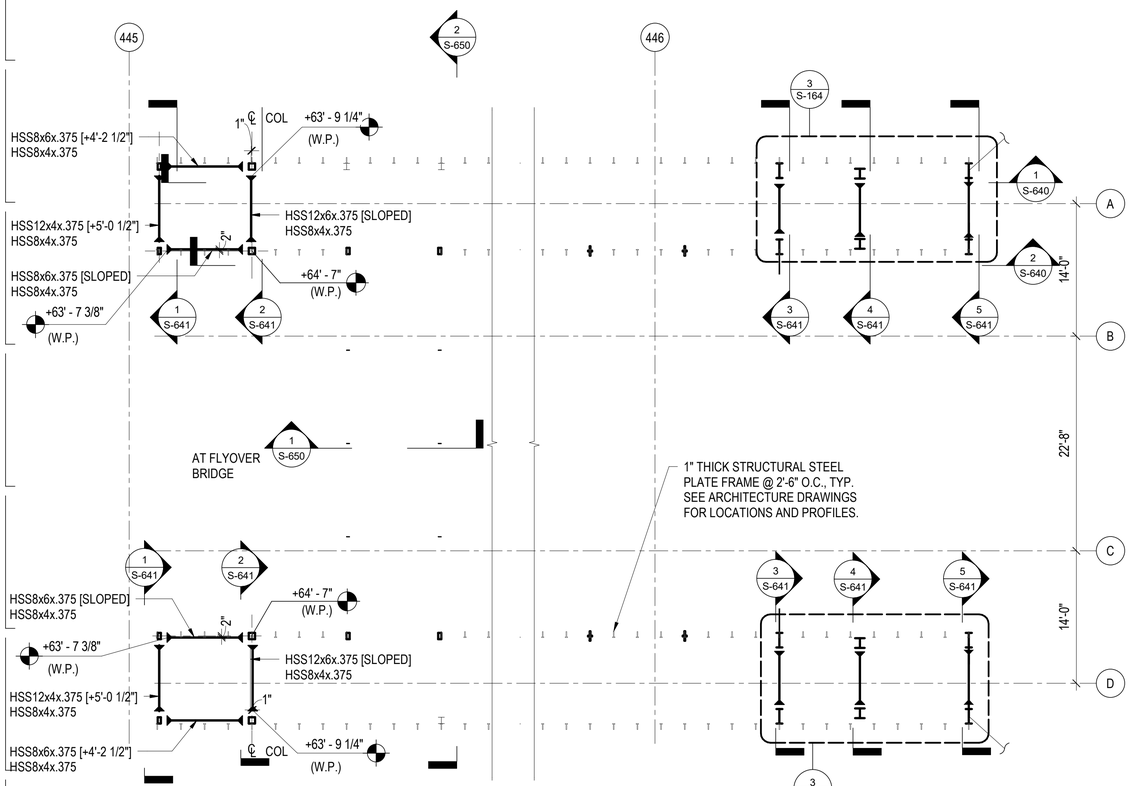

NOTES:
1. TOP OF STEEL ELEVATION = 59' - 7 1/2" U.N.O.

1 FLYOVER BRIDGE
1/8" = 1'-0"

NOTES:
1. TOP OF STEEL ELEVATION = 58' - 1 1/4"
2. ELEVATION IS APPROXIMATE - ALL MEMBERS SHOWN ARE SLOPED

1A WEST ELEVATOR - SUB ROOF
1/8" = 1'-0"

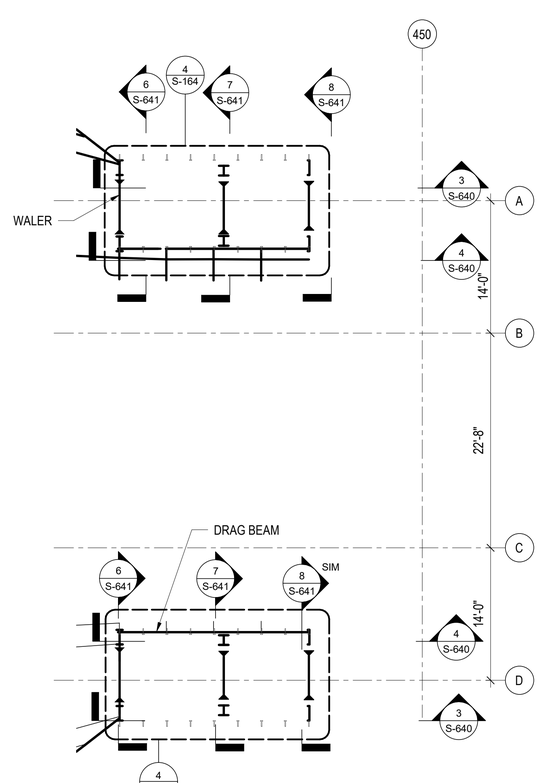

NOTES:
1. TOP OF STEEL ELEVATION = 58' - 1 1/4"
2. ELEVATION IS APPROXIMATE - ALL MEMBERS SHOWN ARE SLOPED

2 EAST ESCALATOR TOWER - SUB-ROOF
1/8" = 1'-0"

NO.	DATE	REVISIONS	DES.	DRW.	CHK.	DCCO	CDOT
4	7/3/2023	ISSUED FOR BID					
2	1/13/2023	ISSUED FOR PERMIT REVISION 2					
1	11/4/2022	ISSUED FOR PERMIT REVISION 1					
0	9/9/2022	ISSUED FOR PERMIT	MC	MW	BY		

DESIGN BY:
DRAWN BY:
CHECKED BY:
APPROVED BY:
CDOT/APPROVED BY:

TRANSYSTEMS
222 SOUTH RIVERSIDE PLAZA SUITE 610
CHICAGO, ILLINOIS 60606

SKIDMORE, OWINGS & MERRILL LLP
224 SOUTH MICHIGAN AVENUE, SUITE 1000
CHICAGO, ILLINOIS 60604

CHICAGO DEPARTMENT OF TRANSPORTATION
DIVISION OF ENGINEERING

STATE / LAKE LOOP ELEVATED STATION
200 NORTH STATE STREET, CHICAGO, IL 60601

SPEC. NO.

BRIDGE / TOWER PARTIAL PLANS - LOWER ROOF LEVEL

DRAWING NO. S-164

CDOT PROJECT D-1-209

DATE: 9/9/2022

REVISION NO.4

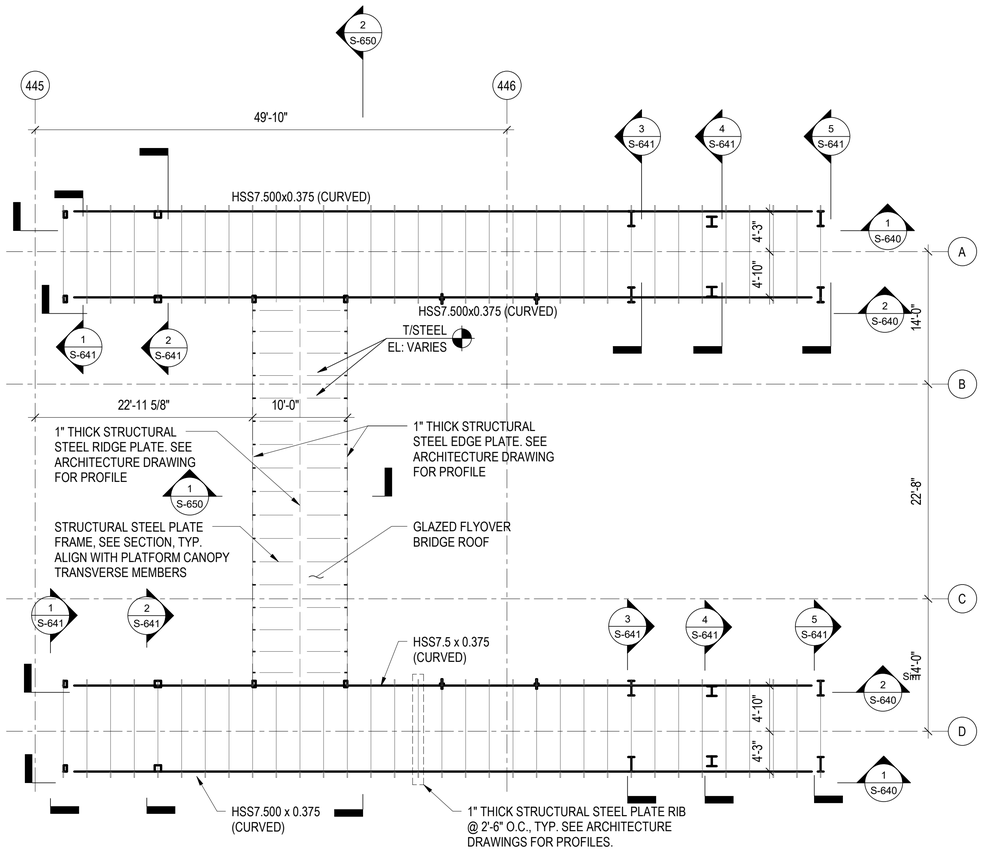

1 FLYOVER BRIDGE & WEST ELEVATOR TOWER - ROOF LEVEL

1/8" = 1'-0"

NOTES:
1. T/STEEL ELEV. SEE ELEVATIONS
2. SEE INDICATED SHEETS FOR ELEVATIONS

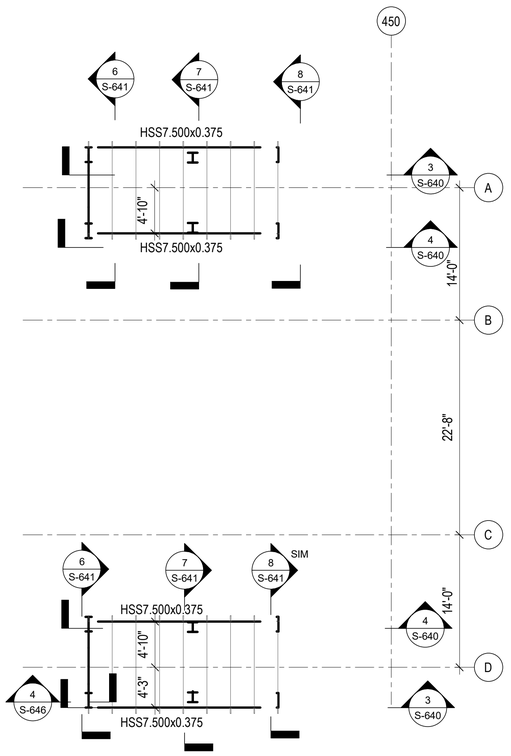

2 EAST ESCALATOR TOWER - ROOF LEVEL

1/8" = 1'-0"

NOTES:
1. T/STEEL ELEV. SEE ELEVATIONS
2. SEE INDICATED SHEETS FOR ELEVATIONS

1 2 3 4 5 6 7 8 9 10 11 12 13 14 15 16 17 18 19 20

DESIGN BY:										
DRAWN BY:										
CHECKED BY:		4	7/3/2023	ISSUED FOR BID						
APPROVED BY:		2	1/13/2023	ISSUED FOR PERMIT REVISION 2						
CDOT/APPROVED BY:		0	9/9/2022	ISSUED FOR PERMIT	MC	MW	BY			
		NO.	DATE	REVISIONS	DES.	DRW.	CHK.	DCCO	CDOT	

TranSystems
TRANSYSTEMS
222 SOUTH RIVERSIDE PLAZA SUITE 610
CHICAGO, ILLINOIS 60606

SOM
SKIDMORE, OWINGS & MERRILL LLP
224 SOUTH MICHIGAN AVENUE, SUITE 1000
CHICAGO, ILLINOIS 60604

CDOT
CHICAGO DEPARTMENT OF TRANSPORTATION
DIVISION OF ENGINEERING

STATE / LAKE LOOP ELEVATED STATION
200 NORTH STATE STREET, CHICAGO, IL 60601

BRIDGE / TOWER PARTIAL PLANS - ROOF LEVEL

SPEC. NO.

DRAWING NO. S-165

CDOT PROJECT D-1-209 | DATE: 9/9/2022 | REVISION NO.4

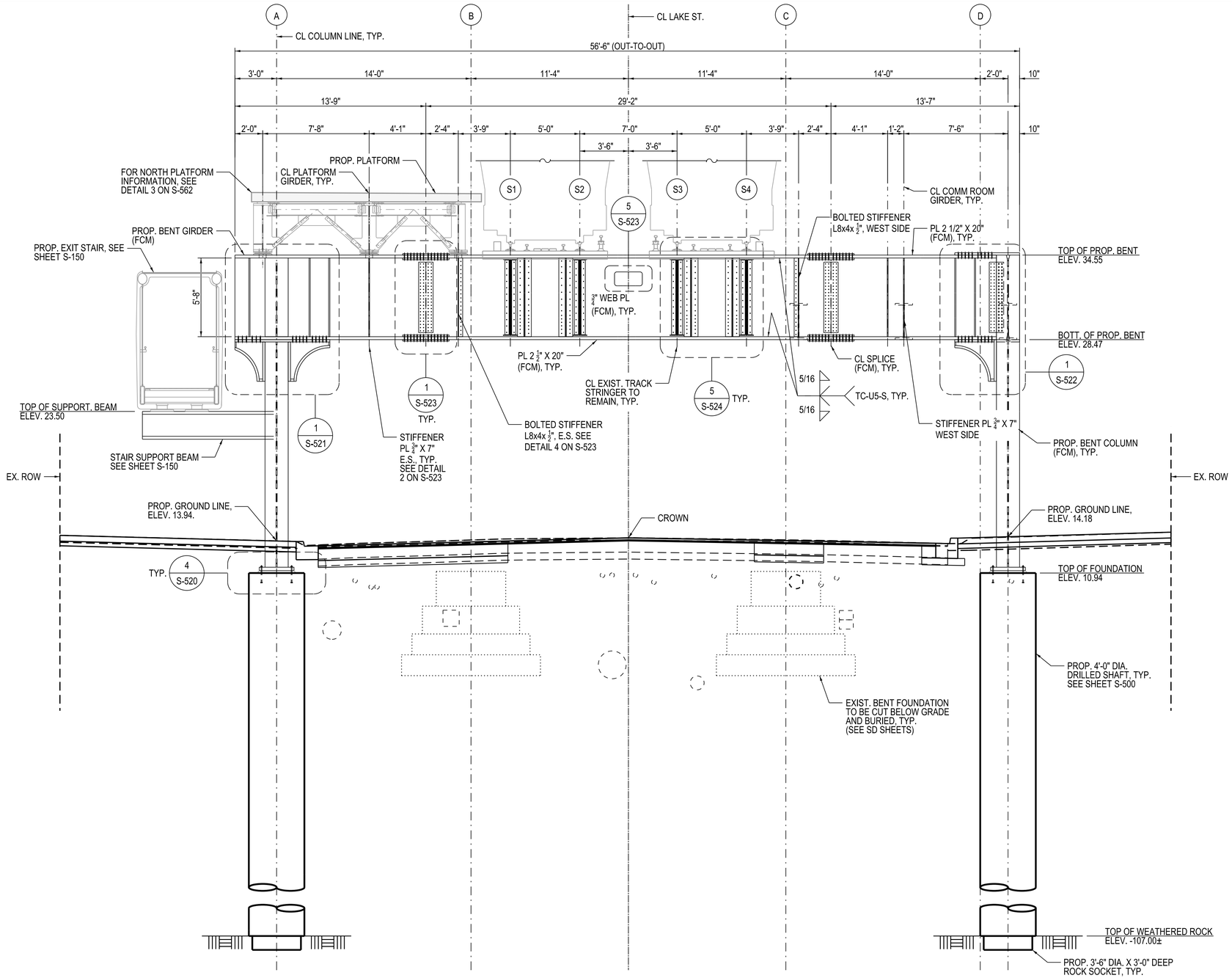

1 ELEVATION VIEW - BENT 442 (STA. 14+94.54)

1/4" = 1'-0" (LOOKING EAST)

DESIGN BY:	CMG								
DRAWN BY:	CMG								
CHECKED BY:	WJC								
APPROVED BY:	WJC	4	7/3/2023	ISSUED FOR BID					
CDOT/APPROVED BY:		NO.	DATE	REVISIONS	DES.	DRW.	CHK.	DCCO	CDOT

TRANSYSTEMS
222 SOUTH RIVERSIDE PLAZA SUITE 610
CHICAGO, ILLINOIS 60606

SKIDMORE, OWINGS & MERRILL LLP
224 SOUTH MICHIGAN AVENUE, SUITE 1000
CHICAGO, ILLINOIS 60604

CHICAGO DEPARTMENT OF TRANSPORTATION
DIVISION OF ENGINEERING

STATE / LAKE LOOP ELEVATED STATION
200 NORTH STATE STREET, CHICAGO, IL 60601

BENT 442 ELEVATION

CDOT PROJECT D-1-209

DATE: 7/3/2023

SPEC. NO.

DRAWING NO. S-300

REVISION NO.

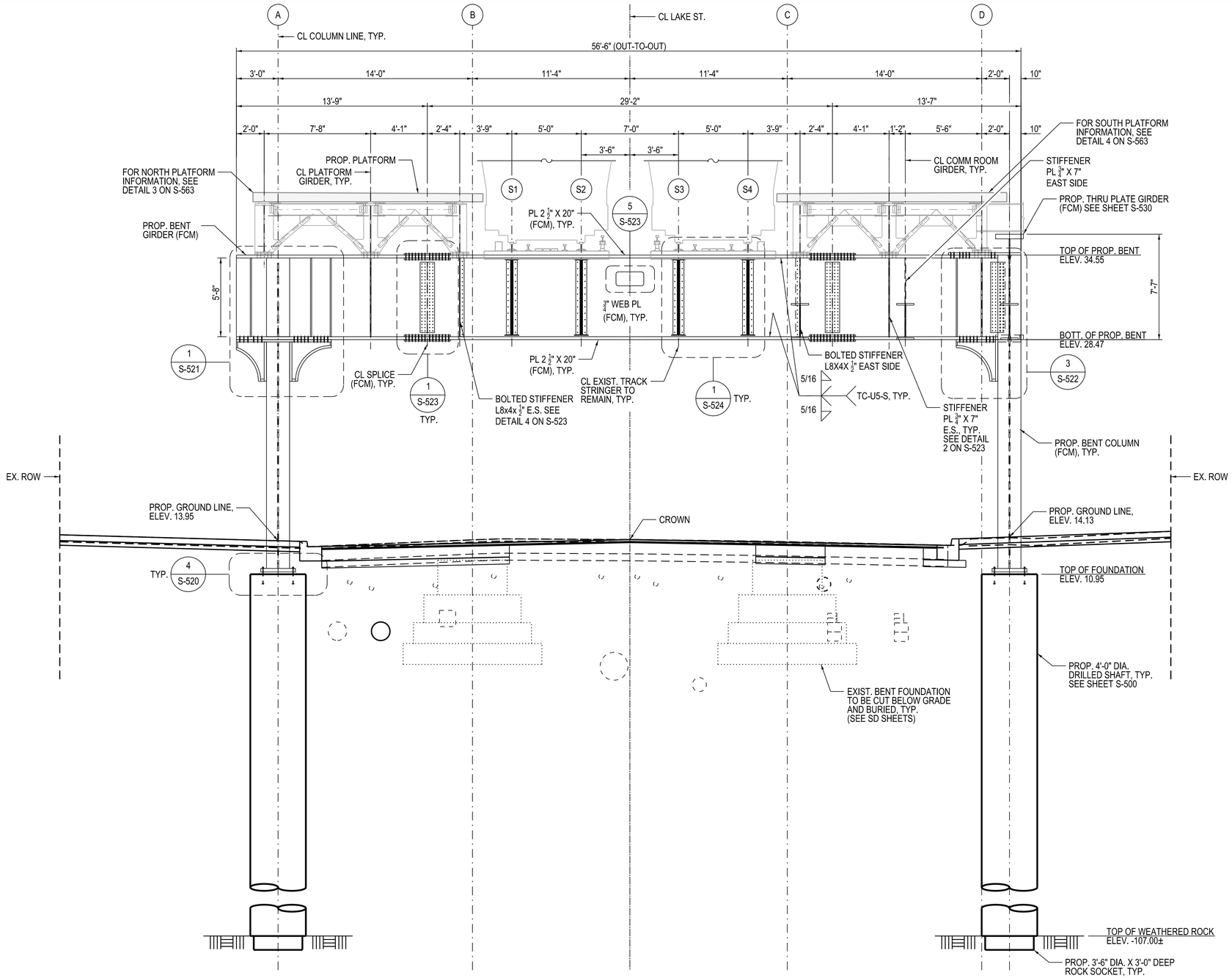

1 ELEVATION VIEW - BENT 443 (STA. 15+46.29)

1/4" = 1'-0" (LOOKING EAST)

DESIGN BY:	CMG								
DRAWN BY:	CMG								
CHECKED BY:	WJC								
APPROVED BY:	WJC	4	7/3/2023	ISSUED FOR BID					
CDOT/APPROVED BY:		NO.	DATE	REVISIONS	DES.	DRW.	CHK.	DCCO	CDOT

TRANSYSTEMS
222 SOUTH RIVERSIDE PLAZA SUITE 610
CHICAGO, ILLINOIS 60606

SKIDMORE, OWINGS & MERRILL LLP
224 SOUTH MICHIGAN AVENUE, SUITE 1000
CHICAGO, ILLINOIS 60604

CHICAGO DEPARTMENT OF TRANSPORTATION
DIVISION OF ENGINEERING

STATE / LAKE LOOP ELEVATED STATION
200 NORTH STATE STREET, CHICAGO, IL 60601

BENT 443 ELEVATION

CDOT PROJECT D-1-209 | DATE: 7/3/2023

SPEC. NO.

DRAWING NO. S-301

REVISION NO.

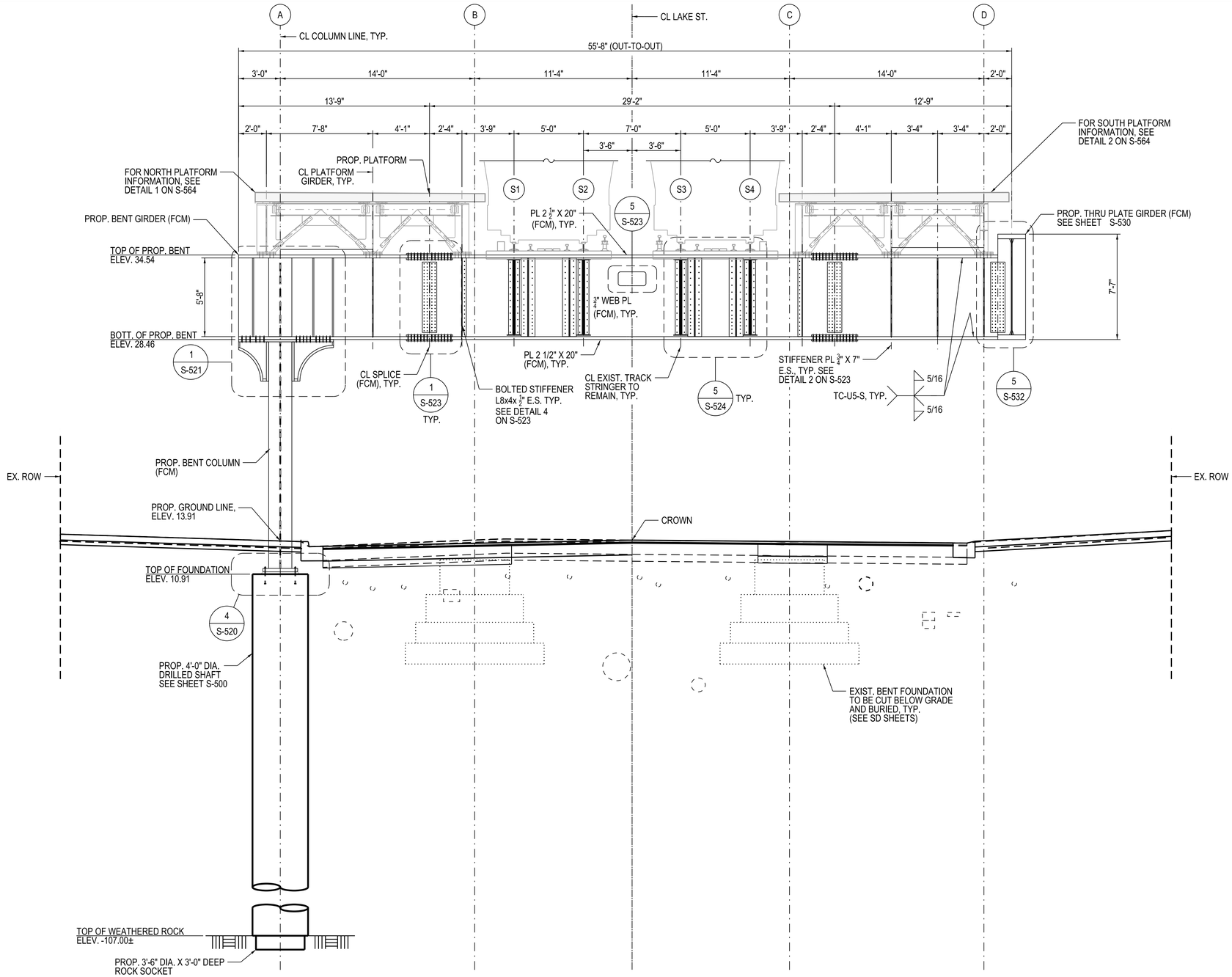

1 ELEVATION VIEW - BENT 444 (STA. 15+98.04)

1/4" = 1'-0" (LOOKING EAST)

DESIGN BY:	CMG								
DRAWN BY:	CMG								
CHECKED BY:	WJC								
APPROVED BY:	WJC	4	7/3/2023	ISSUED FOR BID					
CDOT/APPROVED BY:		NO.	DATE	REVISIONS	DES.	DRW.	CHK.	DCCO	CDOT

TRANSYSTEMS
222 SOUTH RIVERSIDE PLAZA SUITE 610
CHICAGO, ILLINOIS 60606

SKIDMORE, OWINGS & MERRILL LLP
224 SOUTH MICHIGAN AVENUE, SUITE 1000
CHICAGO, ILLINOIS 60604

CHICAGO DEPARTMENT OF TRANSPORTATION
DIVISION OF ENGINEERING

STATE / LAKE LOOP ELEVATED STATION
200 NORTH STATE STREET, CHICAGO, IL 60601

BENT 444 ELEVATION

CDOT PROJECT D-1-209

DATE: 7/3/2023

SPEC. NO.

DRAWING NO. S-302

REVISION NO.

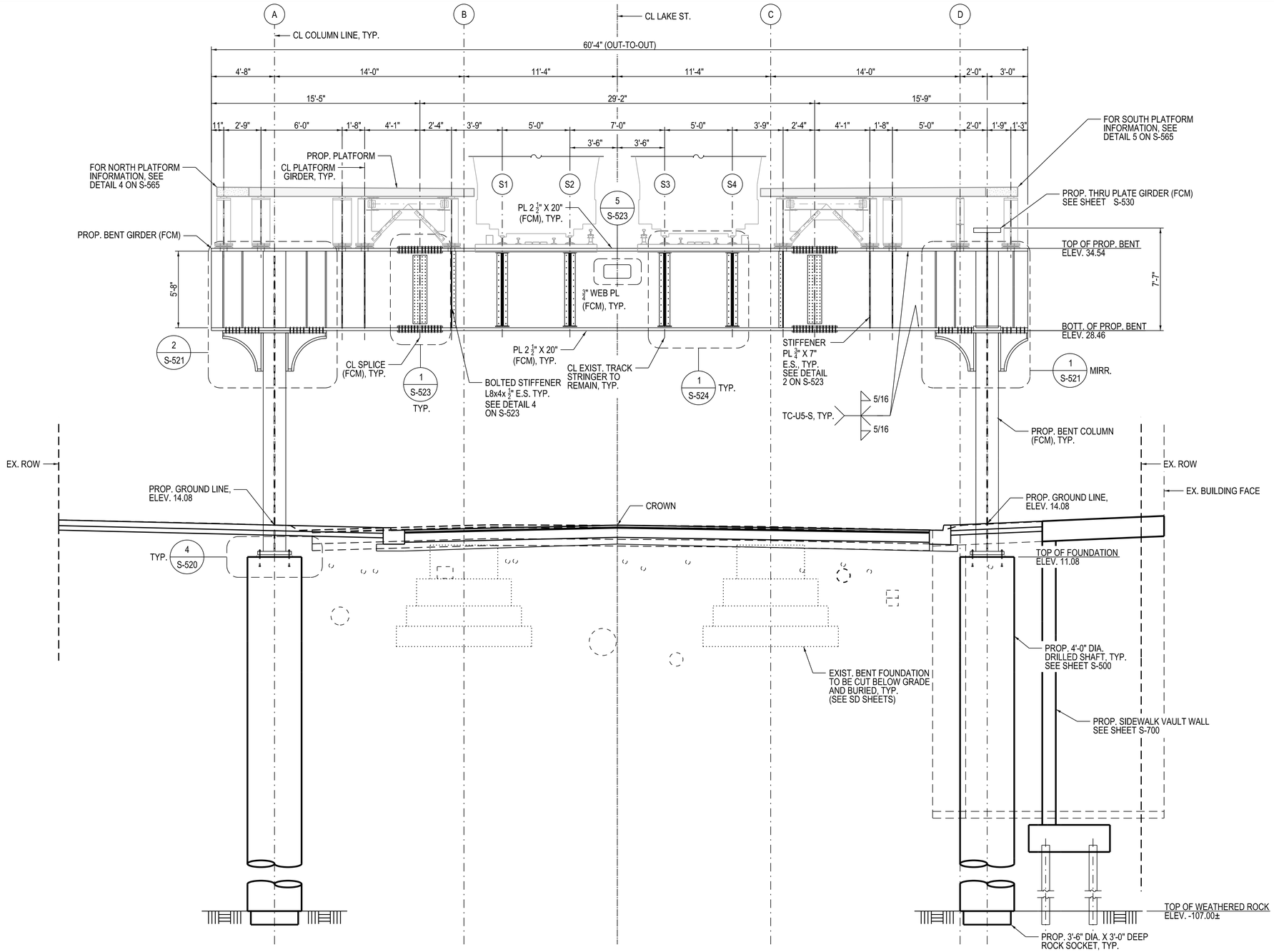

1 ELEVATION VIEW - BENT 445 (STA. 16+49.79)

1/4" = 1'-0" (LOOKING EAST)

DESIGN BY:	CMG									
DRAWN BY:	CMG									
CHECKED BY:	WJC									
APPROVED BY:	WJC	4	7/3/2023	ISSUED FOR BID						
CDOT/APPROVED BY:		NO.	DATE	REVISIONS	DES.	DRW.	CHK.	DCCO	CDOT	

TRANSYSTEMS
222 SOUTH RIVERSIDE PLAZA SUITE 610
CHICAGO, ILLINOIS 60606

SKIDMORE, OWINGS & MERRILL LLP
224 SOUTH MICHIGAN AVENUE, SUITE 1000
CHICAGO, ILLINOIS 60604

CHICAGO DEPARTMENT OF TRANSPORTATION
DIVISION OF ENGINEERING

STATE / LAKE LOOP ELEVATED STATION
200 NORTH STATE STREET, CHICAGO, IL 60601

SPEC. NO.

BENT 445 ELEVATION

DRAWING NO. S-303

CDOT PROJECT D-1-209

DATE: 7/3/2023

REVISION NO.

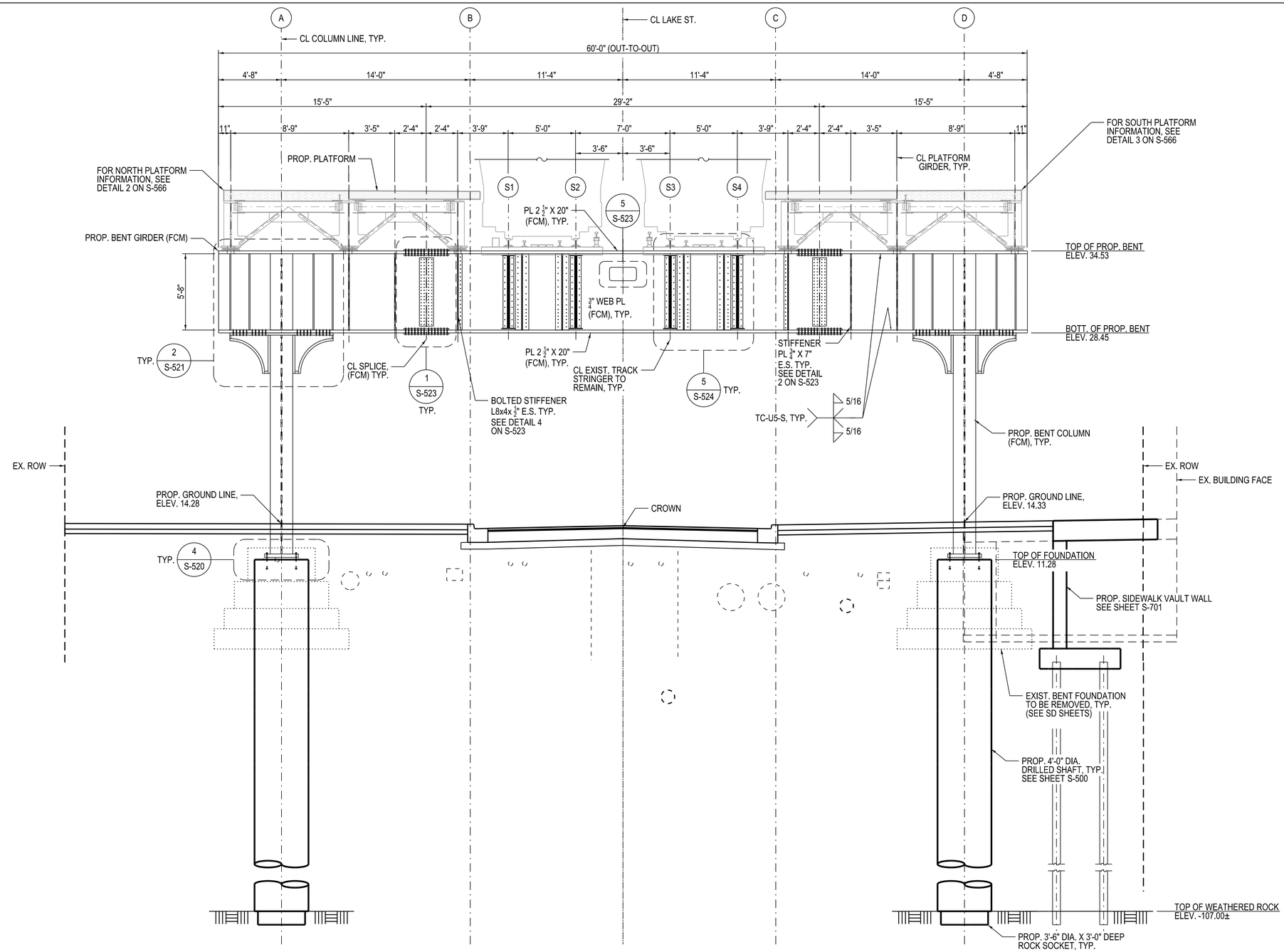

1 ELEVATION VIEW - BENT 446 (STA. 16+99.62)

1/4" = 1'-0" (LOOKING EAST)

DESIGN BY:	CMG								
DRAWN BY:	CMG								
CHECKED BY:	WJC								
APPROVED BY:	WJC	4	7/3/2023	ISSUED FOR BID					
CDOT/APPROVED BY:		NO.	DATE	REVISIONS	DES.	DRW.	CHK.	DCCO	CDOT

TranSystems
TRANSYSTEMS
222 SOUTH RIVERSIDE PLAZA SUITE 610
CHICAGO, ILLINOIS 60606

SOM
SKIDMORE, OWINGS & MERRILL LLP
224 SOUTH MICHIGAN AVENUE, SUITE 1000
CHICAGO, ILLINOIS 60604

CDOT
CHICAGO DEPARTMENT OF TRANSPORTATION
DIVISION OF ENGINEERING

STATE / LAKE LOOP ELEVATED STATION
200 NORTH STATE STREET, CHICAGO, IL 60601

BENT 446 ELEVATION

CDOT PROJECT D-1-209

DATE: 7/3/2023

SPEC. NO.

DRAWING NO. S-304

REVISION NO.

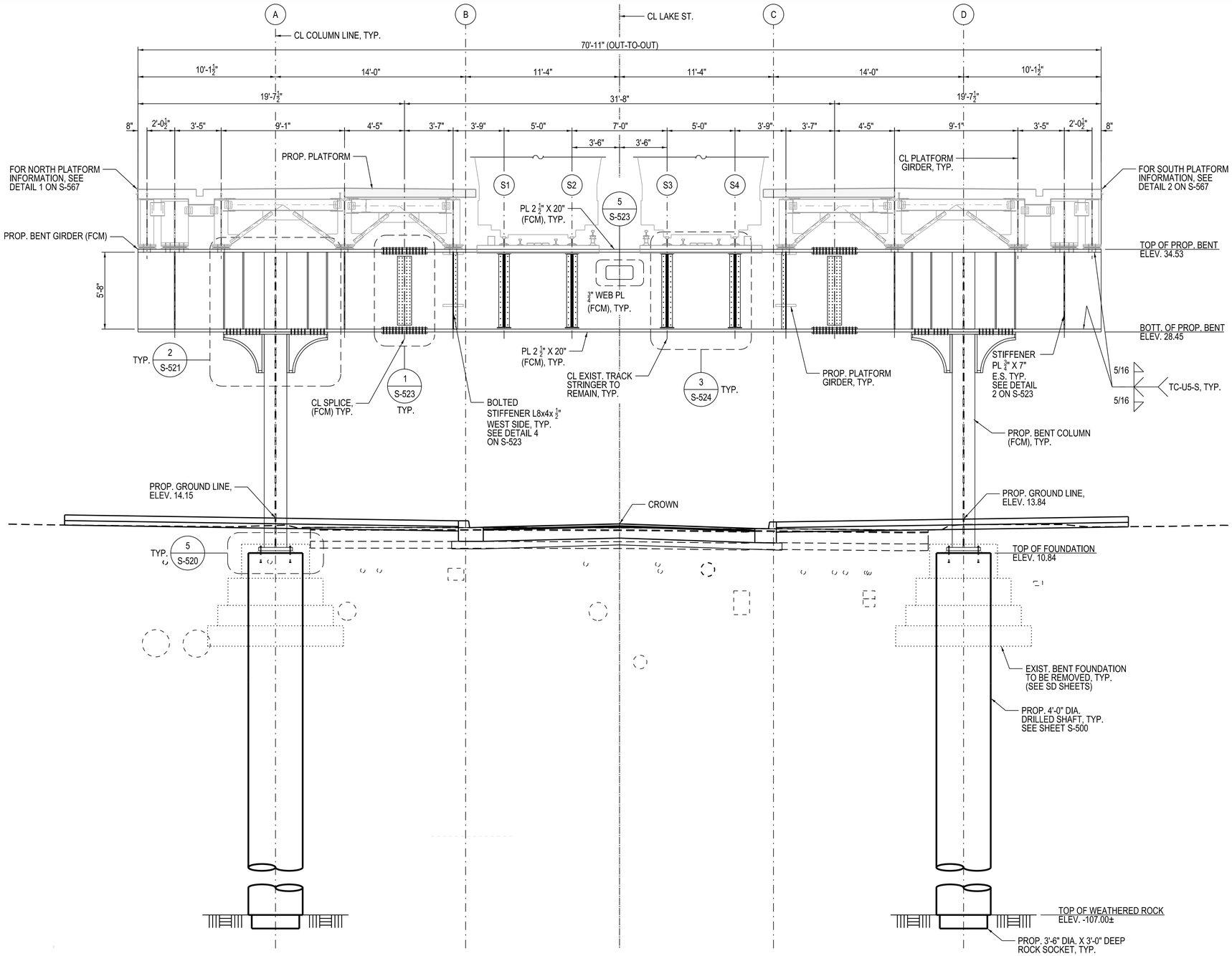

1 ELEVATION VIEW - BENT 447 (STA. 17+53.29)

1/4" = 1'-0" (LOOKING EAST)

DESIGN BY:	CMG								
DRAWN BY:	CMG								
CHECKED BY:	WJC								
APPROVED BY:	WJC	4	7/3/2023	ISSUED FOR BID					
CDOT/APPROVED BY:		NO.	DATE	REVISIONS	DES.	DRW.	CHK.	DCCO	CDOT

TRANSYSTEMS
222 SOUTH RIVERSIDE PLAZA SUITE 610
CHICAGO, ILLINOIS 60606

SKIDMORE, OWINGS & MERRILL LLP
224 SOUTH MICHIGAN AVENUE, SUITE 1000
CHICAGO, ILLINOIS 60604

CHICAGO DEPARTMENT OF TRANSPORTATION
DIVISION OF ENGINEERING

STATE / LAKE LOOP ELEVATED STATION
200 NORTH STATE STREET, CHICAGO, IL 60601

BENT 447 ELEVATION

CDOT PROJECT D-1-209

DATE: 7/3/2023

SPEC. NO.

DRAWING NO. S-305

REVISION NO.

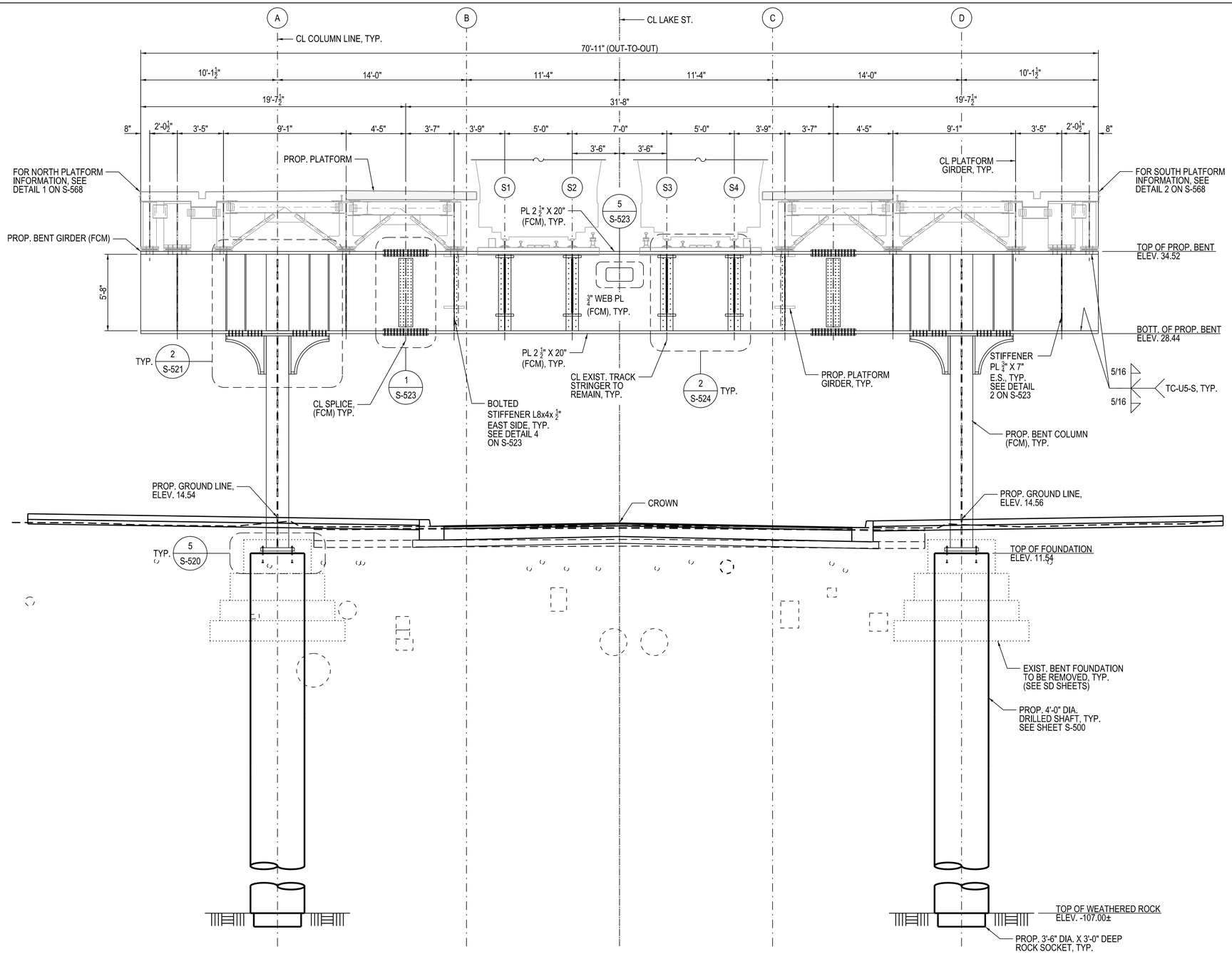

1 ELEVATION VIEW - BENT 449 (STA. 18+30.29)

1/4" = 1'-0" (LOOKING EAST)

DESIGN BY:	CMG								
DRAWN BY:	CMG								
CHECKED BY:	WJC								
APPROVED BY:	WJC	4	7/3/2023	ISSUED FOR BID					
CDOT/APPROVED BY:		NO.	DATE	REVISIONS	DES.	DRW.	CHK.	DCCO	CDOT

TRANSYSTEMS
222 SOUTH RIVERSIDE PLAZA SUITE 610
CHICAGO, ILLINOIS 60606

SKIDMORE, OWINGS & MERRILL LLP
224 SOUTH MICHIGAN AVENUE, SUITE 1000
CHICAGO, ILLINOIS 60604

CHICAGO DEPARTMENT OF TRANSPORTATION
DIVISION OF ENGINEERING

STATE / LAKE LOOP ELEVATED STATION
200 NORTH STATE STREET, CHICAGO, IL 60601

BENT 449 ELEVATION

CDOT PROJECT D-1-209

DATE: 7/3/2023

SPEC. NO.

DRAWING NO. S-306

REVISION NO.

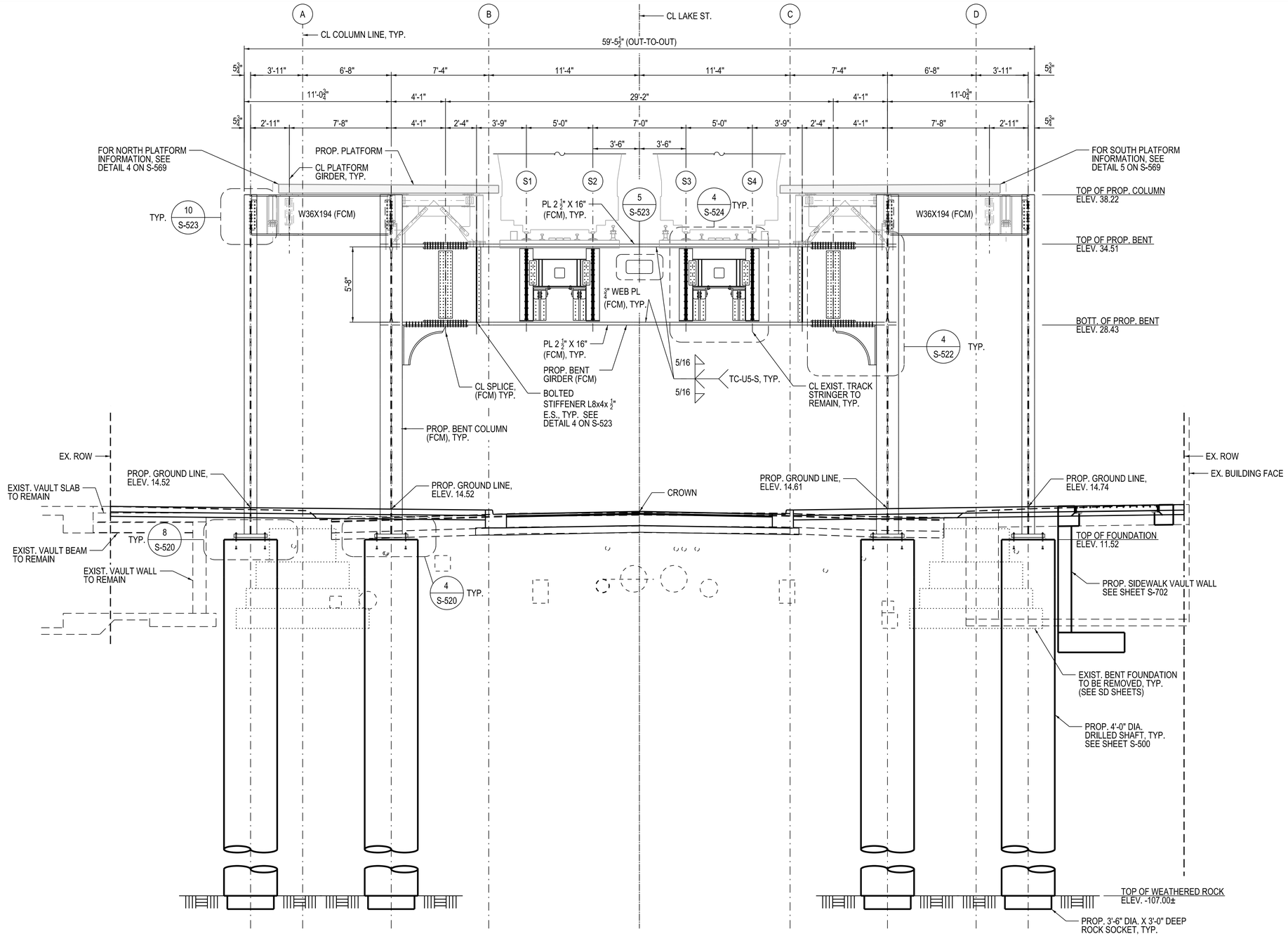

1 ELEVATION VIEW - BENT 450 (STA. 18+82.79)

1/4" = 1'-0" (LOOKING EAST)

DESIGN BY:	CMG								
DRAWN BY:	CMG								
CHECKED BY:	WJC								
APPROVED BY:	WJC	4	7/3/2023	ISSUED FOR BID					
CDOT/APPROVED BY:		NO.	DATE	REVISIONS	DES.	DRW.	CHK.	DCCO	CDOT

TranSystems
TRANSYSTEMS
222 SOUTH RIVERSIDE PLAZA SUITE 610
CHICAGO, ILLINOIS 60606

SOM
SKIDMORE, OWINGS & MERRILL LLP
224 SOUTH MICHIGAN AVENUE, SUITE 1000
CHICAGO, ILLINOIS 60604

CDOT
CHICAGO DEPARTMENT OF TRANSPORTATION
DIVISION OF ENGINEERING

STATE / LAKE LOOP ELEVATED STATION
200 NORTH STATE STREET, CHICAGO, IL 60601

BENT 450 ELEVATION

CDOT PROJECT D-1-209

DATE: 7/3/2023

SPEC. NO.

DRAWING NO. S-307

REVISION NO.

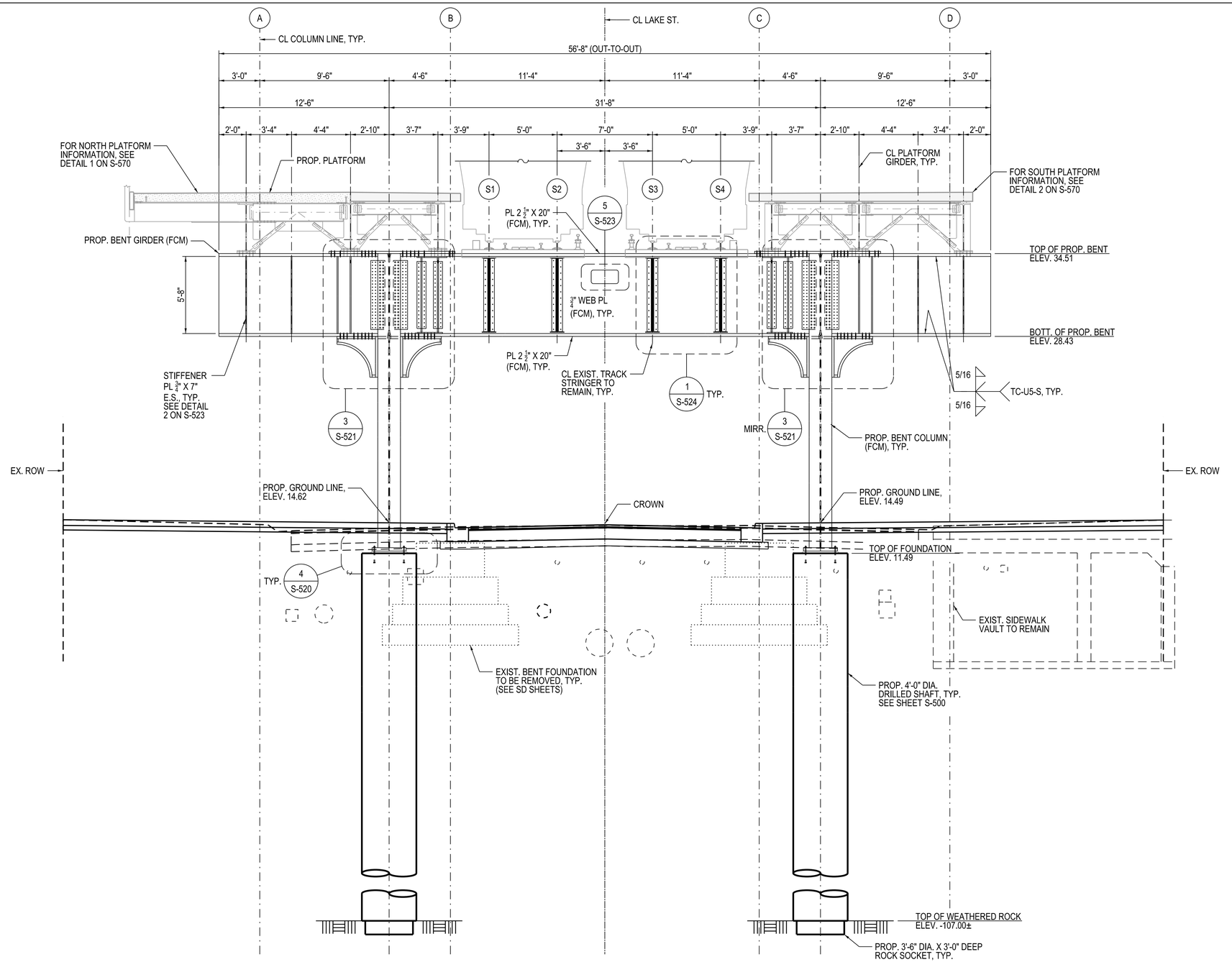

1 ELEVATION VIEW - BENT 451 (STA. 19+26.54)

1/4" = 1'-0" (LOOKING EAST)

DESIGN BY:	CMG								
DRAWN BY:	CMG								
CHECKED BY:	WJC								
APPROVED BY:	WJC	4	7/3/2023	ISSUED FOR BID					
CDOT/APPROVED BY:		NO.	DATE	REVISIONS	DES.	DRW.	CHK.	DCCO	CDOT

TRANSYSTEMS
222 SOUTH RIVERSIDE PLAZA SUITE 610
CHICAGO, ILLINOIS 60606

SKIDMORE, OWINGS & MERRILL LLP
224 SOUTH MICHIGAN AVENUE, SUITE 1000
CHICAGO, ILLINOIS 60604

CHICAGO DEPARTMENT OF TRANSPORTATION
DIVISION OF ENGINEERING

STATE / LAKE LOOP ELEVATED STATION
200 NORTH STATE STREET, CHICAGO, IL 60601

BENT 451 ELEVATION

CDOT PROJECT D-1-209

DATE: 7/3/2023

SPEC. NO.

DRAWING NO. S-308

REVISION NO.

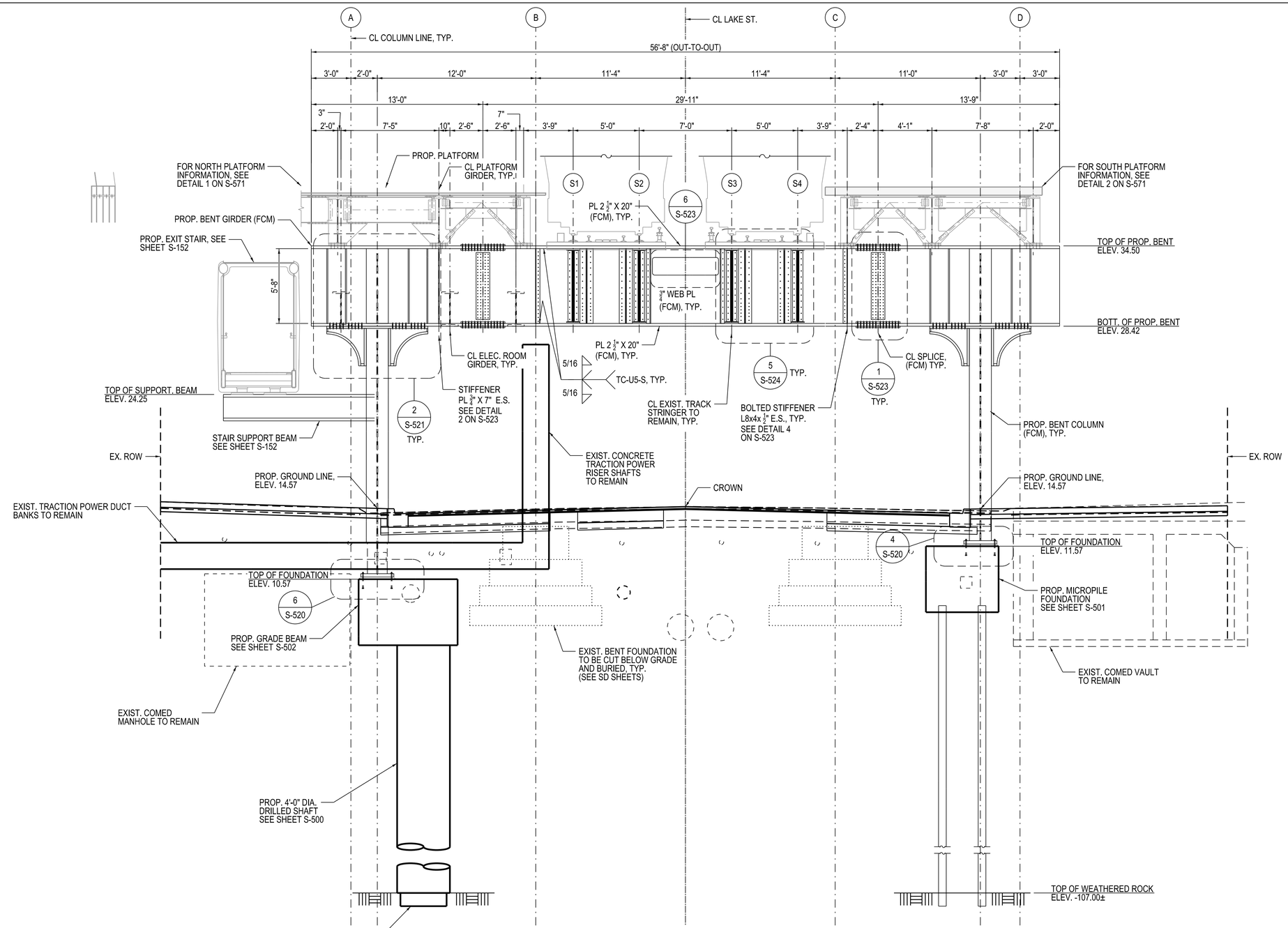

1 ELEVATION VIEW - BENT 452 (STA. 19+74.71)

1/4" = 1'-0" (LOOKING EAST)

DESIGN BY:	CMG									
DRAWN BY:	CMG									
CHECKED BY:	WJC									
APPROVED BY:	WJC	4	7/3/2023	ISSUED FOR BID						
CDOT/APPROVED BY:		NO.	DATE	REVISIONS	DES.	DRW.	CHK.	DCCO	CDOT	

TRANSYSTEMS
222 SOUTH RIVERSIDE PLAZA SUITE 610
CHICAGO, ILLINOIS 60606

SKIDMORE, OWINGS & MERRILL LLP
224 SOUTH MICHIGAN AVENUE, SUITE 1000
CHICAGO, ILLINOIS 60604

CHICAGO DEPARTMENT OF TRANSPORTATION
DIVISION OF ENGINEERING

STATE / LAKE LOOP ELEVATED STATION
200 NORTH STATE STREET, CHICAGO, IL 60601

BENT 452 ELEVATION

CDOT PROJECT D-1-209

DATE: 7/3/2023

SPEC. NO.

DRAWING NO. S-309

REVISION NO.

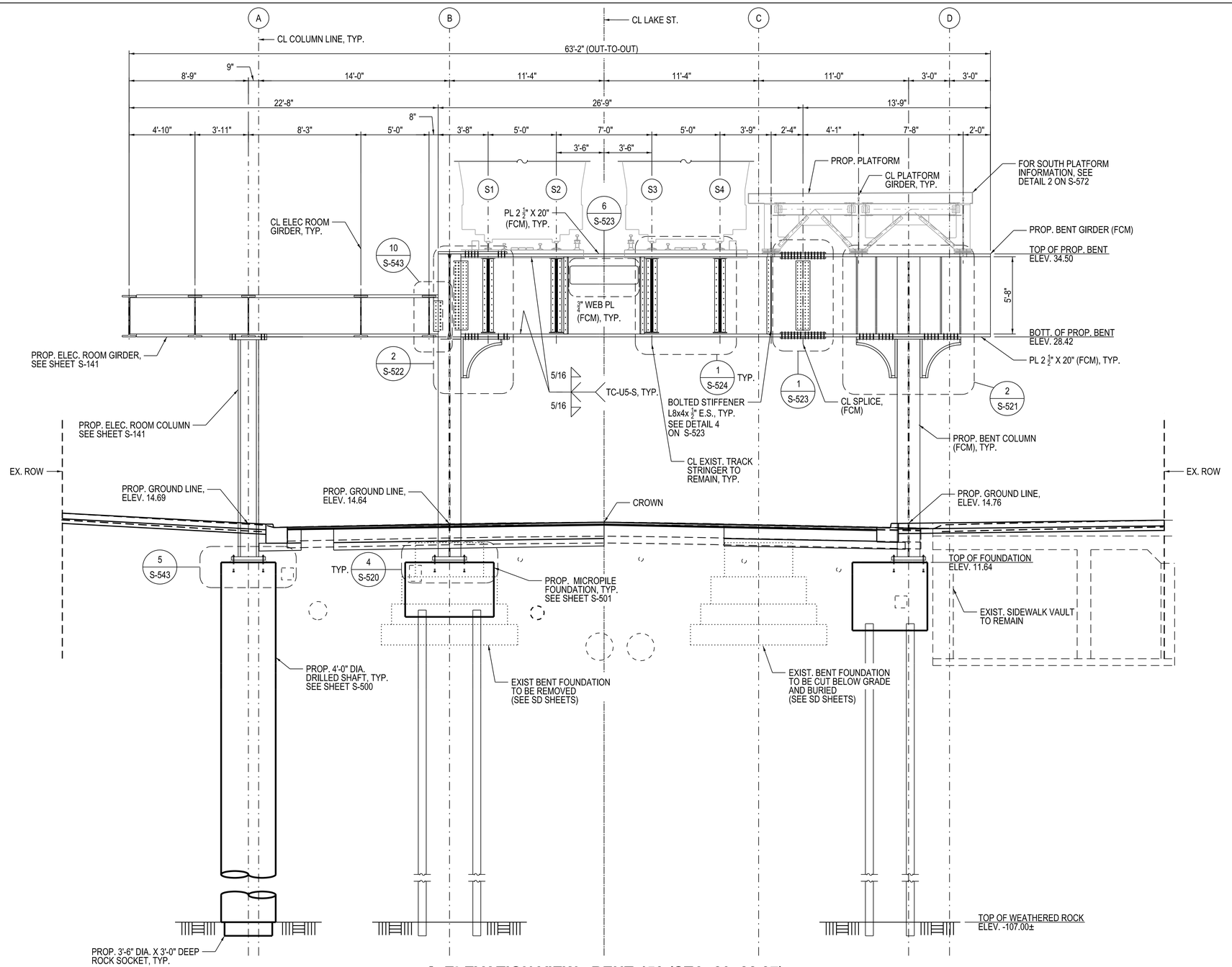

1 ELEVATION VIEW - BENT 453 (STA. 20+22.87)

1/4" = 1'-0" (LOOKING EAST)

DESIGN BY:	CMG								
DRAWN BY:	CMG								
CHECKED BY:	WJC								
APPROVED BY:	WJC	4	7/3/2023	ISSUED FOR BID					
CDOT/APPROVED BY:		NO.	DATE	REVISIONS	DES.	DRW.	CHK.	DCCO	CDOT

TRANSYSTEMS
222 SOUTH RIVERSIDE PLAZA SUITE 610
CHICAGO, ILLINOIS 60606

SKIDMORE, OWINGS & MERRILL LLP
224 SOUTH MICHIGAN AVENUE, SUITE 1000
CHICAGO, ILLINOIS 60604

CHICAGO DEPARTMENT OF TRANSPORTATION
DIVISION OF ENGINEERING

STATE / LAKE LOOP ELEVATED STATION
200 NORTH STATE STREET, CHICAGO, IL 60601

BENT 453 ELEVATION

CDOT PROJECT D-1-209 | DATE: 7/3/2023

SPEC. NO.

DRAWING NO. S-310

REVISION NO.

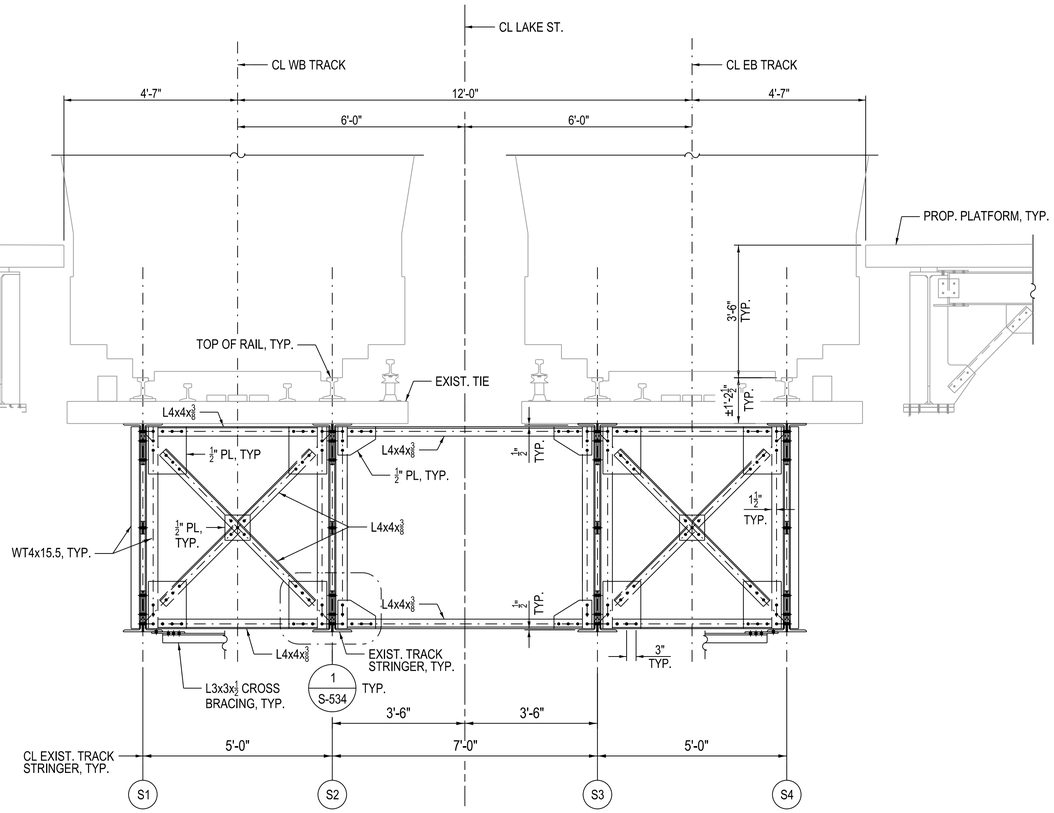

1 SECTION THRU EXIST. TRACK STRINGERS (CF-T1)

1/2" = 1'-0" (LOOKING EAST, 10 LOCATIONS)

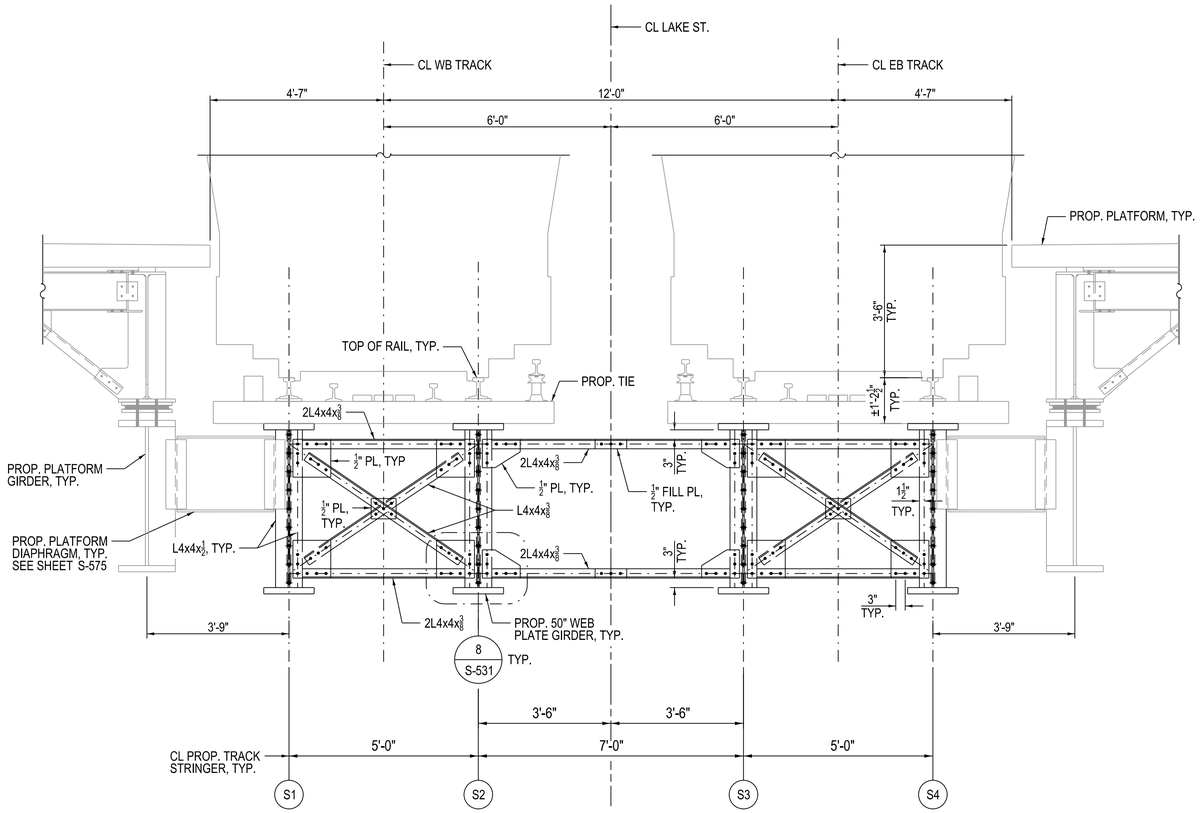

2 SECTION THRU PROP. TRACK STRINGERS (CF-T2)

1/2" = 1'-0" (LOOKING EAST, 4 LOCATIONS)

DESIGN BY:	WJC								
DRAWN BY:	WJC								
CHECKED BY:	MDS								
APPROVED BY:	MDS	4	7/3/2023	ISSUED FOR BID					
CDOT/APPROVED BY:		NO.	DATE	REVISIONS	DES.	DRW.	CHK.	DCCO	CDOT

TRANSYSTEMS
222 SOUTH RIVERSIDE PLAZA SUITE 610
CHICAGO, ILLINOIS 60606

SKIDMORE, OWINGS & MERRILL LLP
224 SOUTH MICHIGAN AVENUE, SUITE 1000
CHICAGO, ILLINOIS 60604

CHICAGO DEPARTMENT OF TRANSPORTATION
DIVISION OF ENGINEERING

STATE / LAKE LOOP ELEVATED STATION
200 NORTH STATE STREET, CHICAGO, IL 60601

CROSS SECTIONS THRU TRACK STRINGERS

CDOT PROJECT D-1-209

DATE: 7/3/2023

SPEC. NO.

DRAWING NO. S-330

REVISION NO.

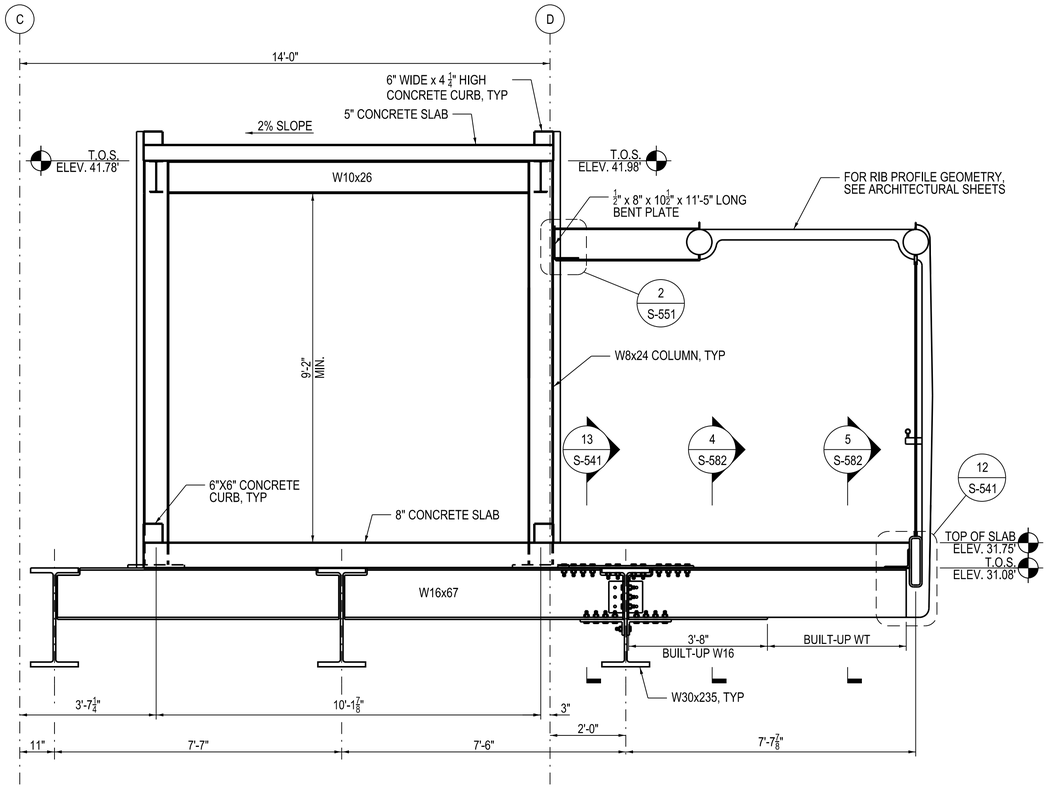

1 COMM ROOM SECTION

1/2" = 1'-0"

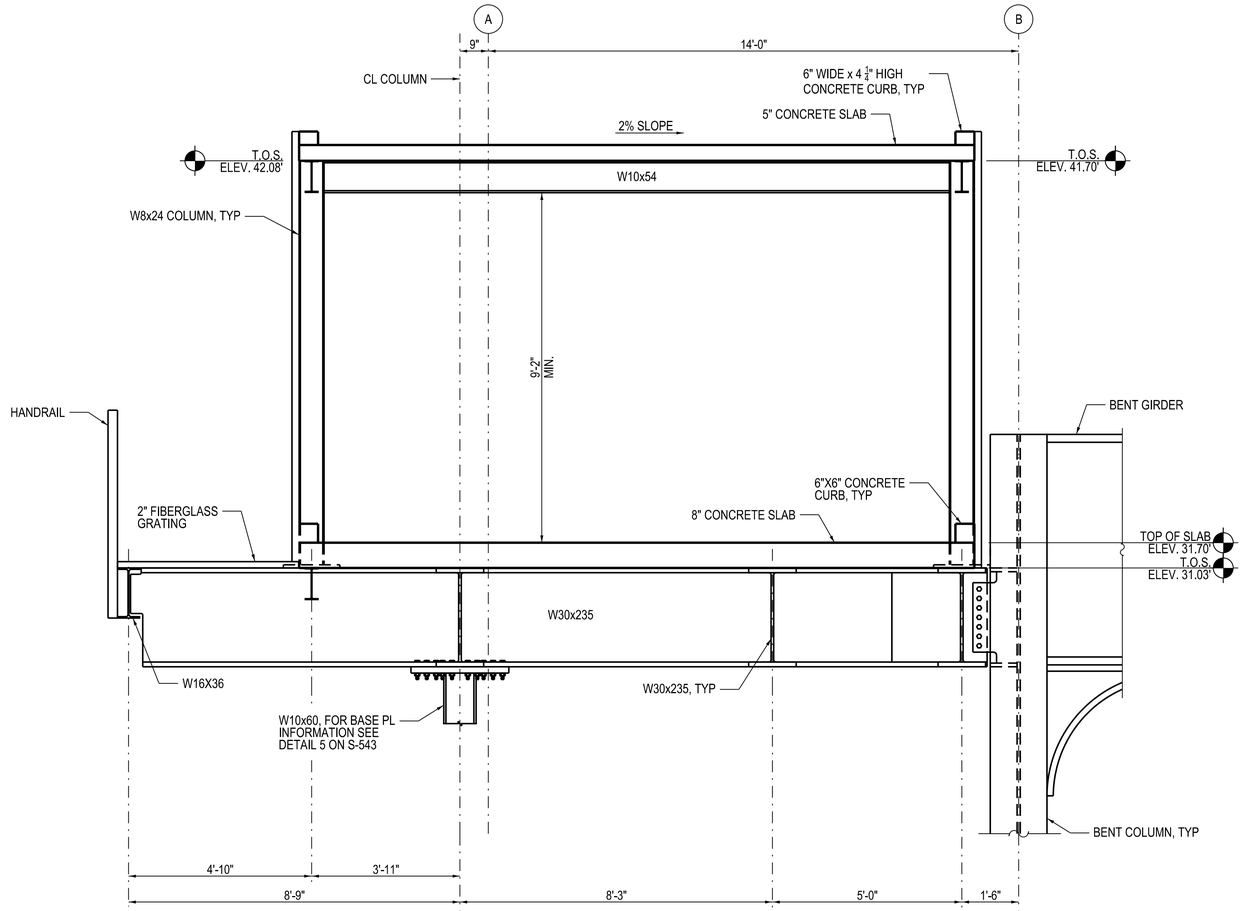

2 ELEC ROOM SECTION

1/2" = 1'-0"

DESIGN BY:	IS/MD								
DRAWN BY:	CMD								
CHECKED BY:	DKS								
APPROVED BY:	WJC	4	7/3/2023	ISSUED FOR BID					
CDOT/APPROVED BY:		NO.	DATE	REVISIONS	DES.	DRW.	CHK.	DCCO	CDOT

TRANSYSTEMS
222 SOUTH RIVERSIDE PLAZA SUITE 610
CHICAGO, ILLINOIS 60606

SKIDMORE, OWINGS & MERRILL LLP
224 SOUTH MICHIGAN AVENUE, SUITE 1000
CHICAGO, ILLINOIS 60604

CHICAGO DEPARTMENT OF TRANSPORTATION
DIVISION OF ENGINEERING

STATE / LAKE LOOP ELEVATED STATION
200 NORTH STATE STREET, CHICAGO, IL 60601

SPEC. NO.

COMMUNICATIONS & ELECTRICAL ROOM SECTIONS

DRAWING NO. S-340

CDOT PROJECT D-1-209 | DATE: 7/3/2023 | REVISION NO.

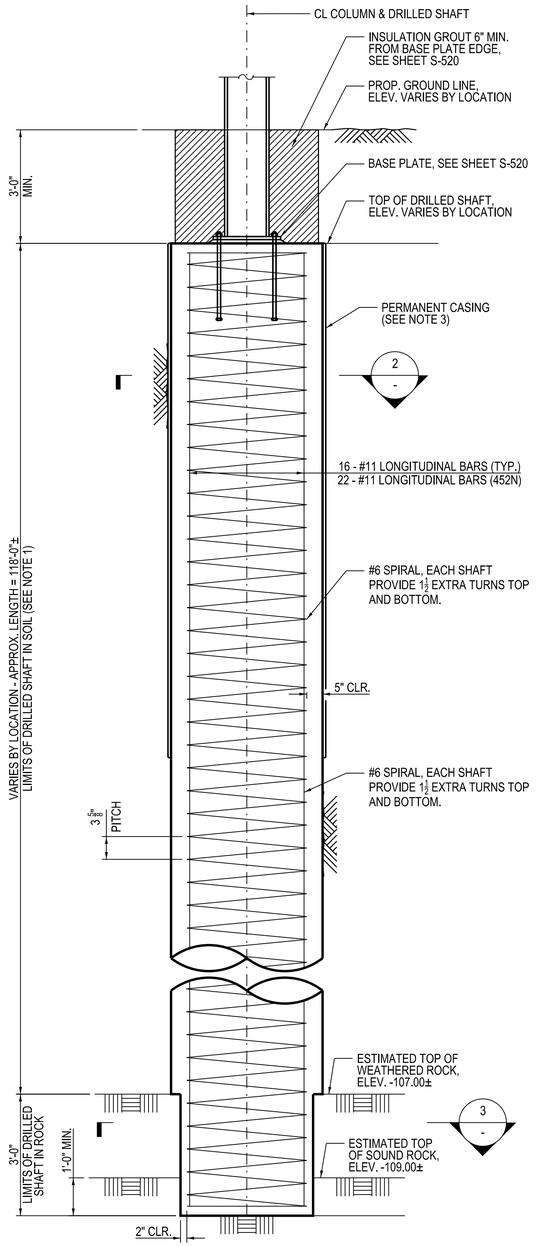

1 DRILLED SHAFT ELEVATION (DS-1)
N.T.S.

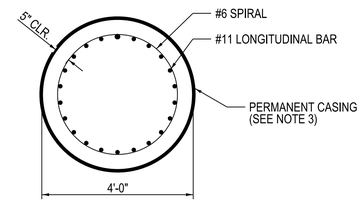

2 SECTION THROUGH SHAFT
N.T.S.

MIN. LAP SPLICE

**#11 LONGITUDINAL BAR: 5'-5"

#6 SPIRAL: 4'-6"

**MECHANICAL SPLICES MAY BE USED IN LIEU OF A LAP SPLICE FOR LONGITUDINAL BARS. SEE SPECIFICATIONS FOR MECHANICAL SPLICE REQUIREMENTS.

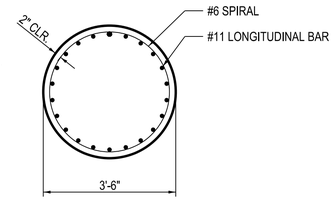

3 SECTION THROUGH ROCK SOCKET
N.T.S.

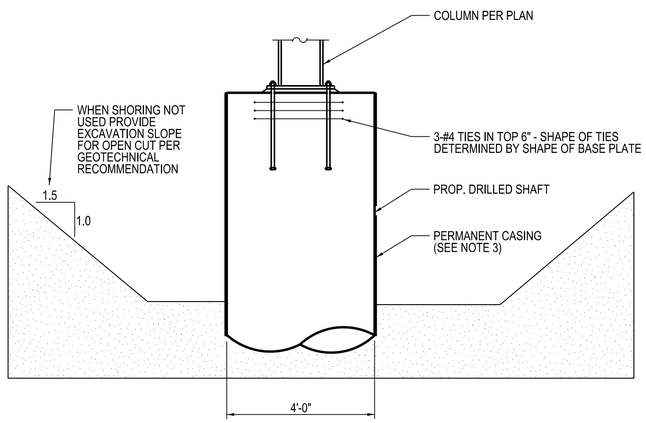

4 PROP. DRILLED SHAFT
N.T.S.

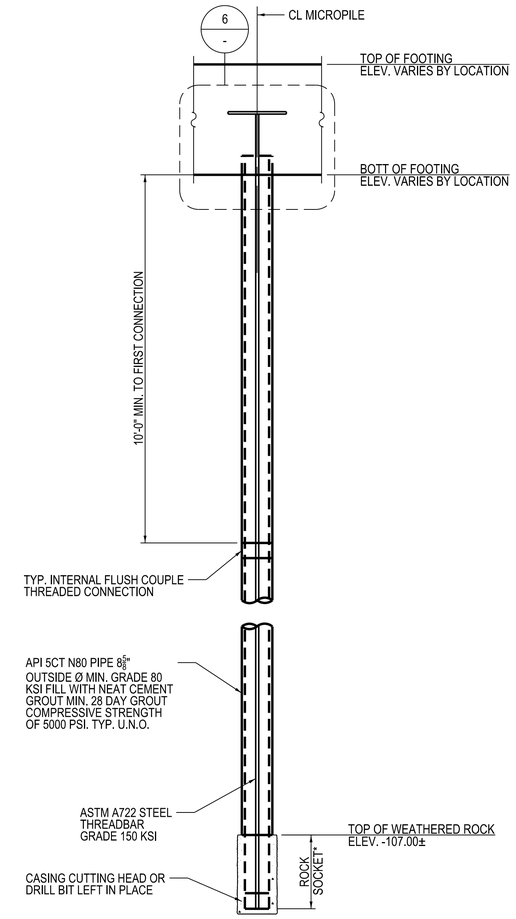

5 TYPICAL DRILLED IN PLACE VERTICAL MICROPILE
N.T.S.

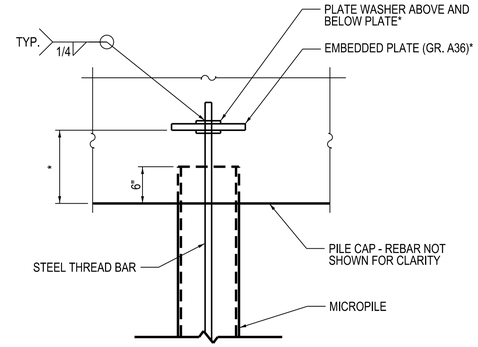

6 TYPICAL PILE CAP EMBEDMENT
N.T.S.

* TO BE DETERMINED BY THE CONTRACTOR. SEE SPECIFICATIONS FOR MORE INFORMATION.

DRILLED SHAFT NOTES:

1. THE DRILLED SHAFT LENGTH IS BASED ON THE TOP OF SHAFT AND THE ESTIMATED TOP OF ROCK ELEVATIONS SHOWN AND MAY CHANGE BASED ON THE ACTUAL TOP OF ROCK ENCOUNTERED AT EACH SHAFT AND THE FINAL TOP OF SHAFT ELEVATION. ELEVATIONS ARE TO BE VERIFIED BY THE GEOTECHNICAL ENGINEER.
2. WHEN SPLICING SPIRAL REINFORCEMENT IS NECESSARY, THE SPIRALS SHALL BE PROVIDED WITH 1½ EXTRA TURNS AT THE ENDS TO BE SPLICED. THESE ADDITIONAL TURNS SHALL EITHER BE WELDED TOGETHER ACCORDING TO AWS D1.4, OR SHALL BOTH TERMINATE IN 135° STANDARD HOOK.
3. PERMANENT CASING SHALL BE REQUIRED AT ALL DRILLED SHAFT LOCATIONS. REFER TO THE SPECIFICATIONS FOR THE REQUIRED DEPTH AND THICKNESS OF THE PERMANENT CASING. THE USE OF TEMPORARY CASING OR ALTERNATE METHODS WILL NOT BE PERMITTED WITHOUT WRITTEN APPROVAL FROM THE COMMISSIONER.

MICROPILE DESIGN NOTES:

1. DESIGN COMPRESSIVE SERVICE LOAD = 120 KIPS
2. DESIGN UPLIFT SERVICE LOAD = 20 KIPS
3. DESIGN LATERAL SERVICE LOAD = 10 KIPS
4. SEE GENERAL NOTES FOR DESIGN SUBMITTALS AND CALCULATION REQUIREMENTS.

DESIGN BY:	CG									
DRAWN BY:	CG									
CHECKED BY:	WJC									
APPROVED BY:	MDS	4	7/3/2023	ISSUED FOR BID						
CDOT/APPROVED BY:		NO.	DATE	REVISIONS	DES.	DRW.	CHK.	DCCO	CDOT	

TRANSYSTEMS
222 SOUTH RIVERSIDE PLAZA SUITE 610
CHICAGO, ILLINOIS 60606

SKIDMORE, OWINGS & MERRILL LLP
224 SOUTH MICHIGAN AVENUE, SUITE 1000
CHICAGO, ILLINOIS 60604

CHICAGO DEPARTMENT OF TRANSPORTATION
DIVISION OF ENGINEERING

STATE / LAKE LOOP ELEVATED STATION
200 NORTH STATE STREET, CHICAGO, IL 60601

DRILLED SHAFT AND MICROPILE DETAILS

CDOT PROJECT D-1-209 | DATE: 7/3/2023

SPEC. NO.

DRAWING NO. S-500

REVISION NO.

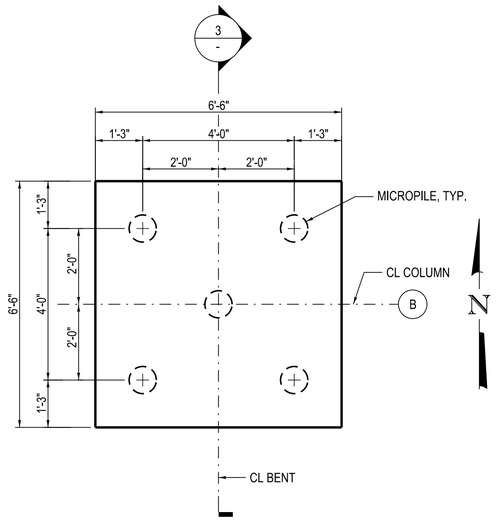

1 PILE CAP FOUNDATION PLAN (PC-T1)
1/2" = 1'-0"

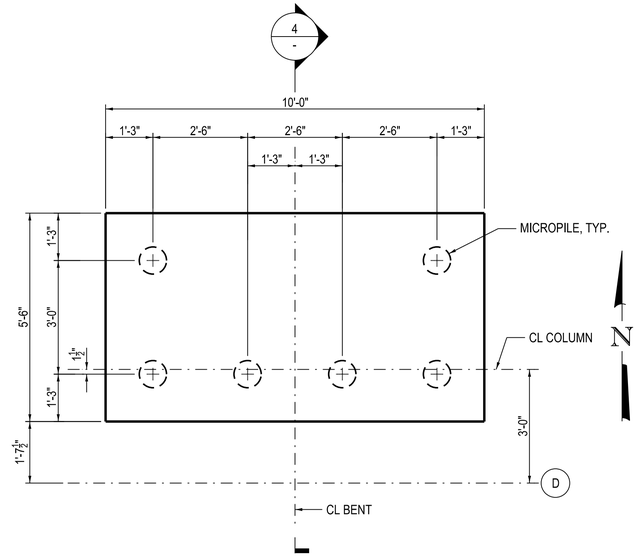

2 PILE CAP FOUNDATION PLAN (PC-T2)
1/2" = 1'-0"

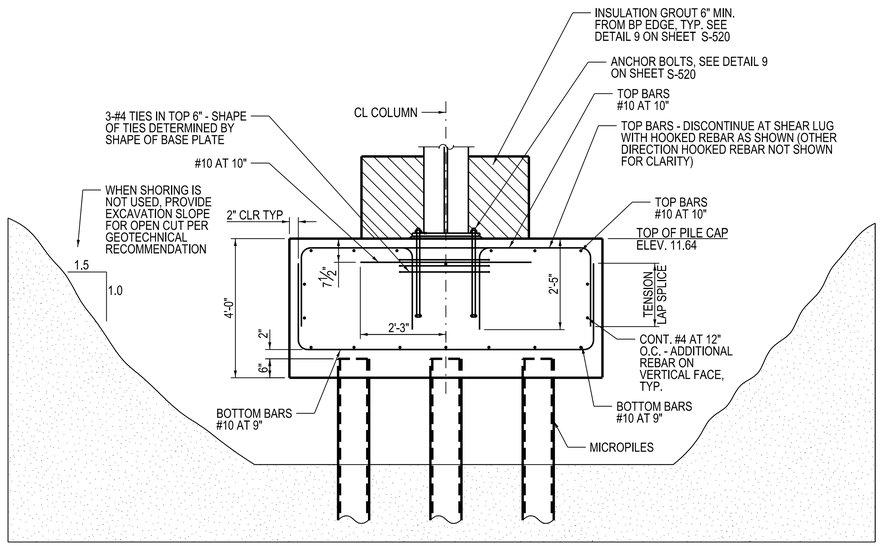

3 PILE CAP FOUNDATION SECTION (PC-T1)
N.T.S.

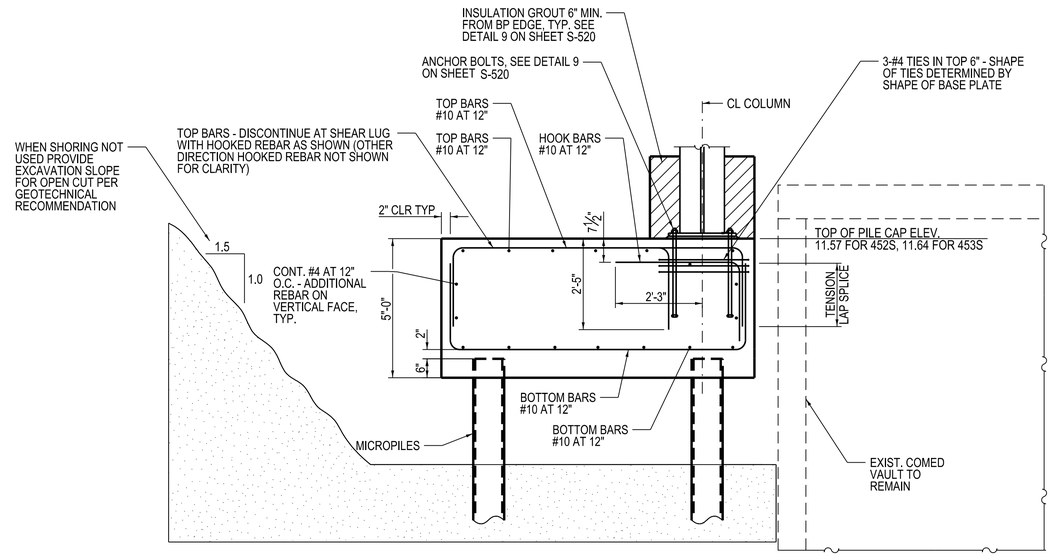

4 PILE CAP FOUNDATION SECTION (PC-T2)
N.T.S.

DESIGN BY:	CG								
DRAWN BY:	JPL								
CHECKED BY:	WJC								
APPROVED BY:	WJC	4	7/3/2023	ISSUED FOR BID					
CDOT/APPROVED BY:		NO.	DATE	REVISIONS	DES.	DRW.	CHK.	DCCO	CDOT

TRANSYSTEMS
222 SOUTH RIVERSIDE PLAZA SUITE 610
CHICAGO, ILLINOIS 60606

SKIDMORE, OWINGS & MERRILL LLP
224 SOUTH MICHIGAN AVENUE, SUITE 1000
CHICAGO, ILLINOIS 60604

CHICAGO DEPARTMENT OF TRANSPORTATION
DIVISION OF ENGINEERING

STATE / LAKE LOOP ELEVATED STATION
200 NORTH STATE STREET, CHICAGO, IL 60601

BENT PILE CAP FOUNDATION PLAN AND DETAILS 1

CDOT PROJECT D-1-209

DATE: 7/3/2023

SPEC. NO.

DRAWING NO. S-501

REVISION NO.

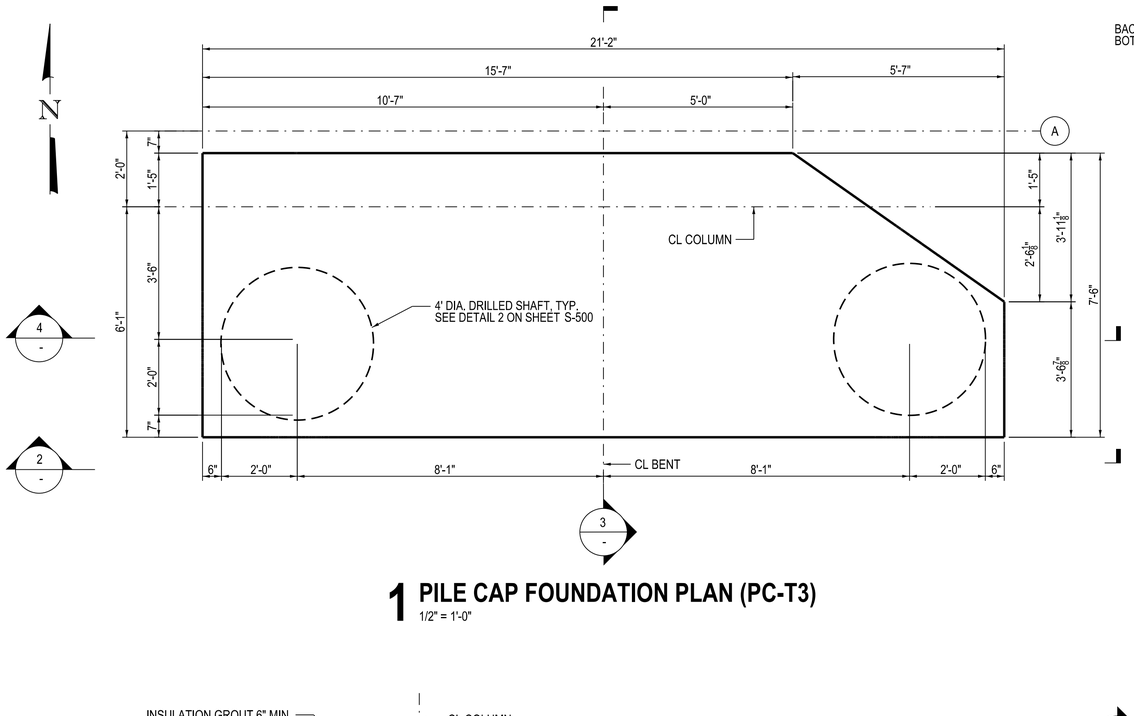

1 PILE CAP FOUNDATION PLAN (PC-T3)
1/2" = 1'-0"

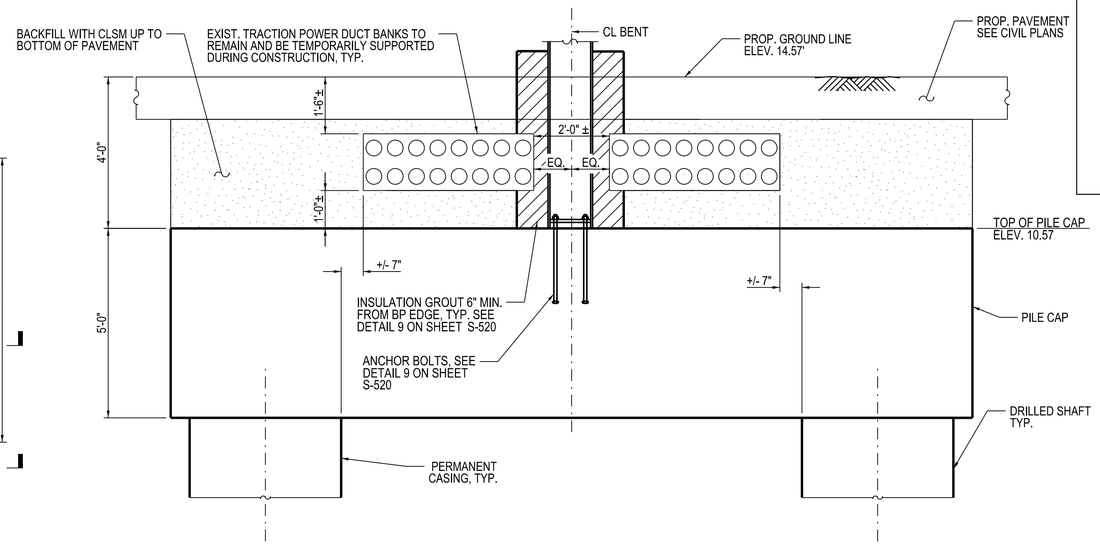

2 PILE CAP FOUNDATION ELEVATION (PC-T3)
1/2" = 1'-0"

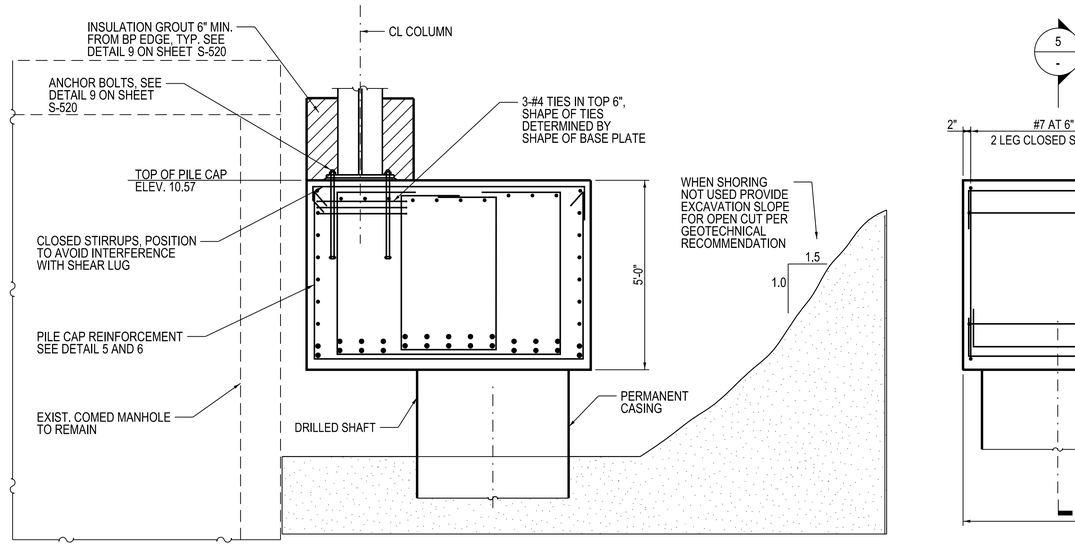

3 PILE CAP FOUNDATION SECTION (PC-T3)
1/2" = 1'-0"

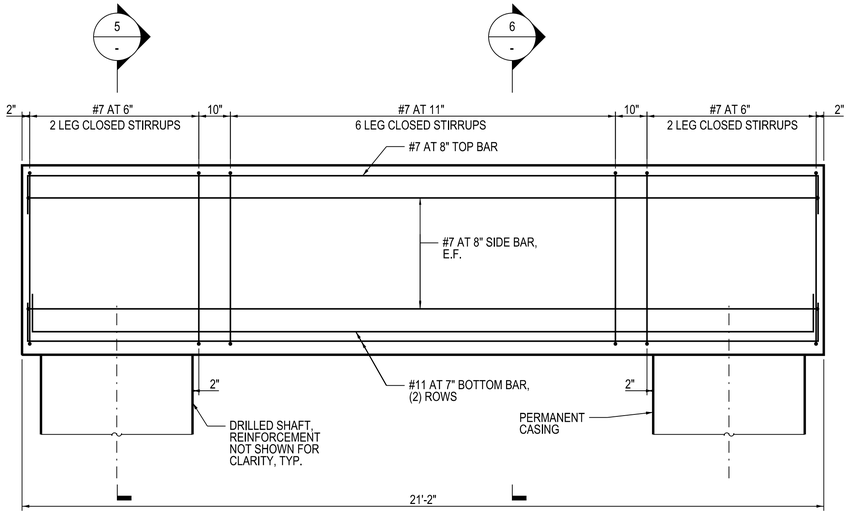

4 PILE CAP FOUNDATION REINFORCEMENT SECTION (PC-T3)
1/2" = 1'-0"

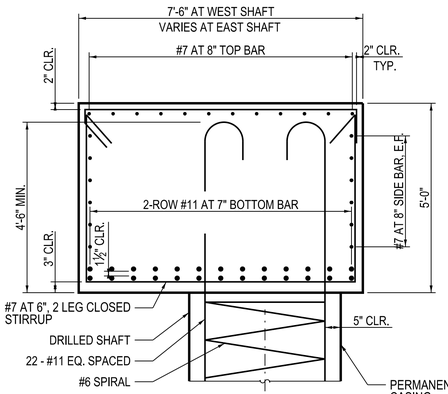

5 SECTION AT SHAFTS
1/2" = 1'-0"

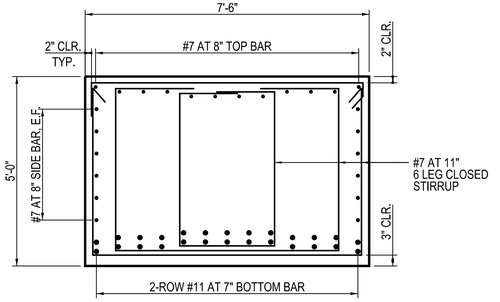

6 SECTION BETWEEN SHAFTS
1/2" = 1'-0"

DESIGN BY:	CG								
DRAWN BY:	CG								
CHECKED BY:	WJC								
APPROVED BY:	WJC	4	7/3/2023	ISSUED FOR BID					
CDOT/APPROVED BY:		NO.	DATE	REVISIONS	DES.	DRW.	CHK.	DCCO	CDOT

TRANSYSTEMS
222 SOUTH RIVERSIDE PLAZA SUITE 610
CHICAGO, ILLINOIS 60606

SKIDMORE, OWINGS & MERRILL LLP
224 SOUTH MICHIGAN AVENUE, SUITE 1000
CHICAGO, ILLINOIS 60604

CHICAGO DEPARTMENT OF TRANSPORTATION
DIVISION OF ENGINEERING

STATE / LAKE LOOP ELEVATED STATION
200 NORTH STATE STREET, CHICAGO, IL 60601

BENT PILE CAP FOUNDATION PLAN AND DETAILS 2

CDOT PROJECT D-1-209

DATE: 7/3/2023

SPEC. NO.

DRAWING NO. S-502

REVISION NO.

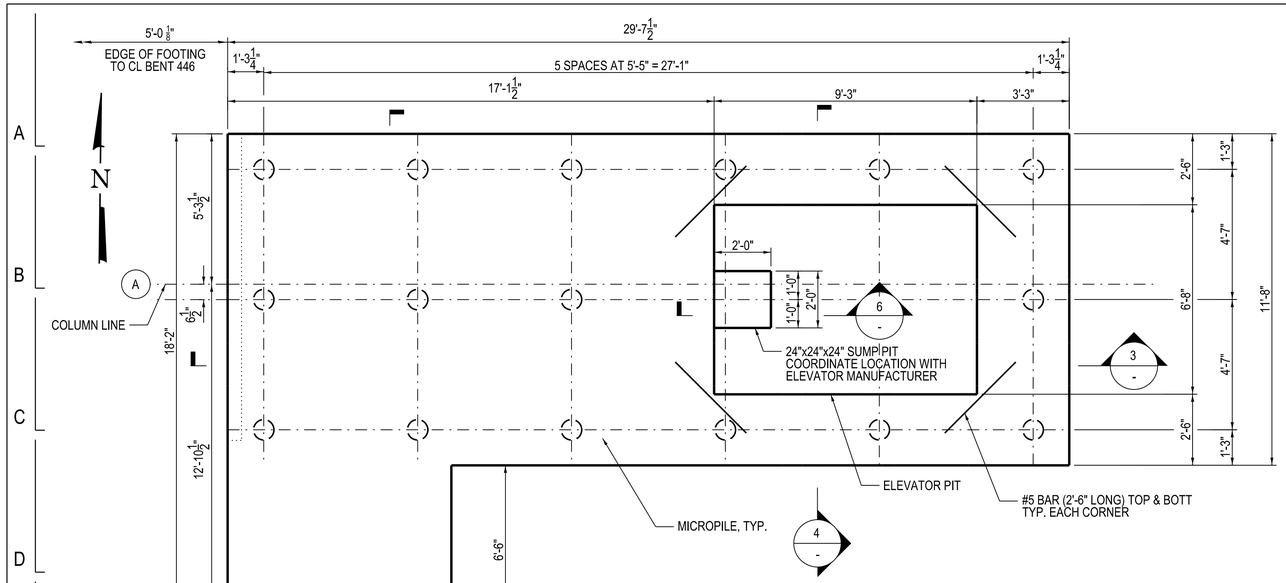

1 NORTH FOUNDATION PLAN
3/8" = 1'-0"

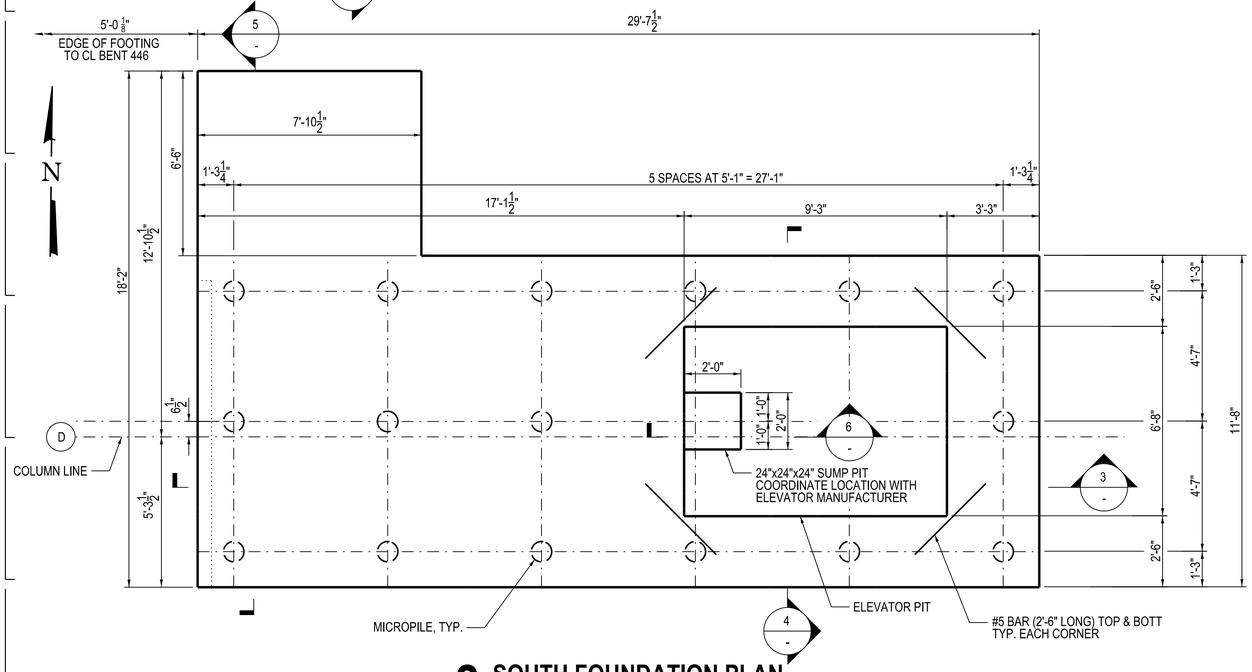

2 SOUTH FOUNDATION PLAN
3/8" = 1'-0"

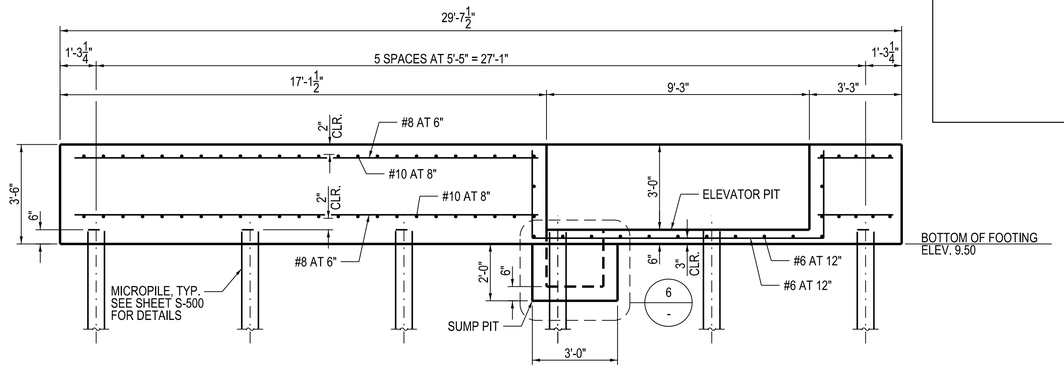

3 SECTION THRU FOOTING
3/8" = 1'-0"

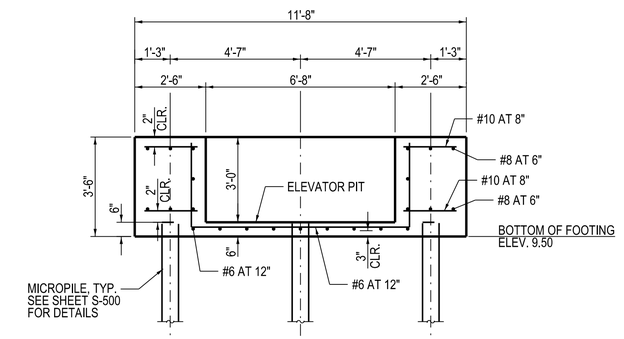

4 SECTION THRU FOOTING
3/8" = 1'-0"

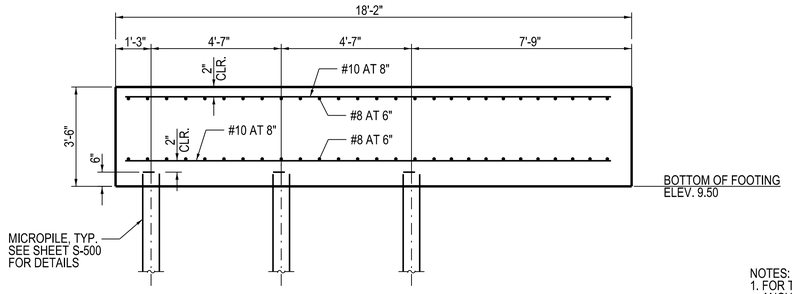

5 SECTION THRU FOOTING AT STAIR LANDING
3/8" = 1'-0"

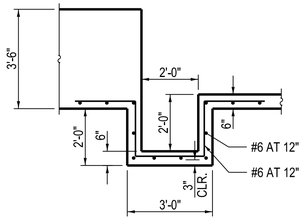

6 SUMP PIT DETAIL
3/8" = 1'-0"

NOTES:
1. FOR TOWER COLUMN, BASE PLATE, AND ANCHOR BOLT LOCATIONS AND DETAILS, SEE SHEET S-160.

DESIGN BY:	JRM								
DRAWN BY:	JPL								
CHECKED BY:	JRM								
APPROVED BY:	WJC	4	7/3/2023	ISSUED FOR BID					
CDOT/APPROVED BY:		NO.	DATE	REVISIONS	DES.	DRW.	CHK.	DCCO	CDOT

TRANSYSTEMS
222 SOUTH RIVERSIDE PLAZA SUITE 610
CHICAGO, ILLINOIS 60606

SKIDMORE, OWINGS & MERRILL LLP
224 SOUTH MICHIGAN AVENUE, SUITE 1000
CHICAGO, ILLINOIS 60604

CHICAGO DEPARTMENT OF TRANSPORTATION
DIVISION OF ENGINEERING

STATE / LAKE LOOP ELEVATED STATION
200 NORTH STATE STREET, CHICAGO, IL 60601

SPEC. NO.

ELEVATOR TOWER FOUNDATION PLAN AND DETAILS

DRAWING NO. S-503

CDOT PROJECT D-1-209 | DATE: 7/3/2023 | REVISION NO.

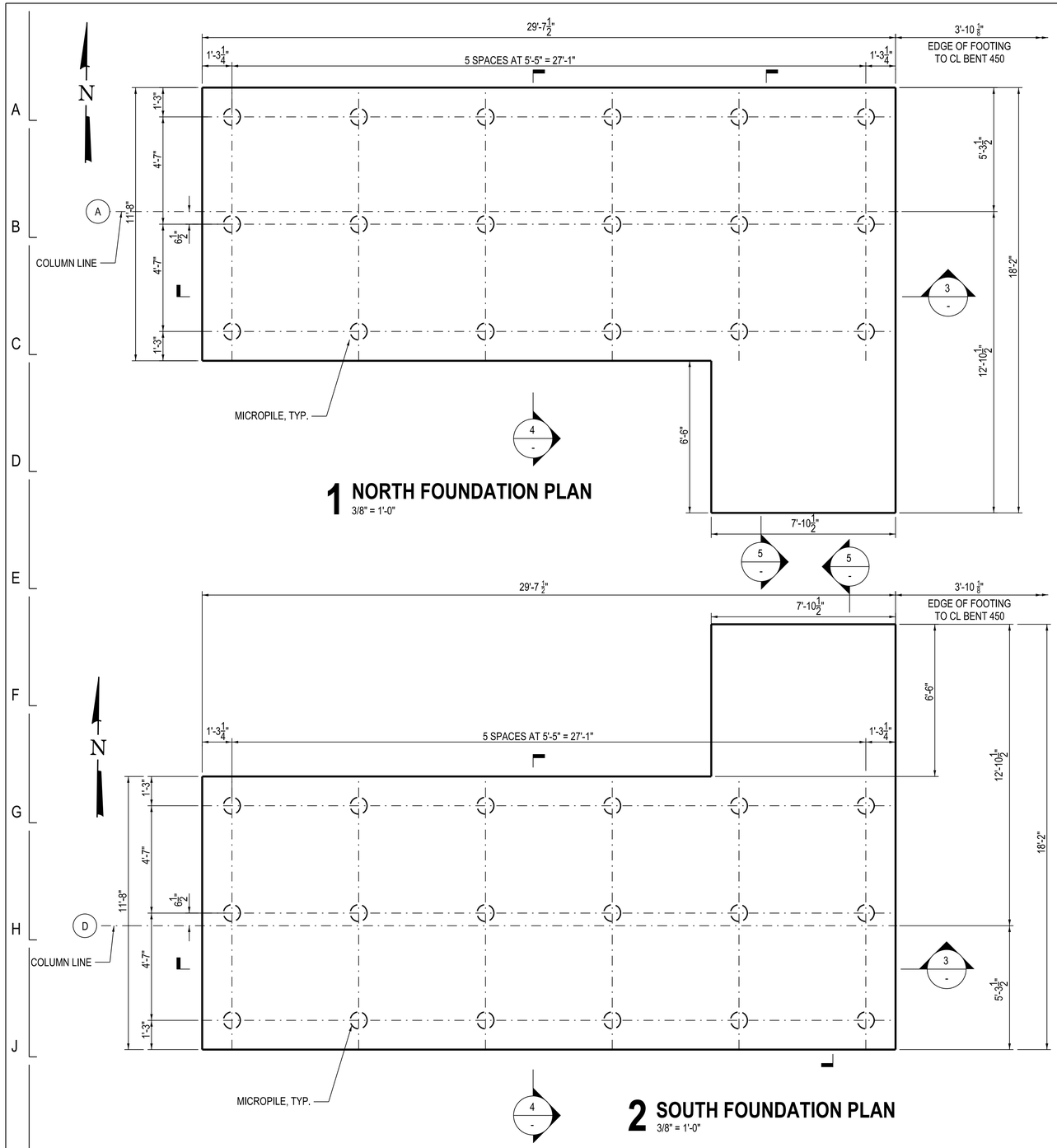

1 NORTH FOUNDATION PLAN
3/8" = 1'-0"

2 SOUTH FOUNDATION PLAN
3/8" = 1'-0"

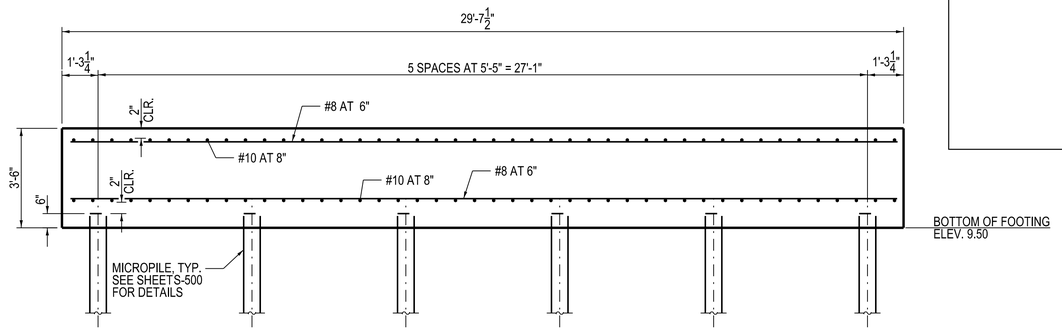

3 SECTION THRU FOOTING
3/8" = 1'-0"

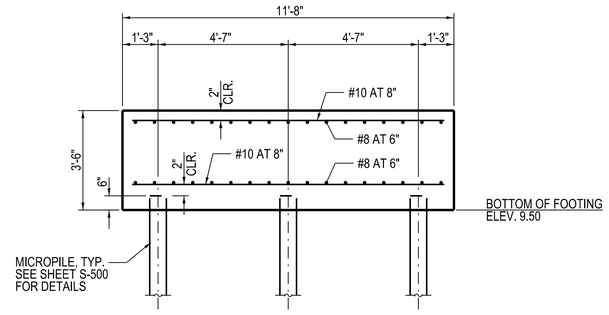

4 SECTION THRU FOOTING
3/8" = 1'-0"

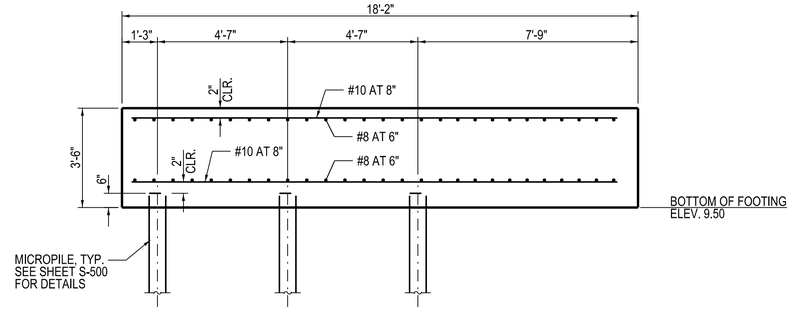

5 SECTION THRU FOOTING AT STAIR LANDING
3/8" = 1'-0"

NOTES:
1. FOR TOWER COLUMN, BASE PLATE, AND ANCHOR BOLT LOCATIONS AND DETAILS, SEE SHEET S-160.

DESIGN BY:	JRM								
DRAWN BY:	JPL								
CHECKED BY:	JRM								
APPROVED BY:	WJC	4	7/3/2023	ISSUED FOR BID					
CDOT/APPROVED BY:		NO.	DATE	REVISIONS	DES.	DRW.	CHK.	DCCO	CDOT

TRANSYSTEMS
222 SOUTH RIVERSIDE PLAZA SUITE 610
CHICAGO, ILLINOIS 60606

SKIDMORE, OWINGS & MERRILL LLP
224 SOUTH MICHIGAN AVENUE, SUITE 1000
CHICAGO, ILLINOIS 60604

CHICAGO DEPARTMENT OF TRANSPORTATION
DIVISION OF ENGINEERING

STATE / LAKE LOOP ELEVATED STATION
200 NORTH STATE STREET, CHICAGO, IL 60601

SPEC. NO.

ESCALATOR TOWER FOUNDATION PLAN AND DETAILS

DRAWING NO. S-504

CDOT PROJECT D-1-209 | DATE: 7/3/2023 | REVISION NO.

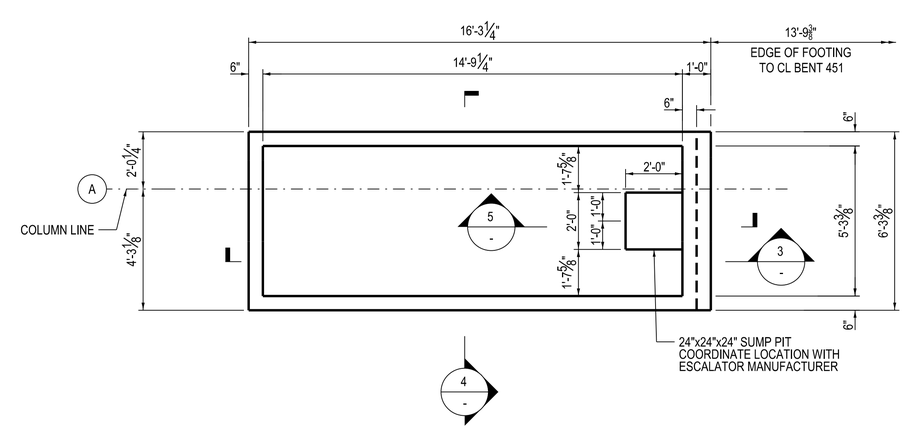

1 NORTH ESCALATOR PIT PLAN
3/8" = 1'-0"

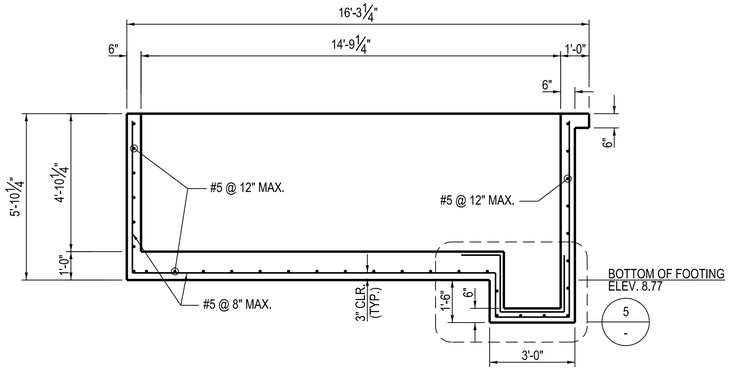

3 SECTION THRU ESCALATOR PIT
3/8" = 1'-0"

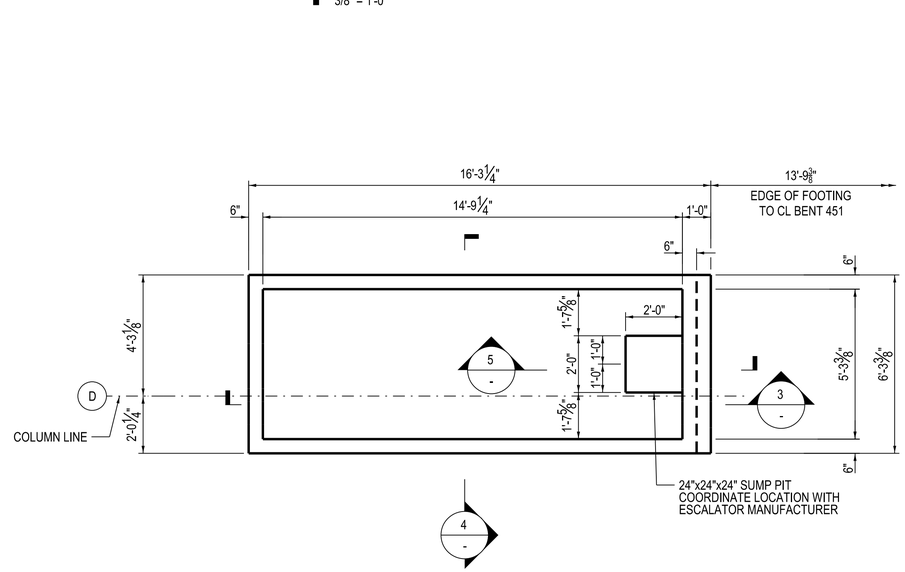

2 SOUTH ESCALATOR PIT PLAN
3/8" = 1'-0"

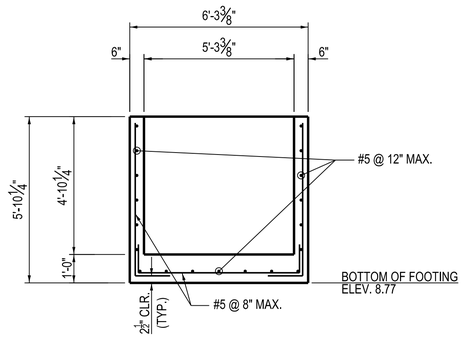

4 SECTION THRU ESCALATOR PIT
3/8" = 1'-0"

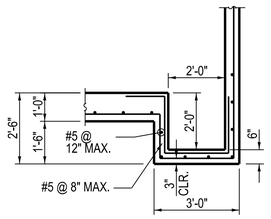

5 SUMP PIT DETAIL
3/8" = 1'-0"

DESIGN BY:	IS/MD								
DRAWN BY:	CMD								
CHECKED BY:	DKS								
APPROVED BY:	WJC	4	7/3/2023	ISSUED FOR BID					
CDOT/APPROVED BY:		NO.	DATE	REVISIONS	DES.	DRW.	CHK.	DCCO	CDOT

TRANSYSTEMS
222 SOUTH RIVERSIDE PLAZA SUITE 610
CHICAGO, ILLINOIS 60606

SKIDMORE, OWINGS & MERRILL LLP
224 SOUTH MICHIGAN AVENUE, SUITE 1000
CHICAGO, ILLINOIS 60604

CHICAGO DEPARTMENT
OF TRANSPORTATION
DIVISION OF ENGINEERING

STATE / LAKE LOOP ELEVATED STATION
200 NORTH STATE STREET, CHICAGO, IL 60601

ESCALATOR PIT FOUNDATION PLAN AND DETAILS

CDOT PROJECT D-1-209

DATE: 7/3/2023

SPEC. NO.

DRAWING NO.
S-505

REVISION NO.

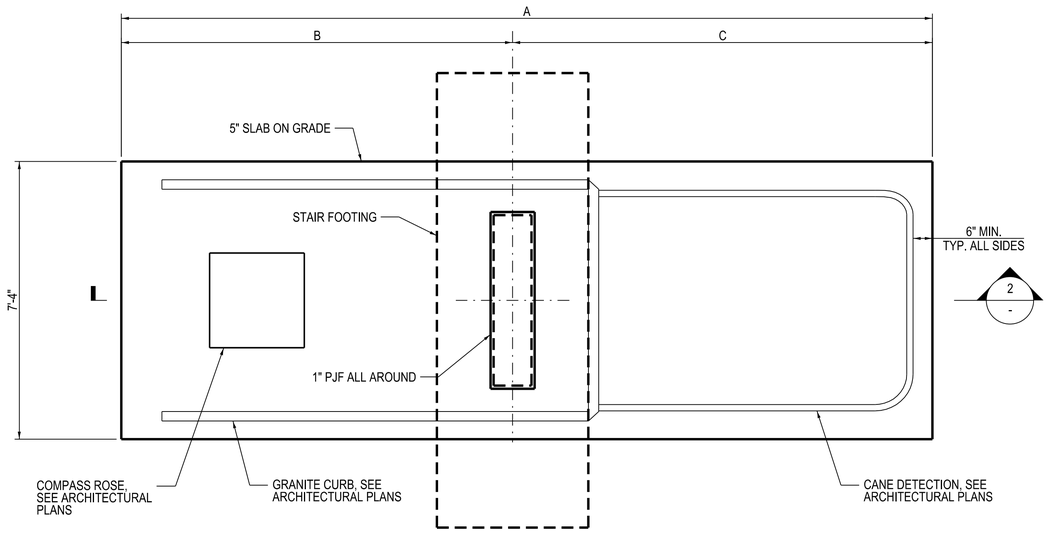

1 EXIT STAIR SLAB AND FOUNDATION PLAN
1/2" = 1'-0"

TABLE 1 - STAIR DIMENSIONS					
STAIRS	A	B	C	D	E
NW	21'-9"	11'-6"	10'-3"	1'-3"	5'-3"
SW	21'-9"	12'-6"	9'-3"	1'-10"	5'-10"
NE	21'-9"	12'-6"	9'-3"	1'-10"	5'-10"
SE	13'-6"	11'-0"	2'-6"	1'-3"	5'-3"

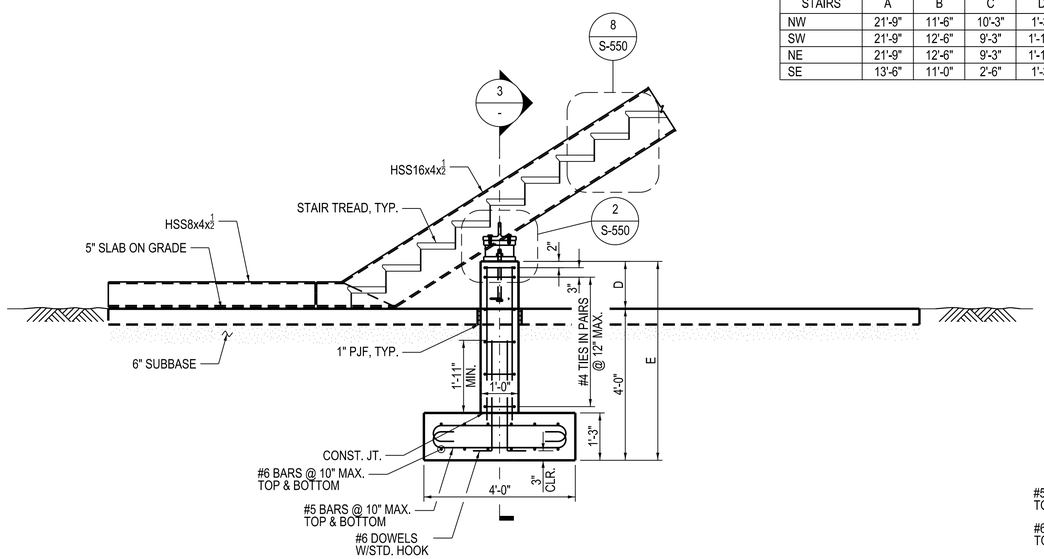

2 EXIT STAIR SLAB AND FOUNDATION ELEVATION
1/2" = 1'-0"

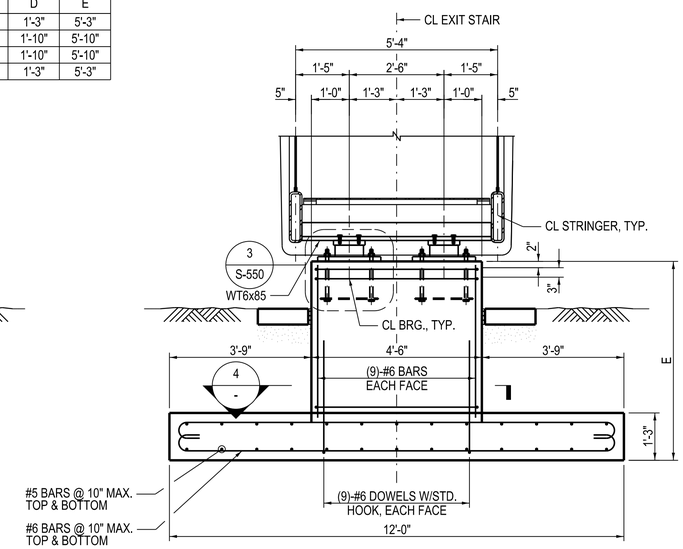

3 SECTION THRU STAIR AT FOUNDATION
1/2" = 1'-0"

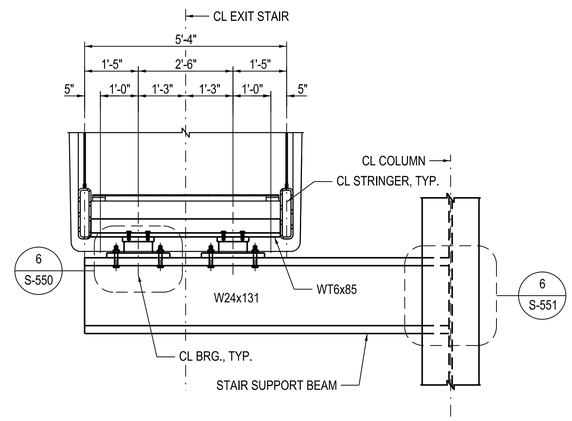

7 SECTION THRU STAIR AT SUPPORT BEAM
1/2" = 1'-0"

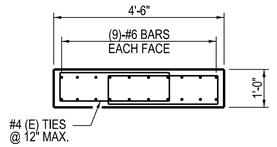

4 SECTION THRU FOUNDATION
1/2" = 1'-0"

NOTES:
1. ALL REINFORCEMENT SHALL BE EPOXY COATED.

DESIGN BY:	IS/MD									
DRAWN BY:	CMD									
CHECKED BY:	DKS									
APPROVED BY:	WJC	4	7/3/2023	ISSUED FOR BID						
CDOT/APPROVED BY:		NO.	DATE	REVISIONS	DES.	DRW.	CHK.	DCCO	CDOT	

TRANSYSTEMS
222 SOUTH RIVERSIDE PLAZA SUITE 610
CHICAGO, ILLINOIS 60606

SKIDMORE, OWINGS & MERRILL LLP
224 SOUTH MICHIGAN AVENUE, SUITE 1000
CHICAGO, ILLINOIS 60604

CHICAGO DEPARTMENT
OF TRANSPORTATION
DIVISION OF ENGINEERING

STATE / LAKE LOOP ELEVATED STATION
200 NORTH STATE STREET, CHICAGO, IL 60601

EXIT STAIR FOUNDATION PLAN AND DETAILS 1

CDOT PROJECT D-1-209

DATE: 7/3/2023

SPEC. NO.

DRAWING NO.
S-506

REVISION NO.

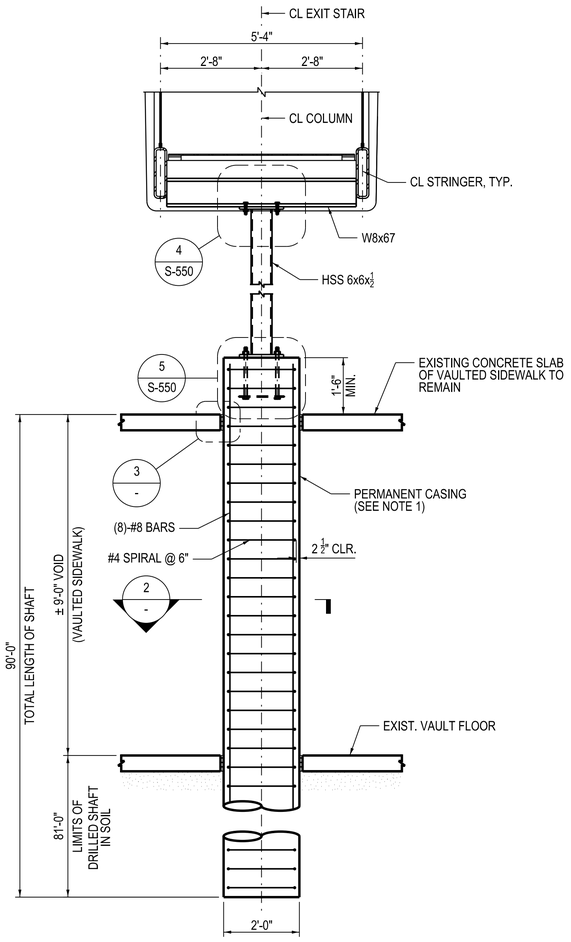

1 SECTION THRU STAIR AT COLUMN
1/2" = 1'-0"

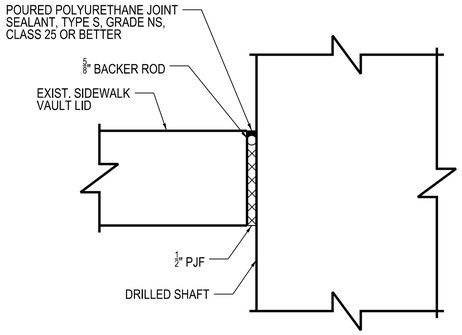

3 COLUMN JOINT DETAIL
6" = 1'-0"

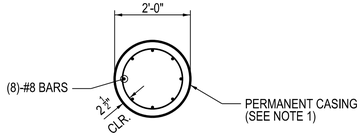

2 SECTION THRU COLUMN FOUNDATION
1/2" = 1'-0"

NOTES:
1. PERMANENT CASING SHALL BE REQUIRED AT ALL DRILLED SHAFT LOCATIONS. REFER TO THE SPECIFICATIONS FOR THE REQUIRED DEPTH AND THICKNESS OF THE PERMANENT CASING. THE USE OF TEMPORARY CASING OR ALTERNATE METHODS WILL NOT BE PERMITTED WITHOUT WRITTEN APPROVAL FROM THE COMMISSIONER.
2. ALL REINFORCEMENT SHALL BE EPOXY COATED.

DESIGN BY:	IS/MD								
DRAWN BY:	CMD								
CHECKED BY:	DKS								
APPROVED BY:	WJC	4	7/3/2023	ISSUED FOR BID					
CDOT/APPROVED BY:		NO.	DATE	REVISIONS	DES.	DRW.	CHK.	DCCO	CDOT

TRANSYSTEMS
222 SOUTH RIVERSIDE PLAZA SUITE 610
CHICAGO, ILLINOIS 60606

SKIDMORE, OWINGS & MERRILL LLP
224 SOUTH MICHIGAN AVENUE, SUITE 1000
CHICAGO, ILLINOIS 60604

CHICAGO DEPARTMENT OF TRANSPORTATION
DIVISION OF ENGINEERING

STATE / LAKE LOOP ELEVATED STATION
200 NORTH STATE STREET, CHICAGO, IL 60601

EXIT STAIR FOUNDATION PLAN AND DETAILS 2

CDOT PROJECT D-1-209 | DATE: 7/3/2023

SPEC. NO.

DRAWING NO. S-507

REVISION NO.

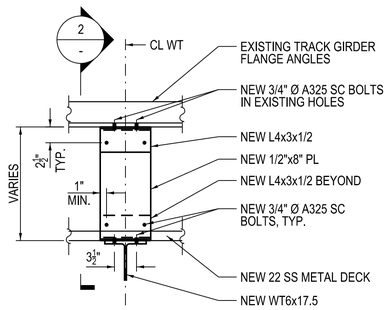

1 DRIP PAN HANGER CONNECTION
1" = 1'-0"

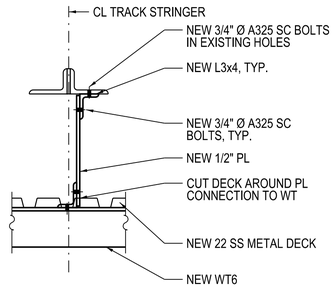

2 SECTION
1" = 1'-0"

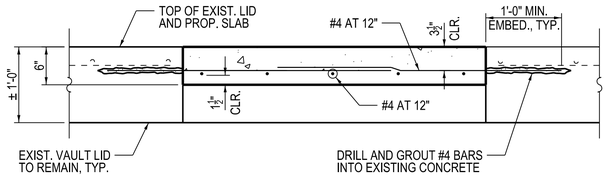

5 SECTION
1" = 1'-0"

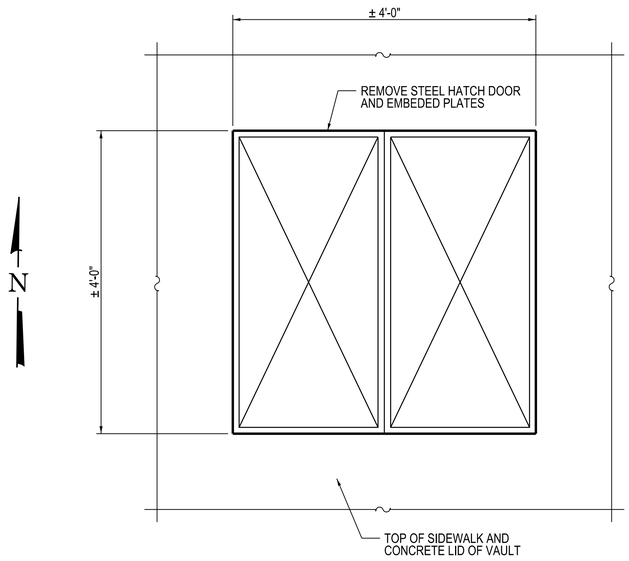

3 VAULT HATCH DOOR REMOVAL PLAN
1" = 1'-0"

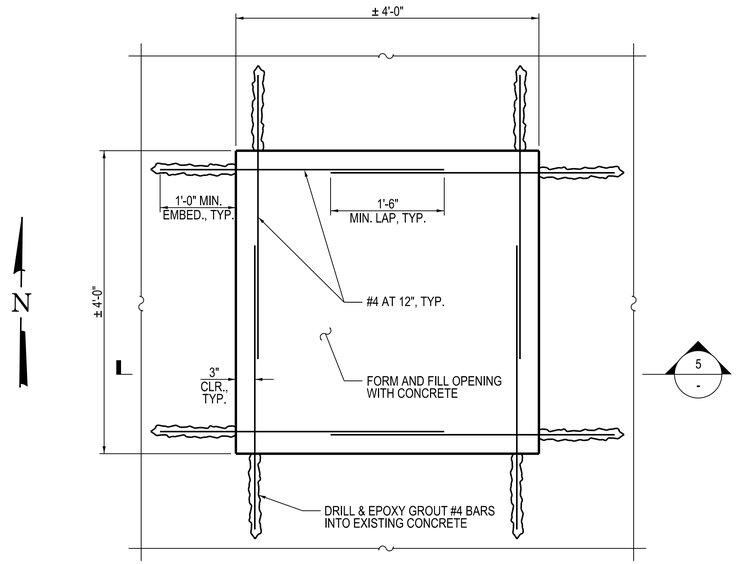

4 VAULT HATCH DOOR FILLING PLAN
1" = 1'-0"

NOTES:

1. ALL REINFORCEMENT SHALL BE EPOXY COATED.
2. EXISTING REINFORCING BARS IN EXISTING CONCRETE SHALL BE LOCATED BEFORE DRILLING HOLES INTO THE EXISTING STRUCTURE. DAMAGE TO THE EXISTING REINFORCEMENT SHALL BE MINIMIZED. THE CONTRACTOR SHALL PROVIDE THE ENGINEER WITH THE PROPOSED METHOD OF LOCATING EXISTING REINFORCEMENT FOR APPROVAL.
3. FOR ANCHORAGE OF REINFORCING INTO EXISTING CONCRETE, USE HILTI HIT-RE 500-V3 REPORT EPOXY (ICC ESR-3814) OR APPROVED EQUAL. INSTALL PER ICC AND MANUFACTURER'S PRINTED INSTALLATION INSTRUCTIONS. SUBSTITUTES COMPLYING WITH ACI 318 FOR USE IN CRACKED CONCRETE MAY BE CONSIDERED. THE CONTRACTOR SHALL PROVIDE THE ENGINEER AN EVALUATION REPORT DEMONSTRATING COMPLIANCE WITH THE GOVERNING CODE PRIOR TO INSTALLATION.

DESIGN BY:	WJC								
DRAWN BY:	WJC								
CHECKED BY:	MDS								
APPROVED BY:	MDS	4	7/3/2023	ISSUED FOR BID					
CDOT/APPROVED BY:		NO.	DATE	REVISIONS	DES.	DRW.	CHK.	DCCO	CDOT

TRANSYSTEMS
222 SOUTH RIVERSIDE PLAZA SUITE 610
CHICAGO, ILLINOIS 60606

SKIDMORE, OWINGS & MERRILL LLP
224 SOUTH MICHIGAN AVENUE, SUITE 1000
CHICAGO, ILLINOIS 60604

CHICAGO DEPARTMENT OF TRANSPORTATION
DIVISION OF ENGINEERING

STATE / LAKE LOOP ELEVATED STATION
200 NORTH STATE STREET, CHICAGO, IL 60601

SPEC. NO.

MISCELLANEOUS STRUCTURAL DETAILS

DRAWING NO.
S-510

CDOT PROJECT D-1-209

DATE: 7/3/2023

REVISION NO.

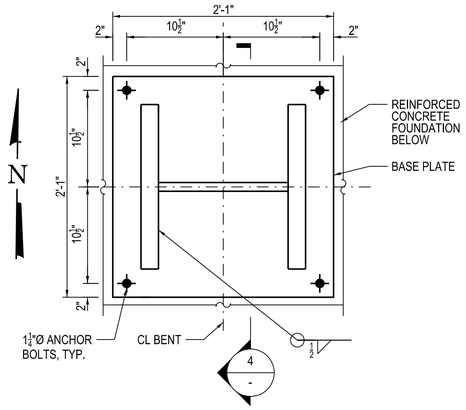

1 BASE PLATE PLAN - TYPE 1
N.T.S. (16 LOCATIONS)

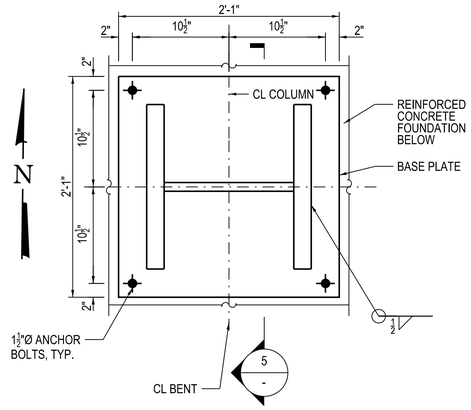

2 BASE PLATE PLAN - TYPE 2
N.T.S. (4 LOCATIONS)

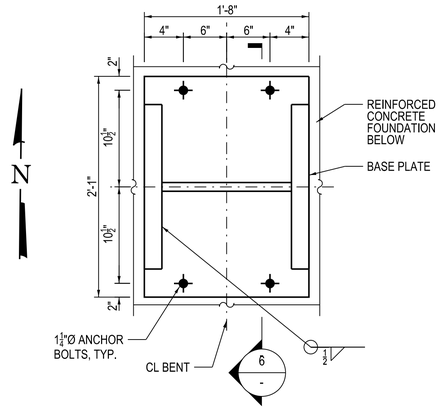

3 BASE PLATE PLAN - TYPE 3
N.T.S. (1 LOCATION)

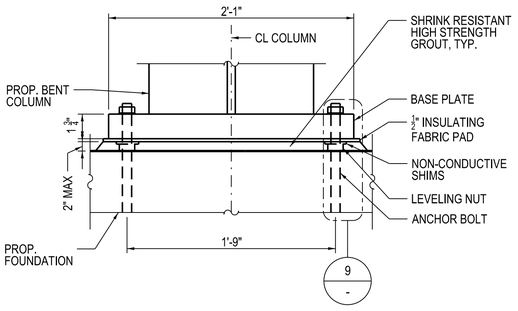

4 BASE PLATE SECTION - TYPE 1
N.T.S.

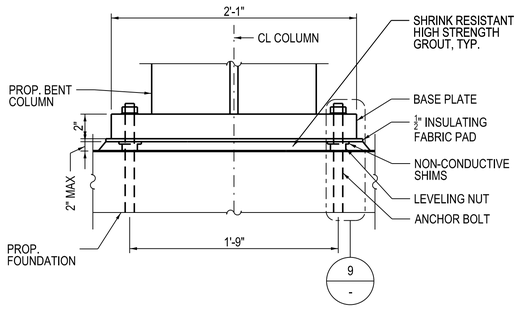

5 BASE PLATE SECTION - TYPE 2
N.T.S.

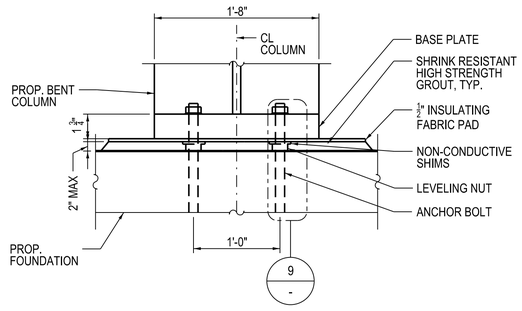

6 BASE PLATE SECTION - TYPE 3
N.T.S.

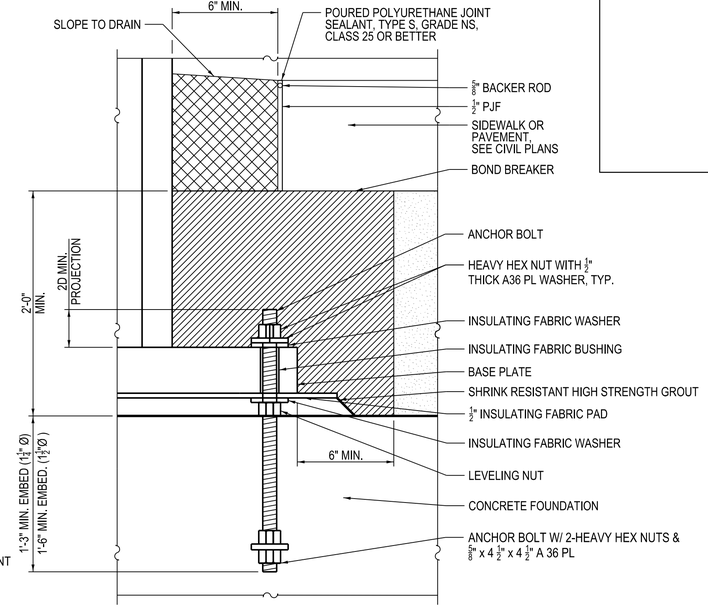

9 TYP. ANCHOR ROD & BASE PLATE INSULATION
N.T.S.

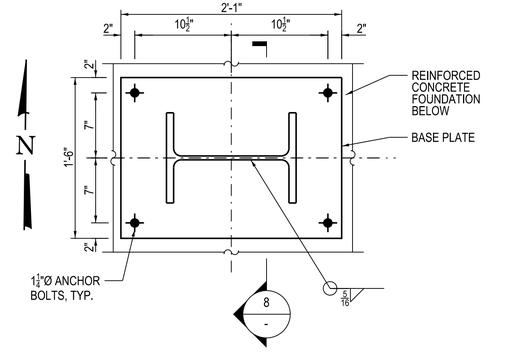

7 BASE PLATE PLAN - TYPE 4
N.T.S. (2 LOCATIONS)

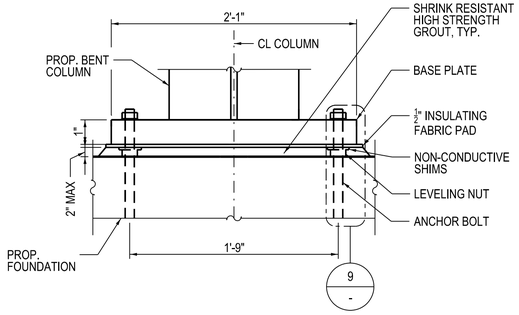

8 BASE PLATE SECTION - TYPE 4
N.T.S.

LEGEND

SIKA-Icosit SHALL BE ADDED TO PAVEMENT OR SIDEWALK CONCRETE IN THESE LOCATIONS

INDICATES EXTENTS OF SIKA-Icosit ® KC 300 RANGE POLYURETHANE INSULATION GROUT AROUND COLUMN BASE PLATE. PRODUCTS ARE NOT LIMITED TO SIKA-Icosit ® BUT SHALL LIMIT ELECTRICAL CURRENT AS MUCH OR MORE.

NOTES:
1. BASE PLATE THICKNESS IS THE FINAL MILLED THICKNESS. BASE PLATES LESS THAN OR EQUAL TO 2" IN THICKNESS ARE NOT REQUIRED TO BE MILLED. BASE PLATES BETWEEN 2" AND 4" IN THICKNESS CAN BE STRAIGHTENED BY PRESSING OR MILLING. MILLED BASE PLATES SHALL MEET THE FLATNESS TOLERANCES OF ASTM A6.
2. BASE PLATE BOLT HOLE DIA. = BOLT DIA. + 5/16"

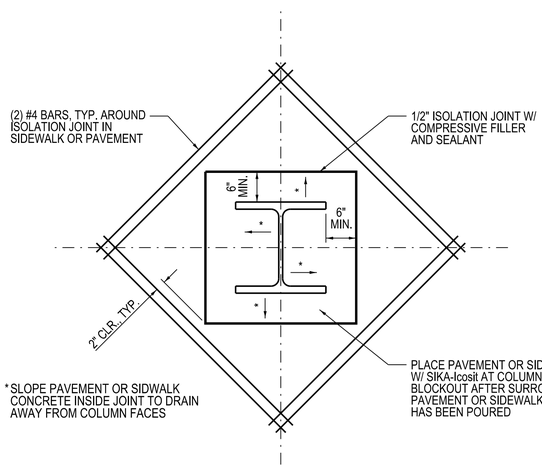

10 COLUMN ISOLATION JOINT DETAIL
N.T.S.

DESIGN BY:	ESS									
DRAWN BY:	ESS									
CHECKED BY:	WJC									
APPROVED BY:	MDS	4	7/3/2023	ISSUED FOR BID						
CDOT/APPROVED BY:		NO.	DATE	REVISIONS	DES.	DRW.	CHK.	DCCO	CDOT	

TRANSYSTEMS
222 SOUTH RIVERSIDE PLAZA SUITE 610
CHICAGO, ILLINOIS 60606

SKIDMORE, OWINGS & MERRILL LLP
224 SOUTH MICHIGAN AVENUE, SUITE 1000
CHICAGO, ILLINOIS 60604

CHICAGO DEPARTMENT OF TRANSPORTATION
DIVISION OF ENGINEERING

STATE / LAKE LOOP ELEVATED STATION
200 NORTH STATE STREET, CHICAGO, IL 60601

BENT COLUMN BASE PLATE DETAILS

CDOT PROJECT D-1-209

DATE: 7/3/2023

SPEC. NO.

DRAWING NO. S-520

REVISION NO.

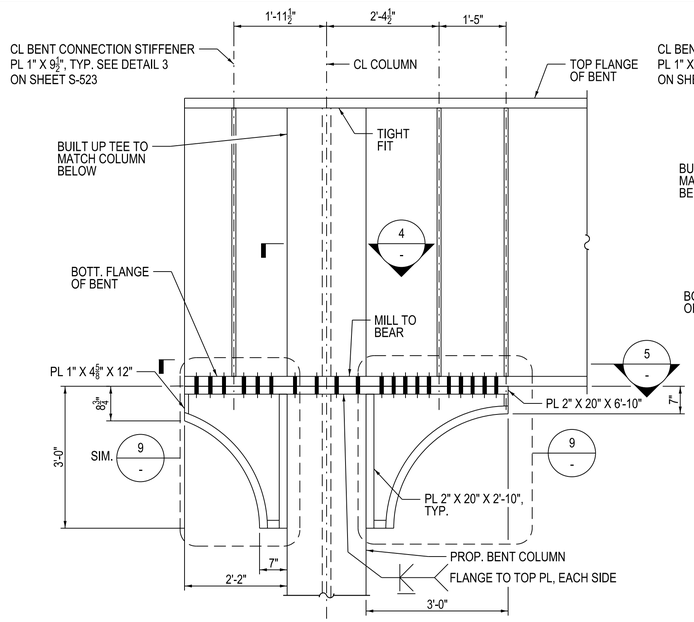

1 CONNECTION - TYPE 1

5/8" = 1'-0" (4 LOCATIONS)

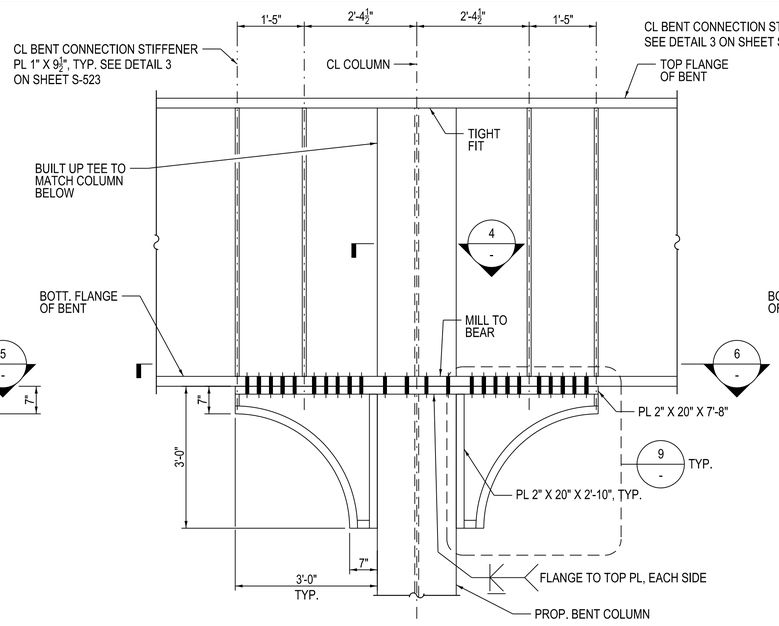

2 CONNECTION - TYPE 2

5/8" = 1'-0" (10 LOCATIONS)

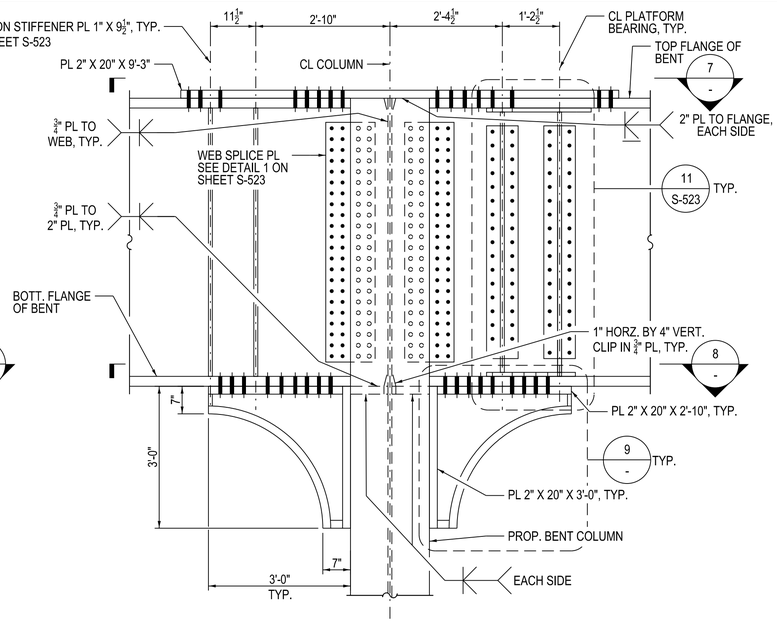

3 CONNECTION - TYPE 3

5/8" = 1'-0" (2 LOCATIONS)

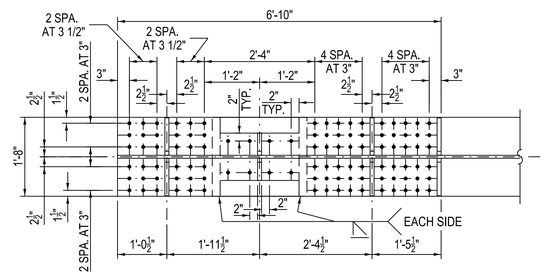

5 SECTION - TYPE 1

5/8" = 1'-0"

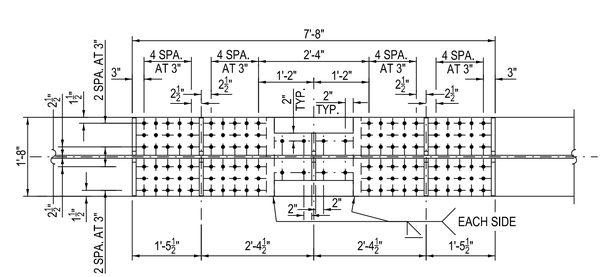

6 SECTION - TYPE 2

5/8" = 1'-0"

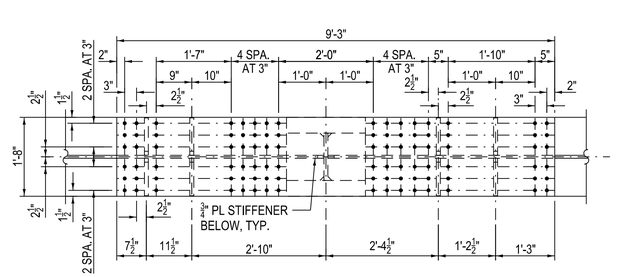

7 SECTION - TYPE 3

5/8" = 1'-0"

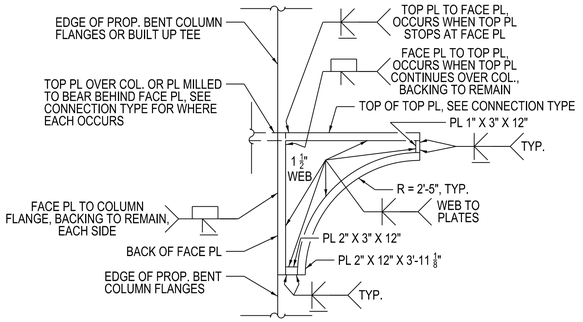

NOTES:

1. ALL BOLTS SHALL BE SPACED TO MISS INTERMEDIATE STIFFENERS, PLATFORM BEARINGS, TRACK STRINGERS, OR ANY OTHER ELEMENT CONNECTING INTO THE BENT GIRDER.
2. BOLTS IN CONNECTION TYPES 1 AND 2 SHALL BE FULLY PRE-TENSIONED TO A MINIMUM OF 39 KIPS IN ADDITION TO THE SLIP-CRITICAL CONNECTION REQUIREMENTS.

9 CORBEL DETAIL

5/8" = 1'-0"

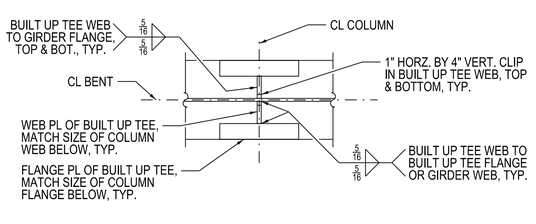

4 SECTION

NTS

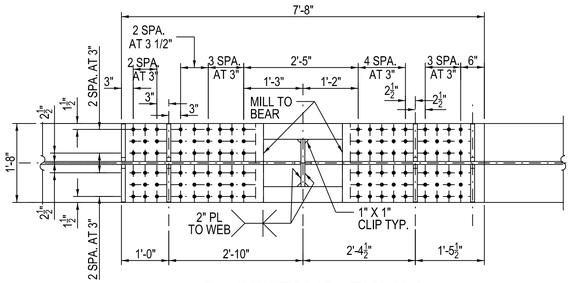

8 SECTION - TYPE 3

5/8" = 1'-0"

DESIGN BY:	CMG								
DRAWN BY:	CMG								
CHECKED BY:	WJC								
APPROVED BY:	WJC	4	7/3/2023	ISSUED FOR BID					
CDOT/APPROVED BY:		NO.	DATE	REVISIONS	DES.	DRW.	CHK.	DCCO	CDOT

TRANSYSTEMS
222 SOUTH RIVERSIDE PLAZA SUITE 610
CHICAGO, ILLINOIS 60606

SKIDMORE, OWINGS & MERRILL LLP
224 SOUTH MICHIGAN AVENUE, SUITE 1000
CHICAGO, ILLINOIS 60604

CHICAGO DEPARTMENT OF TRANSPORTATION
DIVISION OF ENGINEERING

STATE / LAKE LOOP ELEVATED STATION
200 NORTH STATE STREET, CHICAGO, IL 60601

BENT GIRDER DETAILS 1

SPEC. NO.

DRAWING NO. S-521

CDOT PROJECT D-1-209

DATE: 7/3/2023

REVISION NO.

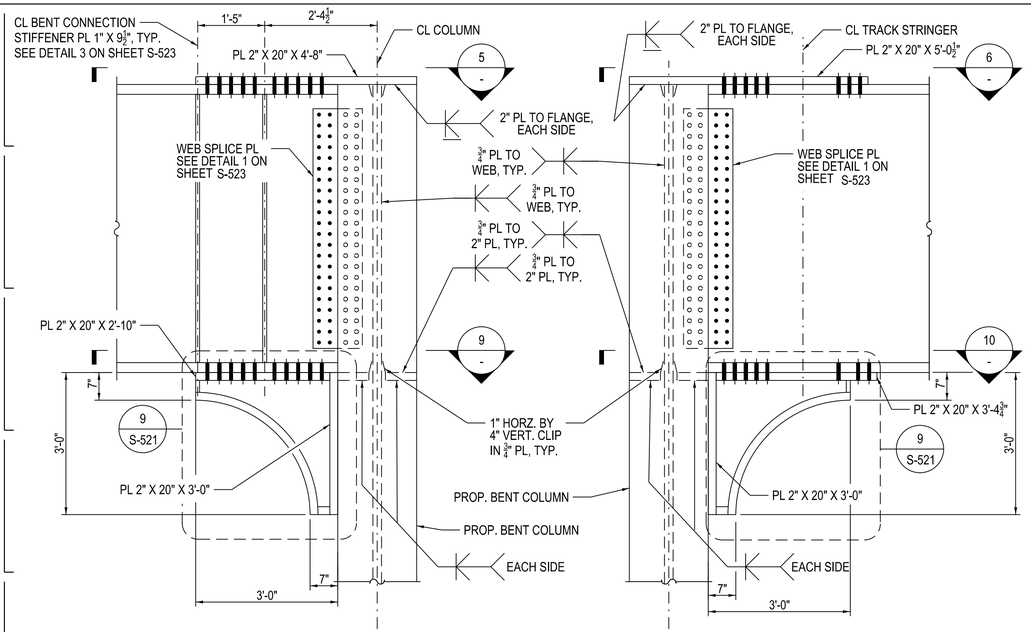

1 CONNECTION - TYPE 4

5/8" = 1'-0" (1 LOCATION)

2 CONNECTION - TYPE 5

5/8" = 1'-0" (1 LOCATION)

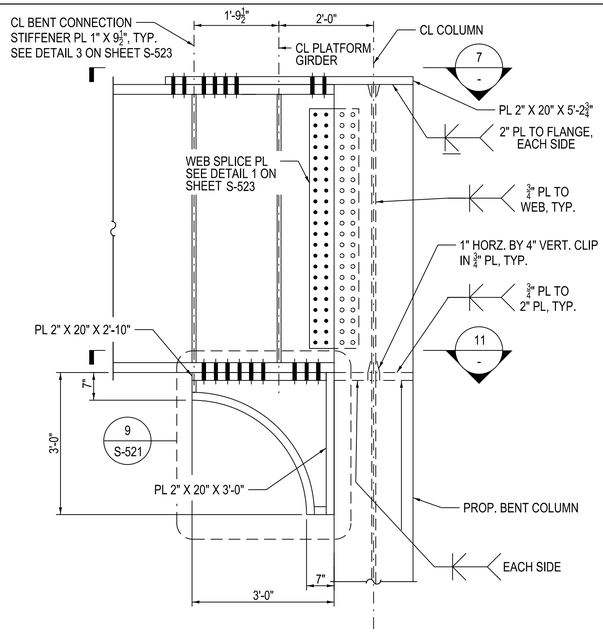

3 CONNECTION - TYPE 6

5/8" = 1'-0" (1 LOCATION)

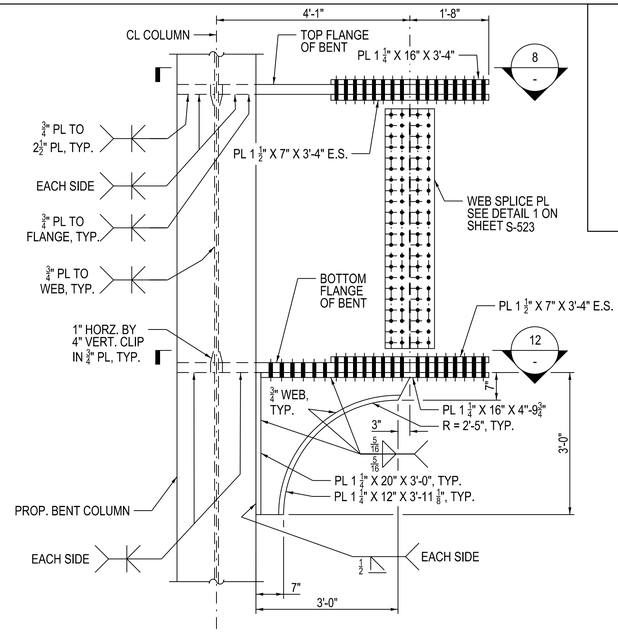

4 CONNECTION - BENT 450

5/8" = 1'-0" (2 LOCATIONS)

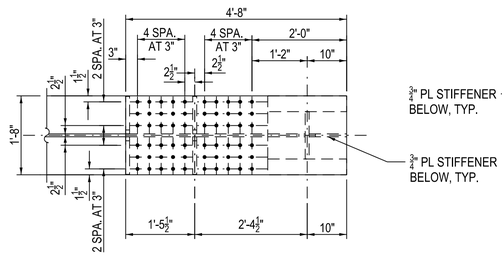

5 SECTION - TYPE 4

5/8" = 1'-0"

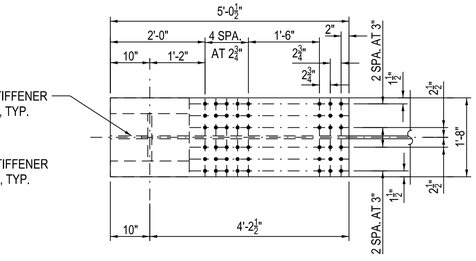

6 SECTION - TYPE 5

5/8" = 1'-0"

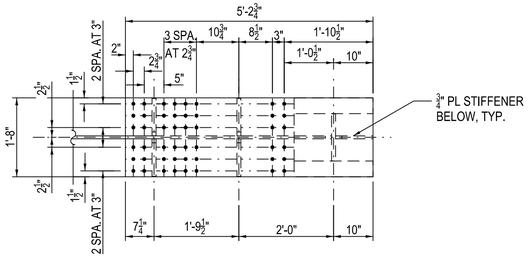

7 SECTION - TYPE 6

5/8" = 1'-0"

NOTES:

1. ALL BOLTS SHALL BE SPACED TO MISS INTERMEDIATE STIFFENERS, PLATFORM BEARINGS, TRACK STRINGERS, OR ANY OTHER ELEMENT CONNECTING INTO THE BENT GIRDER

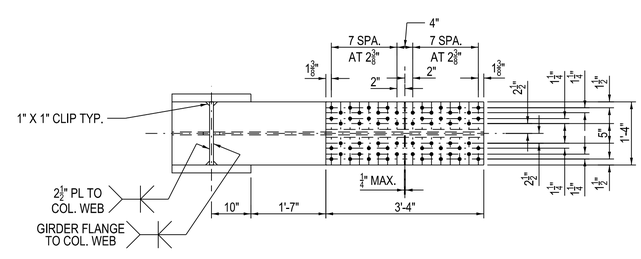

8 SECTION - BENT 450

5/8" = 1'-0"

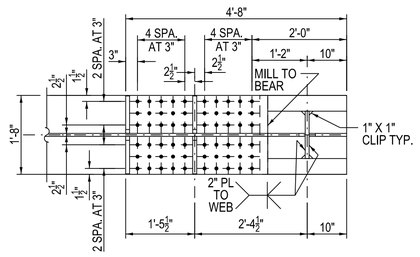

9 SECTION - TYPE 4

5/8" = 1'-0"

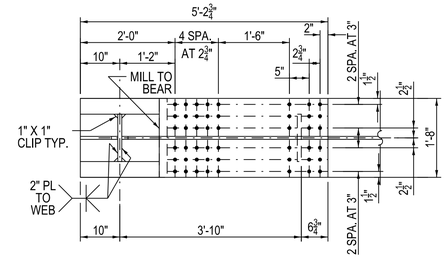

10 SECTION - TYPE 5

5/8" = 1'-0"

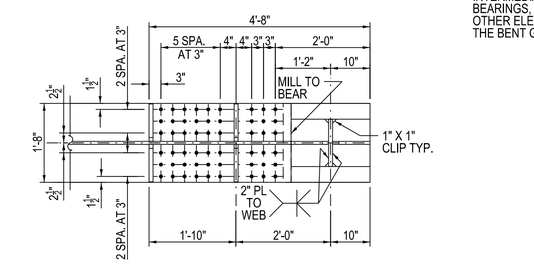

11 SECTION - TYPE 6

5/8" = 1'-0"

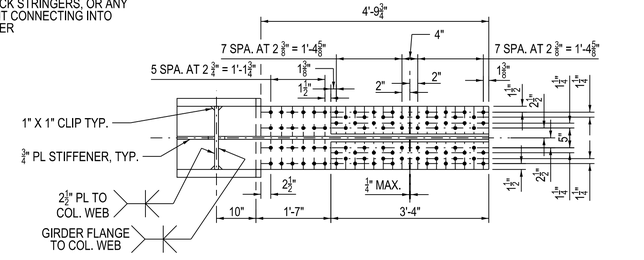

12 SECTION - BENT 450

5/8" = 1'-0"

DESIGN BY:	CMG								
DRAWN BY:	CMG								
CHECKED BY:	WJC								
APPROVED BY:	WJC	4	7/3/2023	ISSUED FOR BID					
CDOT/APPROVED BY:		NO.	DATE	REVISIONS	DES.	DRW.	CHK.	DCCO	CDOT

TRANSYSTEMS
222 SOUTH RIVERSIDE PLAZA SUITE 610
CHICAGO, ILLINOIS 60606

SKIDMORE, OWINGS & MERRILL LLP
224 SOUTH MICHIGAN AVENUE, SUITE 1000
CHICAGO, ILLINOIS 60604

CHICAGO DEPARTMENT OF TRANSPORTATION
DIVISION OF ENGINEERING

STATE / LAKE LOOP ELEVATED STATION
200 NORTH STATE STREET, CHICAGO, IL 60601

BENT GIRDER DETAILS 2

CDOT PROJECT D-1-209

DATE: 7/3/2023

SPEC. NO.

DRAWING NO. S-522

REVISION NO.

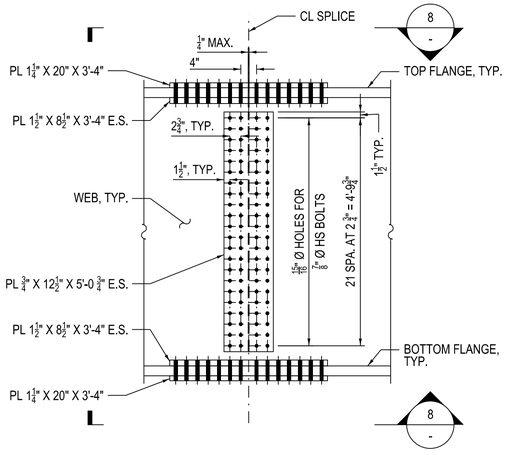

1 BENT FIELD SPLICE DETAIL
5/8" = 1'-0"

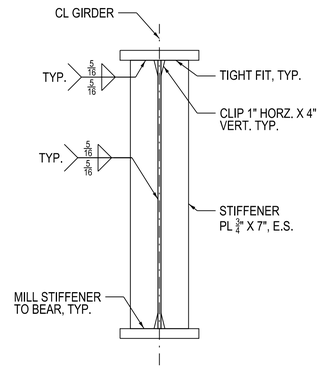

2 BENT STIFFENER DETAIL
5/8" = 1'-0"

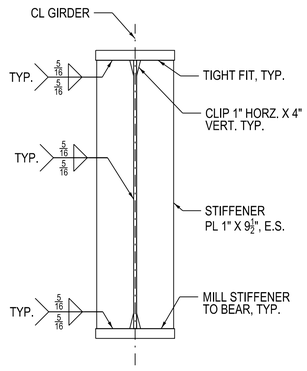

3 BENT CONNECTION STIFFENER DETAIL
5/8" = 1'-0"

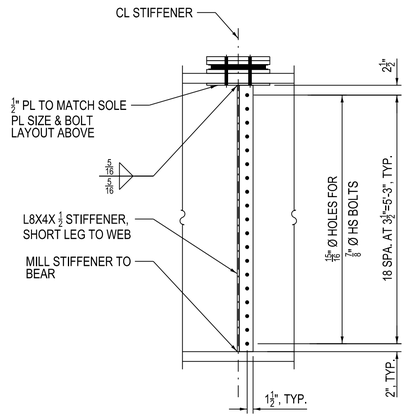

4 BOLTED BENT STIFFENER DETAIL
5/8" = 1'-0"

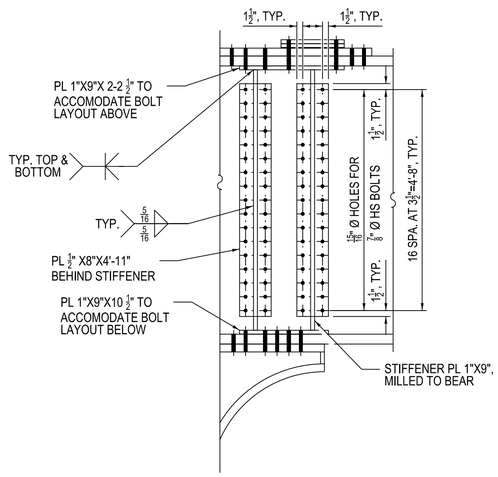

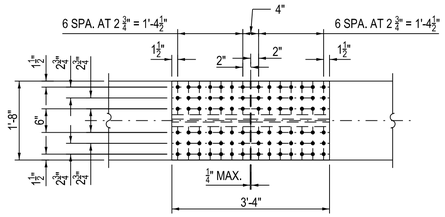

8 SECTION - SPLICE
5/8" = 1'-0"

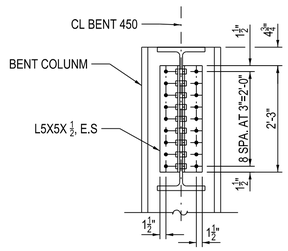

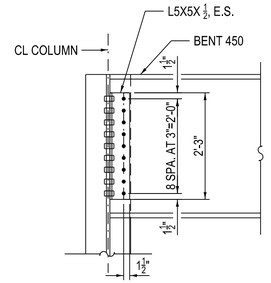

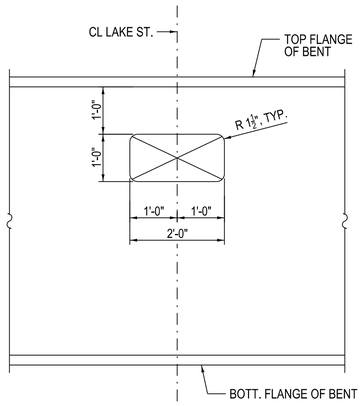

5 BENT OPENING - TYPE 1
5/8" = 1'-0" (9 LOCATIONS)

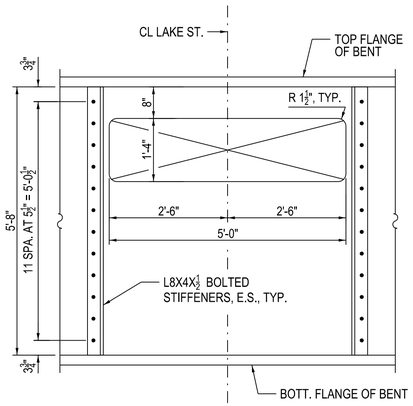

6 BENT OPENING - TYPE 2
5/8" = 1'-0" (2 LOCATIONS)

9 BENT 450 BEAM CONNECTION SECTION
5/8" = 1'-0"

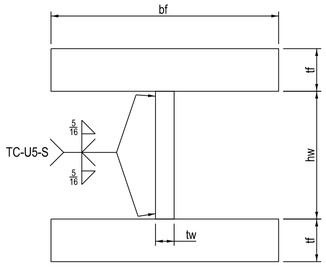

BUP COLUMN SCHEDULE				
COLUMN	tf (in.)	bf (in.)	tw (in.)	hw (in.)
C-T1	2	20	1	16
C-T2	3	20	1	14
C-T3	4	20	1	12

7 BUP COLUMN SCHEDULE
5/8" = 1'-0"

10 BENT 450 BEAM CONNECTION
5/8" = 1'-0"

11 BENT 451 BOLTED STIFFENERS
5/8" = 1'-0"

NOTES:
1. ALL BOLTS SHALL BE SPACED TO MISS INTERMEDIATE STIFFENERS, PLATFORM BEARINGS, TRACK STRINGERS, OR ANY OTHER ELEMENT CONNECTING INTO THE BENT GIRDER

DESIGN BY:	CMG									
DRAWN BY:	CMG									
CHECKED BY:	WJC									
APPROVED BY:	WJC	4	7/3/2023	ISSUED FOR BID						
CDOT/APPROVED BY:		NO.	DATE	REVISIONS	DES.	DRW.	CHK.	DCCO	CDOT	

TRANSYSTEMS
222 SOUTH RIVERSIDE PLAZA SUITE 610
CHICAGO, ILLINOIS 60606

SKIDMORE, OWINGS & MERRILL LLP
224 SOUTH MICHIGAN AVENUE, SUITE 1000
CHICAGO, ILLINOIS 60604

CHICAGO DEPARTMENT OF TRANSPORTATION
DIVISION OF ENGINEERING

STATE / LAKE LOOP ELEVATED STATION
200 NORTH STATE STREET, CHICAGO, IL 60601

BENT GIRDER DETAILS 3

CDOT PROJECT D-1-209 | DATE: 7/3/2023

SPEC. NO.

DRAWING NO. S-523

REVISION NO.

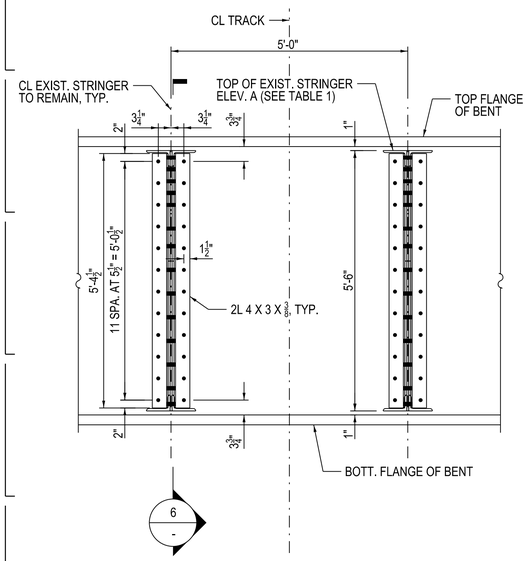

1 STRINGER CONN. - FIX-FIX (TYP)
5/8" = 1'-0"

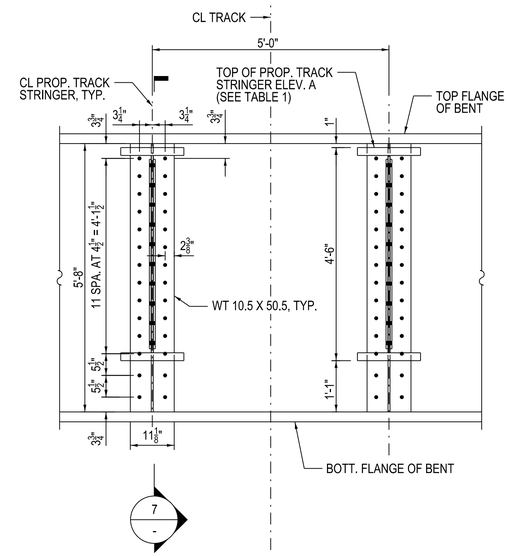

2 STRINGER CONN. - FIX-FIX (STATE - FRONT)
5/8" = 1'-0"

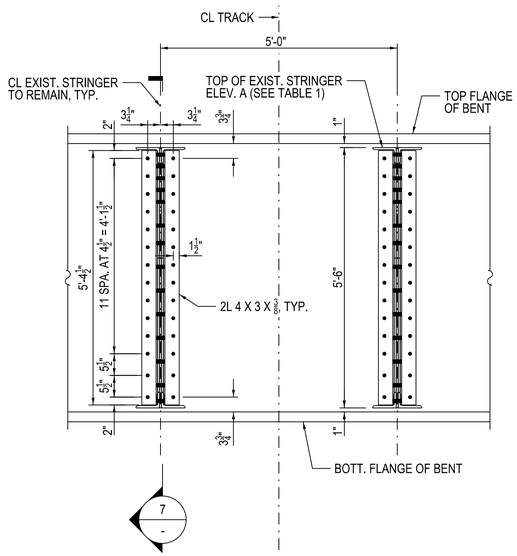

3 STRINGER CONN. - FIX-FIX (STATE - BACK)
5/8" = 1'-0"

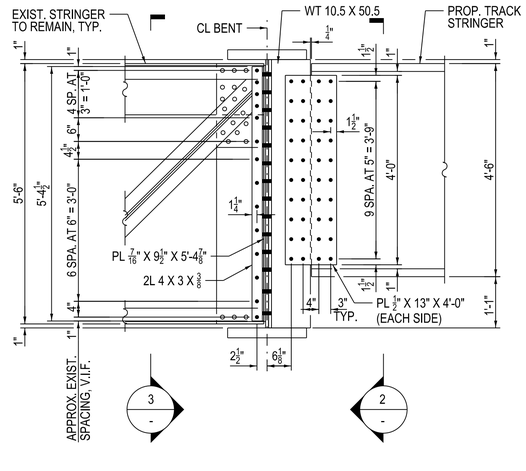

7 STRINGER CONN. - FIX-FIX (STATE)
5/8" = 1'-0"

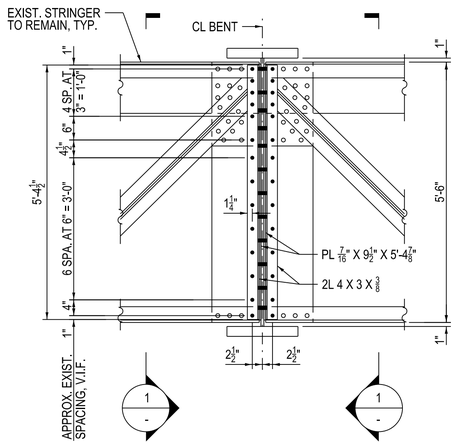

6 STRINGER CONN. - FIX-FIX (TYP)
5/8" = 1'-0"

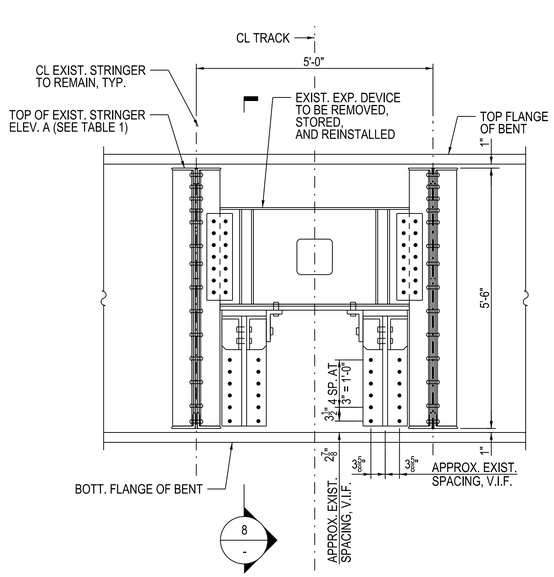

4 STRINGER CONN. - FIX-EXP (FRONT)
5/8" = 1'-0"

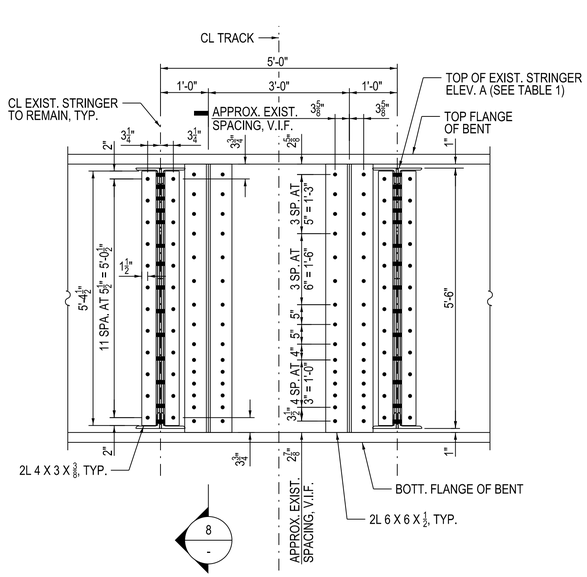

5 STRINGER CONN. - FIX-EXP (BACK)
5/8" = 1'-0"

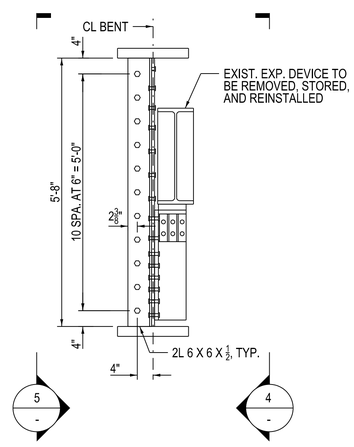

8 STRINGER CONN. - FIX-EXP
5/8" = 1'-0"

TABLE 1	
BENT	ELEVATION A
442	34.26
443	34.26
444	34.25
445	34.25
446	34.24
447	34.24
449	34.23
450	34.22
451	34.22
452	34.21
453	34.21

NOTES:
1. ALL STEEL SHAPES CALLED OUT ON THIS SHEET ARE PROPOSED AND SHALL BE NEW STEEL U.N.O.
2. PROPOSED STEEL ON THIS SHEET IS TO REPLACE EXISTING STEEL SHAPES WHERE THEIR LOCATIONS ARE THE SAME.
3. DOUBLE ANGLES (2L) CALLED UT ON THIS SHEET ARE TO BE SHORT LEGS BACK-TO-BACK (SLBB) U.N.O.

DESIGN BY:	ESS								
DRAWN BY:	ESS								
CHECKED BY:	WJC								
APPROVED BY:	WJC	4	7/3/2023	ISSUED FOR BID					
CDOT/APPROVED BY:		NO.	DATE	REVISIONS	DES.	DRW.	CHK.	DCCO	CDOT

TRANSYSTEMS
222 SOUTH RIVERSIDE PLAZA SUITE 610
CHICAGO, ILLINOIS 60606

SKIDMORE, OWINGS & MERRILL LLP
224 SOUTH MICHIGAN AVENUE, SUITE 1000
CHICAGO, ILLINOIS 60604

CHICAGO DEPARTMENT OF TRANSPORTATION
DIVISION OF ENGINEERING

STATE / LAKE LOOP ELEVATED STATION
200 NORTH STATE STREET, CHICAGO, IL 60601

BENT GIRDER TO TRACK STRINGER CONNECTION DETAILS

SPEC. NO.

DRAWING NO. S-524

CDOT PROJECT D-1-209

DATE: 7/3/2023

REVISION NO.

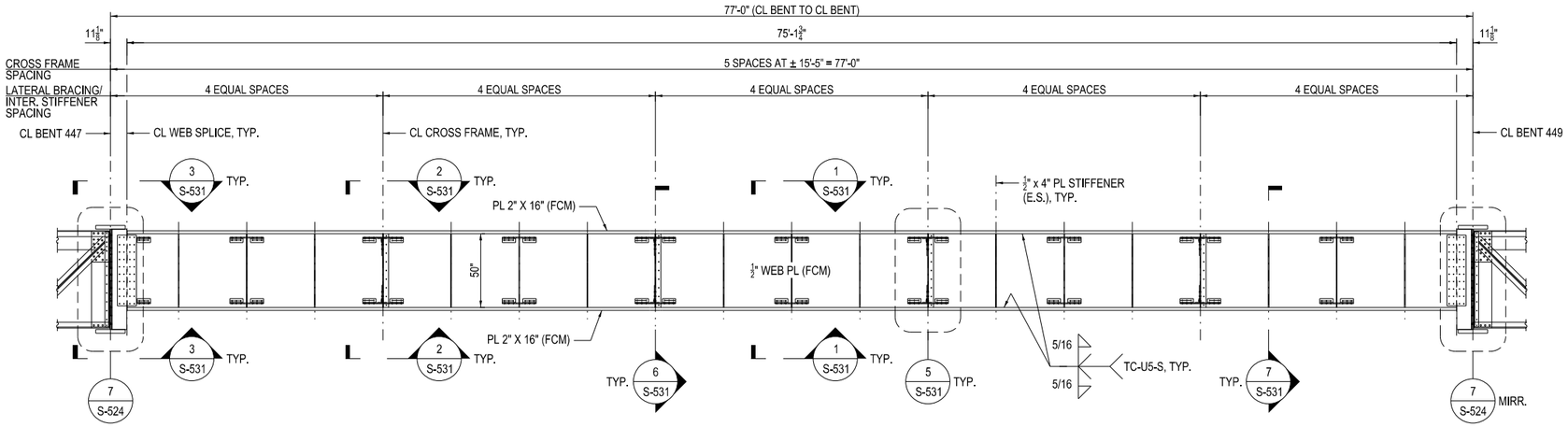

1 ELEVATION VIEW - PROP. TRACK STRINGER (FCM)

1/4" = 1'-0" (LOOKING NORTH - INTERIOR STRINGER SHOWN, EXTERIOR STRINGER SIMILAR)

NOTES:

1. THE CONTRACTOR SHALL PROCURE AT THEIR OWN EXPENSE AND RETAIN ON-SITE AT ALL TIME PERIODS WHERE WORK IS ONGOING THAT REQUIRES INTERRUPTION OR REROUTING OF CTA SERVICE, ADDITIONAL STEEL PLATES AND SHAPES FOR CONNECTIONS MATCHING THE PROPOSED SHAPES CALLED OUT ON S-330 AND S-524 IN EXCESS OF WHAT IS REQUIRED PER PLANS. ADDITIONAL STEEL PLATES AND SHAPES SHALL HAVE MATERIAL PROPERTIES MATCHING THOSE OUTLINED ON S-002 AND SHALL BE CLEAN AND UNCOATED SUCH THAT FIELD MODIFICATIONS, WELDING, OR OTHER PREPARATIONS CAN BE MADE TO THEM. THE AMOUNT OF ADDITIONAL STEEL PLATES AND SHAPES RETAINED SHALL BE SUFFICIENT TO ENSURE THAT INTERRUPTIONS OR REROUTING OF CTA SERVICE IS NOT PROLONGED. AFTER ERECTION, ANY ADDITIONAL STEEL PLATES OR SHAPES USED FOR FIELD MODIFICATIONS, REPLACEMENTS OR REPAIRS SHALL BE COATED AND PAINTED SUCH THAT THEY WILL THEN PROVIDE PROTECTION SIMILAR TO THE SYSTEMS DENOTED FOR THE ORIGINAL STEEL MEMBERS PER PLANS. THE MEANS AND METHODS OF WHICH SHALL BE SUBMITTED BY THE CONTRACTOR TO THE COMMISSIONER FOR APPROVAL. ANY DEVIATIONS FROM PLANS AND SPECIFICATIONS, FIELD MODIFICATIONS, REPLACEMENTS OR REPAIRS MADE SHALL FOLLOW THE PROCEDURE FOR USE AND APPROVALS AS NOTED THROUGHOUT S-002.

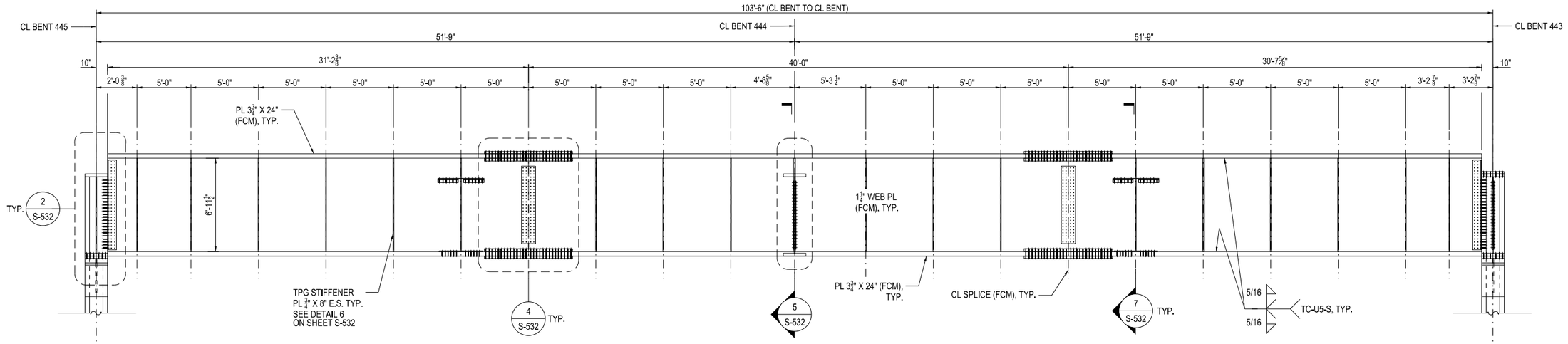

2 ELEVATION VIEW - PROP. THRU PLATE GIRDER (FCM)

1/4" = 1'-0" (LOOKING SOUTH)

DESIGN BY:	WJC	CMG								
DRAWN BY:	CMG									
CHECKED BY:	WJC									
APPROVED BY:	MDS	4	7/3/2023	ISSUED FOR BID						
CDOT/APPROVED BY:		NO.	DATE	REVISIONS	DES.	DRW.	CHK.	DCCO	CDOT	

TRANSYSTEMS
222 SOUTH RIVERSIDE PLAZA SUITE 610
CHICAGO, ILLINOIS 60606

SKIDMORE, OWINGS & MERRILL LLP
224 SOUTH MICHIGAN AVENUE, SUITE 1000
CHICAGO, ILLINOIS 60604

CHICAGO DEPARTMENT OF TRANSPORTATION
DIVISION OF ENGINEERING

STATE / LAKE LOOP ELEVATED STATION

SPEC. NO.

TRACK STRINGER & THRU PLATE GIRDER ELEVATIONS

DRAWING NO. S-530

CDOT PROJECT D-1-209

DATE: 7/3/2023

REVISION NO.

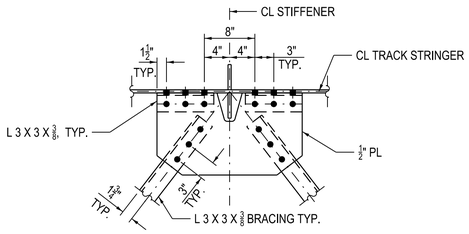

1 TYPICAL TRACK STRINGER LATERAL BRACING CONNECTION

1" = 1'-0"

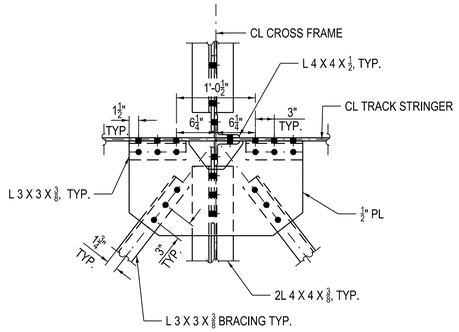

2 TRACK STRINGER LATERAL BRACING CONNECTION AT CROSS FRAME

1" = 1'-0"

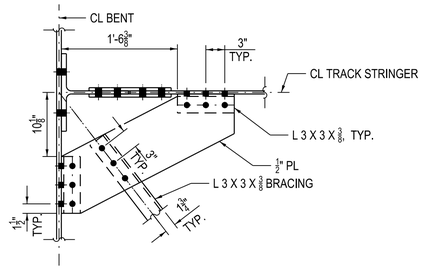

3 TRACK STRINGER LATERAL BRACING CONNECTION AT BENT

1" = 1'-0"

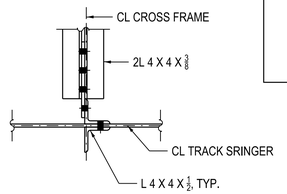

4 CROSS FRAME CONNECTION TO TRACK STRINGER

1" = 1'-0"

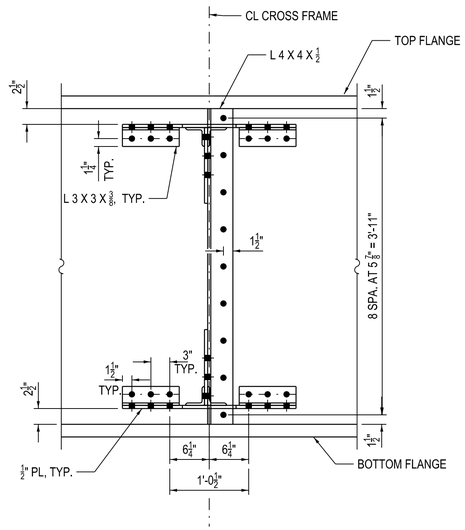

5 CROSS FRAME CONNECTION

1" = 1'-0"

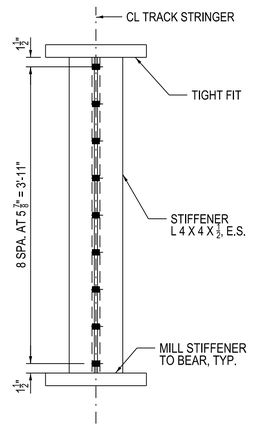

6 SECTION THRU CROSS FRAME STIFFENER

1" = 1'-0"

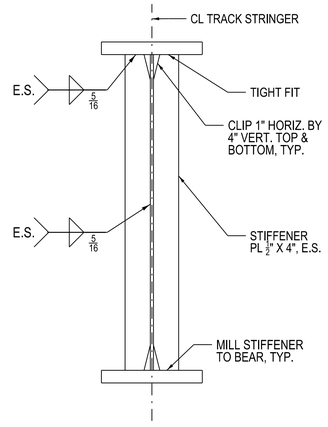

7 SECTION THRU INTERMEDIATE STIFFENER

1" = 1'-0"

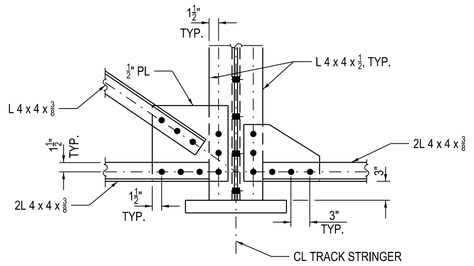

8 CROSS FRAME GUSSET PLATE DETAIL

1" = 1'-0"

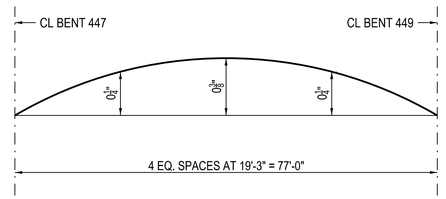

9 TRACK STRINGER CAMBER DIAGRAM

NTS

DESIGN BY:	WJC									
DRAWN BY:	WJC									
CHECKED BY:	MDS									
APPROVED BY:	MDS	4	7/3/2023	ISSUED FOR BID						
CDOT/APPROVED BY:		NO.	DATE	REVISIONS	DES.	DRW.	CHK.	DCCO	CDOT	

TRANSYSTEMS
222 SOUTH RIVERSIDE PLAZA SUITE 610
CHICAGO, ILLINOIS 60606

SKIDMORE, OWINGS & MERRILL LLP
224 SOUTH MICHIGAN AVENUE, SUITE 1000
CHICAGO, ILLINOIS 60604

CHICAGO DEPARTMENT OF TRANSPORTATION
DIVISION OF ENGINEERING

STATE / LAKE LOOP ELEVATED STATION
200 NORTH STATE STREET, CHICAGO, IL 60601

TRACK STRINGER DETAILS

CDOT PROJECT D-1-209 | DATE: 7/3/2023

SPEC. NO.

DRAWING NO. S-531

REVISION NO.

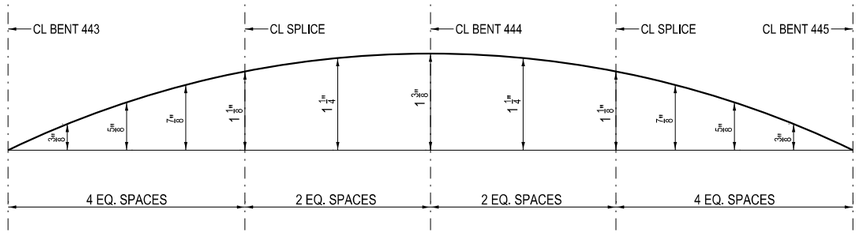

1 TPG CAMBER DIAGRAM
NTS

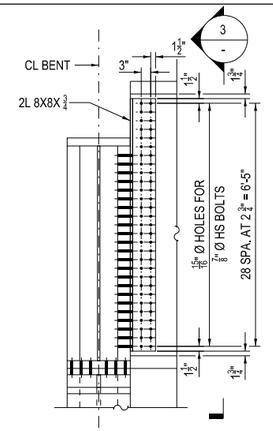

2 COLUMN CONNECTION
1/2" = 1'-0"

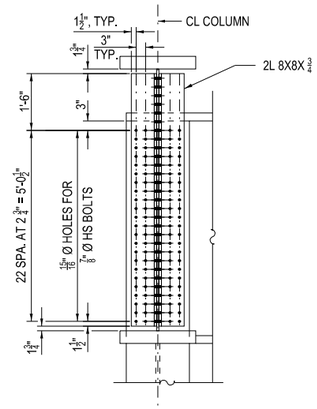

3 COLUMN CONNECTION SECTION
1/2" = 1'-0"

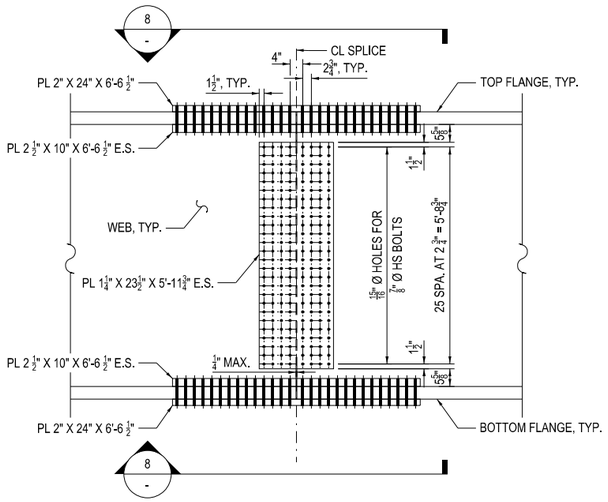

4 SPLICE CONNECTION
1/2" = 1'-0"

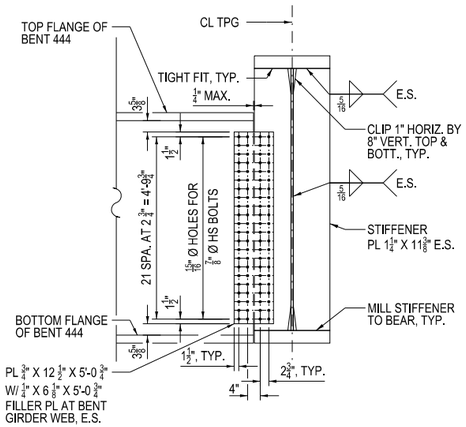

5 BENT GIRDER CONNECTION SECTION
1/2" = 1'-0"

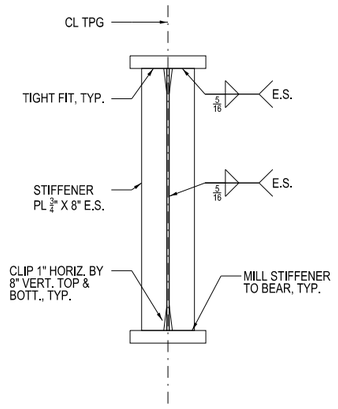

6 TPG STIFFENER DETAIL
1/2" = 1'-0"

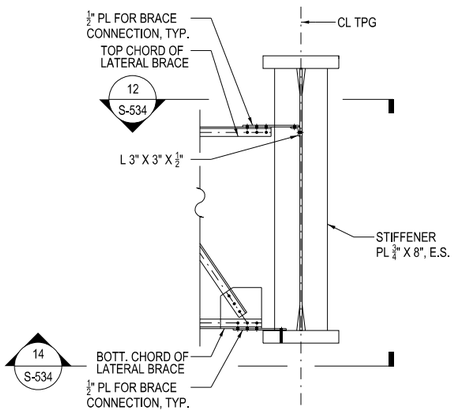

7 LATERAL BRACING CONNECTION SECTION
1/2" = 1'-0"

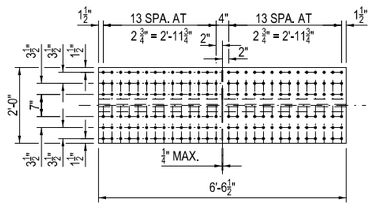

8 SPLICE CONNECTION DETAIL
1/2" = 1'-0"

DESIGN BY:	CMG									
DRAWN BY:	CMG									
CHECKED BY:	WJC									
APPROVED BY:	WJC	4	7/3/2023	ISSUED FOR BID						
CDOT/APPROVED BY:		NO.	DATE	REVISIONS	DES.	DRW.	CHK.	DCCO	CDOT	

TRANSYSTEMS
222 SOUTH RIVERSIDE PLAZA SUITE 610
CHICAGO, ILLINOIS 60606

SKIDMORE, OWINGS & MERRILL LLP
224 SOUTH MICHIGAN AVENUE, SUITE 1000
CHICAGO, ILLINOIS 60604

CHICAGO DEPARTMENT OF TRANSPORTATION
DIVISION OF ENGINEERING

STATE / LAKE LOOP ELEVATED STATION

SPEC. NO.

THRU PLATE GIRDER DETAILS

DRAWING NO. S-532

CDOT PROJECT D-1-209

DATE: 7/3/2023

REVISION NO.

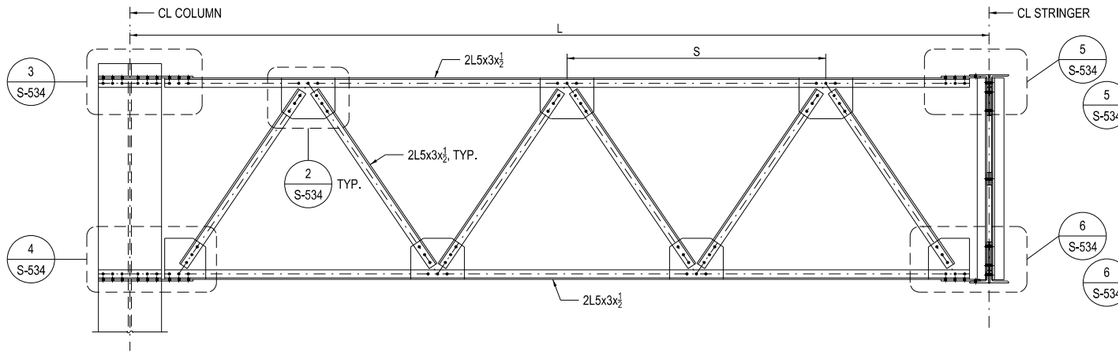

1 LATERAL BRACING ELEVATION (LB-T1)
1/2" = 1'-0" (18 LOCATIONS)

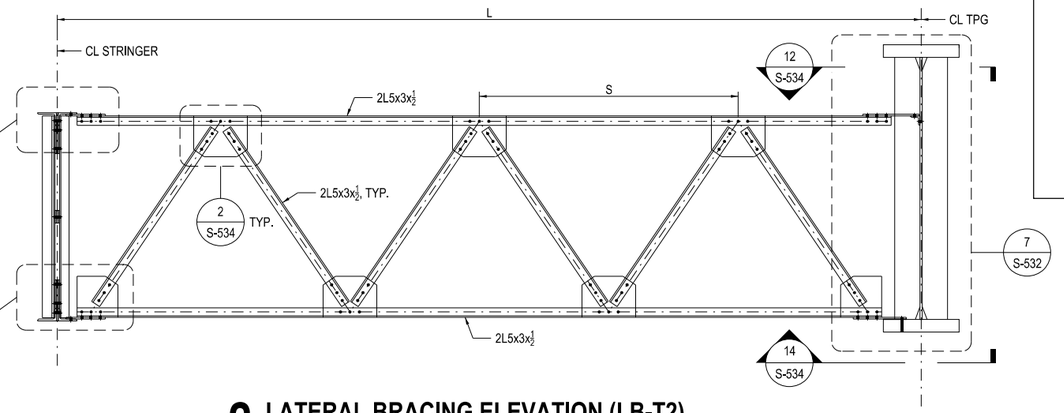

2 LATERAL BRACING ELEVATION (LB-T2)
1/2" = 1'-0" (4 LOCATIONS)

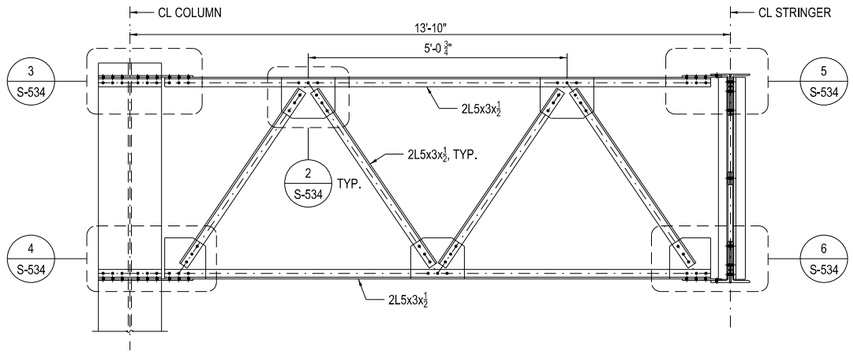

3 LATERAL BRACING ELEVATION (LB-T3)
1/2" = 1'-0" (2 LOCATIONS)

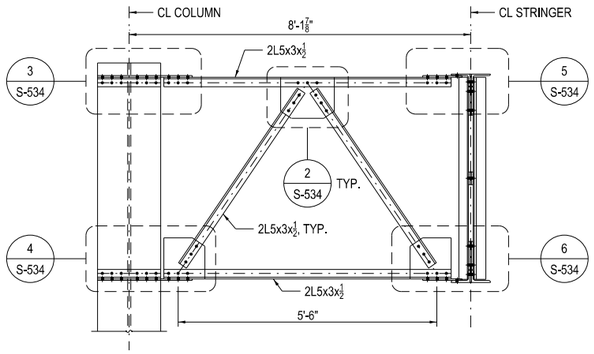

4 LATERAL BRACING ELEVATION (LB-T4)
1/2" = 1'-0" (4 LOCATIONS)

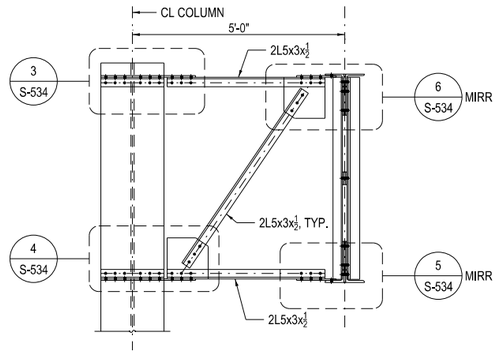

5 LATERAL BRACING ELEVATION (LB-T5)
1/2" = 1'-0" (2 LOCATIONS)

TYPE 1 LATERAL BRACING DIMENSIONS		
NAME	LENGTH, L (FT)	SPACING, S (FT)
442-NW	22.40	7.47
442-SW	23.93	7.98
443-NW	22.40	7.47
443-NE	22.40	7.47
444-NW	22.40	7.47
445-NW	22.40	7.47
445-NE	22.03	7.34
445-SE	23.58	7.86
446-NW	22.03	7.34
446-SW	22.03	7.34
447-NW	19.57	6.52
447-SW	19.57	6.52
449-NE	20.66	6.89
449-SE	20.66	6.89
452-NW	20.20	6.73
452-SW	19.46	6.49
453-SW	19.45	6.48
453-SE	19.48	6.49

TYPE 2 LATERAL BRACING DIMENSIONS		
NAME	LENGTH, L (FT)	SPACING, S (FT)
443-SE	21.80	7.27
444-SW	21.23	7.08
444-SE	20.97	6.99
445-SW	22.08	7.36

DESIGN BY:	ESS									
DRAWN BY:	ESS									
CHECKED BY:	WJC									
APPROVED BY:	WJC	4	7/3/2023	ISSUED FOR BID						
CDOT/APPROVED BY:		NO.	DATE	REVISIONS	DES.	DRW.	CHK.	DCCO	CDOT	

TRANSYSTEMS
222 SOUTH RIVERSIDE PLAZA SUITE 610
CHICAGO, ILLINOIS 60606

SKIDMORE, OWINGS & MERRILL LLP
224 SOUTH MICHIGAN AVENUE, SUITE 1000
CHICAGO, ILLINOIS 60604

CHICAGO DEPARTMENT OF TRANSPORTATION
DIVISION OF ENGINEERING

STATE / LAKE LOOP ELEVATED STATION

SPEC. NO.

LATERAL BRACING DETAILS 1

DRAWING NO. S-533

CDOT PROJECT D-1-209

DATE: 7/3/2023

REVISION NO.

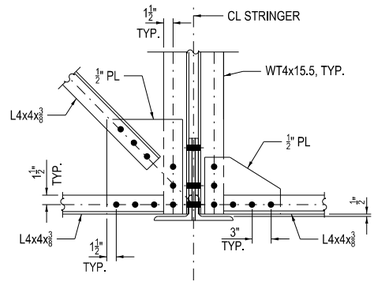

1 CROSS FRAME GUSSET PLATE DETAIL
1" = 1'-0"

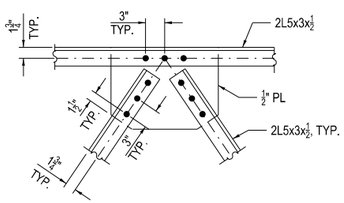

2 LATERAL BRACING GUSSET PLATE DETAIL
1" = 1'-0"

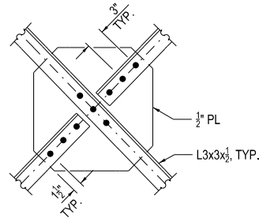

11 CROSS BRACING CENTER CONNECTION
1" = 1'-0"

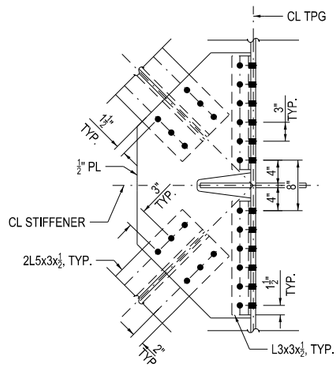

12 LATERAL BRACING SECTION AT THRU PLATE GIRDER (TOP)
1" = 1'-0"

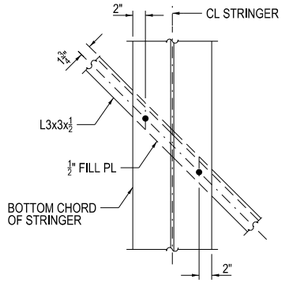

13 CROSS BRACING CONNECTION TO STRINGER
1" = 1'-0"

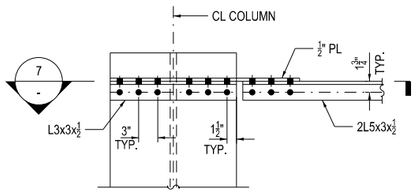

3 LATERAL BRACING TO COLUMN CONNECTION (TOP)
1" = 1'-0"

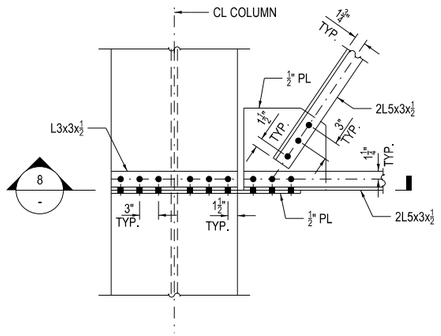

4 LATERAL BRACING TO COLUMN CONNECTION (BOTTOM)
1" = 1'-0"

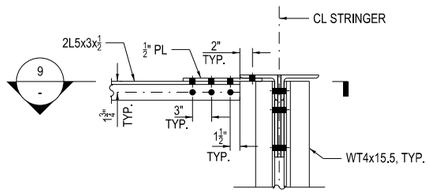

5 LATERAL BRACING TO STRINGER CONNECTION (TOP)
1" = 1'-0"

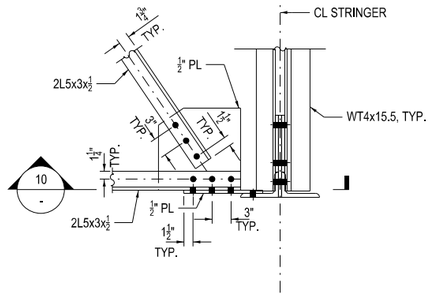

6 LATERAL BRACING TO STRINGER CONNECTION (BOTTOM)
1" = 1'-0"

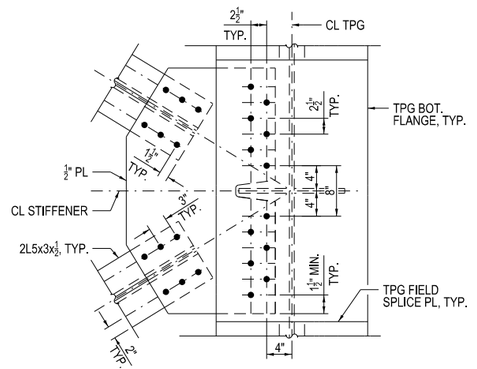

14 LATERAL BRACING SECTION AT THRU PLATE GIRDER (BOTTOM)
1" = 1'-0"

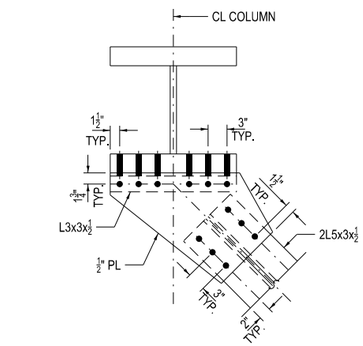

7 SECTION
1" = 1'-0"

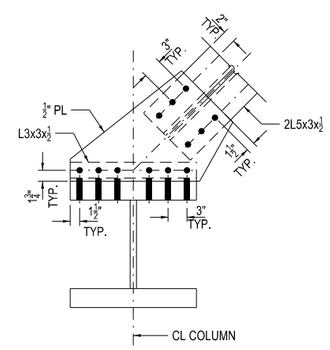

8 SECTION
1" = 1'-0"

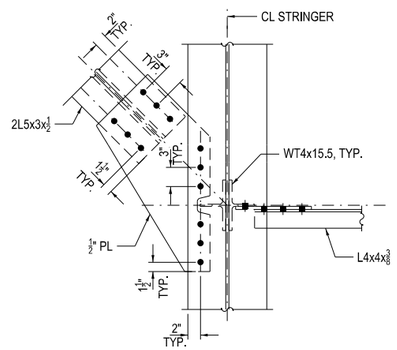

9 SECTION
1" = 1'-0"

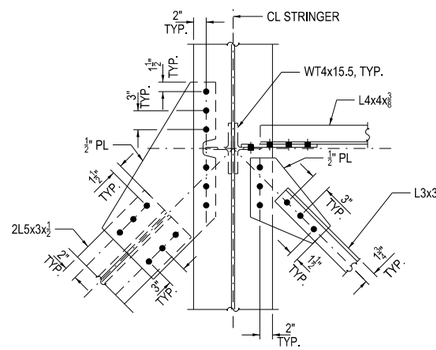

10 SECTION
1" = 1'-0"

NOTES:

1. WHERE VERTICAL WT MEMBERS ARE INDICATED, THEY ARE TO REPLACE EXISTING VERTICAL TEE SHAPES. BOLT HOLE SPACING FOR THE PROPOSED WT SHALL MATCH THE EXISTING, AS VERIFIED IN THE FIELD. WHERE SPACER OR FILLER PLATES ARE CONNECTED TO THE EXISTING VERTICAL TEES, THEY ARE TO BE REPLACED WITH NEW PLATES OF THE SAME THICKNESS AND LENGTH, BUT A WIDTH MATCHING THE PROPOSED VERTICAL WT. BOLT HOLES IN THE NEW FILLER OR SPACER PLATES SHALL MATCH THE EXISTING, AS VERIFIED IN THE FIELD.

DESIGN BY:	WJC									
DRAWN BY:	WJC									
CHECKED BY:	MDS									
APPROVED BY:	MDS	4	7/3/2023	ISSUED FOR BID						
CDOT/APPROVED BY:		NO.	DATE	REVISIONS	DES.	DRW.	CHK.	DCCO	CDOT	

TRANSYSTEMS
222 SOUTH RIVERSIDE PLAZA SUITE 610
CHICAGO, ILLINOIS 60606

SKIDMORE, OWINGS & MERRILL LLP
224 SOUTH MICHIGAN AVENUE, SUITE 1000
CHICAGO, ILLINOIS 60604

CHICAGO DEPARTMENT OF TRANSPORTATION
DIVISION OF ENGINEERING

STATE / LAKE LOOP ELEVATED STATION

SPEC. NO.

LATERAL BRACING DETAILS 2

DRAWING NO. S-534

CDOT PROJECT D-1-209

DATE: 7/3/2023

REVISION NO.

TRACK STRINGER, TPG, AND BENT CROSS GIRDER DESIGN VALUES TABLE												
NOMENCLATURE	TRACK STRINGER (BENT 447-449) MID-SPAN	TPG (BENT 443-445) MID-SPAN	BENT 442		BENT 443		BENT 444		BENT 445		BENT 446	
			MAX. POS. MOMENT	MAX. NEG. MOMENT	MAX. POS. MOMENT	MAX. NEG. MOMENT	MAX. POS. MOMENT	MAX. NEG. MOMENT	MAX. POS. MOMENT	MAX. NEG. MOMENT	MAX. POS. MOMENT	MAX. NEG. MOMENT
STRESS/FATIGUE ANALYSIS												
FCM OR NTR	FCM	FCM	FCM	FCM	FCM	FCM	FCM	FCM	FCM	FCM	FCM	FCM
$I_S (IN^3)$	48,494	403,420	143,960	143,960	143,960	143,960	143,960	143,960	143,960	143,960	143,960	143,960
$S_S (IN^4)$	1,796	8,866	3,944	3,944	3,944	3,944	3,944	3,944	3,944	3,944	3,944	3,944
D.L. (K/FT)	0.681	See Note 1	See Note 1	See Note 1	See Note 1	See Note 1	See Note 1	See Note 1	See Note 1	See Note 1	See Note 1	See Note 1
M.D.L. (K-FT)	504	8,959	1,501	1,169	2,517	2,075	1,762	1,769	2,785	918	1,641	710
+ $M_{L.L.}$ + IM. (K-FT)	1,301	3,894	2,677	483	4,056	688	2,664	773	4,254	900	2,807	735
f_sD.L. (KSI)	3.37	12.13	4.57	3.56	7.66	6.31	5.36	5.38	8.47	2.79	4.99	2.16
$f_{s\,L.L.}$ + IM (KSI)	8.69	5.27	8.15	1.47	12.34	2.09	8.10	2.35	12.94	2.74	8.54	2.24
$f_{s\,L.L.}$ PLATFORM (KSI)	0.00	4.93	1.98	1.69	3.65	3.83	3.08	3.30	4.19	2.77	2.17	1.04
f_s TOTAL (KSI)	12.06	23.98	15.08	5.41	21.89	10.38	15.88	8.81	23.50	4.68	16.09	3.10
f_s ALLOWABLE (KSI)	27.50	27.50	27.50	27.50	27.50	27.50	27.50	27.50	27.50	27.50	27.50	27.50
FATIGUE CATEGORY (S_{Rfat})	C' (12.0)	C' (13.0)	B (18.0)	B (18.0)	B (18.0)	B (18.0)	B (18.0)	C' (13.0)	B (18.0)	C' (13.0)	B (18.0)	C' (13.0)
f_s RANGE (KSI)	6.50	5.81	8.24	0.97	12.17	2.17	8.97	0.59	13.45	1.71	6.52	0.67
+ $M_{CRANE\ L.L.}$ + IM. (K-FT)	1,898	5,115	4,697	1,223	6,722	2,154	4,889	1,810	6,844	1,209	4,862	737
$f_{s\,CRANE\ L.L.}$ + IM (KSI)	12.68	6.92	9.72	3.72	12.79	6.55	9.51	5.51	12.35	3.68	9.80	2.24
f_s RATING (KSI)	27.50	27.50	27.50	27.50	27.50	27.50	27.50	27.50	27.50	27.50	27.50	27.50
MAXIMUM RATING	1.90	2.22	2.36	6.44	1.55	3.23	2.33	4.02	1.54	6.72	2.30	11.30

TRACK STRINGER, TPG, AND BENT CROSS GIRDER DESIGN VALUES TABLE (CONT.)												
NOMENCLATURE	BENT 447		BENT 449		BENT 450		BENT 451		BENT 452		BENT 453	
	MAX. POS. MOMENT	MAX. NEG. MOMENT	MAX. POS. MOMENT	MAX. NEG. MOMENT	MAX. POS. MOMENT	MAX. NEG. MOMENT	MAX. POS. MOMENT	MAX. NEG. MOMENT	MAX. POS. MOMENT	MAX. NEG. MOMENT	MAX. POS. MOMENT	MAX. NEG. MOMENT
STRESS/FATIGUE ANALYSIS												
FCM OR NTR	FCM	FCM	FCM	FCM	FCM	FCM	FCM	FCM	FCM	FCM	FCM	FCM
$I_S (IN^3)$	143,960	143,960	143,960	143,960	119,099	119,099	143,960	143,960	143,960	143,960	143,960	143,960
$S_S (IN^4)$	3,944	3,944	3,944	3,944	3,263	3,263	3,944	3,944	3,944	3,944	3,944	3,944
D.L. (K/FT)	See Note 1	See Note 1	See Note 1	See Note 1	See Note 1	See Note 1	See Note 1	See Note 1	See Note 1	See Note 1	See Note 1	See Note 1
M.D.L. (K-FT)	997	1,869	855	1,880	1,274	190	2,070	2,172	1,308	1,371	932	997
+ $M_{L.L.}$ + IM. (K-FT)	4,458	1,180	4,180	952	1,708	318	1,773	248	2,004	401	2,159	501
f_sD.L. (KSI)	3.03	5.69	2.60	5.72	4.68	0.70	6.30	6.61	3.98	4.17	2.84	3.03
$f_{s\,L.L.}$ + IM (KSI)	13.56	3.59	12.72	2.90	6.28	1.17	5.39	0.75	6.10	1.22	6.57	1.52
$f_{s\,L.L.}$ PLATFORM (KSI)	0.78	2.87	0.81	2.90	1.90	0.88	3.99	4.18	2.47	2.59	1.38	1.47
f_s TOTAL (KSI)	20.09	11.15	19.70	11.02	11.83	2.54	10.29	10.79	10.41	6.83	10.30	4.55
f_s ALLOWABLE (KSI)	27.50	27.50	27.50	27.50	27.50	27.50	27.50	27.50	27.50	27.50	27.50	27.50
FATIGUE CATEGORY (S_{Rfat})	B (18.0)	B (18.0)	B (18.0)	B (18.0)	B (18.0)	B (18.0)	B (18.0)	C' (13.0)	B (18.0)	C' (13.0)	B (18.0)	C' (13.0)
f_s RANGE (KSI)	14.61	0.60	13.30	0.59	6.39	0.60	5.28	0.19	6.28	0.48	5.18	0.17
+ $M_{CRANE\ L.L.}$ + IM. (K-FT)	5,735	2,040	5,366	2,045	3,069	351	2,070	2,172	3,420	1,392	3,297	1,015
$f_{s\,CRANE\ L.L.}$ + IM (KSI)	14.42	6.21	13.73	6.22	6.60	1.29	6.30	6.61	6.43	4.23	7.20	3.09
f_s RATING (KSI)	27.50	27.50	27.50	27.50	27.50	27.50	27.50	27.50	27.50	27.50	27.50	27.50
MAXIMUM RATING	1.70	3.51	1.81	3.50	3.45	20.77	3.37	3.16	3.66	5.51	3.43	7.92

NOTES:

1. AS A RESULT OF CARRYING THE STATION STRUCTURES WITH VARYING GEOMETRY AND LOADS, DL CANNOT BE GIVEN ON A PER FOOT BASIS.
2. TOTAL MAXIMUM STRESS IS THE LEAST FAVORABLE STRESS COMPUTED FROM ALL LOAD COMBINATIONS APPLIED TO THE BENT.

TRACK STRINGER, TPG, AND BENT CROSS GIRDER DESIGN DATA NOTES:

1. I_S, S_S: NON-COMPOSITE MOMENT OF INTERTIA AND SECTION MODULUS OF THE STEEL SECTION USED FOR COMPUTING f_s D.L. DUE TO NON-COMPOSITE DEAD LOADS.
2. D.L.: NON-COMPOSITE DEAD LOAD.
3. M.D.L.: MOMENT DUE TO NON-COMPOSITE DEAD LOAD.
4. +/- $M_{L.L.}$ + IM.: LIVE LOAD MOMENT PLUS IMPACT LOAD INCLUDING ROCKING EFFECT, RE PER CTA IDCM FIGURE 7-1 FOR STRESS AND NORMAL RATING ANALYSIS
5. f_sD.L.: STRESS IN EXTREME FIBERS OF FLANGE FOR CONTROLLING STEEL FLANGE DUE TO VERTICAL NON-COMPOSITE DEAD LOADS AS CALCULATED BELOW: M.D.L. / S_S
6. $f_{s\,L.L.}$ + IM: STRESS IN EXTREME FIBERS OF FLANGE FOR CONTROLLING STEEL FLANGE DUE TO VERTICAL LIVE LOAD PLUS IMPACT LOAD INCLUDING ROCKIG EFFECT AS CALCULATED BELOW: + $M_{L.L.}$+ IM. / S_S
7. $f_{s\,L.L.}$ PLATFORM: STRESS IN EXTREME FIBERS OF FLANGE FOR CONTROLLING STEEL FLANGE DUE TO LIVE LOADS ON THE PLATFORM AND/OR CANOPY STRUCTURE:
8. f_s TOTAL: SUM OF STRESSES AS COMPUTED BELOW (SEE NOTE 2): f_sD.L. + $f_{s\,L.L.}$+ IM
9. f_s ALLOWABLE: BASIC ALLOWABLE STRESS.
10. + $M_{CRANE\ L.L.}$ + IM.: LIVE LOAD MOMENT PLUS IMPACT LOAD AT A REDUCED SPEED, EXCLUDING ROCKING EFFECT, RE, PER CTA IDCM FIGURE 7-2 FOR CTA RAILBOUND CRANE AXLE LOADING FOR MAXIMUM RATING ANALYSIS.
11. $f_{s\,CRANE\ L.L.}$ + IM: STRESS IN EXTREME FIBERS OF FLANGE FOR CONTROLLING STEEL FLANGE DUE TO VERTICAL COMPOSITE LIVE LOAD PLUS IMPACT LOADS FOR MAXIMUM RATING ANALYSIS AS CALCULATED BELOW: + $M_{CRANE\ L.L.}$ + IM. / S_S
12. f_s RATING: ALLOWABLE STRESS FOR MAXIMUM RATING.
13. MAXIMUM RATING: MAXIMUM RATING AS CALCULATED BELOW: (f_s RATING - f_sD.L.) / ($f_{s\,CRANE\ L.L.}$ + IM) >/= 1.0

DESIGN BY:	CMG										
DRAWN BY:	CMG										
CHECKED BY:	WJC										
APPROVED BY:	WJC	4	7/3/2023	ISSUED FOR BID							
CDOT/APPROVED BY:		NO.	DATE	REVISIONS	DES.	DRW.	CHK.	DCCO	CDOT		

TRANSYSTEMS
222 SOUTH RIVERSIDE PLAZA SUITE 610
CHICAGO, ILLINOIS 60606

SKIDMORE, OWINGS & MERRILL LLP
224 SOUTH MICHIGAN AVENUE, SUITE 1000
CHICAGO, ILLINOIS 60604

CHICAGO DEPARTMENT OF TRANSPORTATION
DIVISION OF ENGINEERING

STATE / LAKE LOOP ELEVATED STATION
200 NORTH STATE STREET, CHICAGO, IL 60601

TRACK STRUCTURE GIRDER DESIGN DATA TABLES

CDOT PROJECT D-1-209 | DATE: 7/3/2023

SPEC. NO.

DRAWING NO. S-535

REVISION NO.

TRACK STRUCTURE COLUMN DESIGN DATA VALUES TABLE

NOMENCLATURE	BENT 442		BENT 443		BENT 444		BENT 445		BENT 446		BENT 447	
	NORTH COLUMN	SOUTH COLUMN	NORTH COLUMN	SOUTH COLUMN	NORTH COLUMN	SOUTH COLUMN	NORTH COLUMN	SOUTH COLUMN	NORTH COLUMN	SOUTH COLUMN	NORTH COLUMN	SOUTH COLUMN
STRESS INTERACTION ANALYSIS AND FATIGUE ANALYSIS												
A (IN^2)	134.0	134.0	172.0	172.0	134.0	N/A	172.0	172.0	134.0	134.0	172.0	172.0
$I_{S\ 1\text{-}1}$ (IN^3)	8,989	8,989	10,597	10,597	8,989	N/A	10,597	10,597	8,989	8,989	10,597	10,597
$S_{S\ 1\text{-}1}$ (IN^4)	899	899	1,060	1,060	899	N/A	1,060	1,060	899	899	1,060	1,060
$I_{S\ 2\text{-}2}$ (IN^3)	4,001	4,001	5,334	5,334	4,001	N/A	5,334	5,334	4,001	4,001	5,334	5,334
$S_{S\ 2\text{-}2}$ (IN^4)	400	400	533	533	400	N/A	533	533	400	400	533	533
F_a (KSI) *	21.00	26.25	26.33	26.33	26.24	N/A	26.42	26.42	21.23	26.53	37.84	37.84
$k_1 l_1 / r_1$	51.3	51.3	53.9	53.9	51.4	N/A	53.5	53.5	50.2	50.2	54.2	54.2
$k_2 l_2 / r_2$	54.3	54.3	53.2	53.2	54.4	N/A	52.7	52.7	52.9	52.9	53.5	53.5
CONTROLLING LOAD CASE	DL+LL+IM	DL+WL	DL+LL+IM+W+LF	DL+LL+IM+W+LF	DL+LL+IM+W+LF	N/A	DL+LL+IM+W+LF	DL+LL+IM+W+LF	DL+LL+IM	DL+LL+IM+W+LF	Vehicle Collision	Vehicle Collision
P (KIPS) *	464	103	721	1,068	568	N/A	776	1,062	520	535	687	756
f_a (KSI) *	3.46	0.77	4.19	6.21	4.24	N/A	4.51	6.18	3.88	3.99	3.99	4.39
$M_{1\text{-}1}$ (K-FT) *	69	50	319	40	239	N/A	333	128	162	190	193	87
f_{b1} (KSI) *	0.92	0.67	3.61	0.45	3.19	N/A	3.77	1.45	2.16	2.53	2.18	0.99
F_{b1} (KSI) *	27.50	34.38	34.38	34.38	34.38	N/A	34.38	34.38	27.50	34.38	49.50	49.50
$M_{2\text{-}2}$ (K-FT) *	545	565	751	941	569	N/A	651	960	310	464	1,285	1,329
f_{b2} (KSI) *	16.35	16.94	16.92	21.18	17.08	N/A	14.65	21.61	9.29	13.91	28.94	29.91
F_{b2} (KSI) *	27.50	34.38	34.38	34.38	34.38	N/A	34.38	34.38	27.50	34.38	49.50	49.50
f_a / F_a *	0.16	0.03	0.16	0.24	0.16	N/A	0.17	0.23	0.18	0.15	0.11	0.12
ALLOWABLE STRESS FACTOR	100%	125%	125%	125%	125%	N/A	125%	125%	100%	125%	180%	180%
RATIO	0.839	0.542	0.809	0.950	0.805	N/A	0.757	0.993	0.632	0.667	0.734	0.740
FATIGUE CATEGORY (S_{Rfat})	C (13.0)	C (13.0)	C (13.0)	C (13.0)	C (13.0)	N/A	C (13.0)	C (13.0)	C (13.0)	C (13.0)	C (13.0)	C (13.0)
f_s RANGE (KSI)	0.05	0.03	0.17	0.01	0.15	N/A	0.15	0.06	0.17	0.15	0.26	0.26

TRACK STRUCTURE COLUMN DESIGN DATA VALUES TABLE (CONT.)

NOMENCLATURE	BENT 449		BENT 450		BENT 451		BENT 452		BENT 453	
	NORTH COLUMN	SOUTH COLUMN	NORTH COLUMN	SOUTH COLUMN	NORTH COLUMN	SOUTH COLUMN	NORTH COLUMN	SOUTH COLUMN	NORTH COLUMN	SOUTH COLUMN
STRESS INTERACTION ANALYSIS AND FATIGUE ANALYSIS										
A (IN^2)	172.0	172.0	96.0	96.0	96.0	96.0	134.0	134.0	134.0	134.0
$I_{S\ 1\text{-}1}$ (IN^3)	10,597	10,597	6,848	6,848	6,848	6,848	8,989	8,989	8,989	8,989
$S_{S\ 1\text{-}1}$ (IN^4)	1,060	1,060	685	685	685	685	899	899	899	899
$I_{S\ 2\text{-}2}$ (IN^3)	5,334	5,334	2,668	2,668	2,668	2,668	4,001	4,001	4,001	4,001
$S_{S\ 2\text{-}2}$ (IN^4)	533	533	267	267	267	267	400	400	400	400
F_a (KSI) *	38.49	26.73	26.35	26.35	26.32	26.32	26.01	26.01	26.84	26.84
$k_1 l_1 / r_1$	52.0	52.0	48.3	48.3	48.4	48.4	52.2	52.2	49.1	49.1
$k_2 l_2 / r_2$	50.9	50.9	53.8	53.8	54.0	54.0	55.5	55.5	51.5	51.5
CONTROLLING LOAD CASE	Vehicle Collision	DL+LL+IM+W+LF	DL+LL+IM+W+LF	DL+LL+IM+W+LF	DL+WL	DL+WL	DL+LL+IM+W+LF	DL+WL	DL+WL	DL+WL
P (KIPS) *	748	1,002	382	389	294	216	594	208	137	240
f_a (KSI) *	4.35	5.83	3.98	4.05	3.06	2.25	4.43	1.55	1.02	1.79
$M_{1\text{-}1}$ (K-FT) *	85	640	173	156	34	19	104	1	111	63
f_{b1} (KSI) *	0.96	7.24	3.02	2.73	0.60	0.34	1.39	0.02	1.48	0.84
F_{b1} (KSI) *	49.50	34.38	34.38	34.38	34.38	34.38	34.38	34.38	34.38	34.38
$M_{2\text{-}2}$ (K-FT) *	1,322	435	267	280	473	431	556	498	683	743
f_{b2} (KSI) *	29.75	9.80	11.99	12.60	21.27	19.37	16.69	14.95	20.48	22.28
F_{b2} (KSI) *	49.50	34.38	34.38	34.38	34.38	34.38	34.38	34.38	34.38	34.38
f_a / F_a *	0.11	0.22	0.15	0.15	0.12	0.09	0.17	0.06	0.04	0.07
ALLOWABLE STRESS FACTOR	180%	125%	125%	125%	125%	125%	125%	125%	125%	125%
RATIO	0.733	0.772	0.623	0.637	0.753	0.659	0.750	0.495	0.677	0.739
FATIGUE CATEGORY (S_{Rfat})	C (13.0)	C (13.0)	C (13.0)	C (13.0)	C (13.0)	C (13.0)	C (13.0)	C (13.0)	C (13.0)	C (13.0)
f_s RANGE (KSI)	0.26	0.26	0.12	0.12	0.11	0.11	0.09	0.09	0.07	0.06

TRACK STRUCTURE COLUMN DESIGN DATA NOTES:

1. A: COLUMN GROSS SECTION
2. $I_{S\ 1\text{-}1}$, $S_{S\ 1\text{-}1}$: STRONG AXIS MOMENT OF INERTIA AND SECTION MODULUS OF THE STEEL COLUMN.
3. $I_{S\ 2\text{-}2}$, $S_{S\ 2\text{-}2}$: WEAK AXIS MOMENT OF INERTIA AND SECTION MODULUS OF THE STEEL COLUMN.
4. F_a: AXIAL STRESS THAT WOULD BE PERMITTED IF AXIAL FORCE ALONE EXISTED.
5. $k_1 l_1 / r_1$, $k_2 l_2 / r_2$: RATIOS OF THE EFFECTIVE LENGTH IN INCHES TO THE RADIUS OF GYRATION IN INCHES, OF THE COMPRESSION MEMBER ABOUT THE STRONG AND WEAK AXIS, RESPECTIVELY.
6. CONTROLLING LOAD CASE: THE CONTROLLING LOAD CASE (PER CTA IDCM CHAPTER 7 SECTION 13.2) THAT GOVERNS THE STEEL COLUMN DESIGN.
7. P: CALCULATED AXIAL FORCE.
8. f_a: CALCULATED AXIAL STRESS.
9. $M_{1\text{-}1}$, $M_{2\text{-}2}$: CACLULATED BENDING MOMENT ABOUT STRONG AND WEAK AXIS, RESPECTIVELY.
10. f_{b1}, f_{b2}: CACLULATED COMPRESSIVE BENDING STRESS ABOUT STRONG AND WEAK AXIS, RESPECTIVELY, AT THE POINT UNDER CONSIDERATION.
11. F_{b1}, F_{b2}: COMPRESSIVE BENDING STRESS ABOUT STRONG AND WEAK AXIS, RESPECTIVELY, THAT WOULD BE PERMITTED IF BENDING ALONE EXISTED.
12. f_a / F_a: AXIAL COMPRESSION UTILIZATION RATIO.
13. ALLOWABLE STRESS FACTOR: ALLOWABLE OVERSTRESS FACTOR BASED UPON LOAD CASES (AS DEFINED IN CTA IDCM CHAPTER 7 SECTION 13.2).
14. RATIO: AXIAL AND BENDING COMPRESSION STRESS INTERACTION UTILIZATION RATIO AS CALCULATED BELOW:

WHEN $f_a / F_a \leq 0.15$:

$$\frac{f_a}{F_a} + \frac{f_{b1}}{F_{b1}} + \frac{f_{b2}}{F_{b2}} \leq 1.0$$

WHEN $f_a / F_a > 0.15$:

$$\frac{f_a}{F_a} + \frac{f_{b1}}{F_{b1}\left[1 - \frac{f_a}{0.514\,\pi^2 E}\left(\frac{k_1 l_1}{r_1}\right)^2\right]} + \frac{f_{b2}}{F_{b2}\left[1 - \frac{f_a}{0.514\,\pi^2 E}\left(\frac{k_2 l_2}{r_2}\right)^2\right]} \leq 1.0$$

DESIGN BY:	CMG											
DRAWN BY:	CMG											
CHECKED BY:	WJC											
APPROVED BY:	WJC	4	7/3/2023	ISSUED FOR BID								
CDOT/APPROVED BY:		NO.	DATE	REVISIONS	DES.	DRW.	CHK.	DCCO	CDOT			

TRANSYSTEMS
222 SOUTH RIVERSIDE PLAZA SUITE 610
CHICAGO, ILLINOIS 60606

SKIDMORE, OWINGS & MERRILL LLP
224 SOUTH MICHIGAN AVENUE, SUITE 1000
CHICAGO, ILLINOIS 60604

CHICAGO DEPARTMENT OF TRANSPORTATION
DIVISION OF ENGINEERING

STATE / LAKE LOOP ELEVATED STATION
200 NORTH STATE STREET, CHICAGO, IL 60601

TRACK STRUCTURE COLUMN DESIGN DATA TABLES

CDOT PROJECT D-1-209 | DATE: 7/3/2023

SPEC. NO.

DRAWING NO. S-536

REVISION NO.

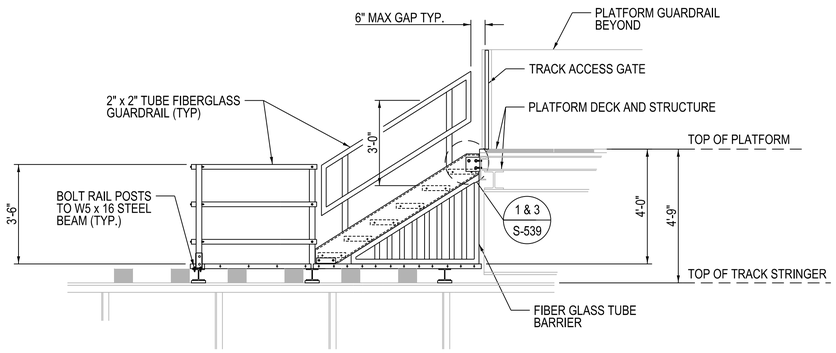

5 ELEVATION - TYPE 1
3/8" = 1'-0"

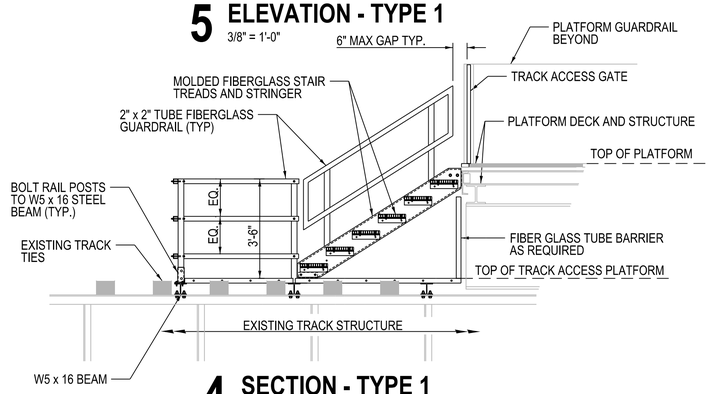

4 SECTION - TYPE 1
3/8" = 1'-0"

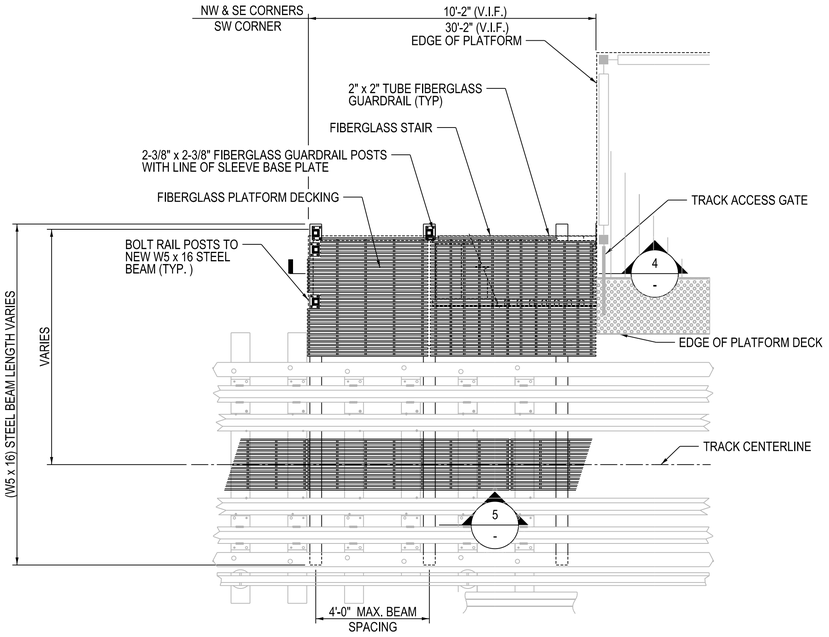

3 TRACK LEVEL PLAN - TYPE 1
3/8" = 1'-0"

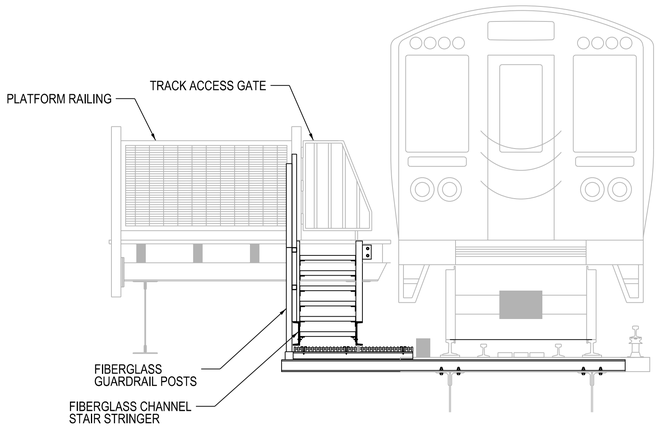

2 ELEVATION - TYPE 1
3/8" = 1'-0"

NOTES:

1. FIBERGLASS DECK BEARING BARS TO BE 5/8" WIDE BY 2" TALL SPACED 1 ½" ON CENTER.
2. HANDRAIL POSTS AT FIBERGLASS PLATFORM DECK TO BE "DOUBLE WALL" WITH A 2X2 TUBE SECTION GLUED INSIDE OF THE LARGER 2 3/8" X 2 3/8" TUBE SECTION.
3. COLOR OF FIBERGLASS STRINGERS, GUARDRAIL TUBES AND DECKING TO BE DARK GREY.
4. COLOR OF TREADS (EXCLUSIVE OF NOSING) TO BE 'SAFETY YELLOW'.
5. COLOR OF HANDRAIL TUBES AND POSTS TO BE 'SAFETY YELLOW'.
6. TRACK ACCESS STAIR PLAN AT NORTHWEST AND SOUTHEAST CORNERS ARE SHOWN. TRACK ACCESS STAIR AT SOUTHWEST CORNER SIMILAR, BUT MIRRORED AND LONGER.

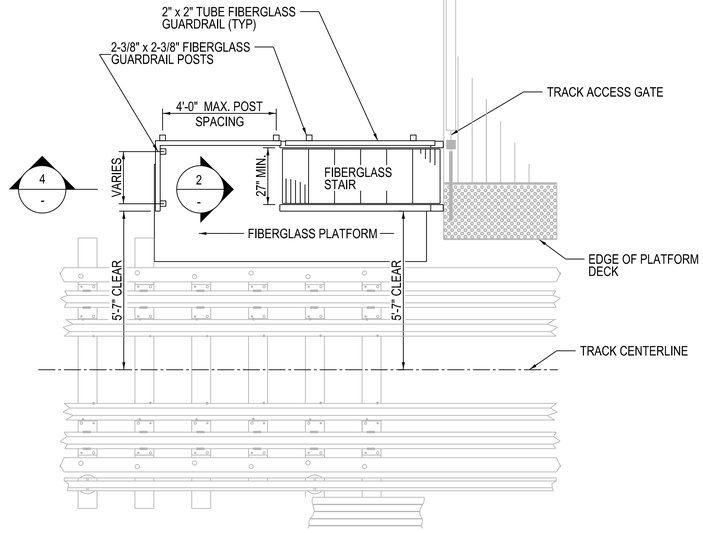

1 PLATFORM LEVEL PLAN - TYPE 1
3/8" = 1'-0"

DESIGN BY:	WJC								
DRAWN BY:	AH								
CHECKED BY:	WJC								
APPROVED BY:	WJC	4	7/3/2023	ISSUED FOR BID					
CDOT/APPROVED BY:		NO.	DATE	REVISIONS	DES.	DRW.	CHK.	DCCO	CDOT

TRANSYSTEMS
222 SOUTH RIVERSIDE PLAZA SUITE 610
CHICAGO, ILLINOIS 60606

SKIDMORE, OWINGS & MERRILL LLP
224 SOUTH MICHIGAN AVENUE, SUITE 1000
CHICAGO, ILLINOIS 60604

CHICAGO DEPARTMENT OF TRANSPORTATION
DIVISION OF ENGINEERING

STATE / LAKE LOOP ELEVATED STATION
200 NORTH STATE STREET, CHICAGO, IL 60601

SPEC. NO.

TRACK ACCESS STAIR PLANS, SECTION, AND ELEVATION 1

DRAWING NO. S-537

CDOT PROJECT D-1-209

DATE: 7/3/2023

REVISION NO.

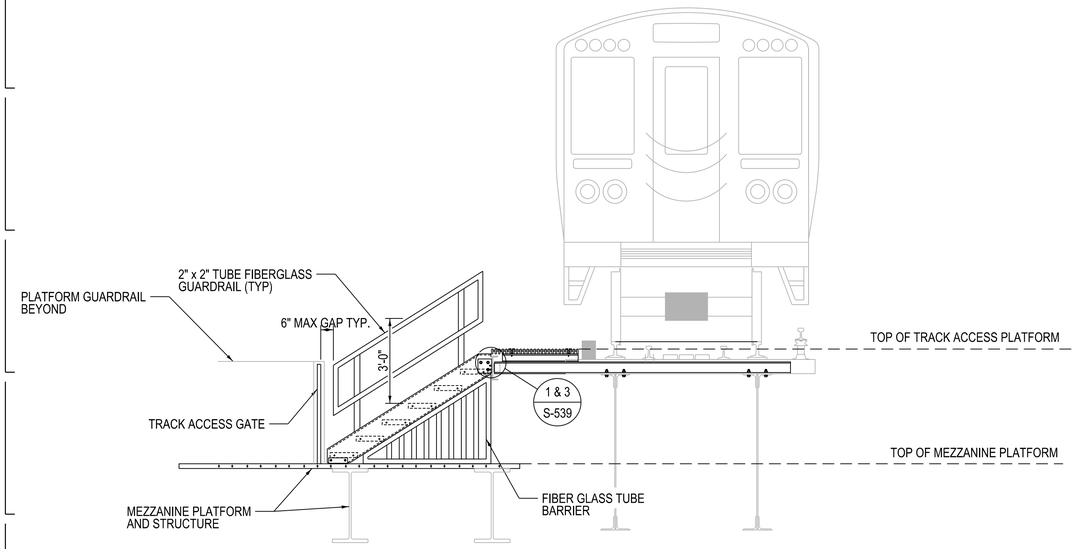

4 ELEVATION - TYPE 2
3/8" = 1'-0"

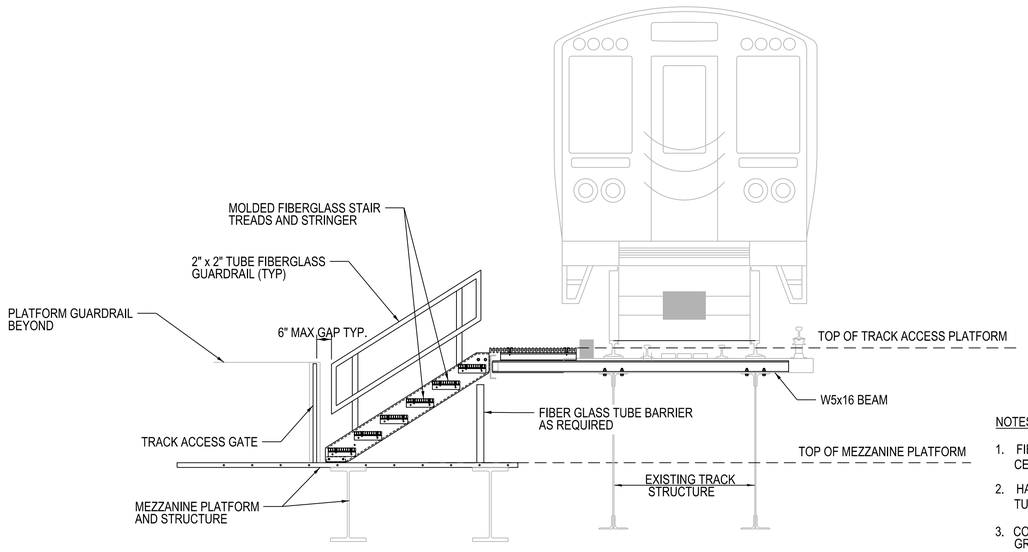

2 SECTION - TYPE 2
3/8" = 1'-0"

NOTES:

1. FIBERGLASS DECK BEARING BARS TO BE 5/8" WIDE BY 2" TALL SPACED 1 1/2" ON CENTER.
2. HANDRAIL POSTS AT FIBERGLASS PLATFORM DECK TO BE "DOUBLE WALL" WITH A 2X2 TUBE SECTION GLUED INSIDE OF THE LARGER 2 3/8 X 2 3/8" TUBE SECTION.
3. COLOR OF FIBERGLASS STRINGERS, GUARDRAIL TUBES AND DECKING TO BE DARK GREY.
4. COLOR OF TREADS (EXCLUSIVE OF NOSING) TO BE 'SAFETY YELLOW'.
5. COLOR OF HANDRAIL TUBES AND POSTS TO BE 'SAFETY YELLOW'.
6. TRACK ACCESS STAIR PLAN AT NORTHEAST CORNER IS SHOWN.

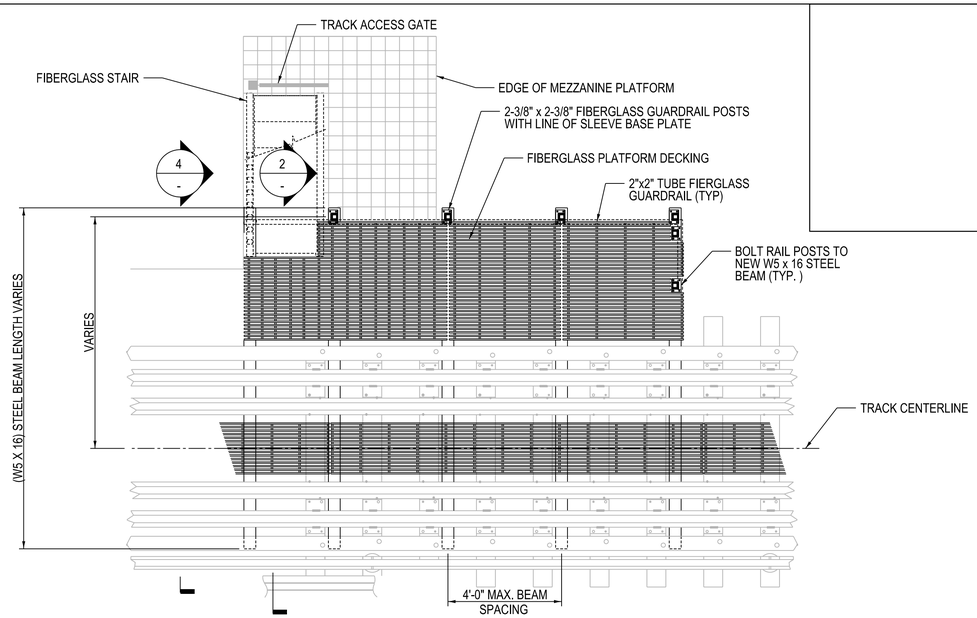

3 TRACK LEVEL PLAN - TYPE 2
3/8" = 1'-0"

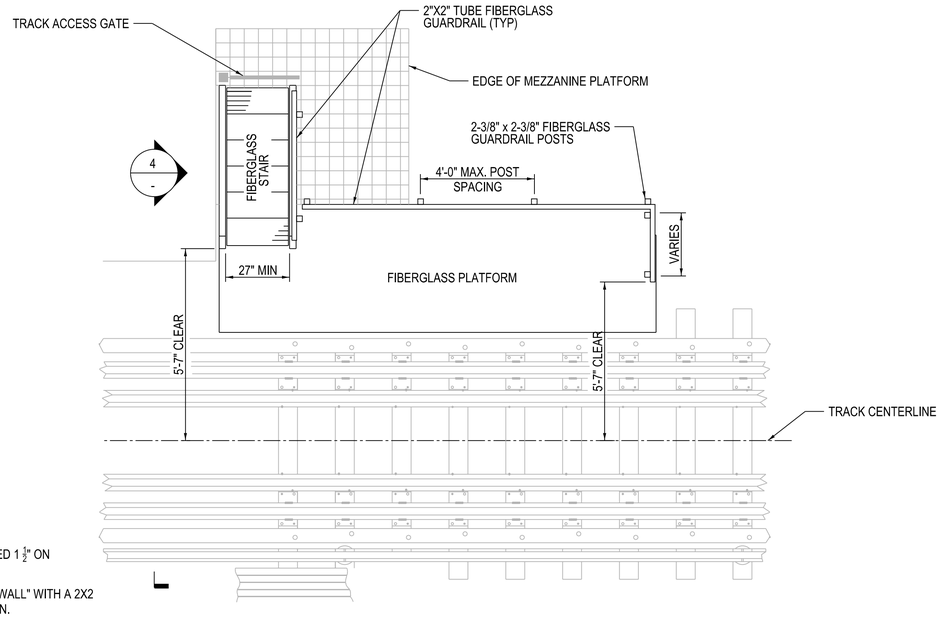

1 PLATFORM LEVEL PLAN - TYPE 2
3/8" = 1'-0"

DESIGN BY:	WJC								
DRAWN BY:	JPL								
CHECKED BY:	WJC								
APPROVED BY:	WJC	4	7/3/2023	ISSUED FOR BID					
CDOT/APPROVED BY:		NO.	DATE	REVISIONS	DES.	DRW.	CHK.	DCCO	CDOT

TRANSYSTEMS
222 SOUTH RIVERSIDE PLAZA SUITE 610
CHICAGO, ILLINOIS 60606

SKIDMORE, OWINGS & MERRILL LLP
224 SOUTH MICHIGAN AVENUE, SUITE 1000
CHICAGO, ILLINOIS 60604

CHICAGO DEPARTMENT OF TRANSPORTATION
DIVISION OF ENGINEERING

STATE / LAKE LOOP ELEVATED STATION
200 NORTH STATE STREET, CHICAGO, IL 60601

SPEC. NO.

TRACK ACCESS STAIR PLANS, SECTION, AND ELEVATION 2

DRAWING NO. S-538

CDOT PROJECT D-1-209

DATE: 7/3/2023

REVISION NO.

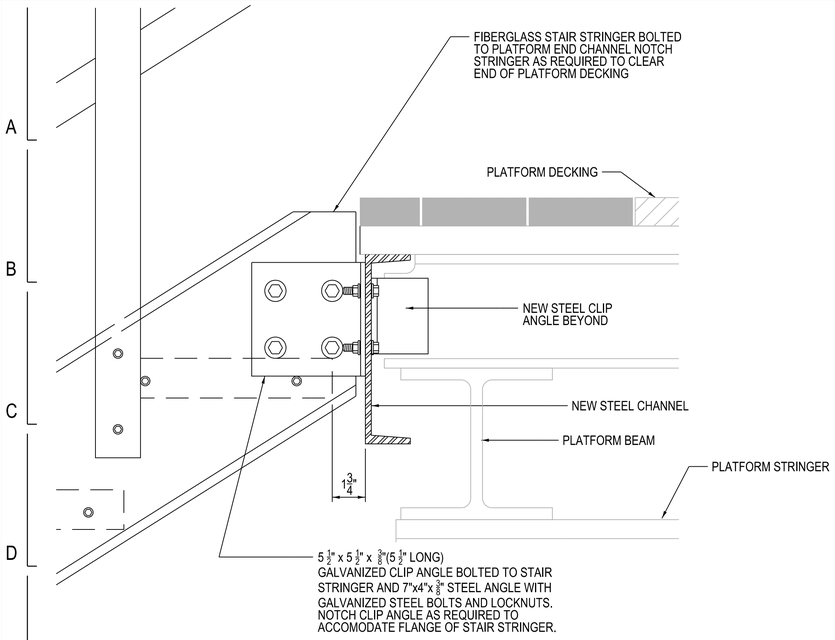

3 ELEVATION DETAIL
3" = 1'-0"

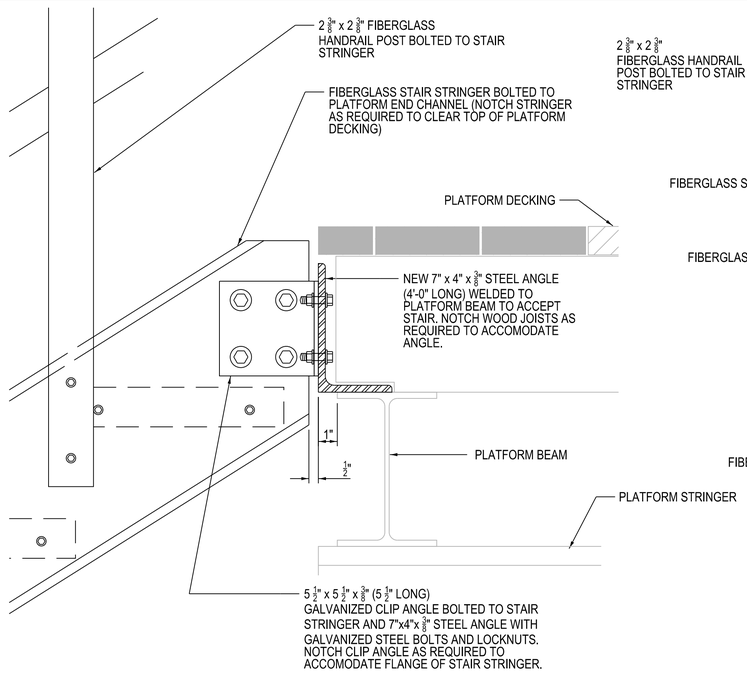

1 ELEVATION DETAIL
3" = 1'-0"

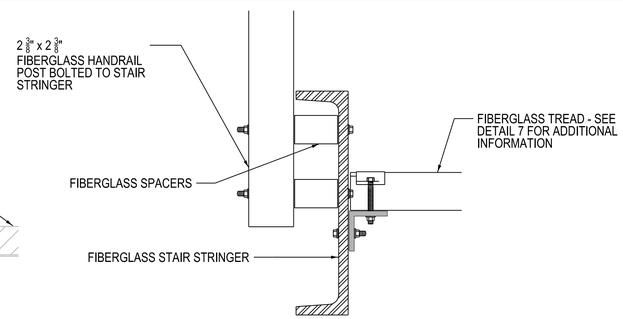

6 HANDRAIL/STRINGER DETAIL
3" = 1'-0"

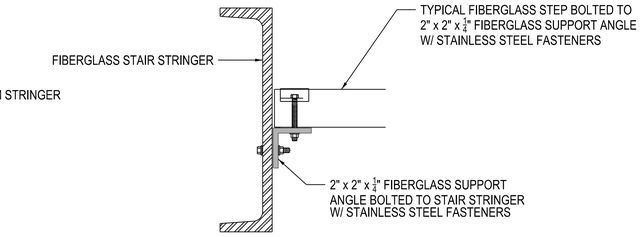

4 TREAD/STRINGER DETAIL
3" = 1'-0"

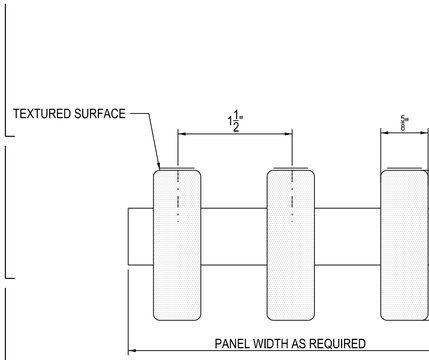

7 FIBERGLASS TREAD
1'-0" = 1'-0"

NOTES

1. FIBERGLASS DECK BEARING BARS TO BE 5/8" WIDE BY 2" TALL SPACED 1 1/2" ON CENTER.
2. HANDRAIL POSTS AT FIBERGLASS PLARFORM DECK TO BE "DOUBLE WALL" WITH A 2X2 TUBE SECTION GLUED INSIDE OF THE LARGER 2 3/8" x 2 3/8" TUBE SECTION.
3. COLOR OF FIBERGLASS STRINGERS, GUARDRAIL TUBES AND DECKING TO BE DARK GREY.
4. COLOR OF TREADS (EXCLUSIVE OF NOSING) TO BE 'SAFETY YELLOW'.
5. COLOR OF HANDRAIL TUBES AND POSTS TO BE 'SAFETY YELLOW'

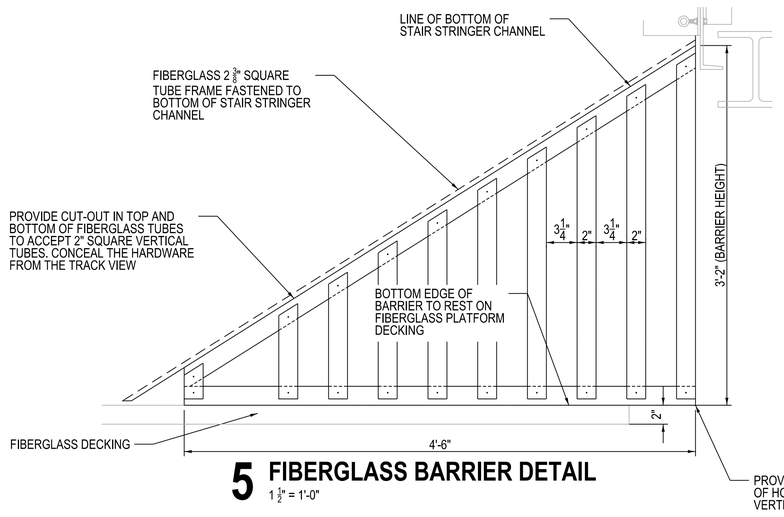

5 FIBERGLASS BARRIER DETAIL
1 1/2" = 1'-0"

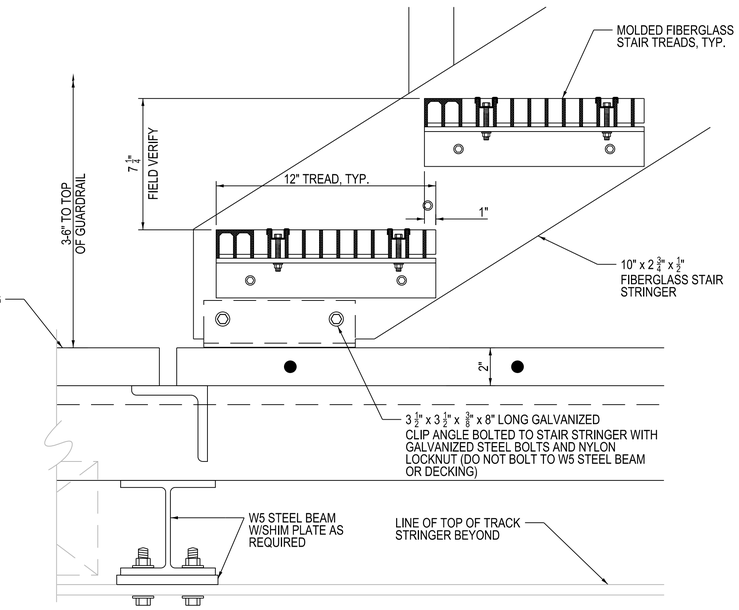

2 DETAIL
3" = 1'-0"

DESIGN BY:	WJC								
DRAWN BY:	AH								
CHECKED BY:	WJC								
APPROVED BY:	WJC	4	7/3/2023	ISSUED FOR BID					
CDOT/APPROVED BY:		NO.	DATE	REVISIONS	DES.	DRW.	CHK.	DCCO	CDOT

TRANSYSTEMS
222 SOUTH RIVERSIDE PLAZA SUITE 610
CHICAGO, ILLINOIS 60606

SKIDMORE, OWINGS & MERRILL LLP
224 SOUTH MICHIGAN AVENUE, SUITE 1000
CHICAGO, ILLINOIS 60604

CHICAGO DEPARTMENT OF TRANSPORTATION
DIVISION OF ENGINEERING

STATE / LAKE LOOP ELEVATED STATION
200 NORTH STATE STREET, CHICAGO, IL 60601

TRACK ACCESS STAIR DETAILS

CDOT PROJECT D-1-209

DATE: 7/3/2023

SPEC. NO.

DRAWING NO. S-539

REVISION NO.

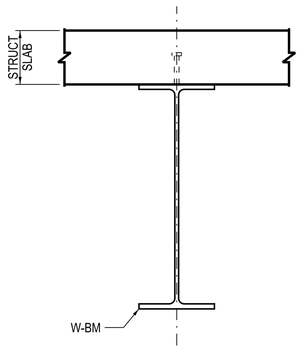

1 COMPOSITE CAST IN PLACE CONCRETE SLAB ON STEEL BEAM DETAIL
1" = 1'-0"

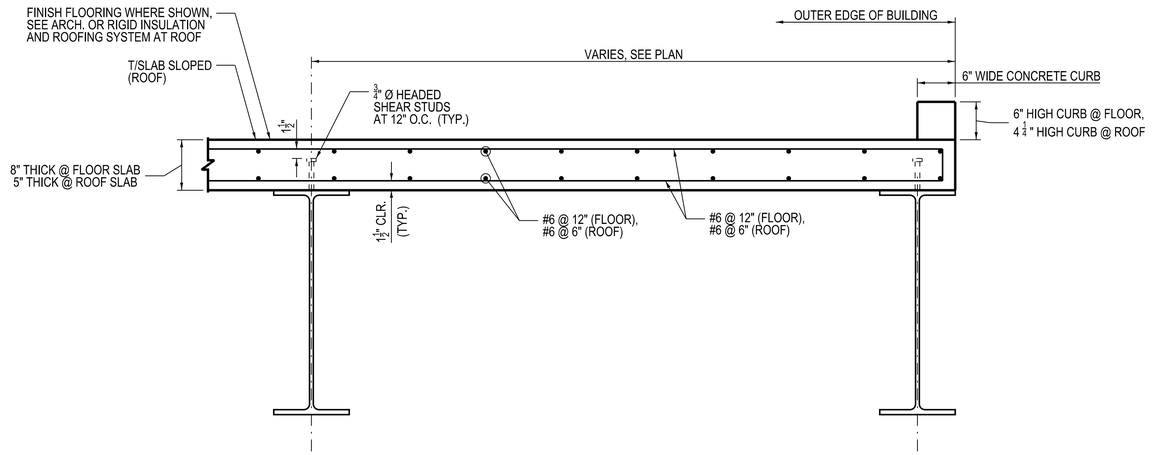

2 TYPICAL COMPOSITE CAST IN PLACE SLAB REINFORCEMENT DETAIL
1" = 1'-0"

(FLOOR SHOWN, ROOF CURB SIMILAR)

3 CONCRETE CURB DETAIL
1 1/2" = 1'-0"

NOTES:

1. THE DETAILS ON THIS SHEET PERTAIN ONLY TO THE COMMUNICATIONS AND ELECTRICAL ROOMS.
2. ALL REINFORCEMENT TO BE EPOXY COATED.

DESIGN BY:	IS/MD								
DRAWN BY:	CMD								
CHECKED BY:	DKS								
APPROVED BY:	WJC	4	7/3/2023	ISSUED FOR BID					
CDOT/APPROVED BY:		NO.	DATE	REVISIONS	DES.	DRW.	CHK.	DCCO	CDOT

TRANSYSTEMS
222 SOUTH RIVERSIDE PLAZA SUITE 610
CHICAGO, ILLINOIS 60606

SKIDMORE, OWINGS & MERRILL LLP
224 SOUTH MICHIGAN AVENUE, SUITE 1000
CHICAGO, ILLINOIS 60604

CHICAGO DEPARTMENT OF TRANSPORTATION
DIVISION OF ENGINEERING

STATE / LAKE LOOP ELEVATED STATION
200 NORTH STATE STREET, CHICAGO, IL 60601

SPEC. NO.

COMM & ELEC ROOM DETAILS 1

DRAWING NO. S-540

CDOT PROJECT D-1-209

DATE: 7/3/2023

REVISION NO.

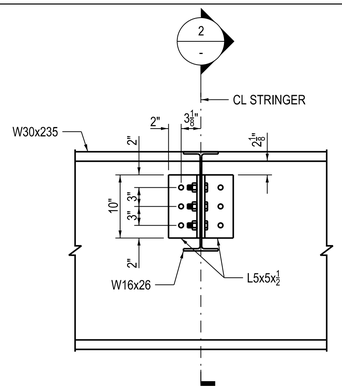

1 DETAIL
1" = 1'-0"

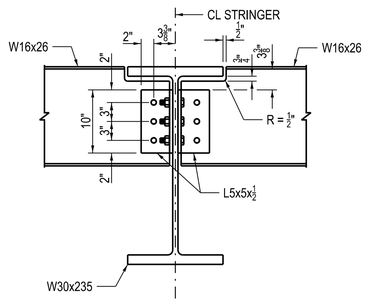

2 SECTION
1" = 1'-0"

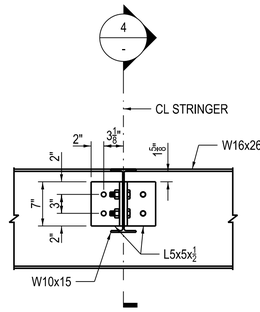

3 DETAIL
1" = 1'-0"

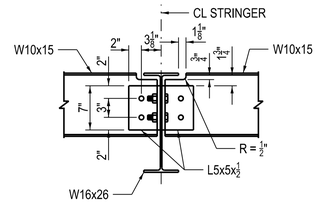

4 SECTION
1" = 1'-0"

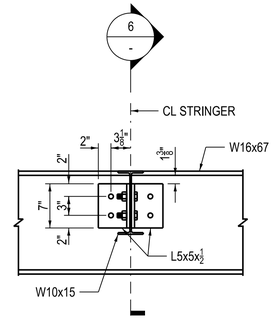

5 DETAIL
1" = 1'-0"

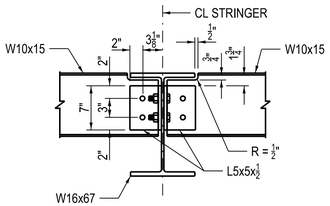

6 SECTION
1" = 1'-0"

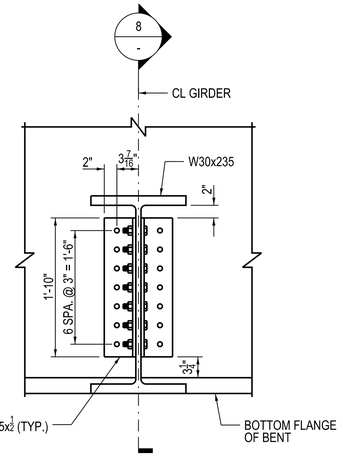

7 SHEAR CONNECTION AT BENT
1" = 1'-0"

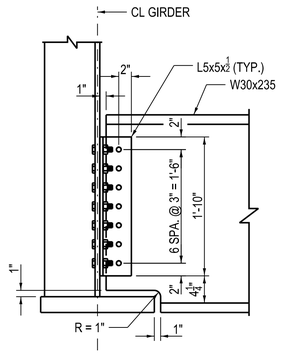

8 SECTION
1" = 1'-0"

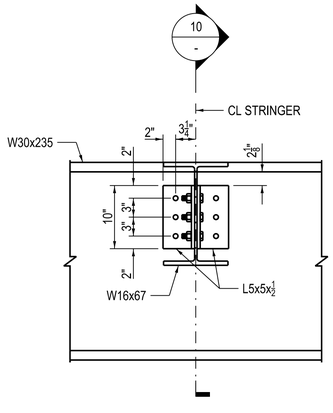

9 DETAIL
1" = 1'-0"

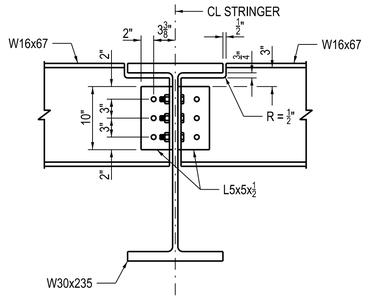

10 SECTION
1" = 1'-0"

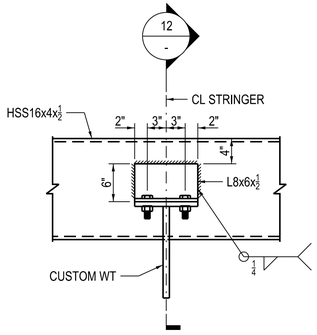

11 STAIR STRINGER CONNECTION
1" = 1'-0"

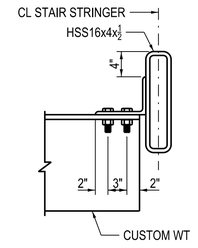

12 SECTION
1" = 1'-0"

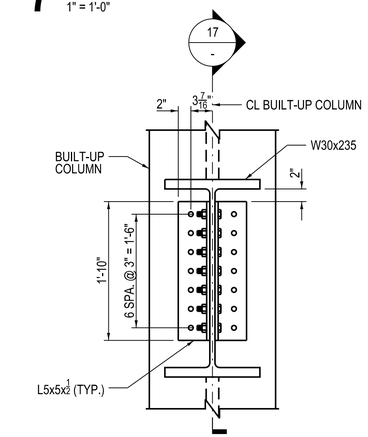

16 SHEAR CONNECTION AT COLUMN
1" = 1'-0"

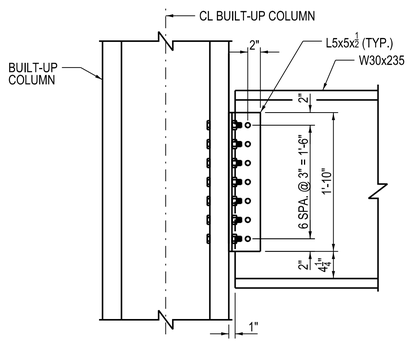

17 SECTION
1" = 1'-0"

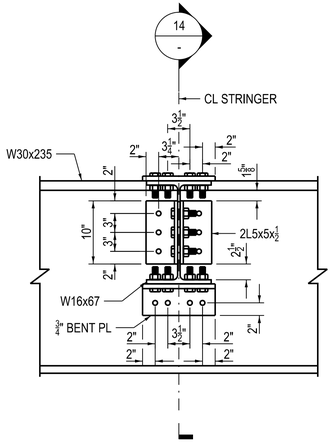

13 MOMENT CONNECTION
1" = 1'-0"

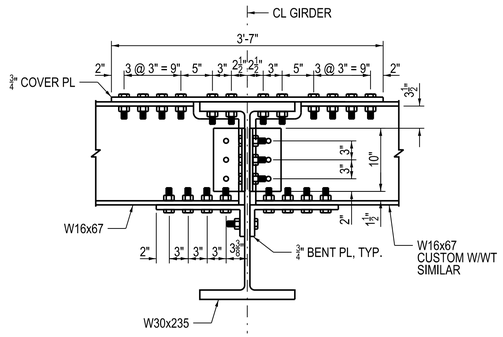

14 SECTION
1" = 1'-0"

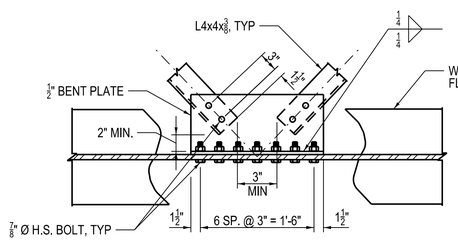

15 BOTTOM LATERAL BRACING DETAIL
1" = 1'-0"

DESIGN BY:	IS/MD								
DRAWN BY:	CMD								
CHECKED BY:	DKS								
APPROVED BY:	WJC	4	7/3/2023	ISSUED FOR BID					
CDOT/APPROVED BY:		NO.	DATE	REVISIONS	DES.	DRW.	CHK.	DCCO	CDOT

TRANSYSTEMS
222 SOUTH RIVERSIDE PLAZA SUITE 610
CHICAGO, ILLINOIS 60606

SKIDMORE, OWINGS & MERRILL LLP
224 SOUTH MICHIGAN AVENUE, SUITE 1000
CHICAGO, ILLINOIS 60604

CHICAGO DEPARTMENT OF TRANSPORTATION
DIVISION OF ENGINEERING

STATE / LAKE LOOP ELEVATED STATION
200 NORTH STATE STREET, CHICAGO, IL 60601

COMM & ELEC ROOM DETAILS 2

CDOT PROJECT D-1-209 | DATE: 7/3/2023

SPEC. NO.

DRAWING NO. S-541

REVISION NO.

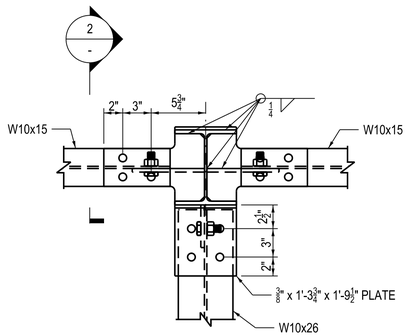

1 DETAIL
1 1/2" = 1'-0"

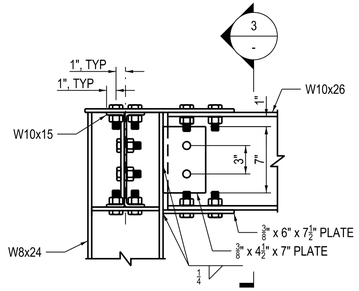

2 SECTION
1 1/2" = 1'-0"

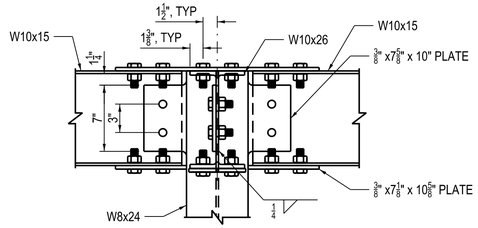

3 SECTION
1 1/2" = 1'-0"

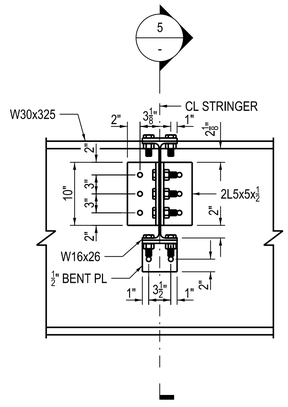

4 DETAIL
1" = 1'-0"

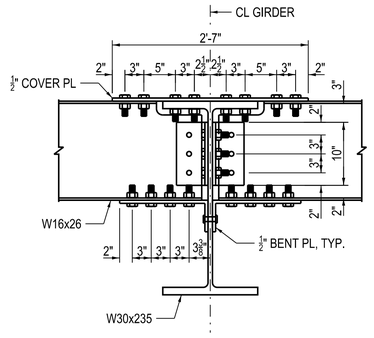

5 SECTION
1" = 1'-0"

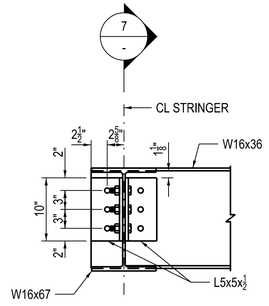

6 DETAIL
1" = 1'-0"

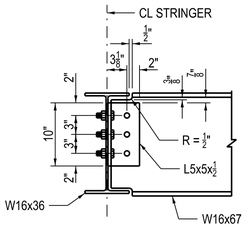

7 SECTION
1" = 1'-0"

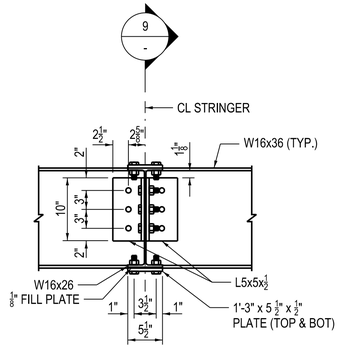

8 DETAIL
1" = 1'-0"

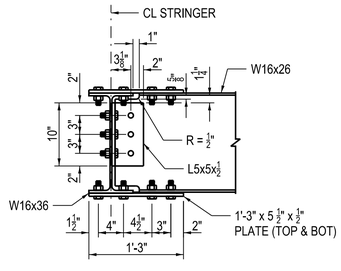

9 SECTION
1" = 1'-0"

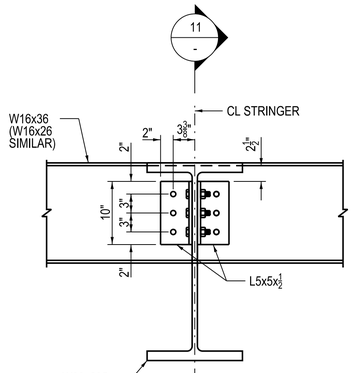

10 DETAIL
1" = 1'-0"

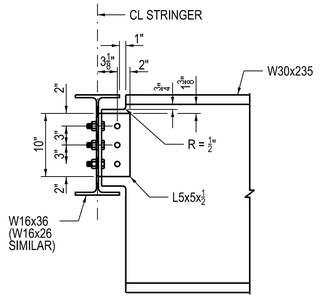

11 SECTION
1" = 1'-0"

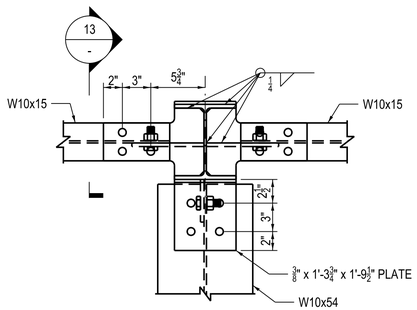

12 DETAIL
1 1/2" = 1'-0"

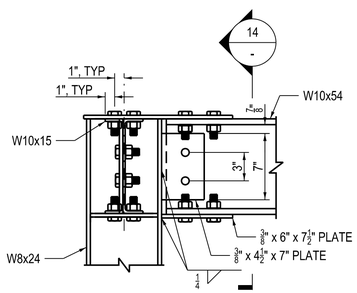

13 SECTION
1 1/2" = 1'-0"

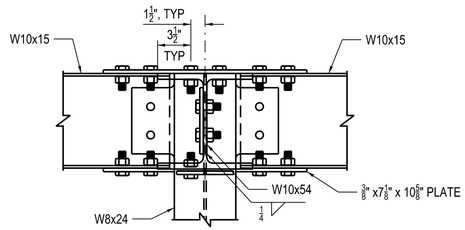

14 SECTION
1 1/2" = 1'-0"

DESIGN BY:	IS/MD								
DRAWN BY:	CMD								
CHECKED BY:	DKS								
APPROVED BY:	WJC	4	7/3/2023	ISSUED FOR BID					
CDOT/APPROVED BY:		NO.	DATE	REVISIONS	DES.	DRW.	CHK.	DCCO	CDOT

TranSystems
TRANSYSTEMS
222 SOUTH RIVERSIDE PLAZA SUITE 610
CHICAGO, ILLINOIS 60606

SOM
SKIDMORE, OWINGS & MERRILL LLP
224 SOUTH MICHIGAN AVENUE, SUITE 1000
CHICAGO, ILLINOIS 60604

CDOT
CHICAGO DEPARTMENT OF TRANSPORTATION
DIVISION OF ENGINEERING

STATE / LAKE LOOP ELEVATED STATION
200 NORTH STATE STREET, CHICAGO, IL 60601

COMM & ELEC ROOM DETAILS 3

CDOT PROJECT D-1-209

DATE: 7/3/2023

SPEC. NO.

DRAWING NO.
S-542

REVISION NO.

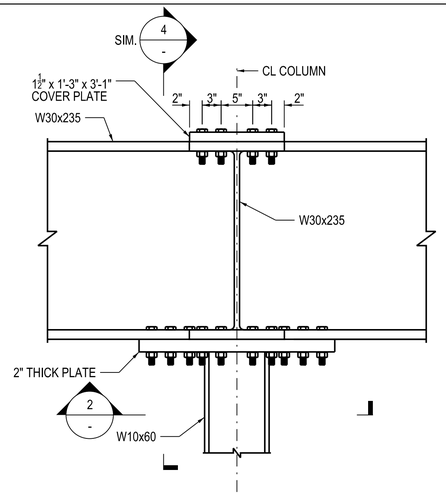

1 COLUMN CAP PLATE DETAIL
1" = 1'-0"

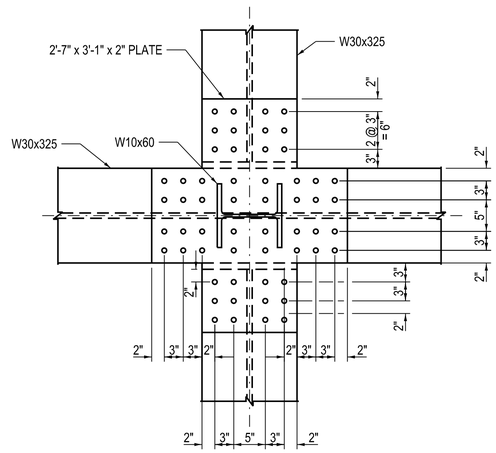

2 SECTION
1" = 1'-0"

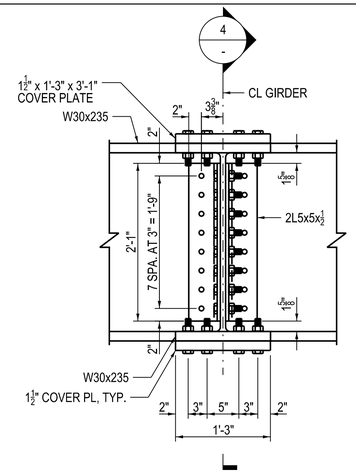

3 DETAIL
1" = 1'-0"

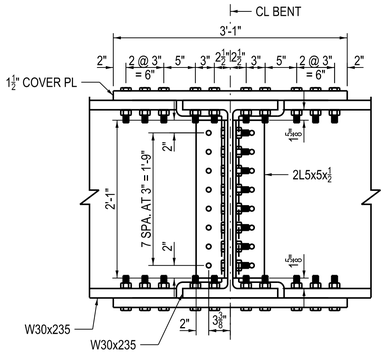

4 SECTION
1" = 1'-0"

NOTE: FOR ANCHOR & BASE PLATE INSULATION, SEE SHEET S-520

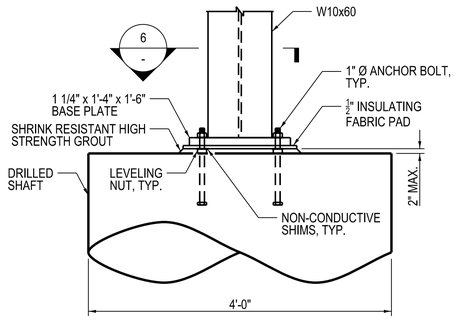

5 DETAIL
1" = 1'-0"

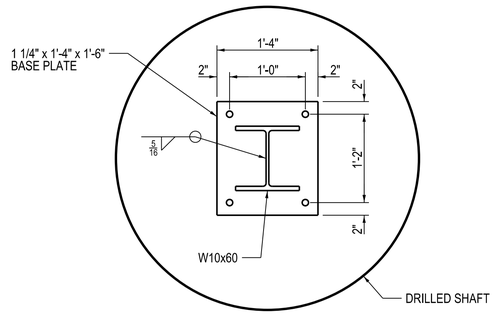

6 SECTION
1" = 1'-0"

10 DETAIL
1" = 1'-0"

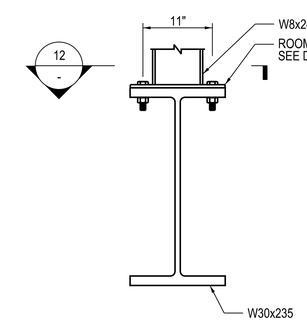

11 DETAIL
1" = 1'-0"

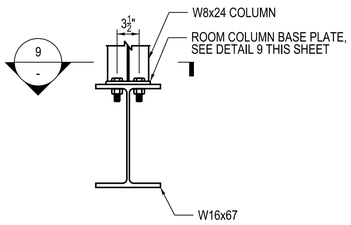

7 DETAIL
1" = 1'-0"

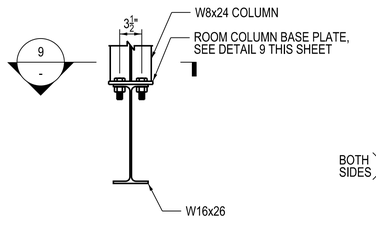

8 DETAIL
1" = 1'-0"

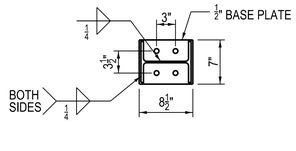

9 ROOM COLUMN BASE PLATE DETAIL
1" = 1'-0"

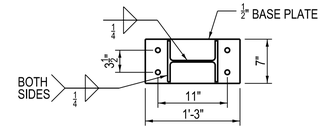

12 ROOM COLUMN BASE PLATE DETAIL
1" = 1'-0"

DESIGN BY:	IS/MD								
DRAWN BY:	CMD								
CHECKED BY:	DKS								
APPROVED BY:	WJC	4	7/3/2023	ISSUED FOR BID					
CDOT/APPROVED BY:		NO.	DATE	REVISIONS	DES.	DRW.	CHK.	DCCO	CDOT

TRANSYSTEMS
222 SOUTH RIVERSIDE PLAZA SUITE 610
CHICAGO, ILLINOIS 60606

SKIDMORE, OWINGS & MERRILL LLP
224 SOUTH MICHIGAN AVENUE, SUITE 1000
CHICAGO, ILLINOIS 60604

CHICAGO DEPARTMENT OF TRANSPORTATION
DIVISION OF ENGINEERING

STATE / LAKE LOOP ELEVATED STATION
200 NORTH STATE STREET, CHICAGO, IL 60601

COMM & ELEC ROOM DETAILS 4

CDOT PROJECT D-1-209

DATE: 7/3/2023

SPEC. NO.

DRAWING NO. S-543

REVISION NO.

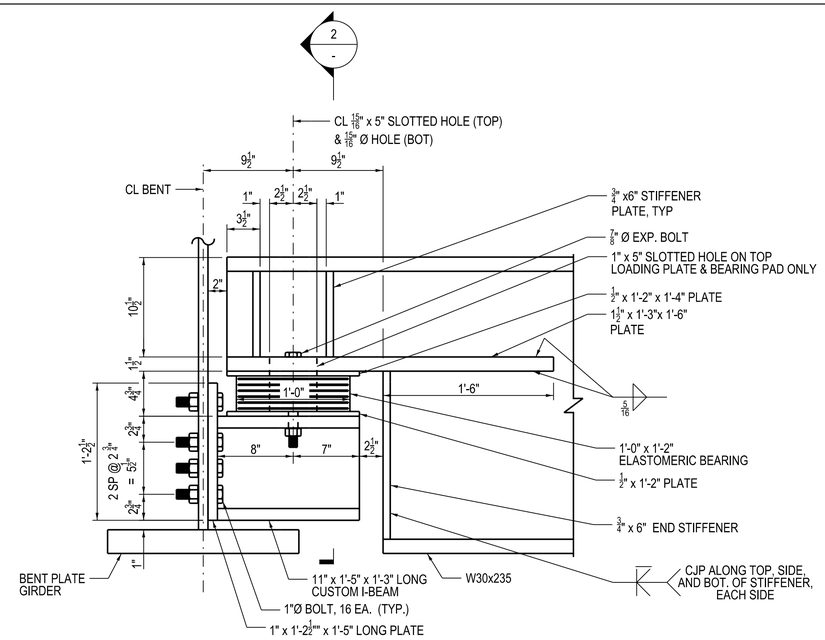

1 EXPANSION BEARING
1 1/2" = 1'-0"

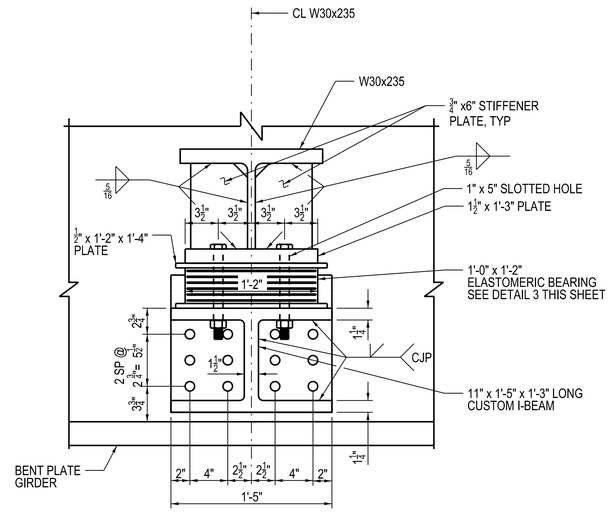

2 SECTION
1 1/2" = 1'-0"

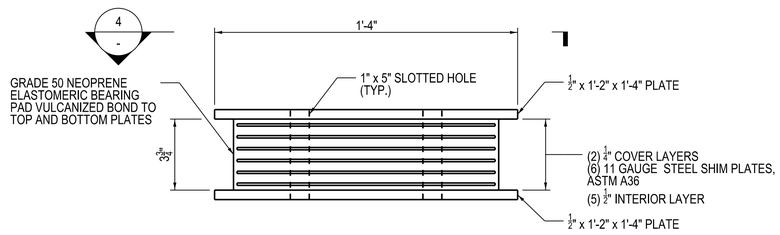

3 BEARING PAD DETAIL
3" = 1'-0"

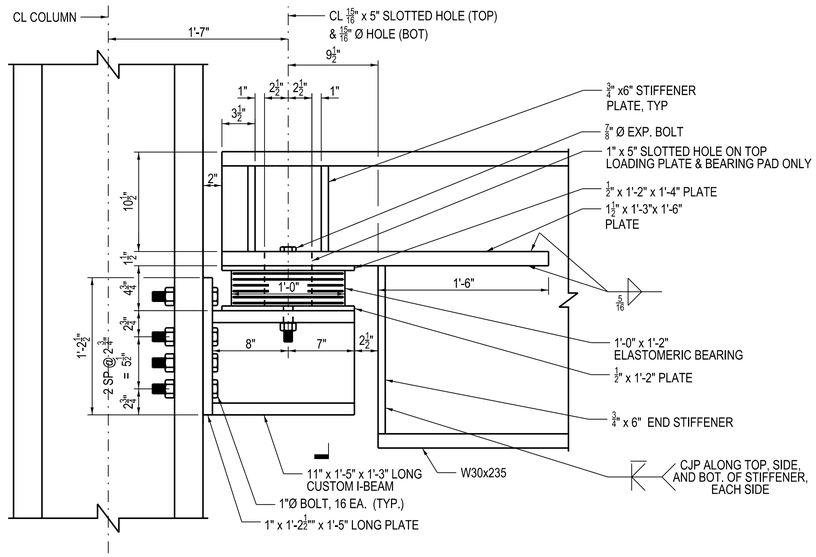

5 EXPANSION BEARING
1 1/2" = 1'-0"

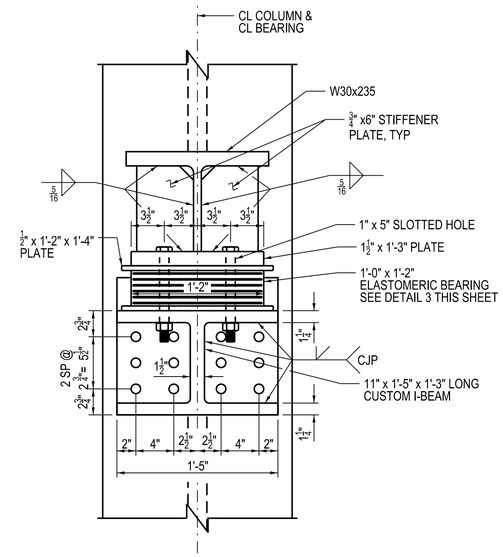

6 SECTION
1 1/2" = 1'-0"

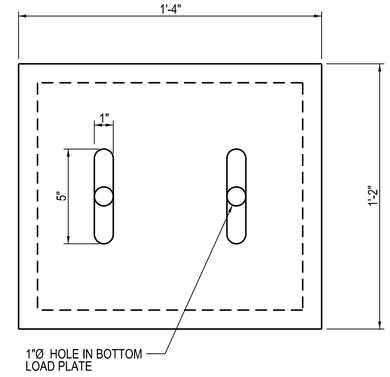

4 BEARING PAD PLAN VIEW
3" = 1'-0"

DESIGN BY:	IS/MD								
DRAWN BY:	CMD								
CHECKED BY:	DKS								
APPROVED BY:	WJC	4	7/3/2023	ISSUED FOR BID					
CDOT/APPROVED BY:		NO.	DATE	REVISIONS	DES.	DRW.	CHK.	DCCO	CDOT

TRANSYSTEMS
222 SOUTH RIVERSIDE PLAZA SUITE 610
CHICAGO, ILLINOIS 60606

SKIDMORE, OWINGS & MERRILL LLP
224 SOUTH MICHIGAN AVENUE, SUITE 1000
CHICAGO, ILLINOIS 60604

CHICAGO DEPARTMENT OF TRANSPORTATION
DIVISION OF ENGINEERING

STATE / LAKE LOOP ELEVATED STATION
200 NORTH STATE STREET, CHICAGO, IL 60601

COMM & ELEC ROOM DETAILS 5

CDOT PROJECT D-1-209 | DATE: 7/3/2023

SPEC. NO.

DRAWING NO. S-544

REVISION NO.

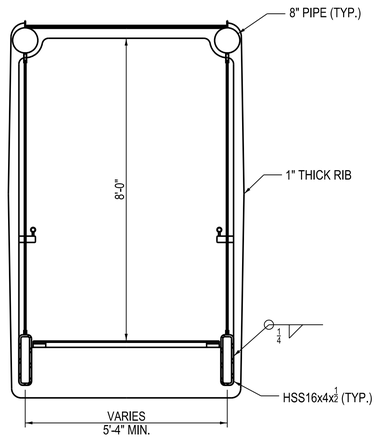

1 SECTION THRU STAIR AND LANDINGS
1/2" = 1'-0"

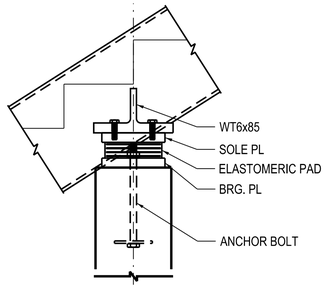

2 SECTION THRU BEARING
1" = 1'-0"

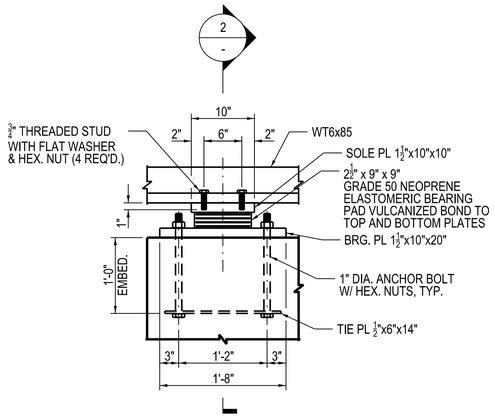

3 BEARING DETAIL AT FOUNDATION
1" = 1'-0"

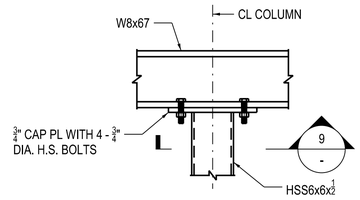

4 CAP PLATE DETAIL
1" = 1'-0"

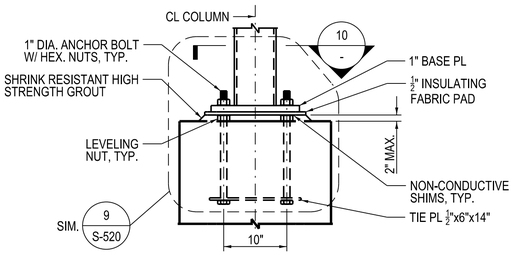

5 BASE PLATE DETAIL
1" = 1'-0"

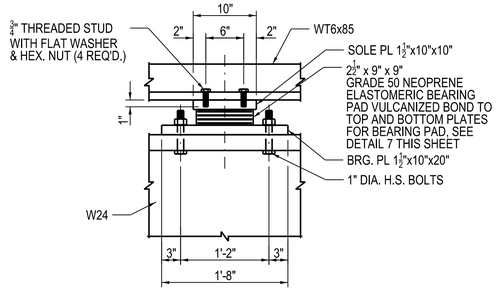

6 BEARING DETAIL AT STAIR SUPPORT
1" = 1'-0"

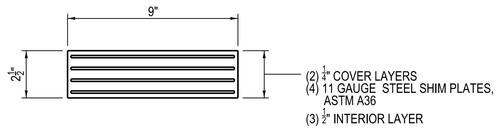

7 STAIR BEARING PAD DETAIL
3" = 1'-0"

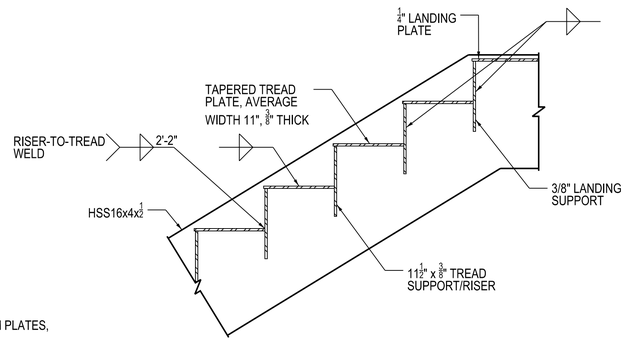

8 STAIR TREAD DETAIL
1" = 1'-0"

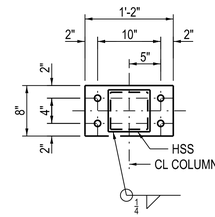

9 CAP PLATE PLAN
1" = 1'-0"

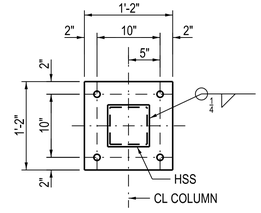

10 BASE PLATE PLAN
1" = 1'-0"

DESIGN BY:	IS/MD									
DRAWN BY:	CMD									
CHECKED BY:	DKS									
APPROVED BY:	WJC	4	7/3/2023	ISSUED FOR BID						
CDOT/APPROVED BY:		NO.	DATE	REVISIONS	DES.	DRW.	CHK.	DCCO	CDOT	

TRANSYSTEMS
222 SOUTH RIVERSIDE PLAZA SUITE 610
CHICAGO, ILLINOIS 60606

SKIDMORE, OWINGS & MERRILL LLP
224 SOUTH MICHIGAN AVENUE, SUITE 1000
CHICAGO, ILLINOIS 60604

CHICAGO DEPARTMENT OF TRANSPORTATION
DIVISION OF ENGINEERING

STATE / LAKE LOOP ELEVATED STATION
200 NORTH STATE STREET, CHICAGO, IL 60601

EXIT STAIR DETAILS 1

CDOT PROJECT D-1-209 | DATE: 7/3/2023

SPEC. NO.

DRAWING NO. S-550

REVISION NO.

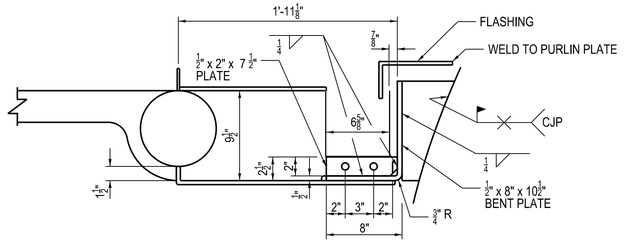

1 STAIR TO RIB CANOPY CONNECTION
1 1/2" = 1'-0"

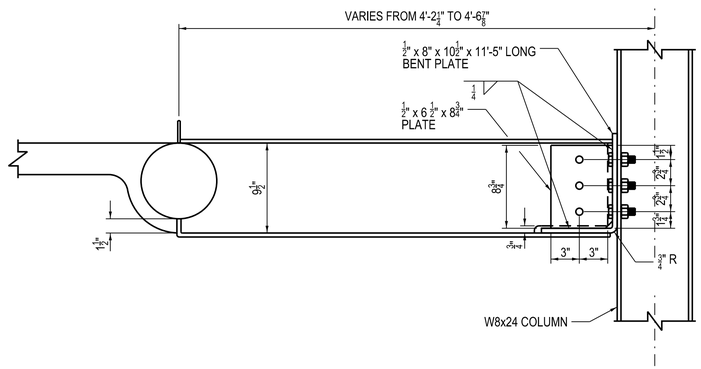

2 STAIR RIB TO COLUMN CONNECTION
1 1/2" = 1'-0"

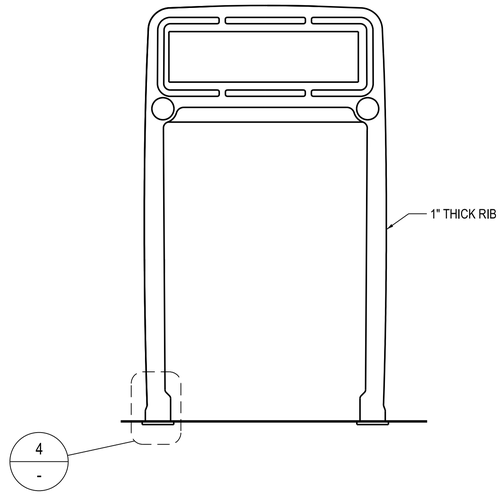

3 EXIT STAIR PORTAL
1/2" = 1'-0"

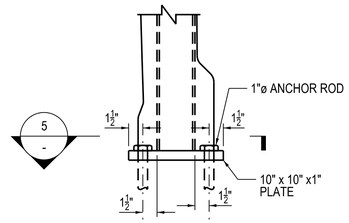

4 EXIST PORTAL BASE DETAIL
1 1/2" = 1'-0"

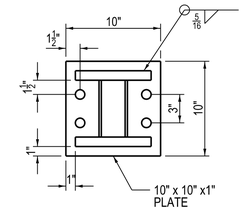

5 SECTION
1 1/2" = 1'-0"

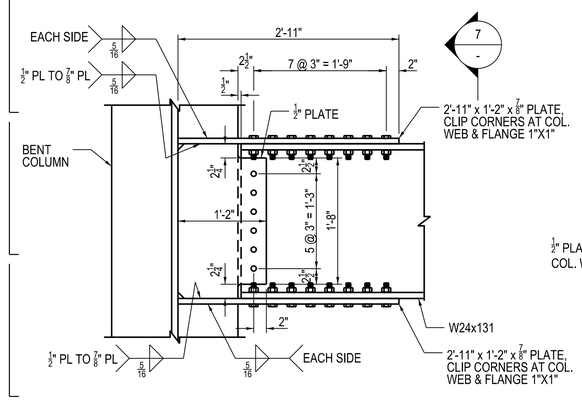

6 DETAIL
1" = 1'-0"

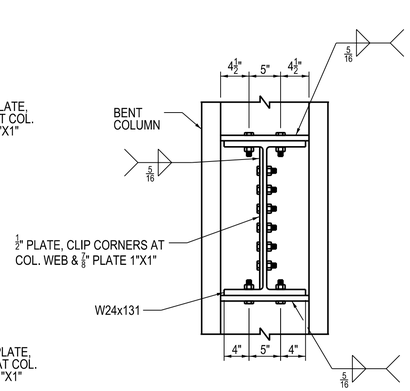

7 VIEW
1" = 1'-0"

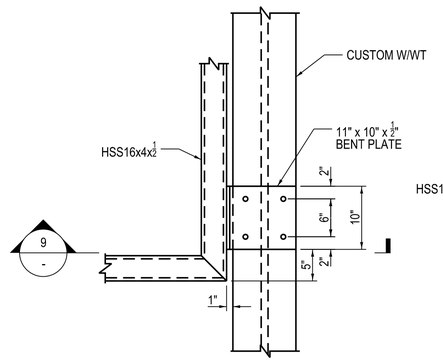

8 DETAIL
1" = 1'-0"

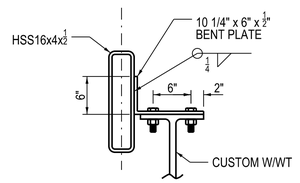

9 SECTION
1" = 1'-0"

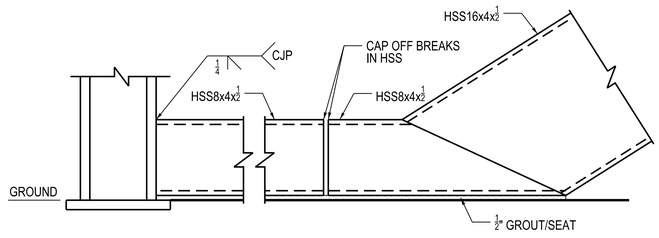

10 SECTION
1 1/2" = 1'-0"

DESIGN BY:	IS/MD									
DRAWN BY:	CMD									
CHECKED BY:	DKS									
APPROVED BY:	WJC	4	7/3/2023	ISSUED FOR BID						
CDOT/APPROVED BY:		NO.	DATE	REVISIONS	DES.	DRW.	CHK.	DCCO	CDOT	

TRANSYSTEMS
222 SOUTH RIVERSIDE PLAZA SUITE 610
CHICAGO, ILLINOIS 60606

SKIDMORE, OWINGS & MERRILL LLP
224 SOUTH MICHIGAN AVENUE, SUITE 1000
CHICAGO, ILLINOIS 60604

CHICAGO DEPARTMENT OF TRANSPORTATION
DIVISION OF ENGINEERING

STATE / LAKE LOOP ELEVATED STATION
200 NORTH STATE STREET, CHICAGO, IL 60601

EXIT STAIR DETAILS 2

CDOT PROJECT D-1-209

DATE: 7/3/2023

SPEC. NO.

DRAWING NO. S-551

REVISION NO.

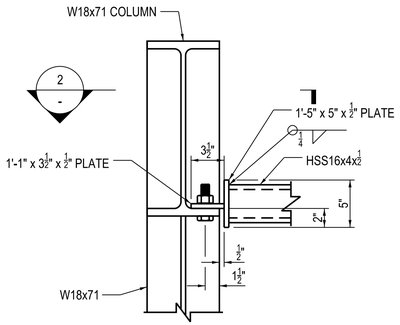

1 DETAIL
1 1/2" = 1'-0"

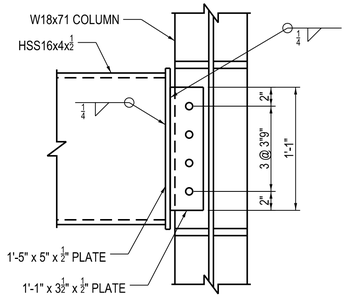

2 SECTION
1 1/2" = 1'-0"

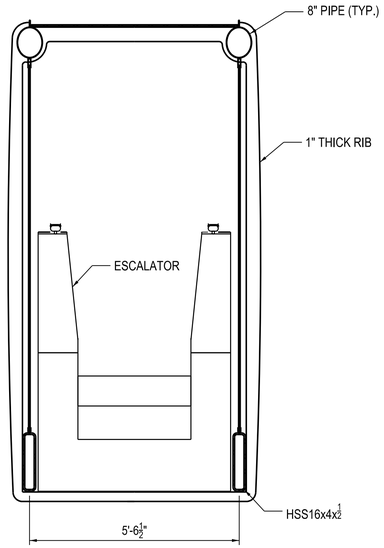

5 SECTION
1/2" = 1'-0"

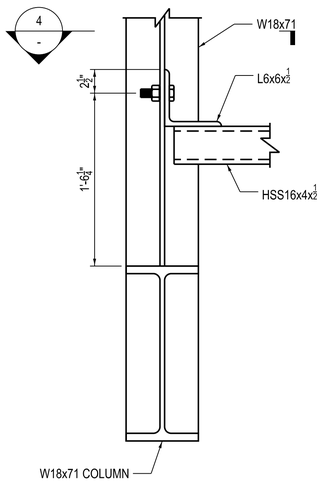

3 DETAIL
1 1/2" = 1'-0"

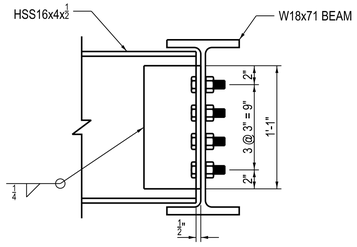

4 SECTION
1 1/2" = 1'-0"

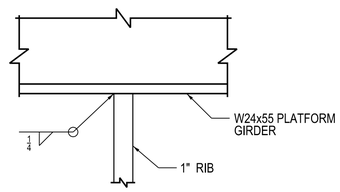

6 DETAIL
3" = 1'-0"

DESIGN BY:	IS/MD								
DRAWN BY:	CMD								
CHECKED BY:	DKS								
APPROVED BY:	WJC	4	7/3/2023	ISSUED FOR BID					
CDOT/APPROVED BY:		NO.	DATE	REVISIONS	DES.	DRW.	CHK.	DCCO	CDOT

TRANSYSTEMS
222 SOUTH RIVERSIDE PLAZA SUITE 610
CHICAGO, ILLINOIS 60606

SKIDMORE, OWINGS & MERRILL LLP
224 SOUTH MICHIGAN AVENUE, SUITE 1000
CHICAGO, ILLINOIS 60604

CHICAGO DEPARTMENT OF TRANSPORTATION
DIVISION OF ENGINEERING

STATE / LAKE LOOP ELEVATED STATION
200 NORTH STATE STREET, CHICAGO, IL 60601

SPEC. NO.

ESCALATOR DETAILS

DRAWING NO.
S-552

CDOT PROJECT D-1-209

DATE: 7/3/2023

REVISION NO.

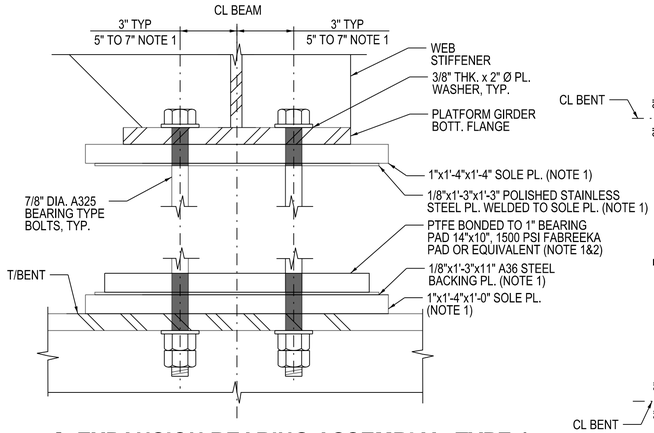

1 EXPANSION BEARING ASSEMBLY - TYPE 1
3" = 1'-0"

NOTES:
1. ADJUST BOLT SPACING TO CLEAR VERTICAL STIFFENER IN SUPPORT BENT. SEE DETAIL 1C & 1D. ADJUST LENGTH OF BEARING PLATE, SOLE PLATE AND PTFE PAD.
2. PTFE SLIDE BEARINGS SHALL BE CAPABLE OR TRANSFERRING 1500 PSI IN BEARING MIN.

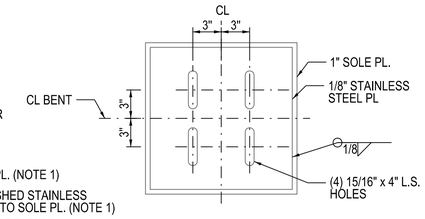

1A TOP ASSEMBLY
1 1/2" = 1'-0"

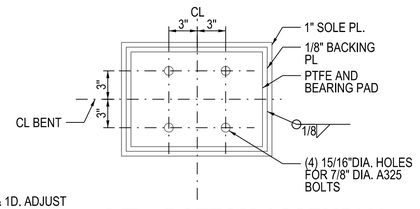

1B BOTTOM ASSEMBLY
1 1/2" = 1'-0"

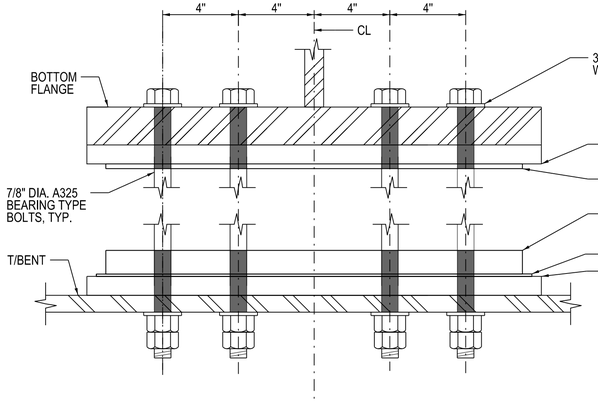

2 EXPANSION BEARING ASSEMBLY - TYPE 2
3" = 1'-0"

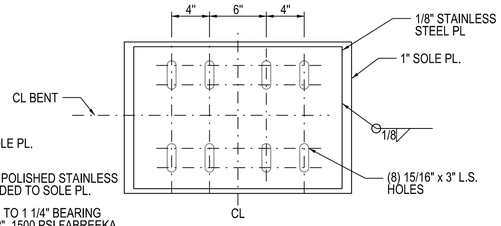

2A TOP ASSEMBLY
1 1/2" = 1'-0"

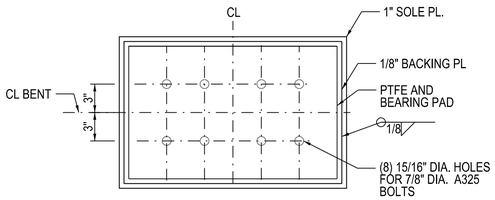

2B BOTTOM ASSEMBLY
1 1/2" = 1'-0"

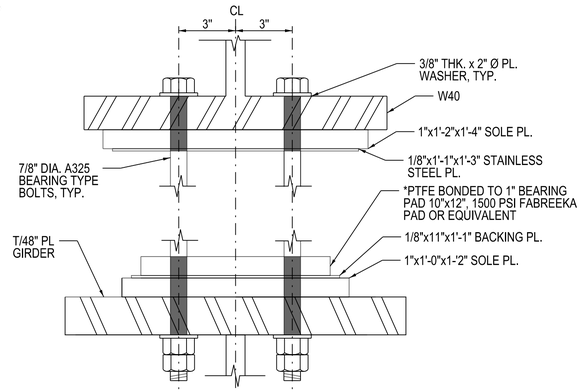

3 EXPANSION BEARING ASSEMBLY - TYPE 3
3" = 1'-0"

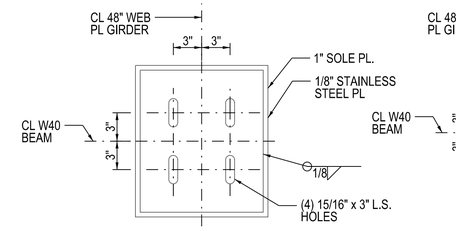

3A TOP ASSEMBLY
1 1/2" = 1'-0"

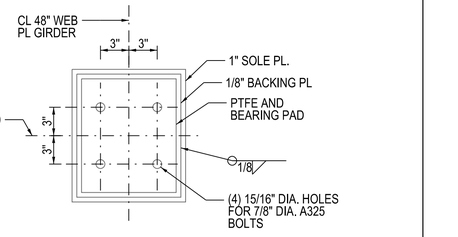

3B BOTTOM ASSEMBLY
1 1/2" = 1'-0"

ALTERNATE BOTTOM AND TOP ASSEMBLY PLATES

NOTES:
1. ADJUST BOLT SPACING TO CLEAR VERTICAL STIFFENER IN SUPPORT BENT. ADJUST LENGTH OF BEARING PLATE, SOLE PLATE AND PTFE PAD.

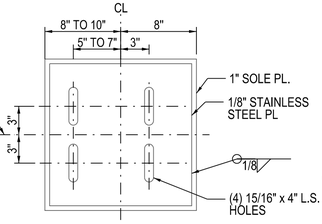

1C TOP ASSEMBLY
1 1/2" = 1'-0"

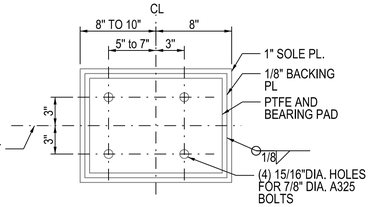

1D BOTTOM ASSEMBLY
1 1/2" = 1'-0"

EXPANSION ASSEMBLY SCHEDULE

GRID / MARK	TYPE	SUPPORTED MEMBER	ALLOWABLE LONGITUDINAL MOVEMENT (IN) SEE NOTE 2	LOAD DEMAND (SEE NOTE 1)			REMARKS
				VERTICAL DOWNWARD FORCE (K)	VERTICAL UPLIFT FORCE (K)	LATERAL SHEAR (K)	
442A, 442B, 442C, 445A, 445B, 445E, 445G, 445H, 445K, 445L, 445F, 445CE, 445DE,446A,446B,446C, 446D,446E,446F,447A, 447B,447C,447D,447E, 447F,449A,449B,449C, 449D, 449E, 449F, 453D, 453E, 453F	1	VARIOUS PLATFORM BEAMS	2"	180	1	20	
447G, 447H, 449G, 449H	2	PLATE GIRDER	1 1/2"	300	0	0	
445C, 445D, 450C, 450D	1	W36/W36 COPED	2"	75	0	20	SEE DETAIL 1/S-565 FOR 445C AND 445D SEE DETAIL 1/S-569 FOR 450C AND 450D
450A, 450B, 450E, 450F	4	W24	2"	25	2	0	
447X, 447Y,449X, 449Y	5	W36	1 1/2"	40	0	0	SEE DETAIL 4/S-567
447R, 447S, 447T, 447U	3	W40	1 1/2"	20	36	0	SEE DETAIL 1/S-575

1. ALL TABULATED LOAD DEMANDS ARE DUE TO UNFACTORED LOAD EFFECTS OF DEAD LOAD (D), LIVE LOAD (L), AND WIND (W). COMBINATIONS OF LOADS CONSIDERED ARE THOSE USED FOR STEEL DESIGN PER ASCE 7-16.
2. MOVEMENT VALUE GIVEN CAN OCCUR IN EACH DIRECTION, CAUSING OPENING AND CLOSING OF EXPANSION JOINT SO THAT THE TOTAL MOVEMENT RANGE IS TWICE THE TABULATED VALUE.

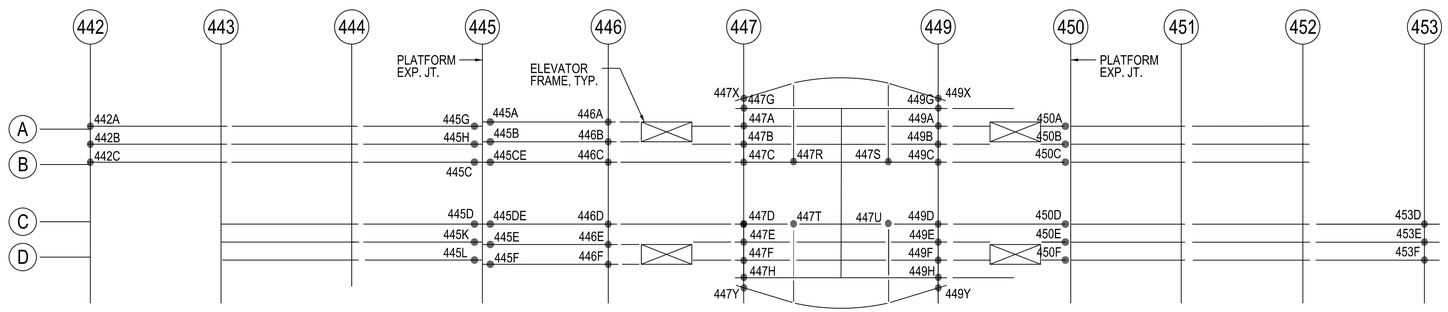

4 EXPANSION ASSEMBLY KEY PLAN - PLATFORM LEVEL
1" = 30'-0"

DESIGN BY:	UT									
DRAWN BY:	UT									
CHECKED BY:	JL									
APPROVED BY:	JL	4	7/3/2023	ISSUED FOR BID						
CDOT/APPROVED BY:		NO.	DATE	REVISIONS	DES.	DRW.	CHK.	DCCO	CDOT	

TRANSYSTEMS
222 SOUTH RIVERSIDE PLAZA SUITE 610
CHICAGO, ILLINOIS 60606

SKIDMORE, OWINGS & MERRILL LLP
224 SOUTH MICHIGAN AVENUE, SUITE 1000
CHICAGO, ILLINOIS 60604

GARZA KARHOFF ENGINEERING, LLC
120 NORTH LASALLE STREET, SUITE 1400
CHICAGO, ILLINOIS 60602

CHICAGO DEPARTMENT OF TRANSPORTATION
DIVISION OF ENGINEERING

STATE / LAKE LOOP ELEVATED STATION
200 NORTH STATE STREET, CHICAGO, IL 60601

SPEC. NO.

BEARING PLAN AND DETAILS 1

DRAWING NO.
S-560

CDOT PROJECT D-1-209

DATE: 7/3/2023

REVISION NO.

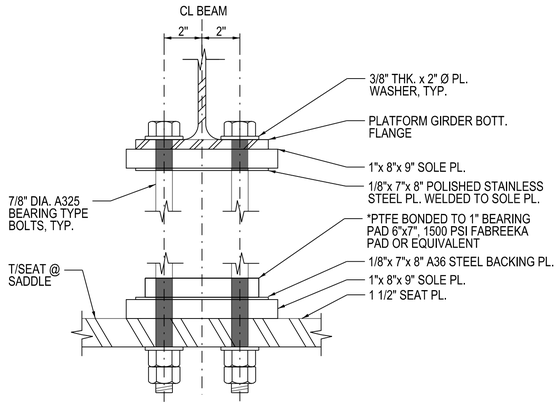

4 EXPANSION BEARING ASSEMBLY - TYPE 4
3" = 1'-0"

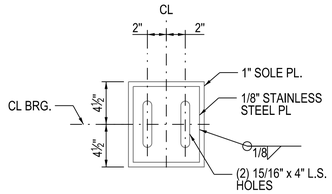

4A TOP ASSEMBLY
1 1/2" = 1'-0"

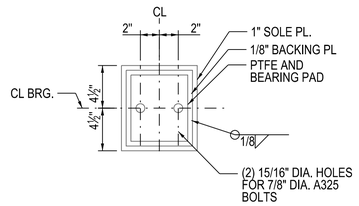

4B BOTTOM ASSEMBLY
1 1/2" = 1'-0"

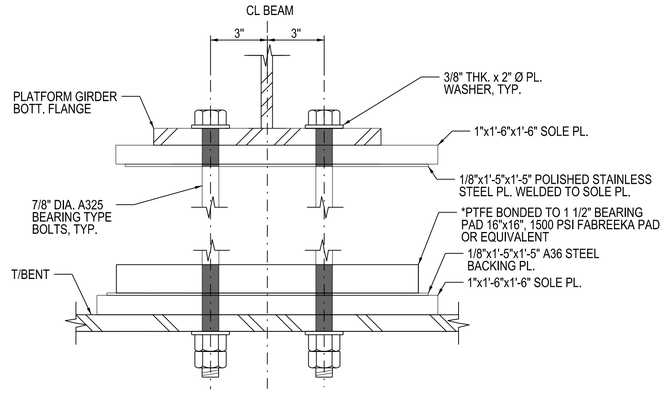

5 EXPANSION BEARING ASSEMBLY - TYPE 5
3" = 1'-0"

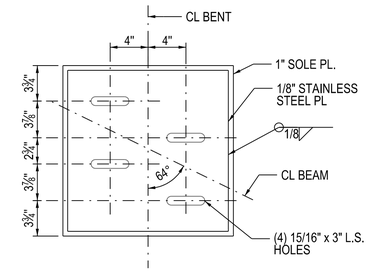

5A TOP ASSEMBLY
1 1/2" = 1'-0"

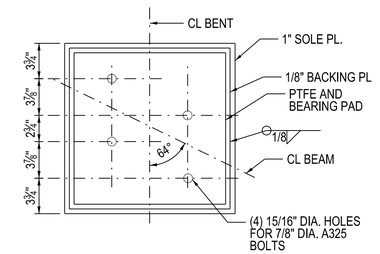

5B BOTTOM ASSEMBLY
1 1/2" = 1'-0"

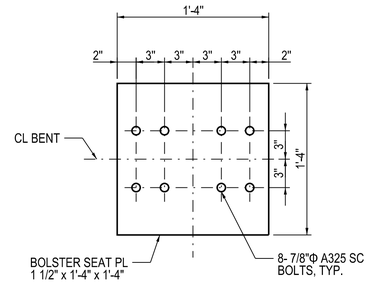

6 PLATFORM FIXED BEARING DETAIL
1-1/2" = 1'-0"

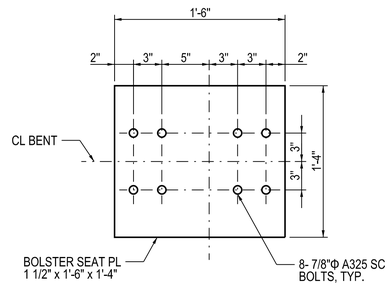

6A PLATFORM FIXED BEARING DETAIL
1-1/2" = 1'-0"

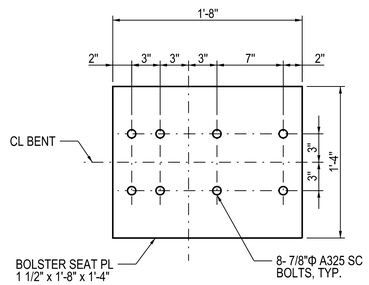

6B PLATFORM FIXED BEARING DETAIL
1-1/2" = 1'-0"

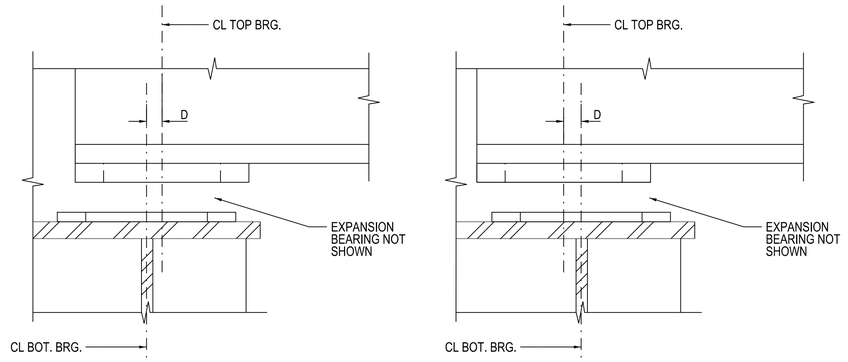

BELOW 50°F **ABOVE 50°F**

7 SETTINGS BOLTS AT EXPANSION BEARING
N.T.S

D = 1/8" PER 100' OF EXPANSION FOR EVERY 15° TEMPERATURE CHANGE FROM THE NORMAL TEMPERATURE OF 50°F

DESIGN BY:	UT								
DRAWN BY:	UT								
CHECKED BY:	JL								
APPROVED BY:	JL	4	7/3/2023	ISSUED FOR BID					
CDOT/APPROVED BY:		NO.	DATE	REVISIONS	DES.	DRW.	CHK.	DCCO	CDOT

TRANSYSTEMS
222 SOUTH RIVERSIDE PLAZA SUITE 610
CHICAGO, ILLINOIS 60606

SKIDMORE, OWINGS & MERRILL LLP
224 SOUTH MICHIGAN AVENUE, SUITE 1000
CHICAGO, ILLINOIS 60604

GARZA KARHOFF ENGINEERING, LLC
120 NORTH LASALLE STREET, SUITE 1400
CHICAGO, ILLINOIS 60602

CHICAGO DEPARTMENT OF TRANSPORTATION
DIVISION OF ENGINEERING

STATE / LAKE LOOP ELEVATED STATION
200 NORTH STATE STREET, CHICAGO, IL 60601

BEARING PLAN AND DETAILS 2

CDOT PROJECT D-1-209 | DATE: 7/3/2023

SPEC. NO.

DRAWING NO. S-561

REVISION NO.

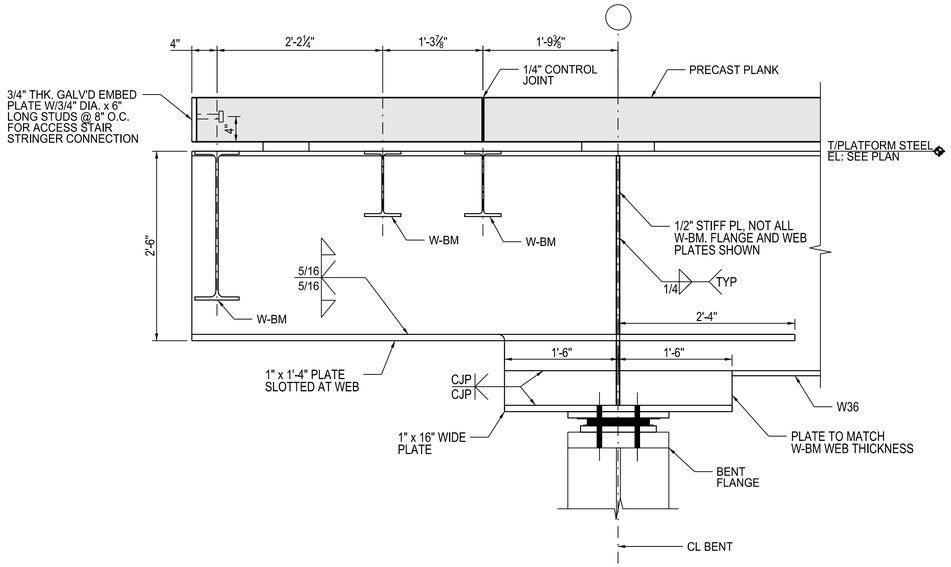

1 PLATFORM EXP. BEARING DETAIL 1
1" = 1'-0"

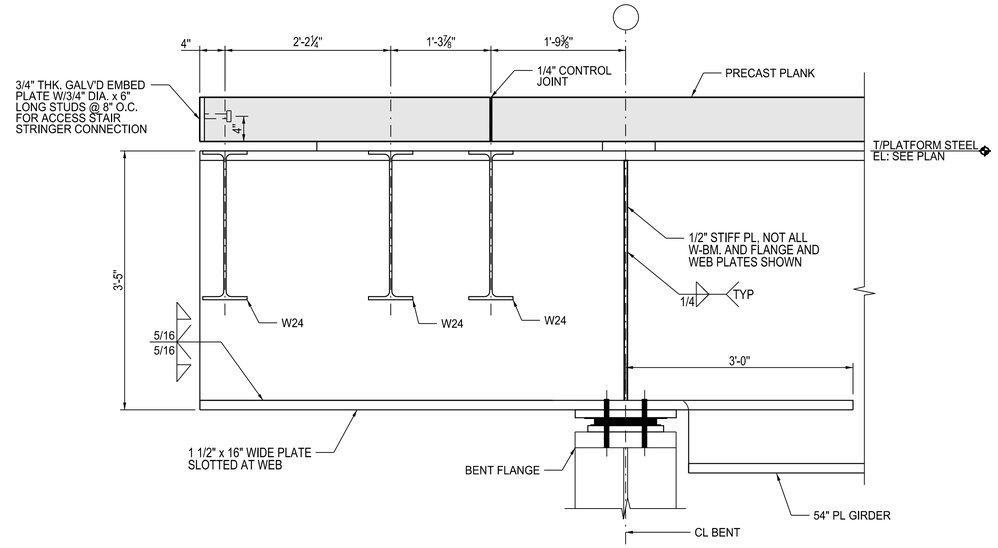

2 PLATFORM EXP. BEARING DETAIL 2
1" = 1'-0"

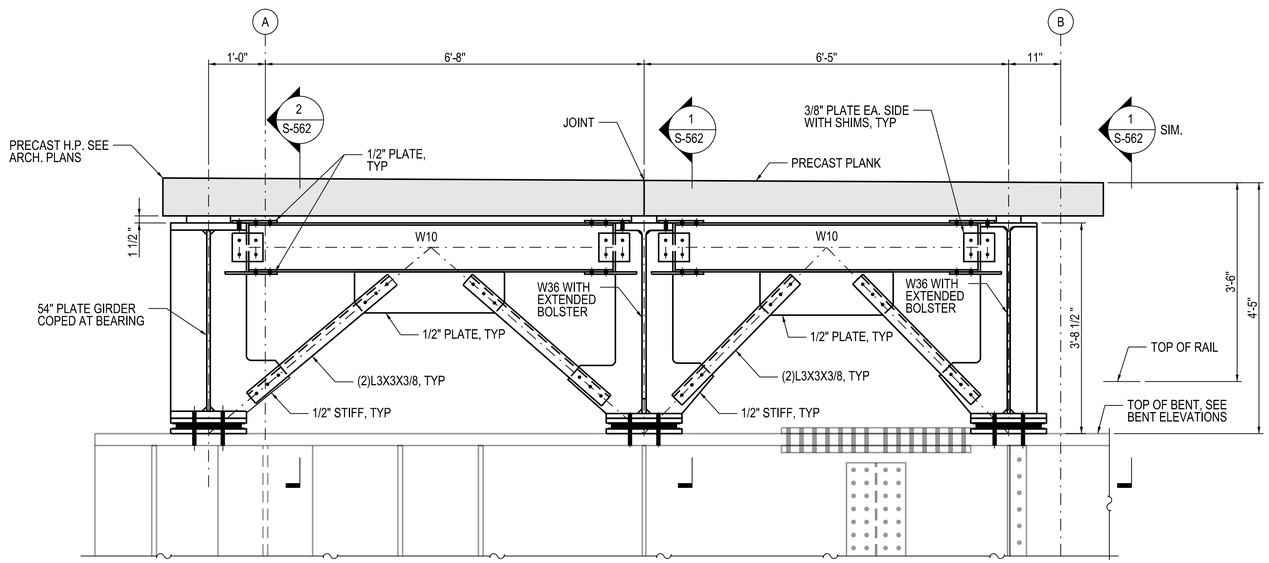

3 BENT 442 SECTION - NORTH PLATFORM
3/4" = 1'-0"

NOTES:
1. TYPICAL DIAPHGRAM BRACING SECTION FOR DETAILS NOT SHOWN HERE, SEE SHEET S-573

DESIGN BY:	EG/UT								
DRAWN BY:	EG/UT								
CHECKED BY:	JL								
APPROVED BY:	JL	4	7/3/2023	ISSUED FOR BID					
CDOT/APPROVED BY:		NO.	DATE	REVISIONS	DES.	DRW.	CHK.	DCCO	CDOT

TRANSYSTEMS
222 SOUTH RIVERSIDE PLAZA SUITE 610
CHICAGO, ILLINOIS 60606

SKIDMORE, OWINGS & MERRILL LLP
224 SOUTH MICHIGAN AVENUE, SUITE 1000
CHICAGO, ILLINOIS 60604

GARZA KARHOFF ENGINEERING, LLC
120 NORTH LASALLE STREET, SUITE 1400
CHICAGO, ILLINOIS 60602

CHICAGO DEPARTMENT OF TRANSPORTATION
DIVISION OF ENGINEERING

STATE / LAKE LOOP ELEVATED STATION
200 NORTH STATE STREET, CHICAGO, IL 60601

BENT 442 PLATFORM SECTIONS & DETAILS

CDOT PROJECT D-1-209

DATE: 7/3/2023

SPEC. NO.

DRAWING NO. S-562

REVISION NO.

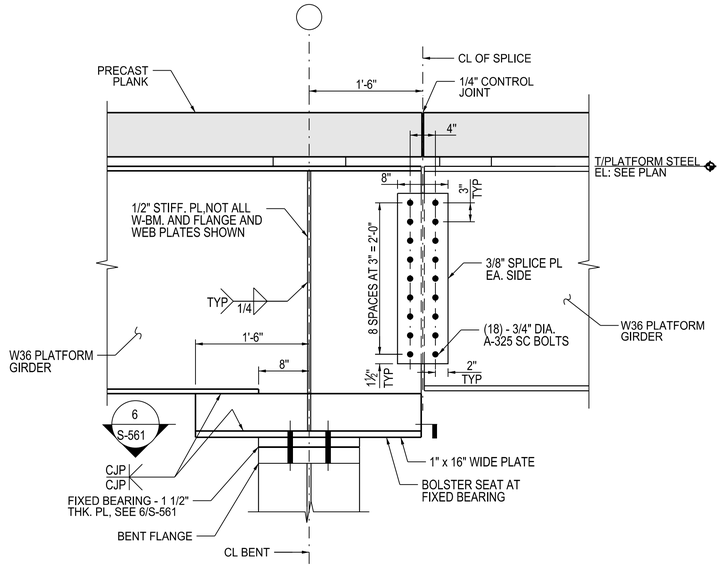

1 PLATFORM FIXED BEARING DETAIL 1

1" = 1'-0"

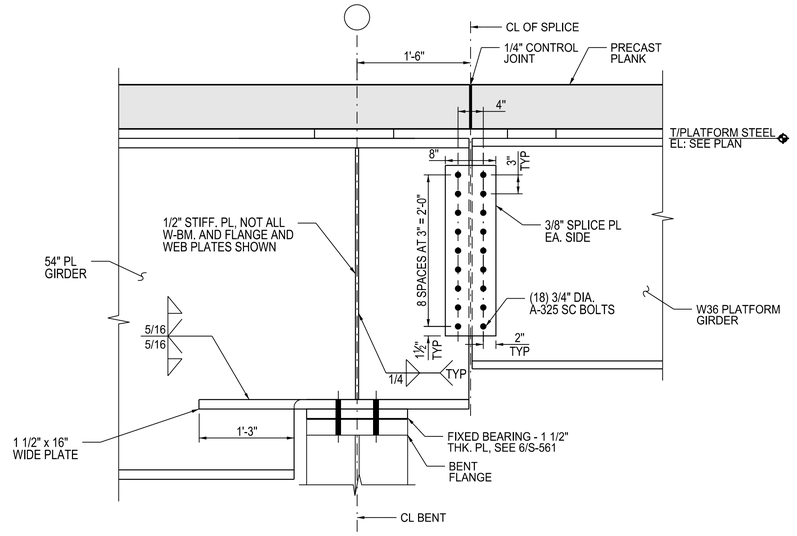

2 PLATFORM FIXED BEARING DETAIL 2

1" = 1'-0"

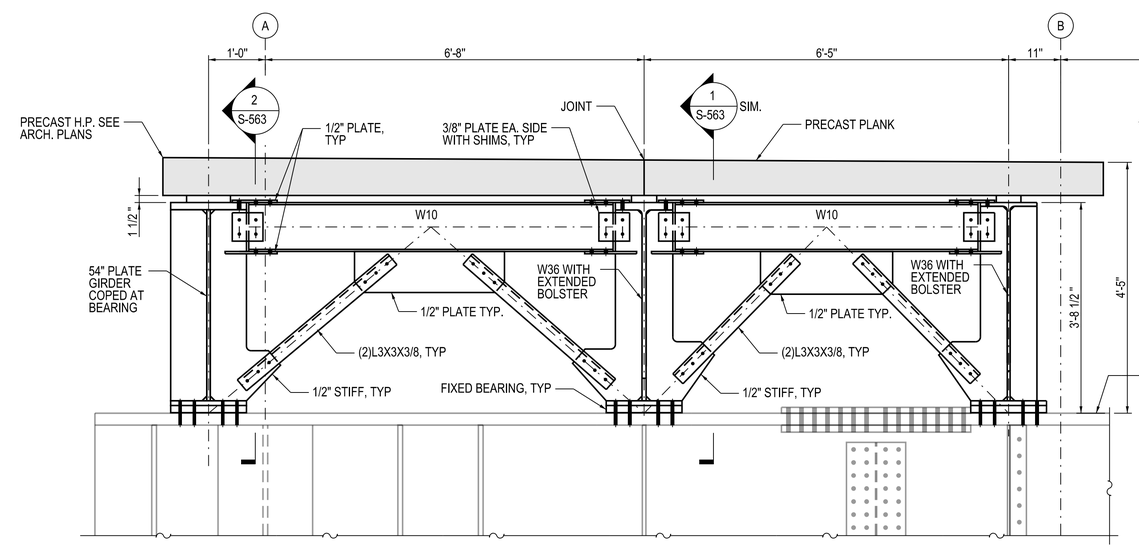

3 BENT 443 SECTION - NORTH PLATFORM

3/4" = 1'-0"

NOTES:
1. TYPICAL DIAPHGRAM BRACING SECTION FOR DETAILS NOT SHOWN HERE, SEE SHEET S-573

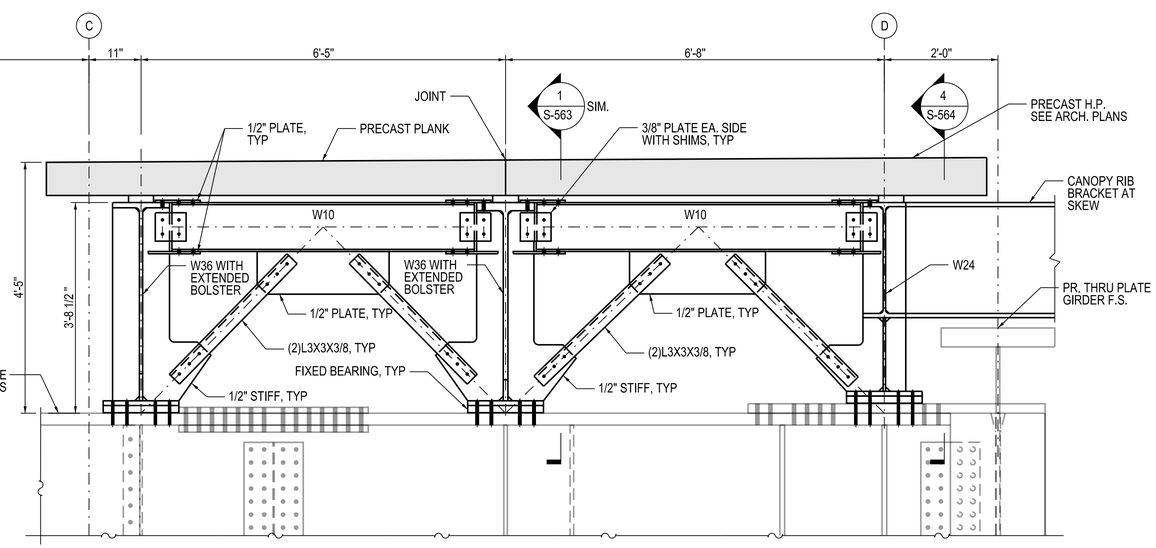

4 BENT 443 SECTION - SOUTH PLATFORM

3/4" = 1'-0"

NOTES:
1. SEE TYPICAL DIAPHGRAM BRACING SECTION FOR DETAILS NOT SHOWN HERE. SHEET S-573

DESIGN BY:	EG								
DRAWN BY:	EG								
CHECKED BY:	JL								
APPROVED BY:	JL	4	7/3/2023	ISSUED FOR BID					
CDOT/APPROVED BY:		NO.	DATE	REVISIONS	DES.	DRW.	CHK.	DCCO	CDOT

TRANSYSTEMS
222 SOUTH RIVERSIDE PLAZA SUITE 610
CHICAGO, ILLINOIS 60606

SKIDMORE, OWINGS & MERRILL LLP
224 SOUTH MICHIGAN AVENUE, SUITE 1000
CHICAGO, ILLINOIS 60604

GARZA KARHOFF ENGINEERING, LLC
120 NORTH LASALLE STREET, SUITE 1400
CHICAGO, ILLINOIS 60602

CHICAGO DEPARTMENT OF TRANSPORTATION
DIVISION OF ENGINEERING

STATE / LAKE LOOP ELEVATED STATION
200 NORTH STATE STREET, CHICAGO, IL 60601

BENT 443 PLATFORM SECTIONS & DETAILS

CDOT PROJECT D-1-209

DATE: 7/3/2023

SPEC. NO.

DRAWING NO. S-563

REVISION NO.

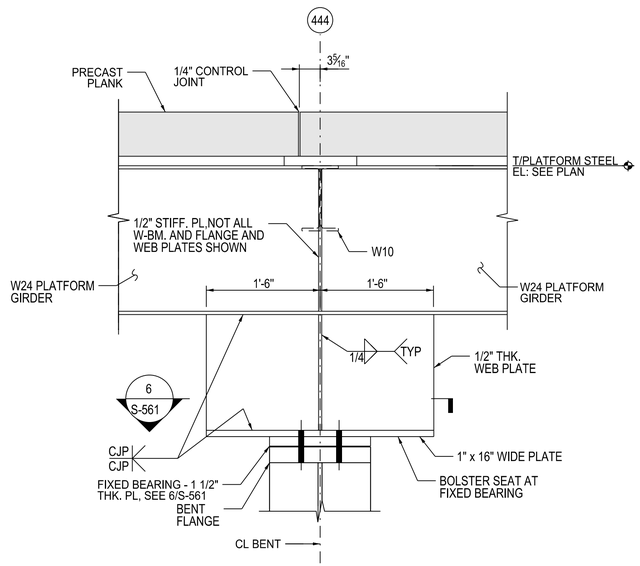

3 PLATFORM FIXED BEARING DETAIL 1

1" = 1'-0"

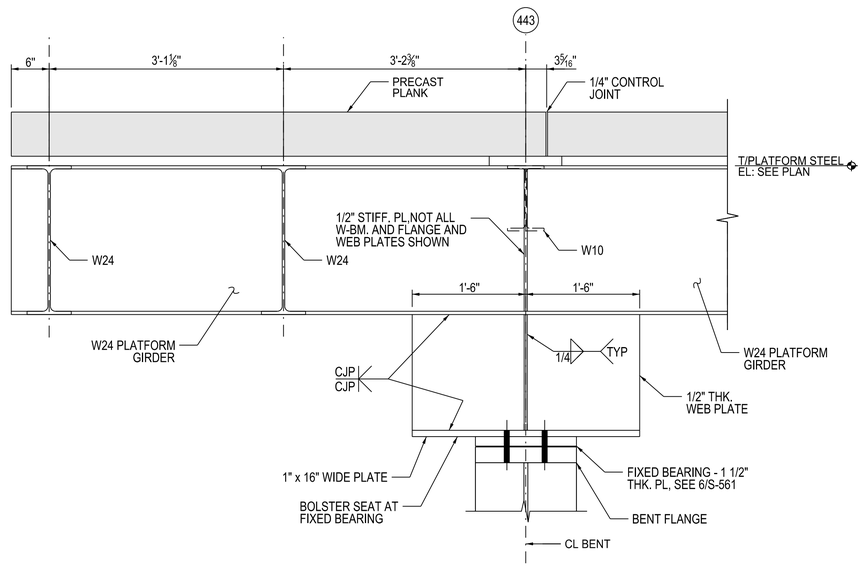

4 PLATFORM FIXED BEARING DETAIL 2

1" = 1'-0"

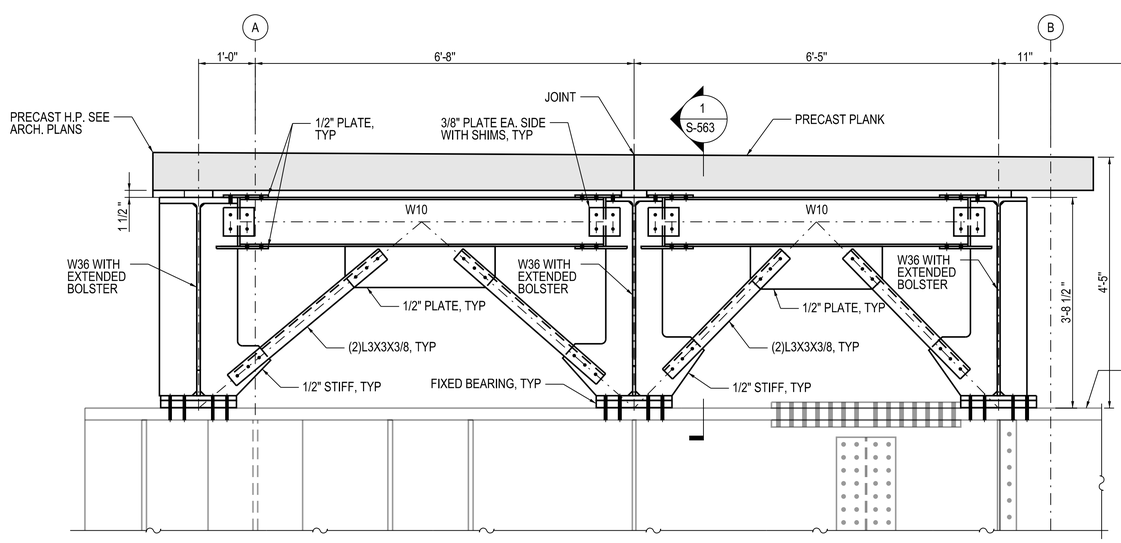

1 BENT 444 SECTION - NORTH PLATFORM

3/4" = 1'-0"

NOTES:
1. TYPICAL DIAPHGRAM BRACING SECTION FOR DETAILS NOT SHOWN HERE, SEE SHEET S-573

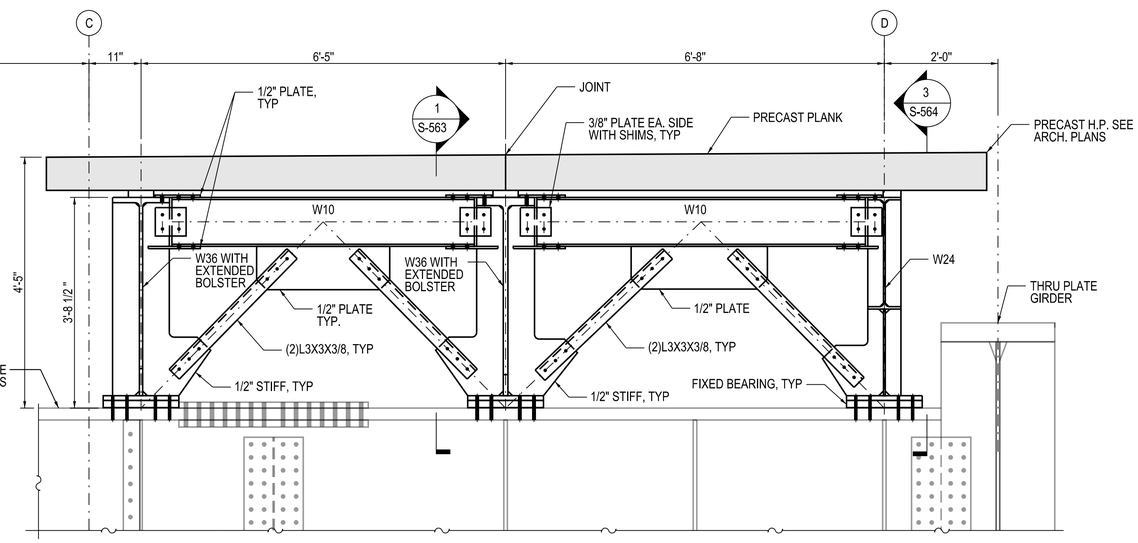

2 BENT 444 SECTION - SOUTH PLATFORM

3/4" = 1'-0"

NOTES:
1. TYPICAL DIAPHGRAM BRACING SECTION FOR DETAILS NOT SHOWN HERE, SEE SHEET S-573

DESIGN BY:	EG								
DRAWN BY:	EG								
CHECKED BY:	JL								
APPROVED BY:	JL	4	7/3/2023	ISSUED FOR BID					
CDOT/APPROVED BY:		NO.	DATE	REVISIONS	DES.	DRW.	CHK.	DCCO	CDOT

TRANSYSTEMS
222 SOUTH RIVERSIDE PLAZA SUITE 610
CHICAGO, ILLINOIS 60606

SKIDMORE, OWINGS & MERRILL LLP
224 SOUTH MICHIGAN AVENUE, SUITE 1000
CHICAGO, ILLINOIS 60604

GARZA KARHOFF ENGINEERING, LLC
120 NORTH LASALLE STREET, SUITE 1400
CHICAGO, ILLINOIS 60602

CHICAGO DEPARTMENT OF TRANSPORTATION
DIVISION OF ENGINEERING

STATE / LAKE LOOP ELEVATED STATION
200 NORTH STATE STREET, CHICAGO, IL 60601

BENT 444 PLATFORM SECTIONS & DETAILS

CDOT PROJECT D-1-209

DATE: 7/3/2023

SPEC. NO.

DRAWING NO. S-564

REVISION NO.

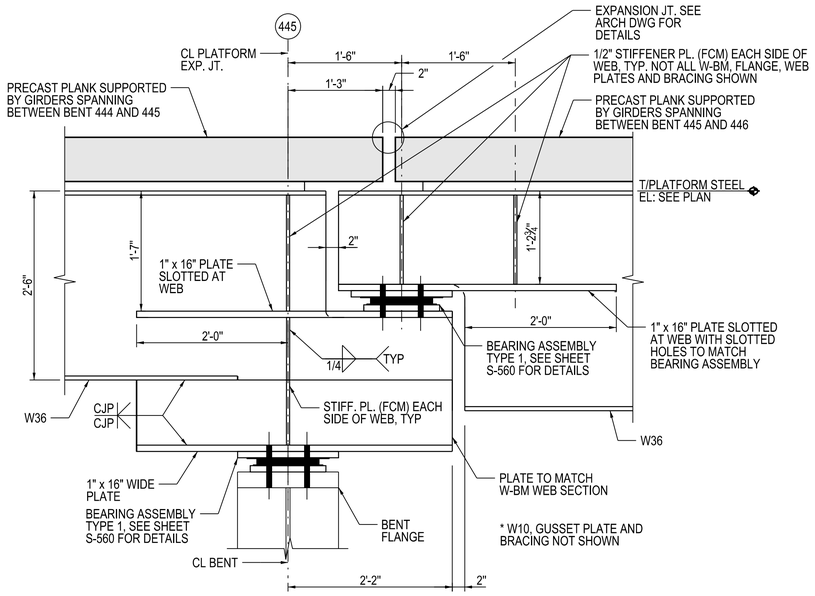

1 PLATFORM EXP. BEARING DETAIL 1
1" = 1'-0"

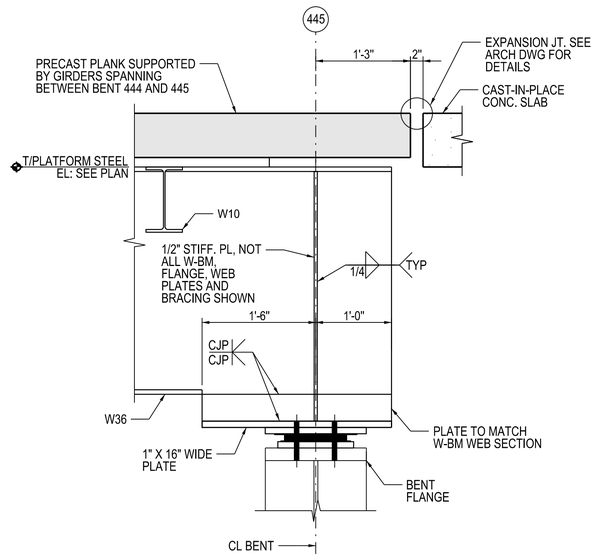

2 PLATFORM EXP. BEARING DETAIL 2
1" = 1'-0"

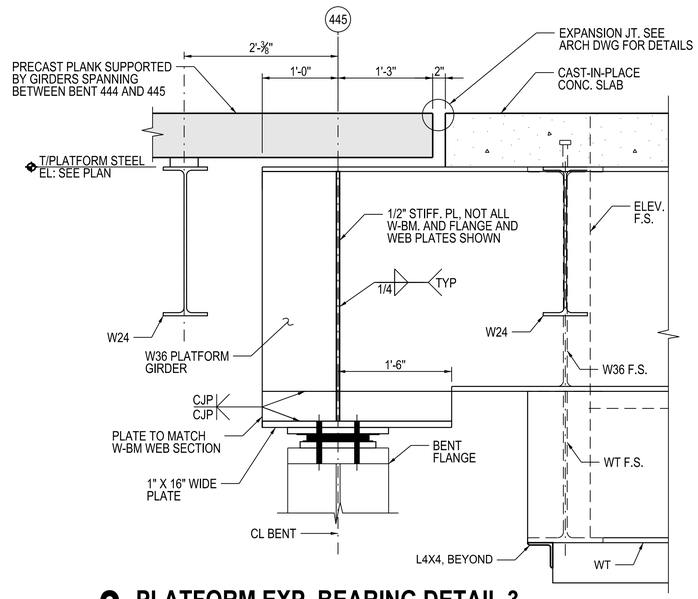

3 PLATFORM EXP. BEARING DETAIL 3
1" = 1'-0"

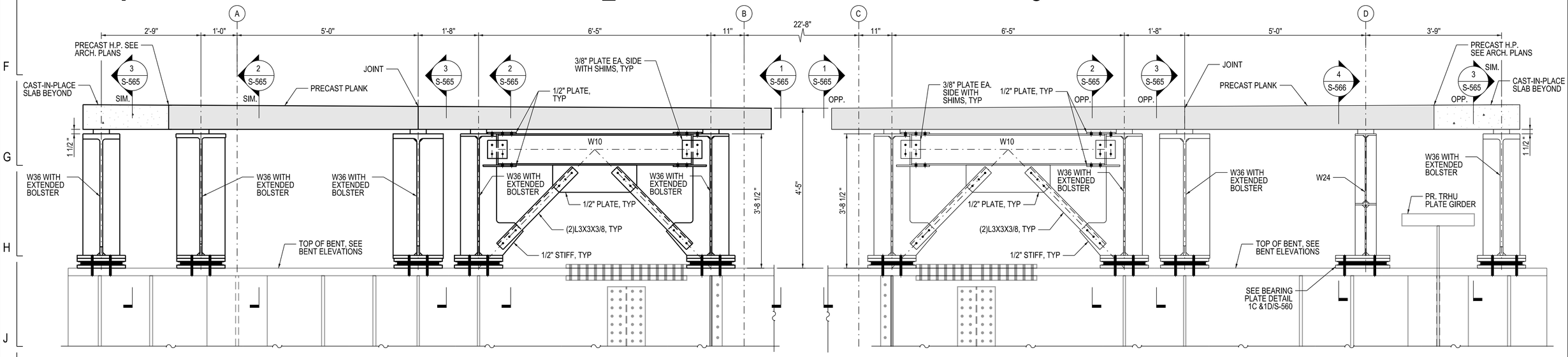

4 BENT 445 SECTION - NORTH PLATFORM
3/4" = 1'-0"

NOTES:
1. TYPICAL DIAPHGRAM BRACING SECTION FOR DETAILS NOT SHOWN HERE, SEE SHEET S-573

5 BENT 445 SECTION - SOUTH PLATFORM
3/4" = 1'-0"

NOTES:
1. TYPICAL DIAPHGRAM BRACING SECTION FOR DETAILS NOT SHOWN HERE, SEE SHEET S-573

DESIGN BY:	EG/UT								
DRAWN BY:	EG/UT								
CHECKED BY:	JL								
APPROVED BY:	JL	4	7/3/2023	ISSUED FOR BID					
CDOT/APPROVED BY:		NO.	DATE	REVISIONS	DES.	DRW.	CHK.	DCCO	CDOT

TRANSYSTEMS
222 SOUTH RIVERSIDE PLAZA SUITE 610
CHICAGO, ILLINOIS 60606

SKIDMORE, OWINGS & MERRILL LLP
224 SOUTH MICHIGAN AVENUE, SUITE 1000
CHICAGO, ILLINOIS 60604

GARZA KARHOFF ENGINEERING, LLC
120 NORTH LASALLE STREET, SUITE 1400
CHICAGO, ILLINOIS 60602

CHICAGO DEPARTMENT OF TRANSPORTATION
DIVISION OF ENGINEERING

STATE / LAKE LOOP ELEVATED STATION
200 NORTH STATE STREET, CHICAGO, IL 60601

BENT 445 PLATFORM SECTIONS & DETAILS

CDOT PROJECT D-1-209

DATE: 7/3/2023

SPEC. NO.

DRAWING NO. S-565

REVISION NO.

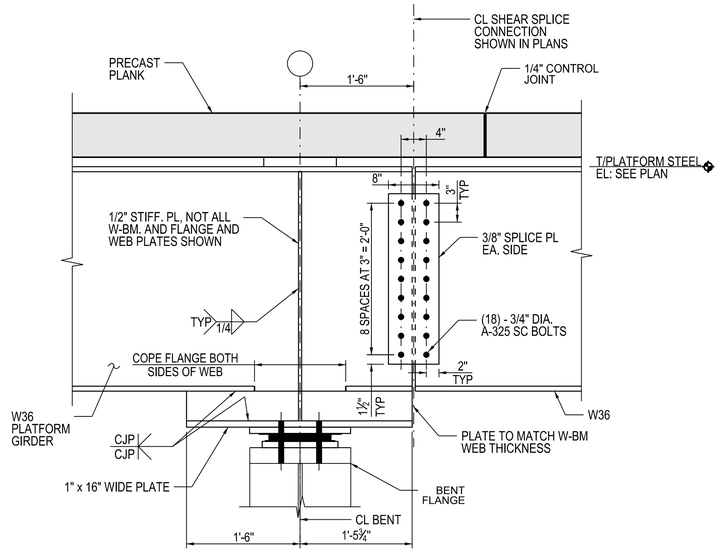

1 PLATFORM EXP. BEARING DETAIL 1

1" = 1'-0"

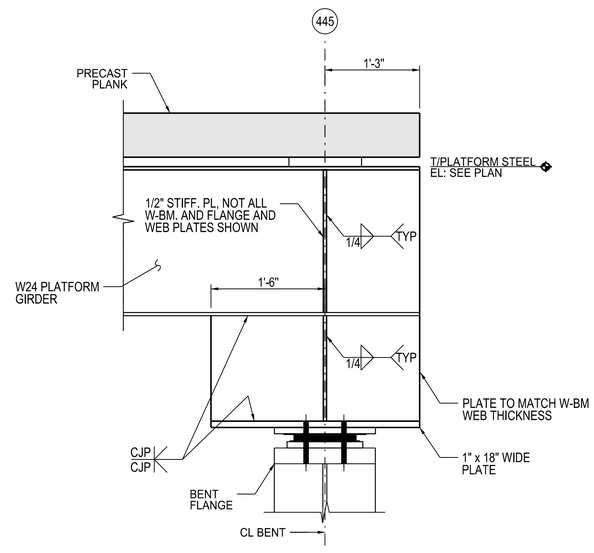

4 PLATFORM EXP. BEARING DETAIL 2

1" = 1'-0"

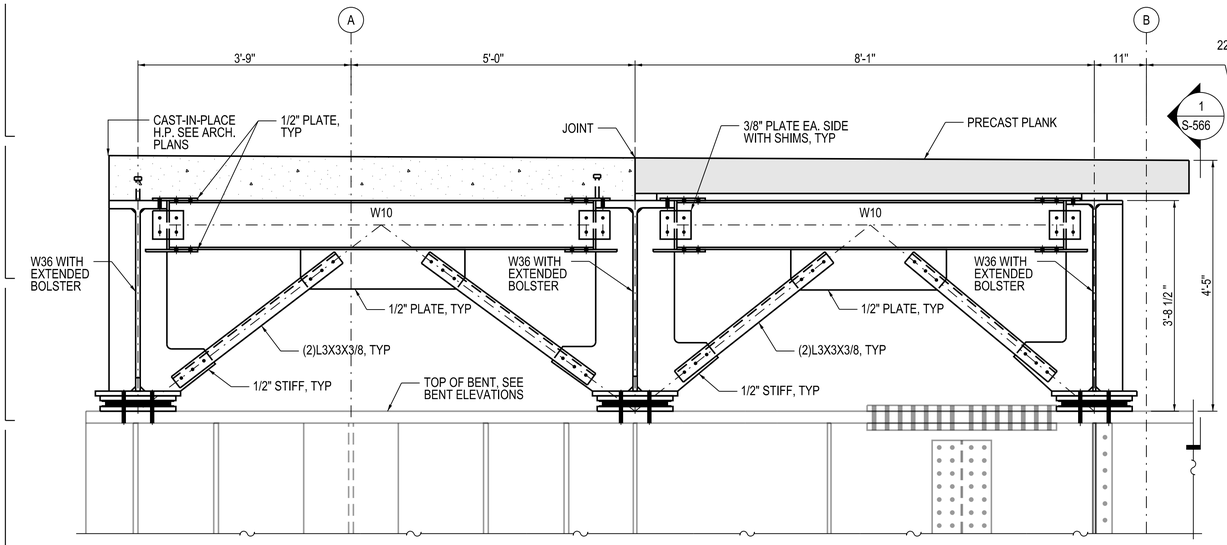

2 BENT 446 SECTION - NORTH PLATFORM

3/4" = 1'-0"

NOTES:
1. TYPICAL DIAPHGRAM BRACING SECTION FOR DETAILS NOT SHOWN HERE, SEE SHEET S-573
2. SECTION CUT 1/S-566 IS TYPICAL AT ALL GIRDERS

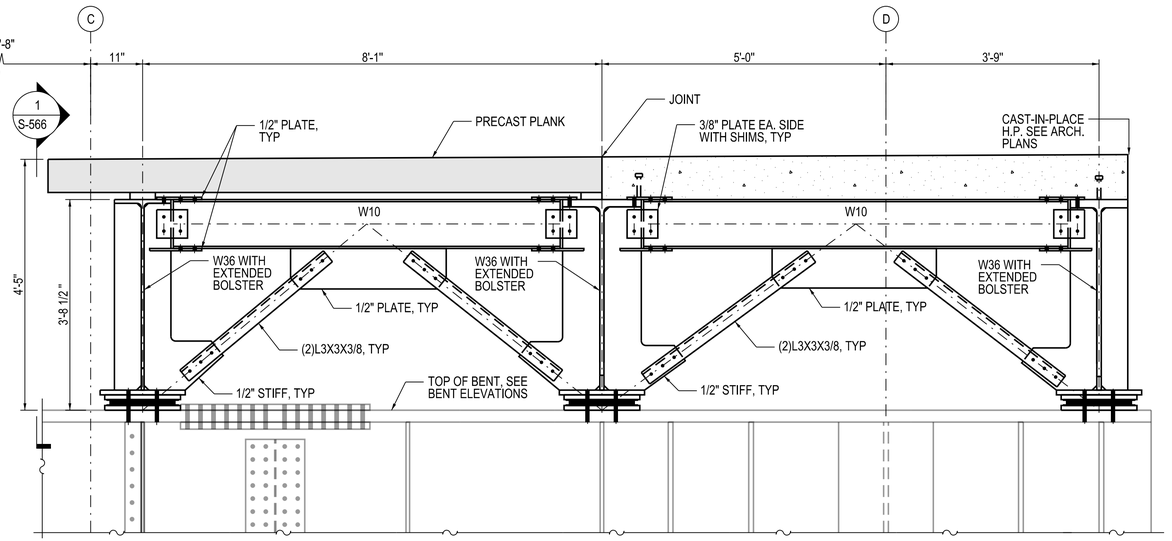

3 BENT 446 SECTION - SOUTH PLATFORM

3/4" = 1'-0"

NOTES:
1. TYPICAL DIAPHGRAM BRACING SECTION FOR DETAILS NOT SHOWN HERE, SEE SHEET S-573
2. SECTION CUT 1/S-566 IS TYPICAL AT ALL GIRDERS

DESIGN BY:	EG/UT								
DRAWN BY:	EG/UT								
CHECKED BY:	JL								
APPROVED BY:	JL	4	7/3/2023	ISSUED FOR BID					
CDOT/APPROVED BY:		NO.	DATE	REVISIONS	DES.	DRW.	CHK.	DCCO	CDOT

TRANSYSTEMS
222 SOUTH RIVERSIDE PLAZA SUITE 610
CHICAGO, ILLINOIS 60606

SKIDMORE, OWINGS & MERRILL LLP
224 SOUTH MICHIGAN AVENUE, SUITE 1000
CHICAGO, ILLINOIS 60604

GARZA KARHOFF ENGINEERING, LLC
120 NORTH LASALLE STREET, SUITE 1400
CHICAGO, ILLINOIS 60602

CHICAGO DEPARTMENT OF TRANSPORTATION
DIVISION OF ENGINEERING

STATE / LAKE LOOP ELEVATED STATION
200 NORTH STATE STREET, CHICAGO, IL 60601

BENT 446 PLATFORM SECTIONS & DETAILS

CDOT PROJECT D-1-209

DATE: 7/3/2023

SPEC. NO.

DRAWING NO. S-566

REVISION NO.

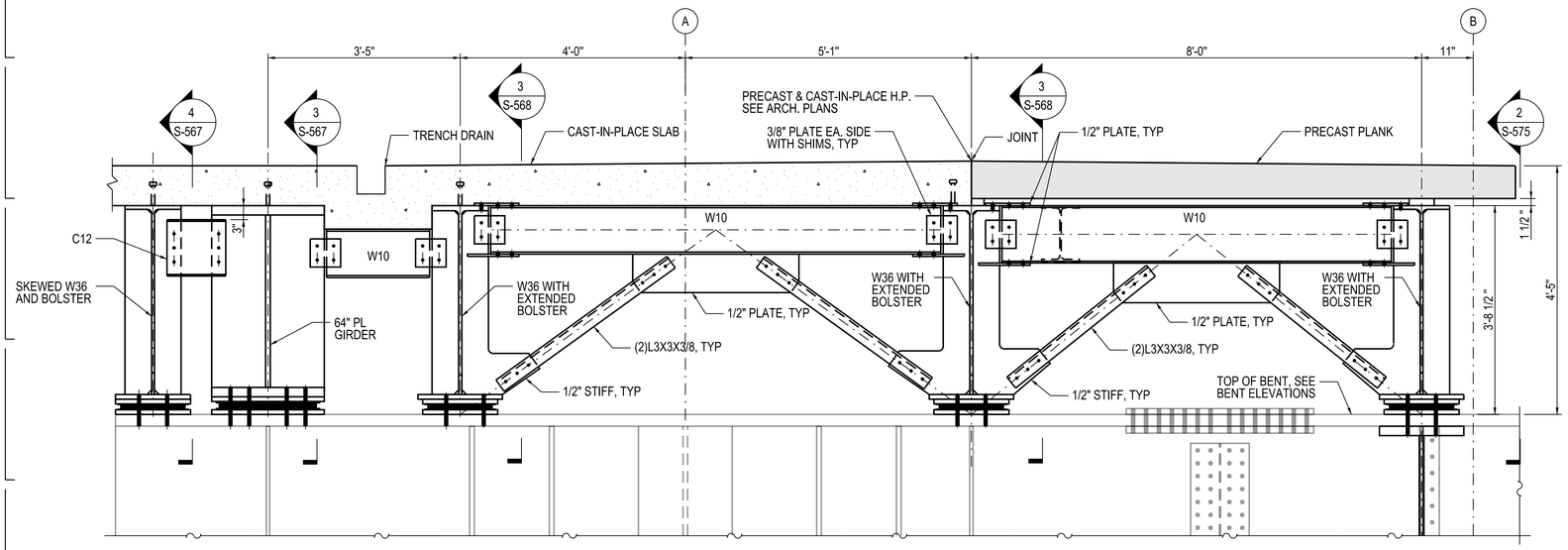

1 BENT 447 SECTION - NORTH PLATFORM

3/4" = 1'-0"

NOTES:
1. TYPICAL DIAPHGRAM BRACING SECTION FOR DETAILS NOT SHOWN HERE, SEE SHEET S-573

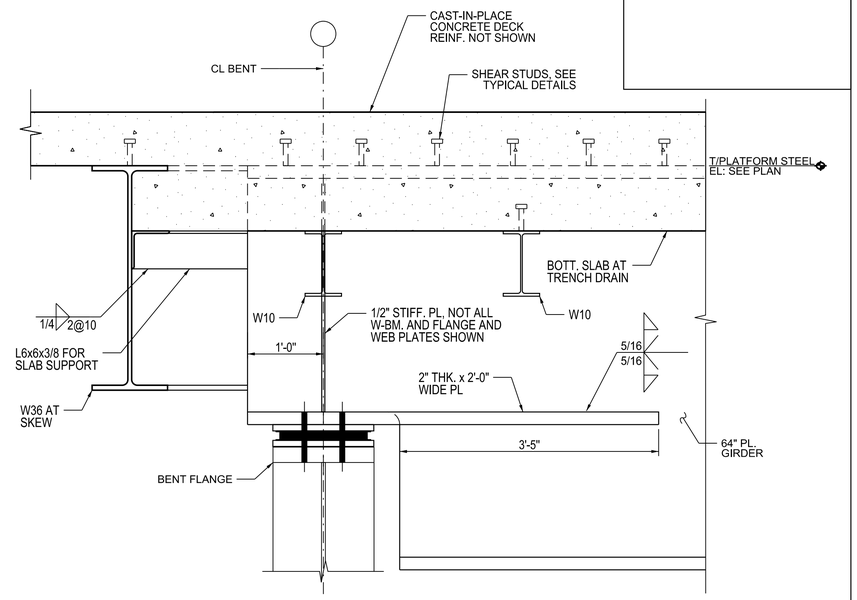

3 PLATFORM EXP. BEARING DETAIL

1" = 1'-0"

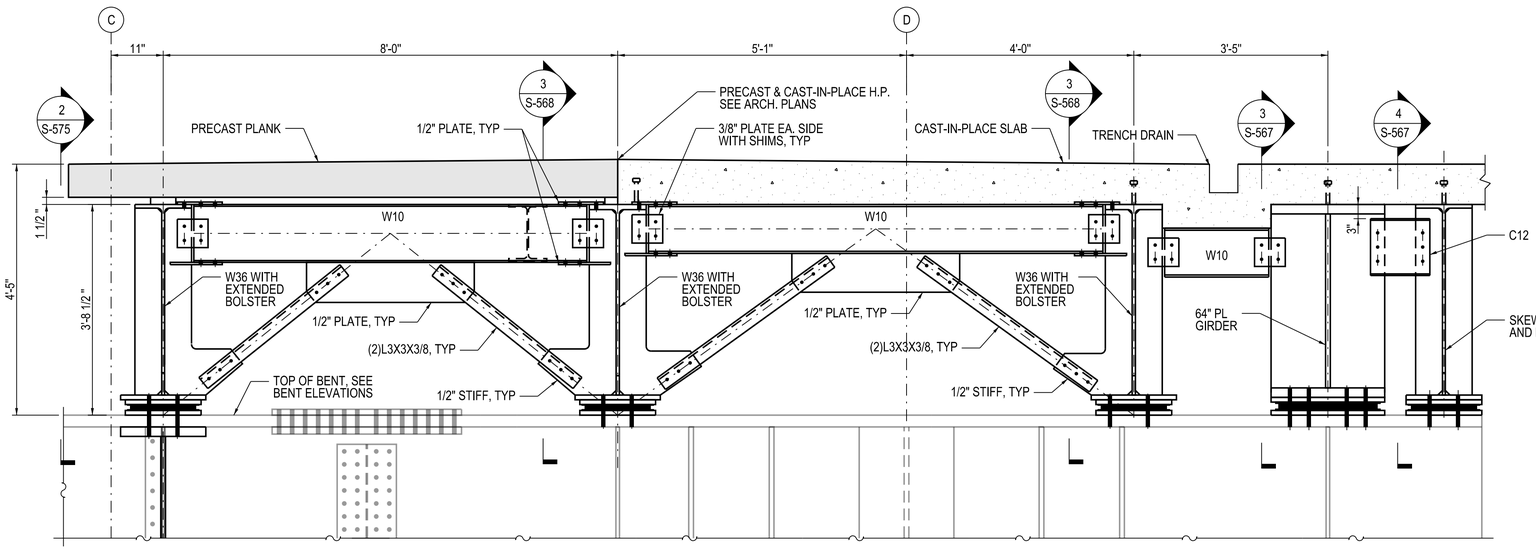

2 BENT 447 SECTION - SOUTH PLATFORM

3/4" = 1'-0"

NOTES:
1. TYPICAL DIAPHGRAM BRACING SECTION FOR DETAILS NOT SHOWN HERE, SEE SHEET S-573

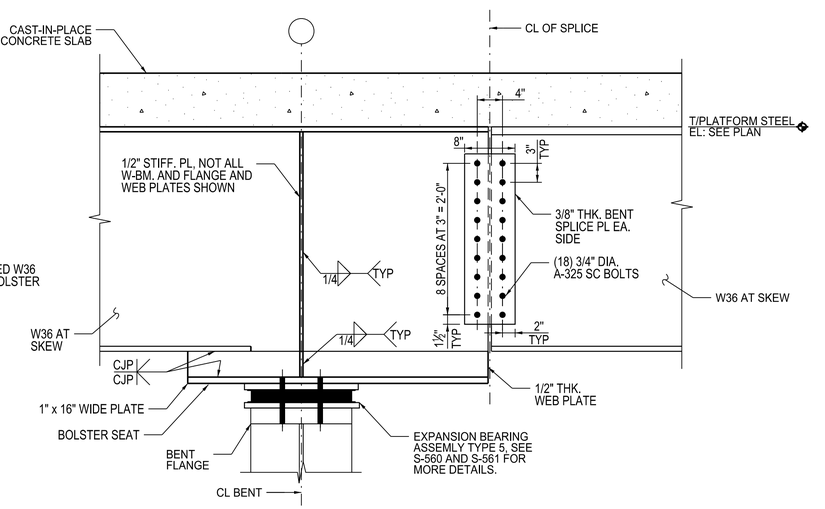

4 PLATFORM EXP. BEARING DETAIL

1" = 1'-0"

DESIGN BY:	EG/UT								
DRAWN BY:	EG/UT								
CHECKED BY:	JL								
APPROVED BY:	JL	4	7/3/2023	ISSUED FOR BID					
CDOT/APPROVED BY:		NO.	DATE	REVISIONS	DES.	DRW.	CHK.	DCCO	CDOT

TRANSYSTEMS
222 SOUTH RIVERSIDE PLAZA SUITE 610
CHICAGO, ILLINOIS 60606

SKIDMORE, OWINGS & MERRILL LLP
224 SOUTH MICHIGAN AVENUE, SUITE 1000
CHICAGO, ILLINOIS 60604

GARZA KARHOFF ENGINEERING, LLC
120 NORTH LASALLE STREET, SUITE 1400
CHICAGO, ILLINOIS 60602

CHICAGO DEPARTMENT OF TRANSPORTATION
DIVISION OF ENGINEERING

STATE / LAKE LOOP ELEVATED STATION
200 NORTH STATE STREET, CHICAGO, IL 60601

BENT 447 PLATFORM SECTIONS & DETAILS

CDOT PROJECT D-1-209

DATE: 7/3/2023

SPEC. NO.

DRAWING NO. S-567

REVISION NO.

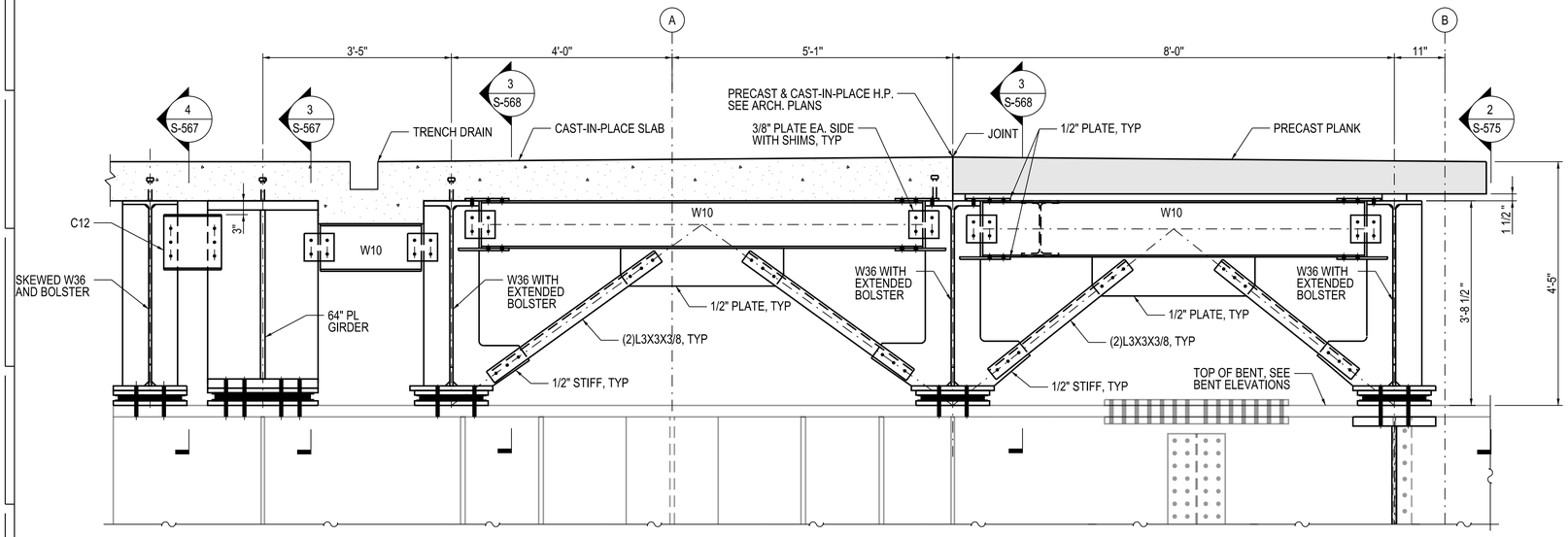

1 BENT 449 SECTION - NORTH PLATFORM

3/4" = 1'-0"

NOTES:
1. TYPICAL DIAPHGRAM BRACING SECTION FOR DETAILS NOT SHOWN HERE, SEE SHEET S-573

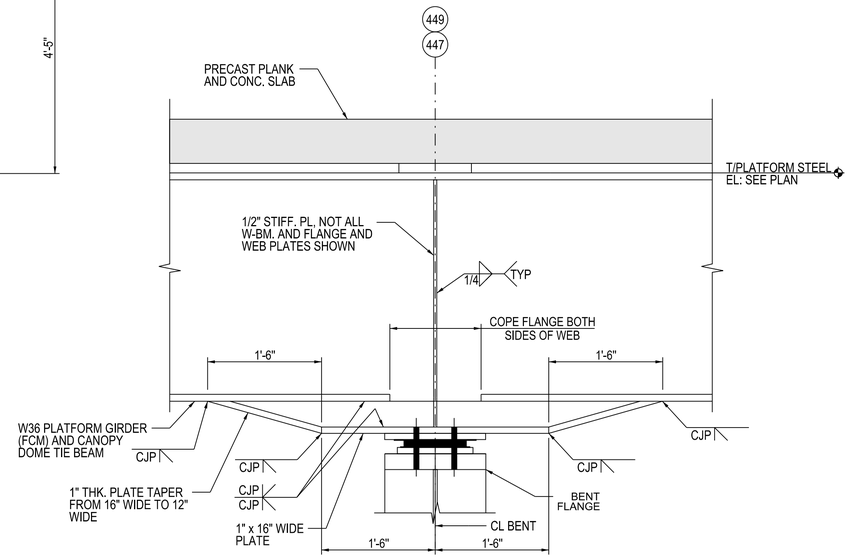

3 PLATFORM EXP. BEARING DETAIL

1" = 1'-0"

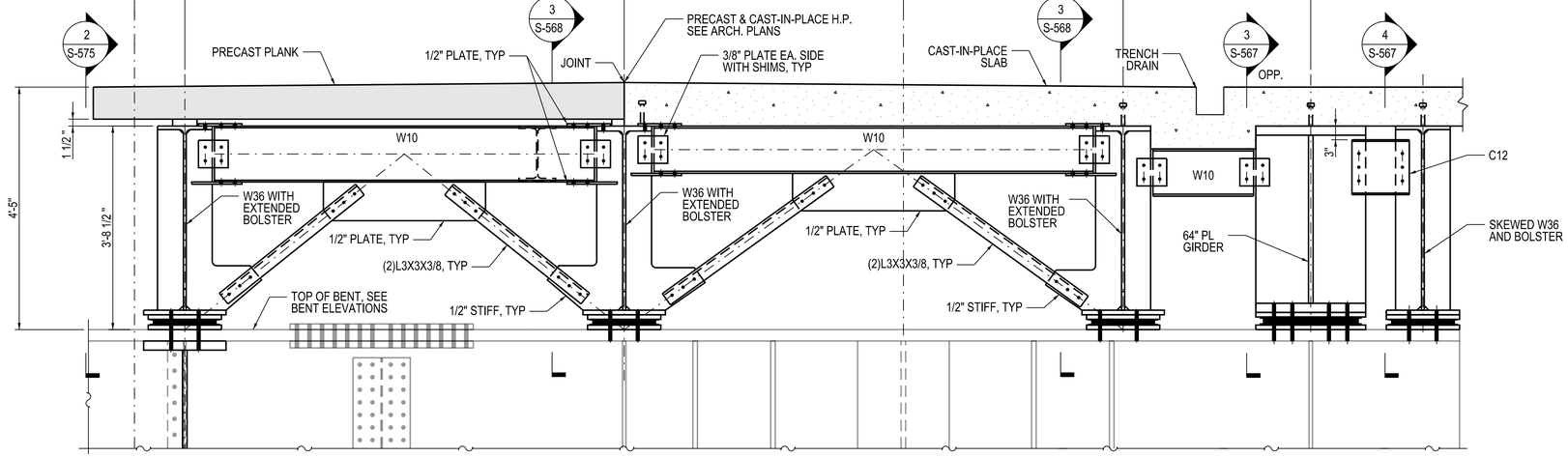

2 BENT 449 SECTION - SOUTH PLATFORM

3/4" = 1'-0"

NOTES:
1. TYPICAL DIAPHGRAM BRACING SECTION FOR DETAILS NOT SHOWN HERE, SEE SHEET S-573

DESIGN BY:	EG								
DRAWN BY:	EG								
CHECKED BY:	JL								
APPROVED BY:	JL	4	7/3/2023	ISSUED FOR BID					
CDOT/APPROVED BY:		NO.	DATE	REVISIONS	DES.	DRW.	CHK.	DCCO	CDOT

TRANSYSTEMS
222 SOUTH RIVERSIDE PLAZA SUITE 610
CHICAGO, ILLINOIS 60606

SKIDMORE, OWINGS & MERRILL LLP
224 SOUTH MICHIGAN AVENUE, SUITE 1000
CHICAGO, ILLINOIS 60604

GARZA KARHOFF ENGINEERING, LLC
120 NORTH LASALLE STREET, SUITE 1400
CHICAGO, ILLINOIS 60602

CHICAGO DEPARTMENT OF TRANSPORTATION
DIVISION OF ENGINEERING

STATE / LAKE LOOP ELEVATED STATION
200 NORTH STATE STREET, CHICAGO, IL 60601

BENT 449 PLATFORM SECTIONS & DETAILS

CDOT PROJECT D-1-209

DATE: 7/3/2023

SPEC. NO.

DRAWING NO. S-568

REVISION NO.

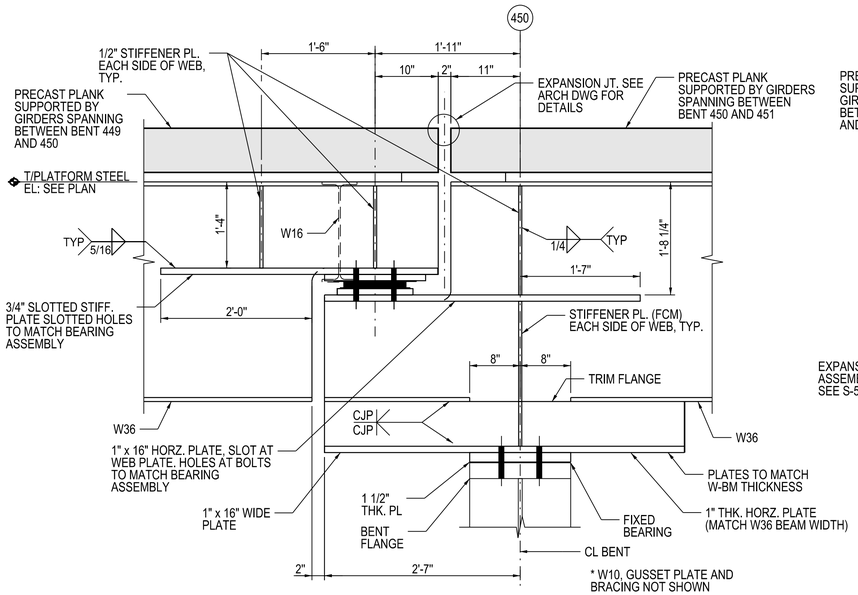

1 PLATFORM DETAIL 1
1" = 1'-0"

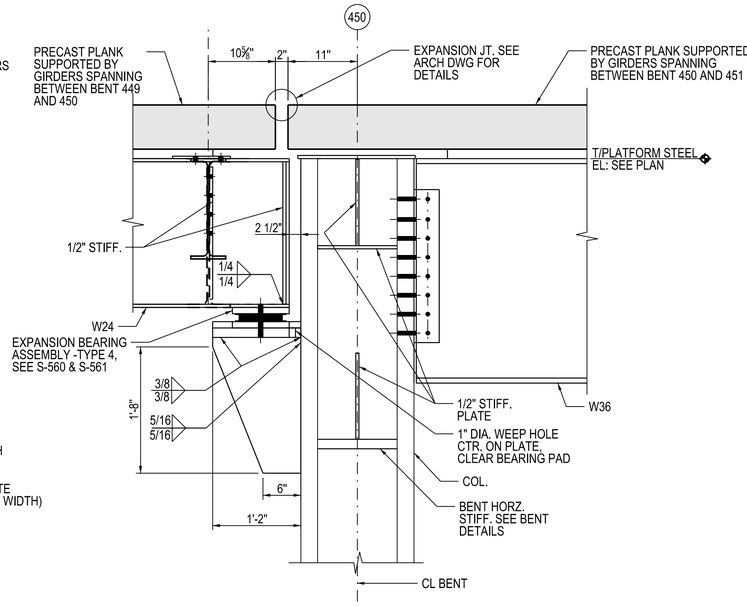

2 PLATFORM DETAIL 2
1" = 1'-0"

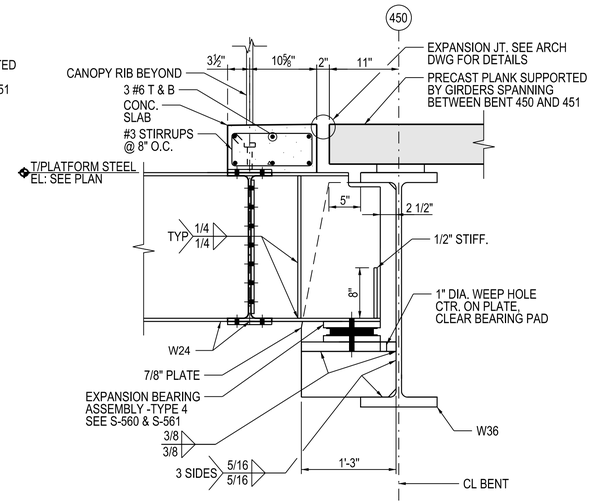

3 PLATFORM DETAIL 3
1" = 1'-0"

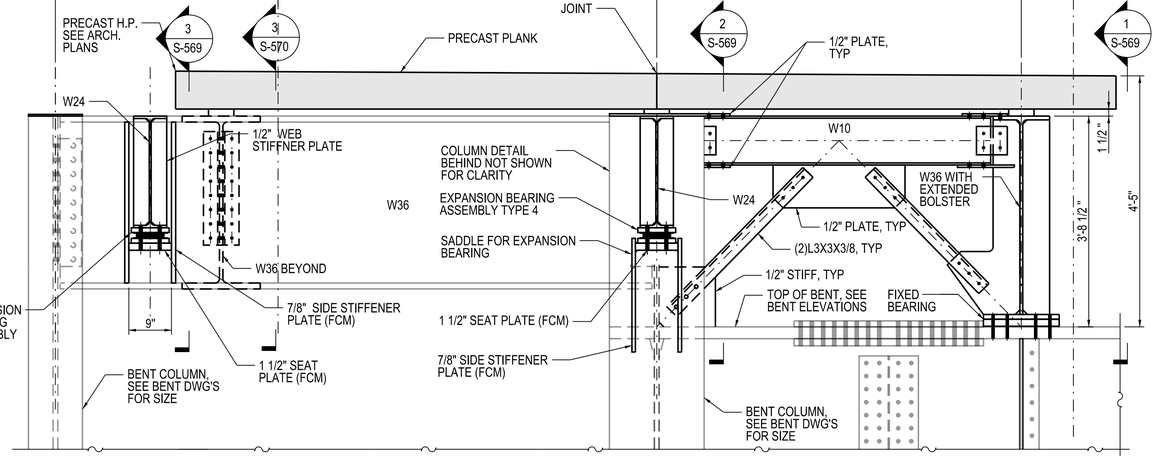

4 BENT 450 SECTION - NORTH PLATFORM
3/4" = 1'-0"

NOTES:
1. TYPICAL DIAPHGRAM BRACING SECTION FOR DETAILS NOT SHOWN HERE, SEE SHEET S-573

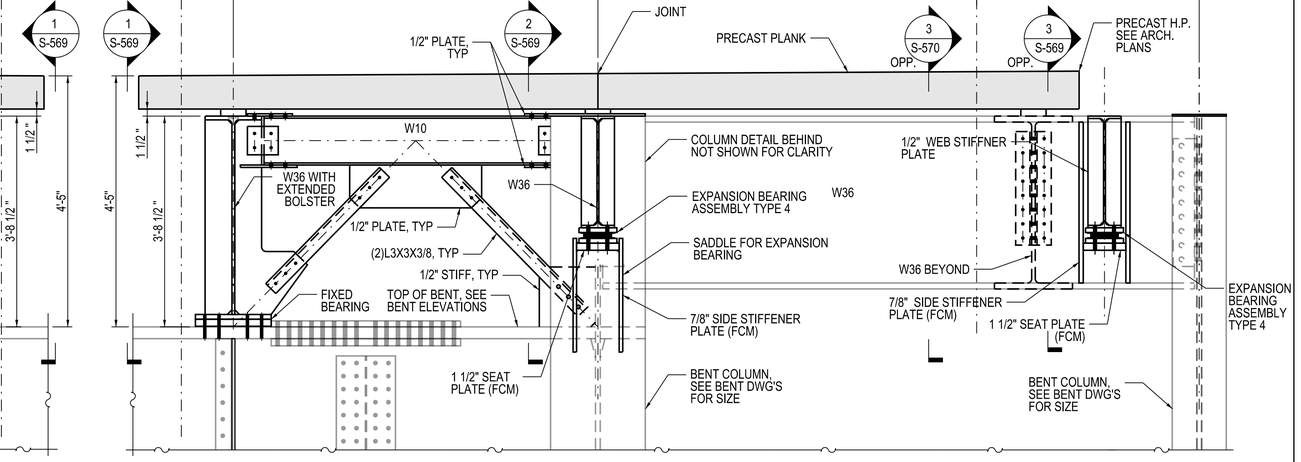

5 BENT 450 SECTION - SOUTH PLATFORM
3/4" = 1'-0"

NOTES:
1. TYPICAL DIAPHGRAM BRACING SECTION FOR DETAILS NOT SHOWN HERE, SEE SHEET S-573

DESIGN BY:	EG/UT								
DRAWN BY:	EG/UT								
CHECKED BY:	JL								
APPROVED BY:	JL	4	7/3/2023	ISSUED FOR BID					
CDOT/APPROVED BY:		NO.	DATE	REVISIONS	DES.	DRW.	CHK.	DCCO	CDOT

TRANSYSTEMS
222 SOUTH RIVERSIDE PLAZA SUITE 610
CHICAGO, ILLINOIS 60606

SKIDMORE, OWINGS & MERRILL LLP
224 SOUTH MICHIGAN AVENUE, SUITE 1000
CHICAGO, ILLINOIS 60604

GARZA KARHOFF ENGINEERING, LLC
120 NORTH LASALLE STREET, SUITE 1400
CHICAGO, ILLINOIS 60602

CHICAGO DEPARTMENT OF TRANSPORTATION
DIVISION OF ENGINEERING

STATE / LAKE LOOP ELEVATED STATION
200 NORTH STATE STREET, CHICAGO, IL 60601

BENT 450 PLATFORM SECTIONS & DETAILS

CDOT PROJECT D-1-209

DATE: 7/3/2023

SPEC. NO.

DRAWING NO. S-569

REVISION NO.

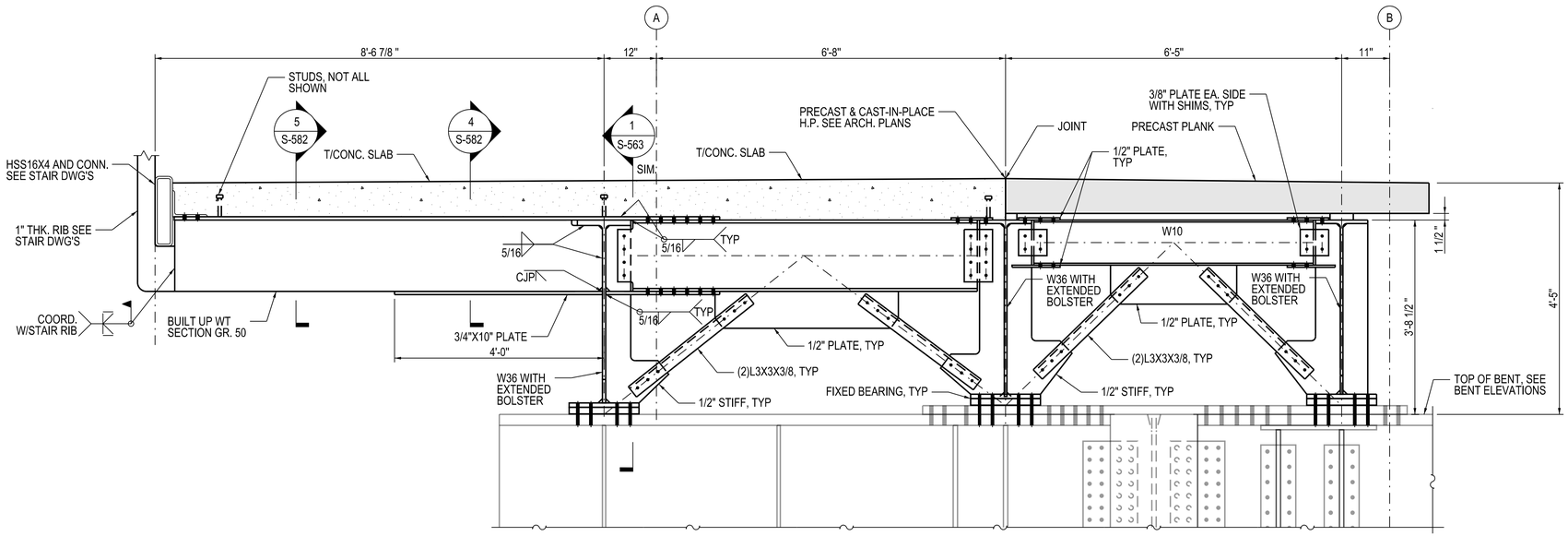

1 BENT 451 SECTION - NORTH PLATFORM

3/4" = 1'-0"

NOTES:
1. TYPICAL DIAPHGRAM BRACING SECTION FOR DETAILS NOT SHOWN HERE, SEE SHEET S-573

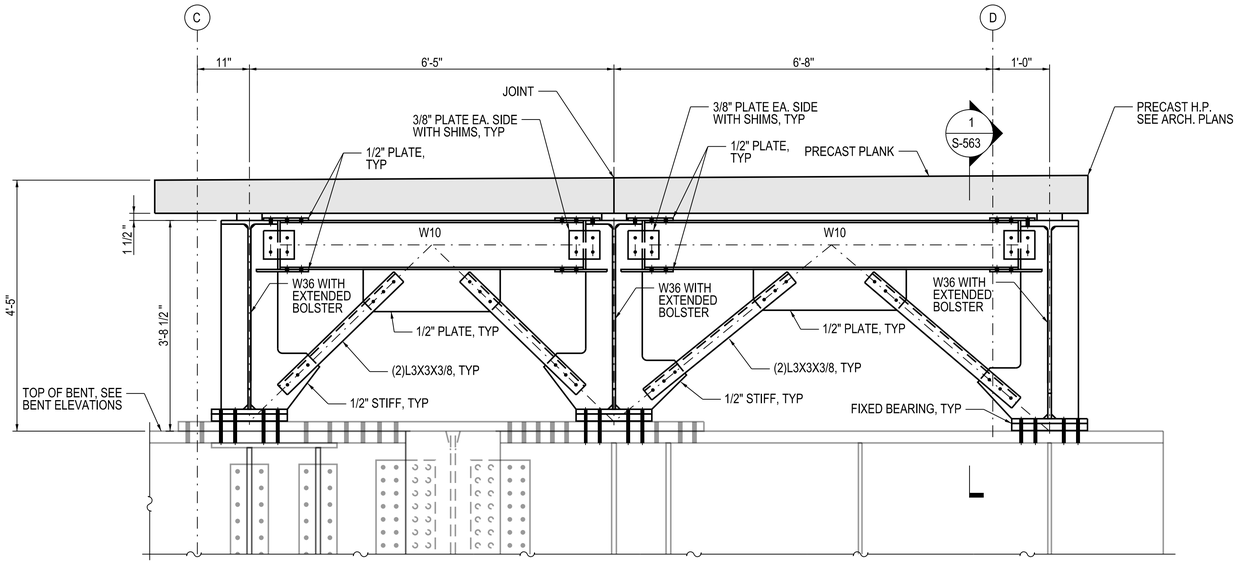

2 BENT 451 SECTION - SOUTH PLATFORM

3/4" = 1'-0"

NOTES:
1. TYPICAL DIAPHGRAM BRACING SECTION FOR DETAILS NOT SHOWN HERE, SEE SHEET S-573

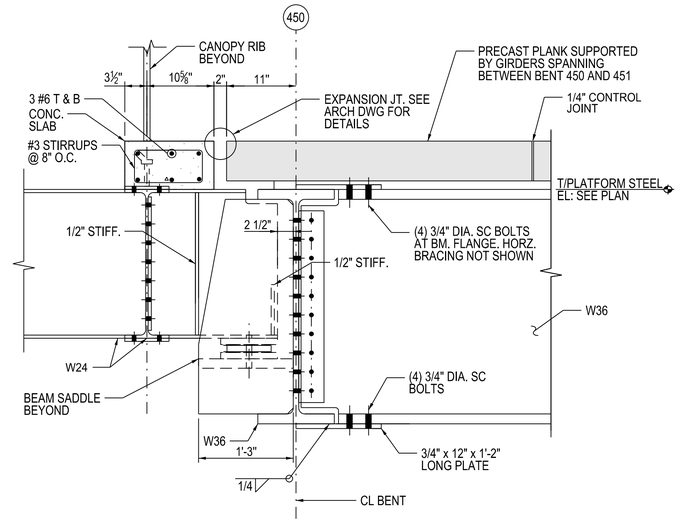

3 PLATFORM DETAIL

1" = 1'-0"

DESIGN BY:	EG								
DRAWN BY:	EG								
CHECKED BY:	JL								
APPROVED BY:	JL	4	7/3/2023	ISSUED FOR BID					
CDOT/APPROVED BY:		NO.	DATE	REVISIONS	DES.	DRW.	CHK.	DCCO	CDOT

TRANSYSTEMS
222 SOUTH RIVERSIDE PLAZA SUITE 610
CHICAGO, ILLINOIS 60606

SKIDMORE, OWINGS & MERRILL LLP
224 SOUTH MICHIGAN AVENUE, SUITE 1000
CHICAGO, ILLINOIS 60604

GARZA KARHOFF ENGINEERING, LLC
120 NORTH LASALLE STREET, SUITE 1400
CHICAGO, ILLINOIS 60602

CHICAGO DEPARTMENT OF TRANSPORTATION
DIVISION OF ENGINEERING

STATE / LAKE LOOP ELEVATED STATION
200 NORTH STATE STREET, CHICAGO, IL 60601

SPEC. NO.

BENT 451 PLATFORM SECTIONS & DETAILS

DRAWING NO.
S-570

CDOT PROJECT D-1-209

DATE: 7/3/2023

REVISION NO.

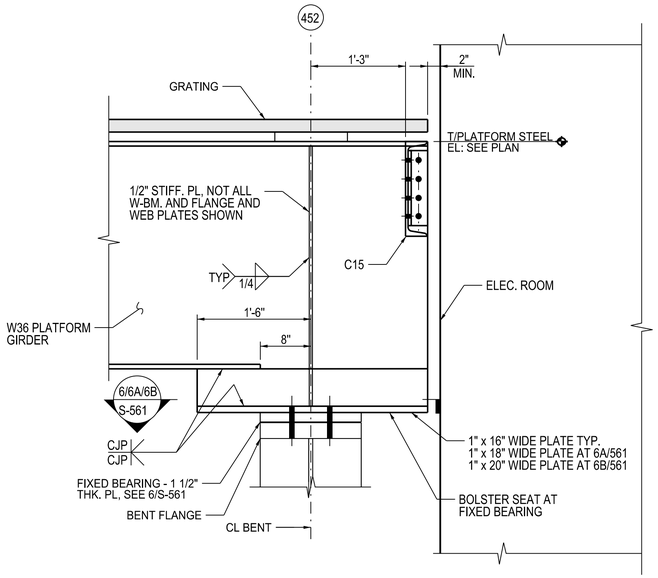

3 PLATFORM FIXED BEARING DETAIL

1" = 1'-0"

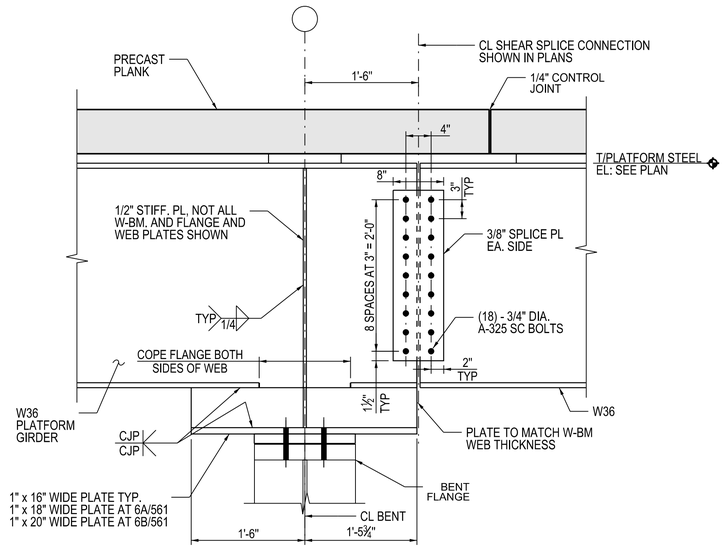

4 PLATFORM EXP. BEARING DETAIL

1" = 1'-0"

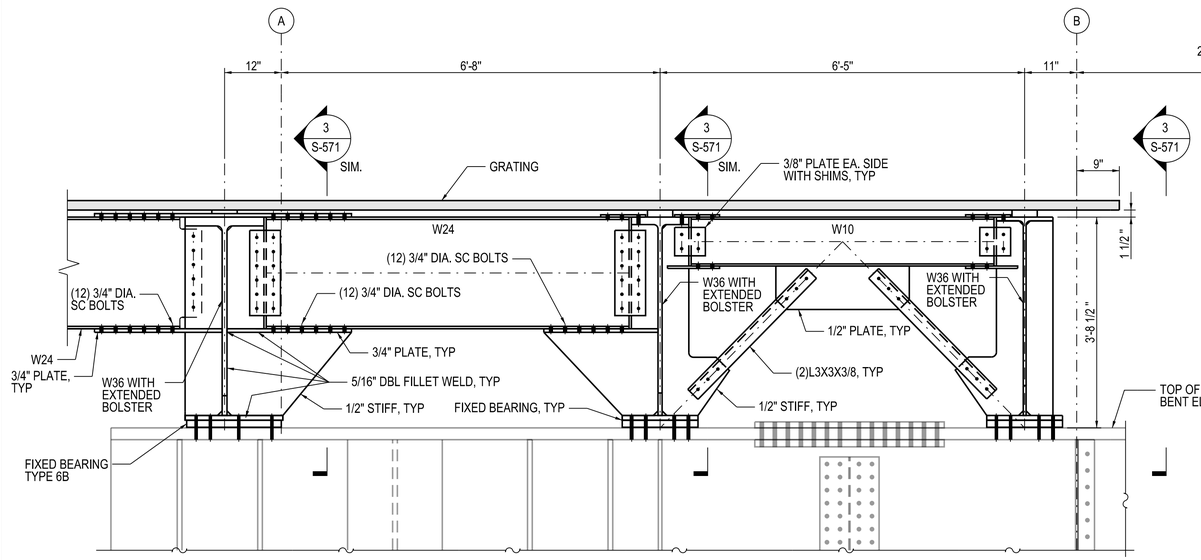

1 BENT 452 SECTION - NORTH PLATFORM

3/4" = 1'-0"

NOTES:
1. TYPICAL DIAPHGRAM BRACING SECTION FOR DETAILS NOT SHOWN HERE, SEE SHEET S-573

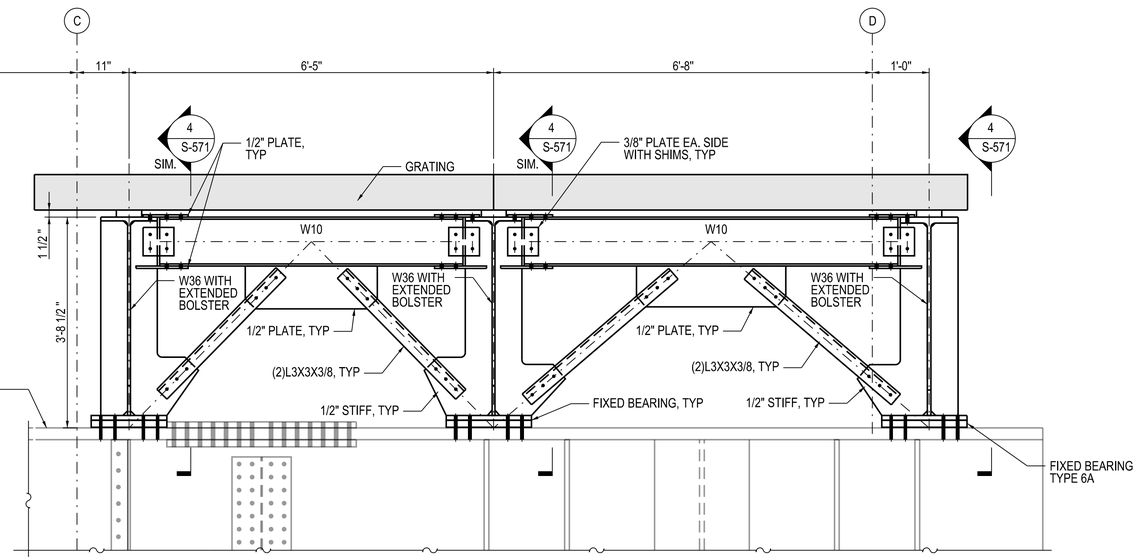

2 BENT 452 SECTION - SOUTH PLATFORM

3/4" = 1'-0"

NOTES:
1. TYPICAL DIAPHGRAM BRACING SECTION FOR DETAILS NOT SHOWN HERE, SEE SHEET S-573

DESIGN BY:	EG/UT								
DRAWN BY:	EG/UT								
CHECKED BY:	JL								
APPROVED BY:	JL	4	7/3/2023	ISSUED FOR BID					
CDOT/APPROVED BY:		NO.	DATE	REVISIONS	DES.	DRW.	CHK.	DCCO	CDOT

TRANSYSTEMS
222 SOUTH RIVERSIDE PLAZA SUITE 610
CHICAGO, ILLINOIS 60606

SKIDMORE, OWINGS & MERRILL LLP
224 SOUTH MICHIGAN AVENUE, SUITE 1000
CHICAGO, ILLINOIS 60604

GARZA KARHOFF ENGINEERING, LLC
120 NORTH LASALLE STREET, SUITE 1400
CHICAGO, ILLINOIS 60602

CHICAGO DEPARTMENT OF TRANSPORTATION
DIVISION OF ENGINEERING

STATE / LAKE LOOP ELEVATED STATION
200 NORTH STATE STREET, CHICAGO, IL 60601

BENT 452 PLATFORM SECTIONS & DETAILS

CDOT PROJECT D-1-209

DATE: 7/3/2023

SPEC. NO.

DRAWING NO. S-571

REVISION NO.

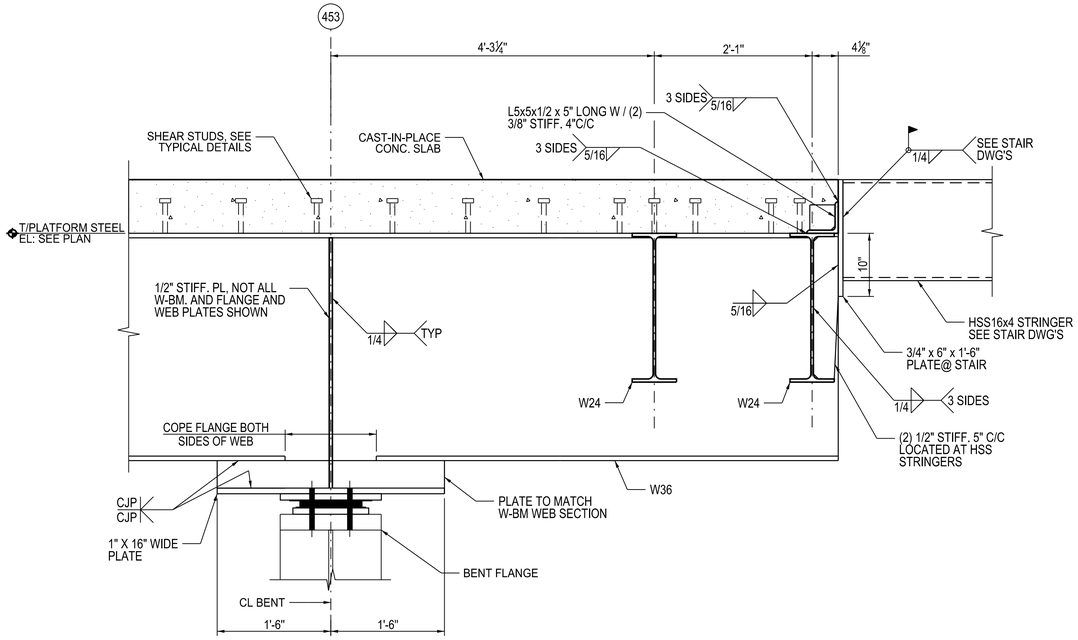

1 PLATFORM EXP. BEARING DETAIL 1

1" = 1'-0"

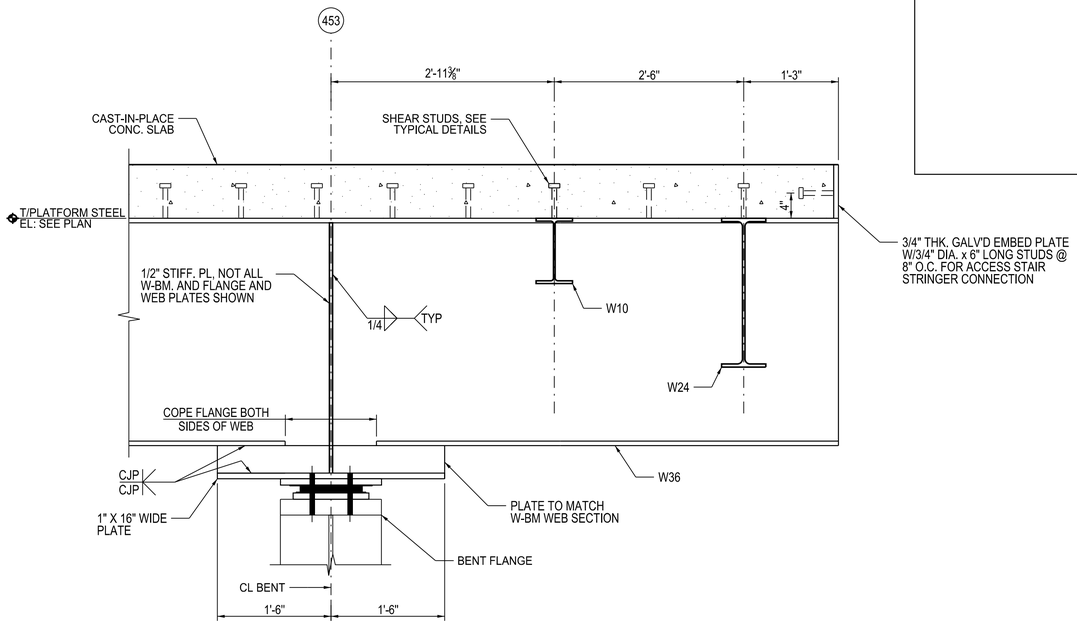

2 PLATFORM EXP. BEARING DETAIL 2

1" = 1'-0"

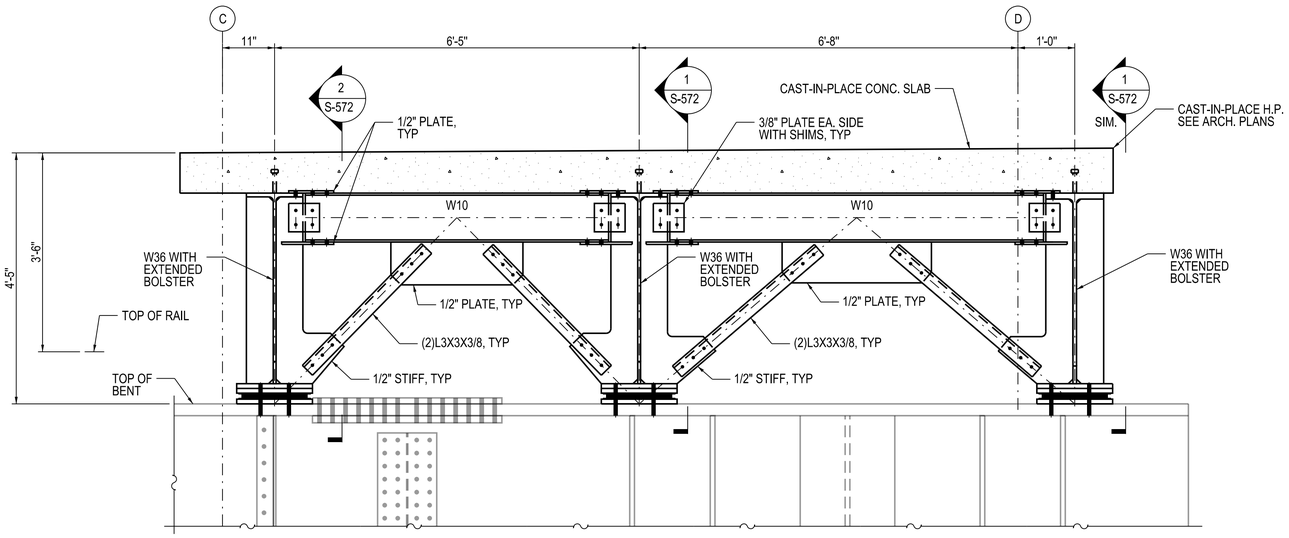

3 BENT 453 SECTION - SOUTH PLATFORM

3/4" = 1'-0"

NOTES:
1. TYPICAL DIAPHGRAM BRACING SECTION FOR DETAILS NOT SHOWN HERE, SEE SHEET S-573

DESIGN BY:	EG/UT								
DRAWN BY:	EG/UT								
CHECKED BY:	JL								
APPROVED BY:	JL	4	7/3/2023	ISSUED FOR BID					
CDOT/APPROVED BY:		NO.	DATE	REVISIONS	DES.	DRW.	CHK.	DCCO	CDOT

TRANSYSTEMS
222 SOUTH RIVERSIDE PLAZA SUITE 610
CHICAGO, ILLINOIS 60606

SKIDMORE, OWINGS & MERRILL LLP
224 SOUTH MICHIGAN AVENUE, SUITE 1000
CHICAGO, ILLINOIS 60604

GARZA KARHOFF ENGINEERING, LLC
120 NORTH LASALLE STREET, SUITE 1400
CHICAGO, ILLINOIS 60602

CHICAGO DEPARTMENT OF TRANSPORTATION
DIVISION OF ENGINEERING

STATE / LAKE LOOP ELEVATED STATION
200 NORTH STATE STREET, CHICAGO, IL 60601

BENT 453 PLATFORM SECTIONS & DETAILS

CDOT PROJECT D-1-209

DATE: 7/3/2023

SPEC. NO.

DRAWING NO. S-572

REVISION NO.

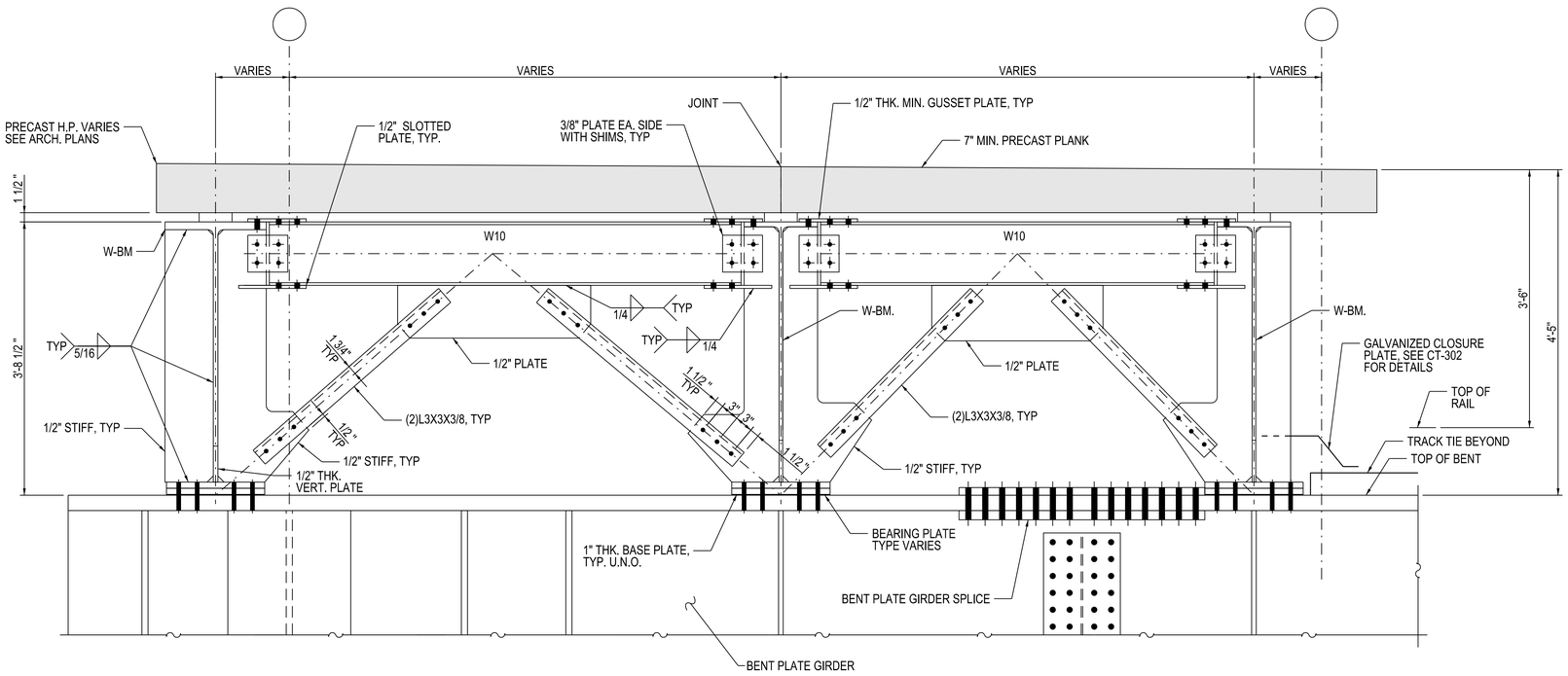

5 TYPICAL DIAPHRAGM BRACING SECTION

1" = 1'-0"

NOTES:
1. TYPICAL DETAILS FOR DIAPRGRAM BRACING TO BENT GIRDER. FOR SPECIFIC INFORMATION AT EACH BENT REFER TO BENT LOCATION SECTIONS S-561 TO S-572.
2. T/BENT ELEVATION VARIES. REFER TO S-300 TO S-310.
3. FOR PRECAST SLAB PLAN TYPICAL DETAILS SEE SHEET S-585, S-586.
4. FOR CAST-IN-PLACE CONCRETE SLAB TYPICAL DETAILS SEE SHEET S-587.

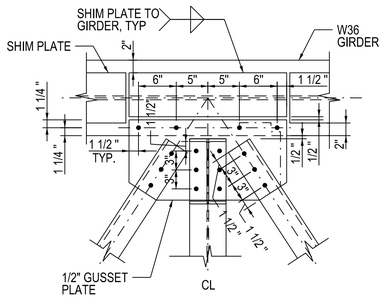

1 TYPICAL BRACING TO EDGE W36

1" = 1'-0"

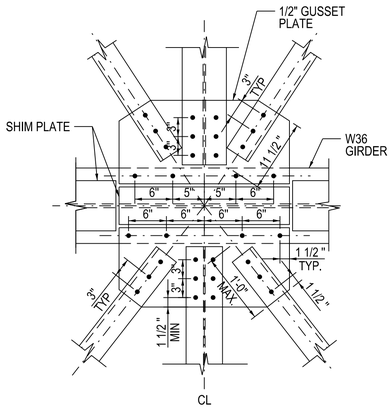

2 TYPICAL BRACING TO INTERIOR W36

1" = 1'-0"

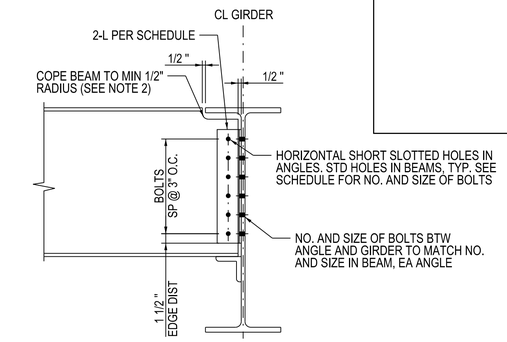

BEAM SHEAR CONNECTION SCHEDULE		
BEAM	ANGLES	A325 - SC
W10	2-L 3 1/2 X 3 1/2 X 3/8"	2-3/4" DIA.
W12	2-L 3 1/2 X 3 1/2 X 3/8"	3-3/4" DIA.
W16	2-L 3 1/2 X 3 1/2 X 3/8"	4-3/4" DIA.
W24	2-L 3 1/2 X 3 1/2 X 3/8"	6-3/4" DIA.
W30	2-L 3 1/2 X 3 1/2 X 3/8"	8-3/4" DIA.
W36	2-L 3 1/2 X 3 1/2 X 3/8"	9-3/4" DIA.

NOTES:
1. DEPTH OF COPE SHALL NOT BE GREATER THAN THE DISTANCE FROM THE TOP OF THE GIRDER TO THE TOE OF THE K REGION OF THE GIRDER.
2. SLAB, SHIM PLATES, AND BRACING NOT SHOWN FOR CLARITY.
3. WHEN A SECOND BEAM FRAMES IN TO A GIRDER ON OPPOSIDE SIDE, SHARED BOLTS CONNECTING THE CONNECTION ANGLES TO THE GIRDER WEB MUST CORRESPOND TO THE LARGER BOLT REQUIRED BY THE RESPECTIVE BEAMS.

3 TYPICAL BEAM TO BEAM SHEAR CONNECTION

1" = 1'-0"

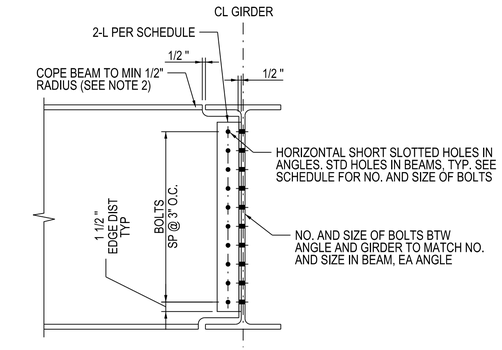

BEAM SHEAR CONNECTION SCHEDULE		
BEAM	ANGLES	A325 - SC
W24	2-L 3 1/2 X 3 1/2 X 3/8"	6-3/4" DIA.
W36	2-L 3 1/2 X 3 1/2 X 3/8"	9-3/4" DIA.

NOTES:
1. DEPTH OF COPE SHALL NOT BE GREATER THAN THE DISTANCE FROM THE TOP OF THE GIRDER TO THE TOE OF THE K REGION OF THE GIRDER.
2. SLAB, SHIM PLATES, AND BRACING NOT SHOWN FOR CLARITY.
3. WHEN A SECOND BEAM FRAMES IN TO A GIRDER ON OPPOSIDE SIDE, SHARED BOLTS CONNECTING THE CONNECTION ANGLES TO THE GIRDER WEB MUST CORRESPOND TO THE LARGER BOLT REQUIRED BY THE RESPECTIVE BEAMS.

4 TYPICAL BEAM TO BEAM SHEAR CONNECTION - GIRDER DEPTH EQUAL TO BEAM

1" = 1'-0"

DESIGN BY:	EG									
DRAWN BY:	EG									
CHECKED BY:	JL									
APPROVED BY:		4	7/3/2023	ISSUED FOR BID						
CDOT/APPROVED BY:		NO.	DATE	REVISIONS	DES.	DRW.	CHK.	DCCO	CDOT	

TRANSYSTEMS
222 SOUTH RIVERSIDE PLAZA SUITE 610
CHICAGO, ILLINOIS 60606

SKIDMORE, OWINGS & MERRILL LLP
224 SOUTH MICHIGAN AVENUE, SUITE 1000
CHICAGO, ILLINOIS 60604

GARZA KARHOFF ENGINEERING, LLC
120 NORTH LASALLE STREET, SUITE 1400
CHICAGO, ILLINOIS 60602

CHICAGO DEPARTMENT OF TRANSPORTATION
DIVISION OF ENGINEERING

STATE / LAKE LOOP ELEVATED STATION
200 NORTH STATE STREET, CHICAGO, IL 60601

SPEC. NO.

STRUCTURAL STEEL DETAILS 1

DRAWING NO. S-573

CDOT PROJECT D-1-209

DATE: 7/3/2023

REVISION NO.

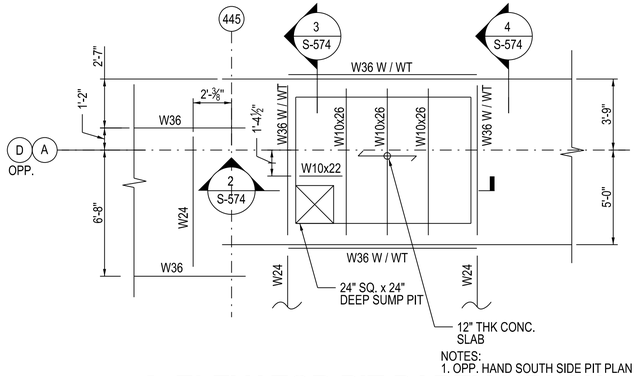

NOTES:
1. OPP. HAND SOUTH SIDE PIT PLAN

1 ELEVATOR PIT PARTIAL PLAN
1/4" = 1'-0"

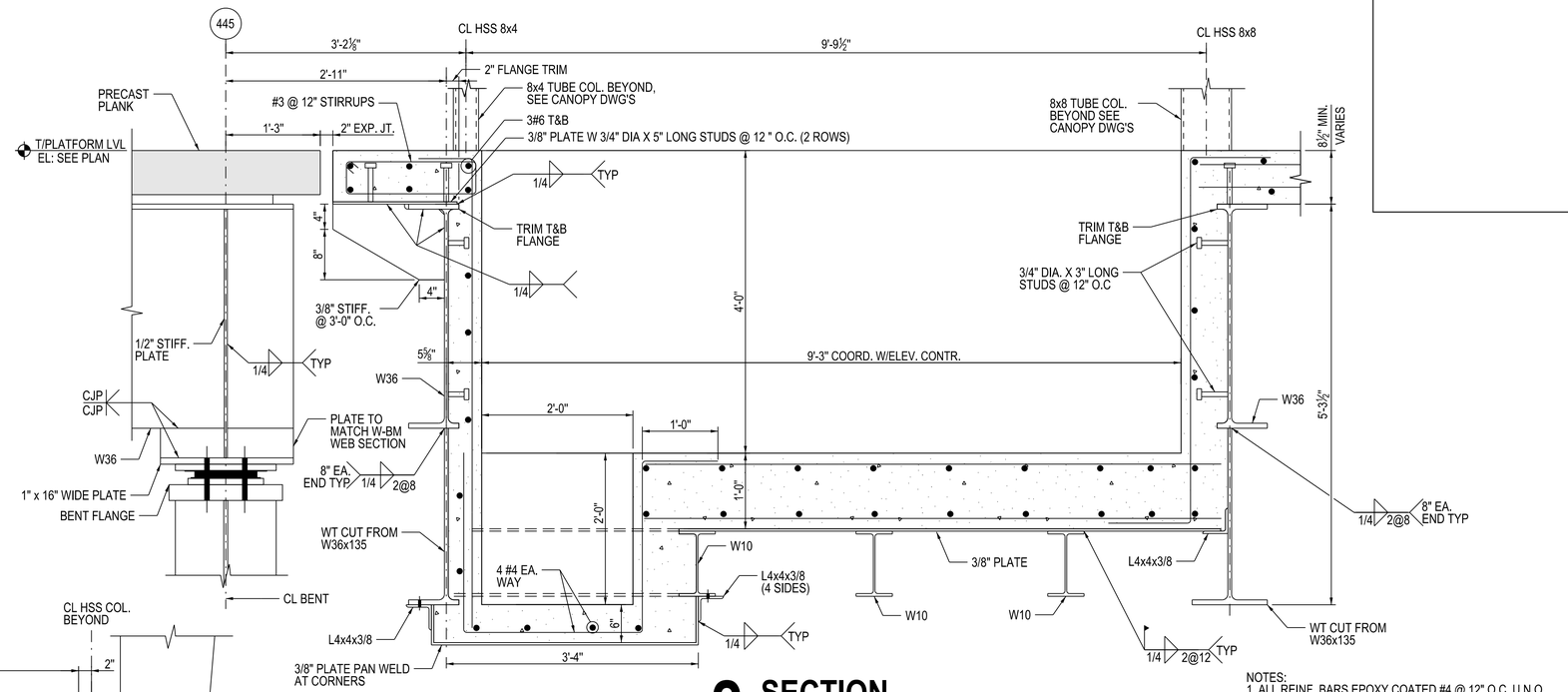

NOTES:
1. ALL REINF. BARS EPOXY COATED #4 @ 12" O.C. U.N.O.

2 SECTION
1" = 1'-0"

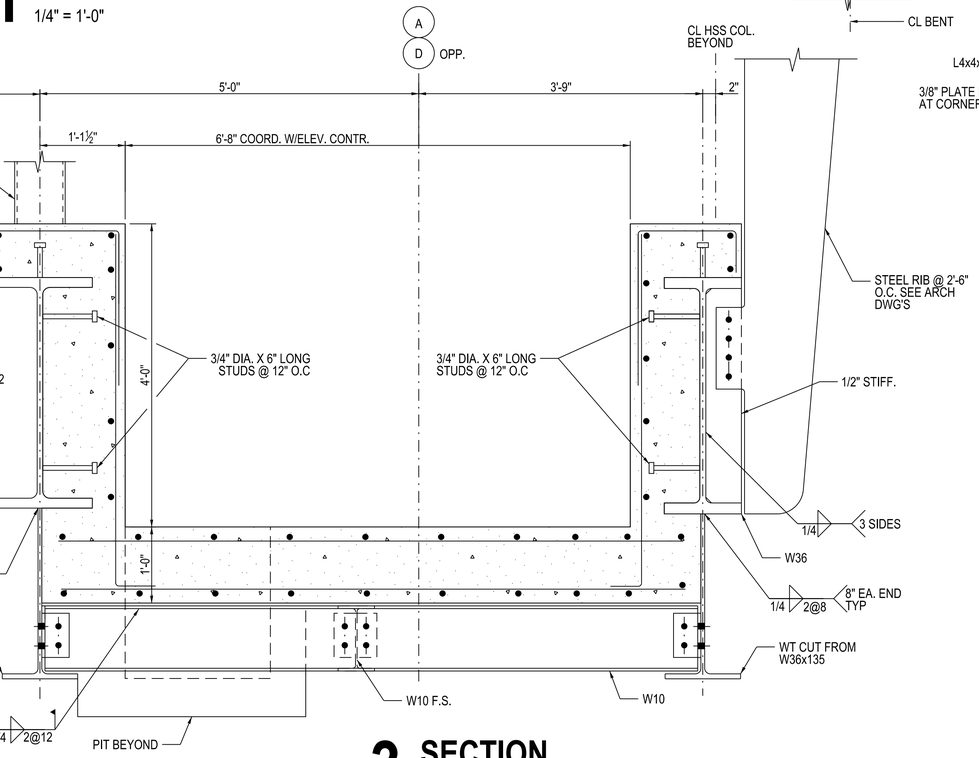

NOTES:
1. ALL REINF. BARS EPOXY COATED #4 @ 12" O.C. U.N.O.

3 SECTION
1" = 1'-0"

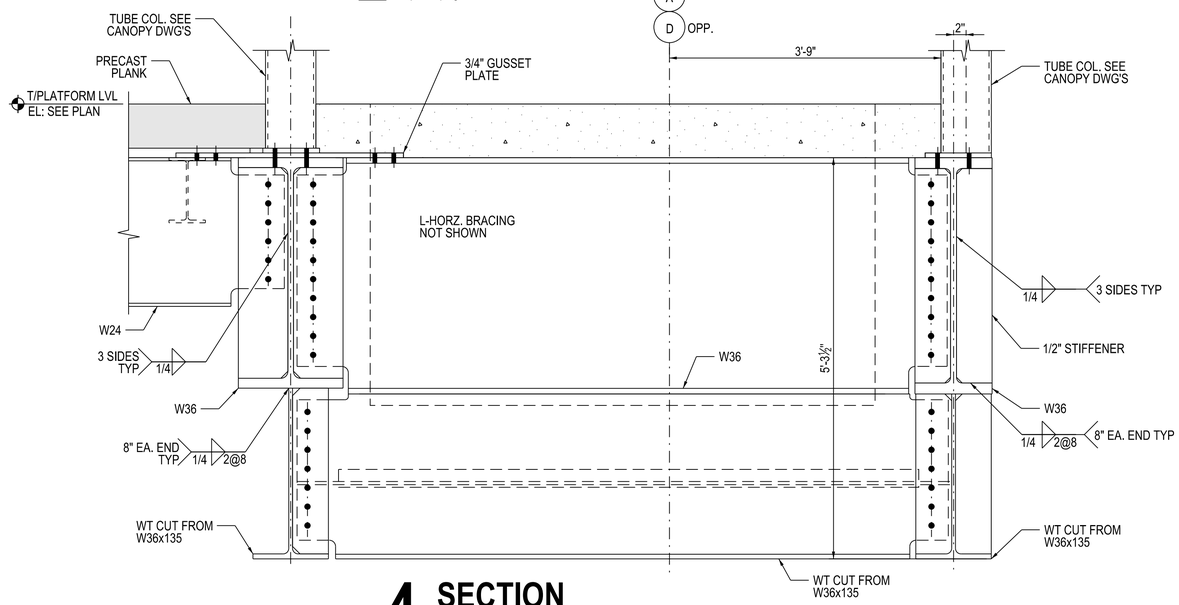

NOTES:
1. ALL REINF. BARS EPOXY COATED #4 @ 12" O.C. U.N.O.

4 SECTION
1" = 1'-0"

DESIGN BY:	UT								
DRAWN BY:	UT								
CHECKED BY:	JL								
APPROVED BY:	JL	4	7/3/2023	ISSUED FOR BID					
CDOT/APPROVED BY:		NO.	DATE	REVISIONS	DES.	DRW.	CHK.	DCCO	CDOT

TRANSYSTEMS
222 SOUTH RIVERSIDE PLAZA SUITE 610
CHICAGO, ILLINOIS 60606

SKIDMORE, OWINGS & MERRILL LLP
224 SOUTH MICHIGAN AVENUE, SUITE 1000
CHICAGO, ILLINOIS 60604

GARZA KARHOFF ENGINEERING, LLC
120 NORTH LASALLE STREET, SUITE 1400
CHICAGO, ILLINOIS 60602

CHICAGO DEPARTMENT
OF TRANSPORTATION
DIVISION OF ENGINEERING

STATE / LAKE LOOP ELEVATED STATION
200 NORTH STATE STREET, CHICAGO, IL 60601

SPEC. NO.

STRUCTURAL STEEL DETAILS 2

DRAWING NO.
S-574

CDOT PROJECT D-1-209

DATE: 7/3/2023

REVISION NO.

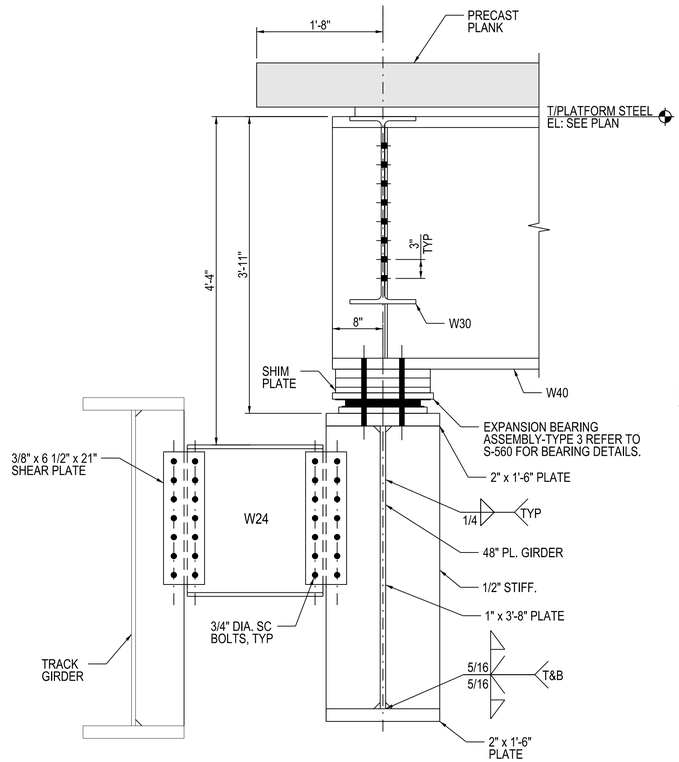

1 SECTION
1" = 1'-0"

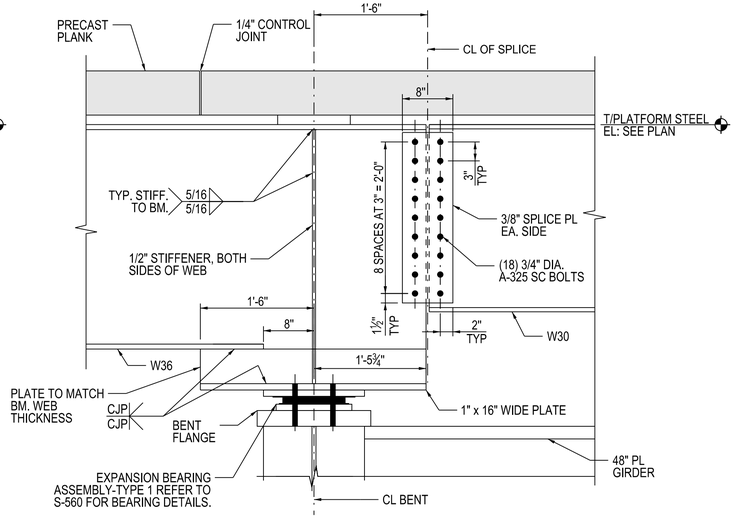

2 SECTION
1" = 1'-0"

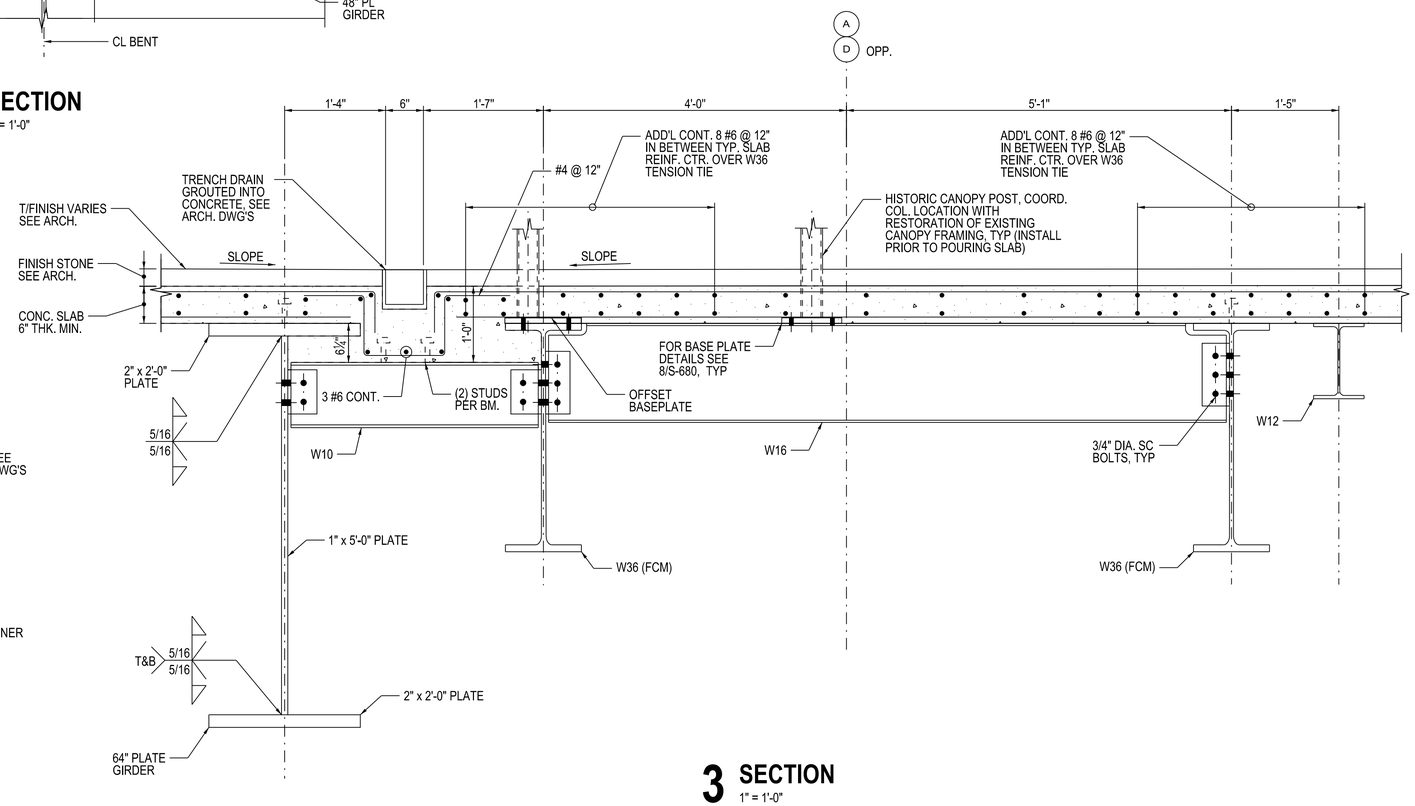

3 SECTION
1" = 1'-0"

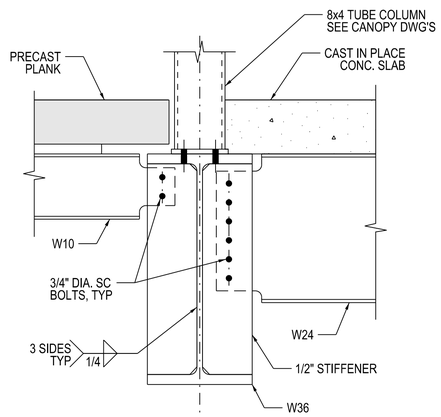

4 SECTION
1" = 1'-0"

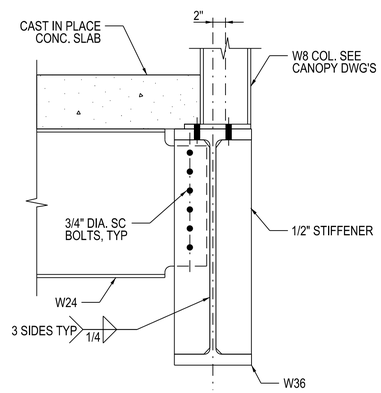

5 SECTION
1" = 1'-0"

DESIGN BY:	UT								
DRAWN BY:	UT								
CHECKED BY:	JL								
APPROVED BY:	JL	4	7/3/2023	ISSUED FOR BID					
CDOT/APPROVED BY:		NO.	DATE	REVISIONS	DES.	DRW.	CHK.	DCCO	CDOT

TRANSYSTEMS
222 SOUTH RIVERSIDE PLAZA SUITE 610
CHICAGO, ILLINOIS 60606

SKIDMORE, OWINGS & MERRILL LLP
224 SOUTH MICHIGAN AVENUE, SUITE 1000
CHICAGO, ILLINOIS 60604

GARZA KARHOFF ENGINEERING, LLC
120 NORTH LASALLE STREET, SUITE 1400
CHICAGO, ILLINOIS 60602

CHICAGO DEPARTMENT OF TRANSPORTATION
DIVISION OF ENGINEERING

STATE / LAKE LOOP ELEVATED STATION
200 NORTH STATE STREET, CHICAGO, IL 60601

STRUCTURAL STEEL DETAILS 3

CDOT PROJECT D-1-209 | DATE: 7/3/2023

SPEC. NO.

DRAWING NO. S-575

REVISION NO.

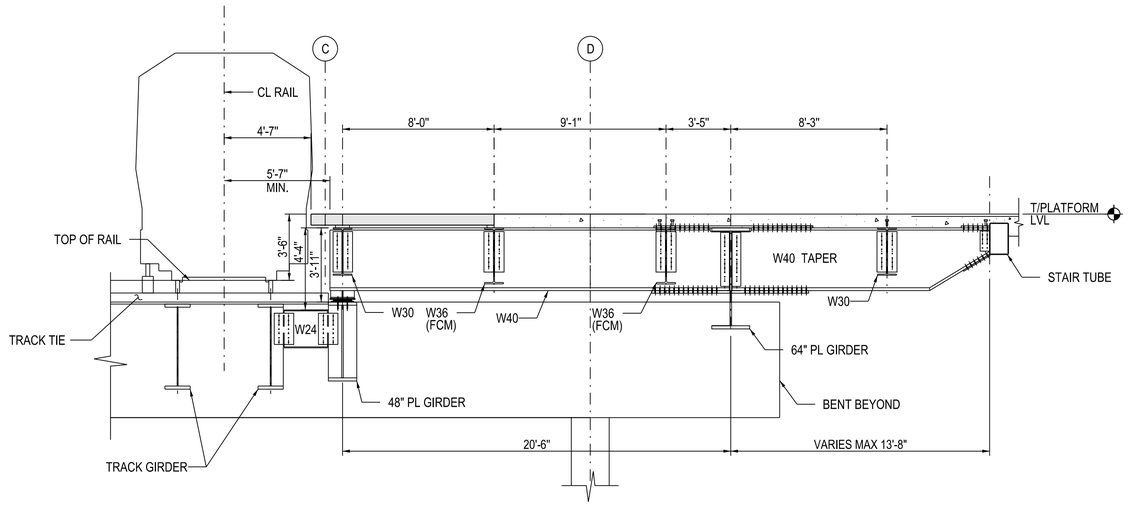

1 TYPICAL PLATFORM AT MOMENT CONNECTION

1/4" = 1'-0"

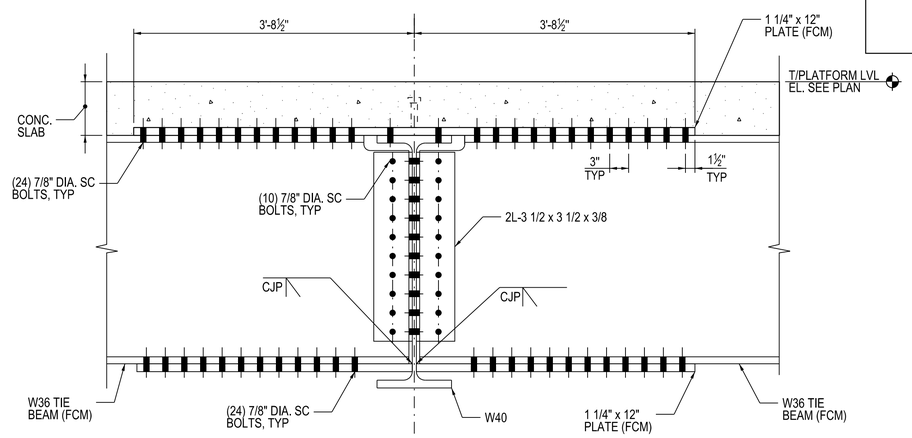

2 SECTION

1" = 1'-0"

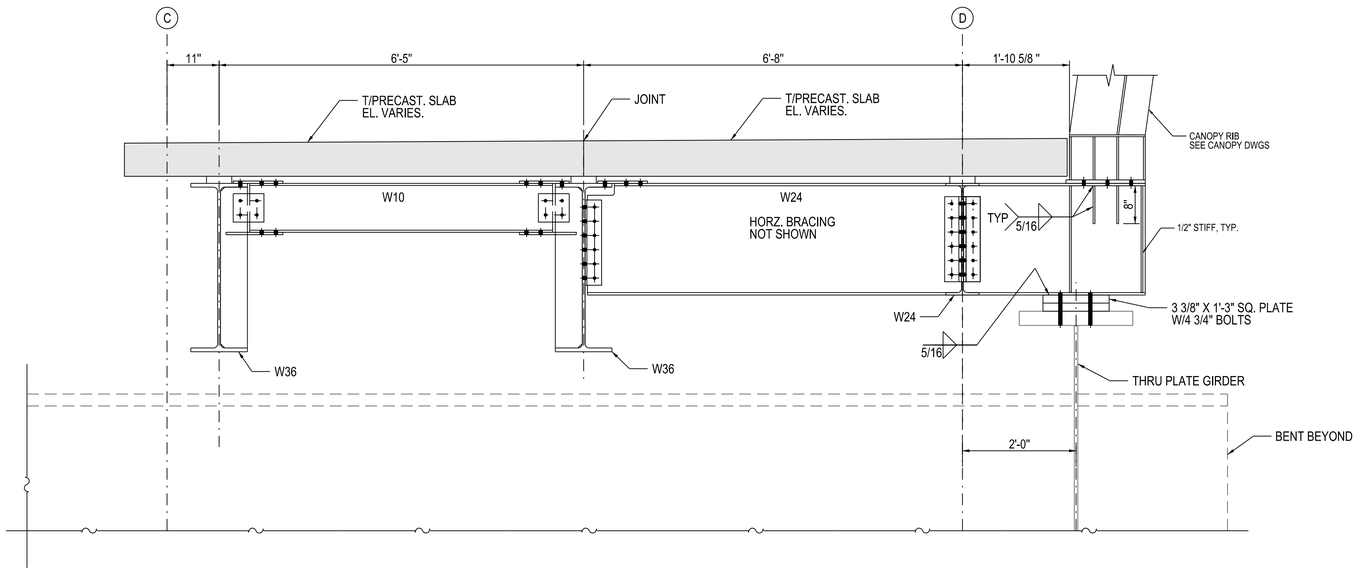

3 SECTION AT TYPICAL PLATFORM AT THRU PLATE GIRDER

3/4" = 1'-0"

DESIGN BY:	EG/UT								
DRAWN BY:	EG/UT								
CHECKED BY:	JL								
APPROVED BY:	JL	4	7/3/2023	ISSUED FOR BID					
CDOT/APPROVED BY:		NO.	DATE	REVISIONS	DES.	DRW.	CHK.	DCCO	CDOT

TRANSYSTEMS
222 SOUTH RIVERSIDE PLAZA SUITE 610
CHICAGO, ILLINOIS 60606

SKIDMORE, OWINGS & MERRILL LLP
224 SOUTH MICHIGAN AVENUE, SUITE 1000
CHICAGO, ILLINOIS 60604

GARZA KARHOFF ENGINEERING, LLC
120 NORTH LASALLE STREET, SUITE 1400
CHICAGO, ILLINOIS 60602

CHICAGO DEPARTMENT
OF TRANSPORTATION
DIVISION OF ENGINEERING

STATE / LAKE LOOP ELEVATED STATION
200 NORTH STATE STREET, CHICAGO, IL 60601

SPEC. NO.

STRUCTURAL STEEL DETAILS 4

DRAWING NO.
S-576

CDOT PROJECT D-1-209

DATE: 7/3/2023

REVISION NO.

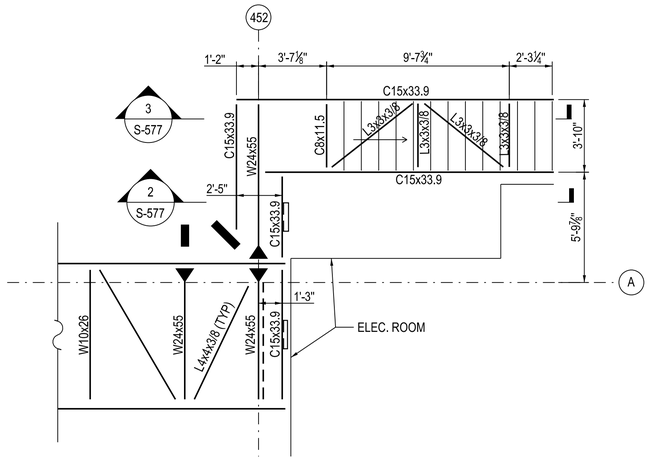

1 STAIR LANDING PARTIAL PLAN

1/4" = 1'-0"

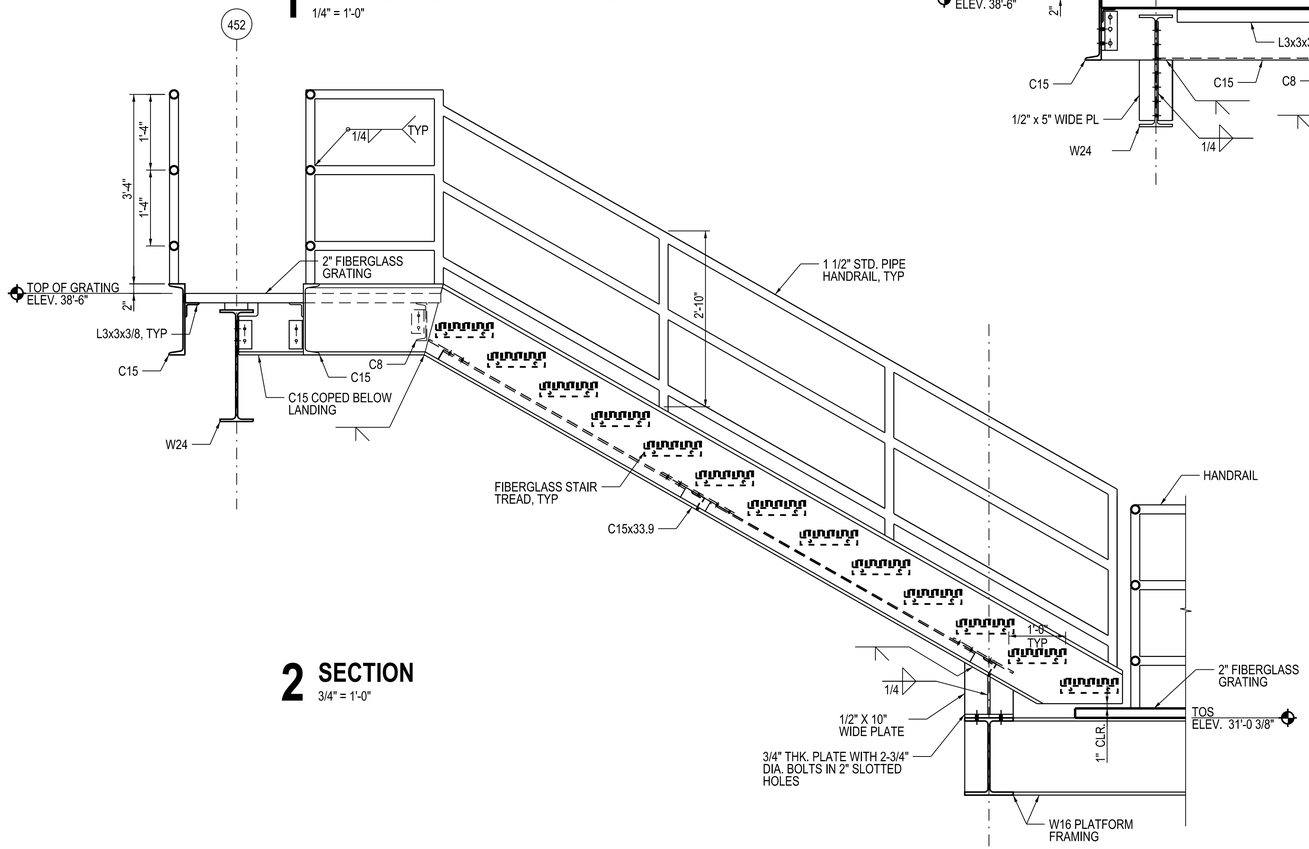

2 SECTION

3/4" = 1'-0"

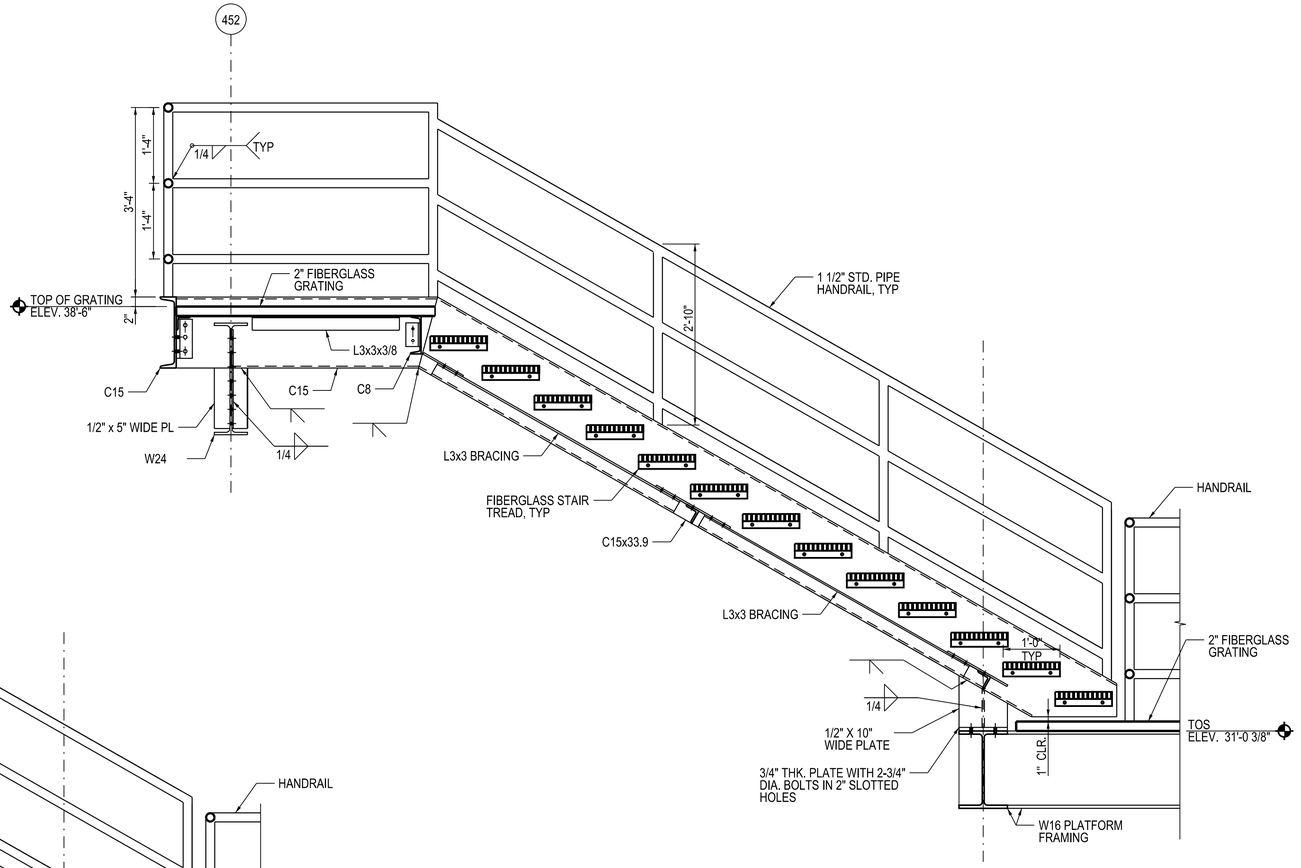

3 SECTION

3/4" = 1'-0"

DESIGN BY:	UT								
DRAWN BY:	UT								
CHECKED BY:	JL								
APPROVED BY:	JL	4	7/3/2023	ISSUED FOR BID					
CDOT/APPROVED BY:		NO.	DATE	REVISIONS	DES.	DRW.	CHK.	DCCO	CDOT

TRANSYSTEMS
222 SOUTH RIVERSIDE PLAZA SUITE 610
CHICAGO, ILLINOIS 60606

SKIDMORE, OWINGS & MERRILL LLP
224 SOUTH MICHIGAN AVENUE, SUITE 1000
CHICAGO, ILLINOIS 60604

GARZA KARHOFF ENGINEERING, LLC
120 NORTH LASALLE STREET, SUITE 1400
CHICAGO, ILLINOIS 60602

CHICAGO DEPARTMENT
OF TRANSPORTATION
DIVISION OF ENGINEERING

STATE / LAKE LOOP ELEVATED STATION
200 NORTH STATE STREET, CHICAGO, IL 60601

SPEC. NO.

STRUCTURAL STEEL DETAILS 5

DRAWING NO.
S-577

CDOT PROJECT D-1-209

DATE: 7/3/2023

REVISION NO.

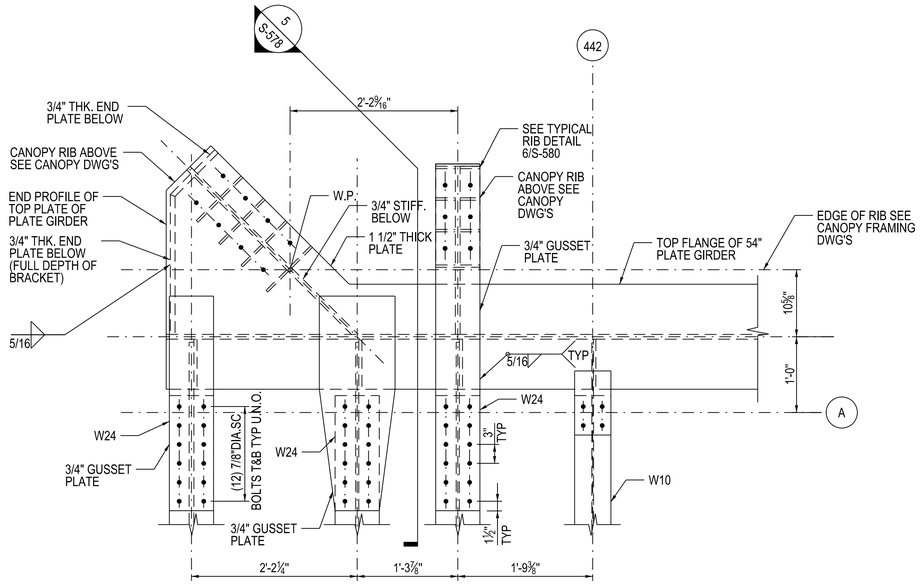

1 RIB CONNECTION NW CORNER TOP PLATE

1" = 1'-0"

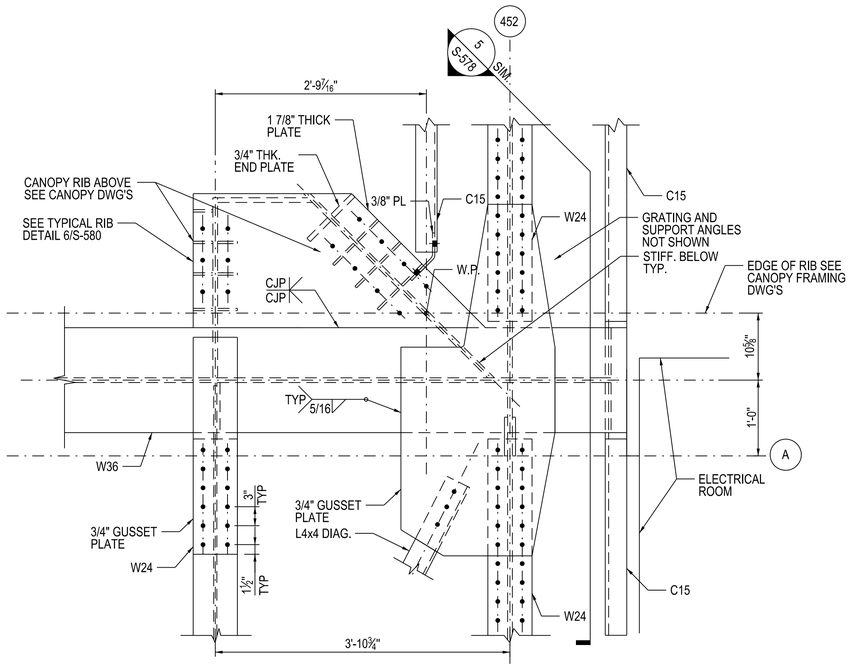

2 RIB CONNECTION NE CORNER TOP PLATE

1" = 1'-0"

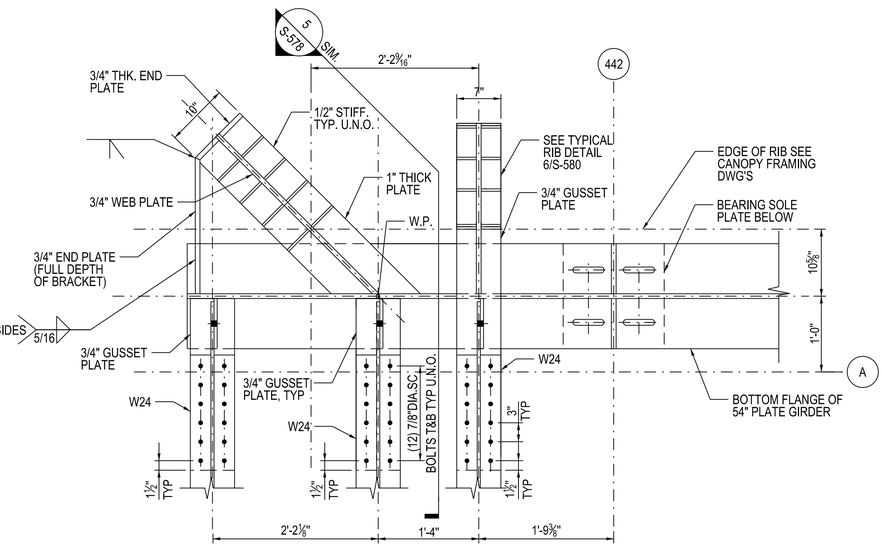

3 RIB CONNECTION NW CORNER BOTT. PLATE

1" = 1'-0"

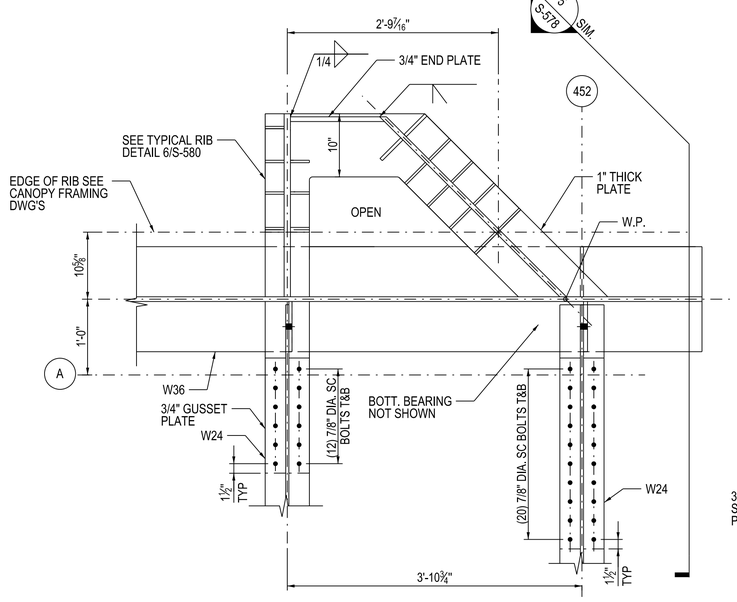

4 RIB CONNECTION NE CORNER BOTT. PLATE

1" = 1'-0"

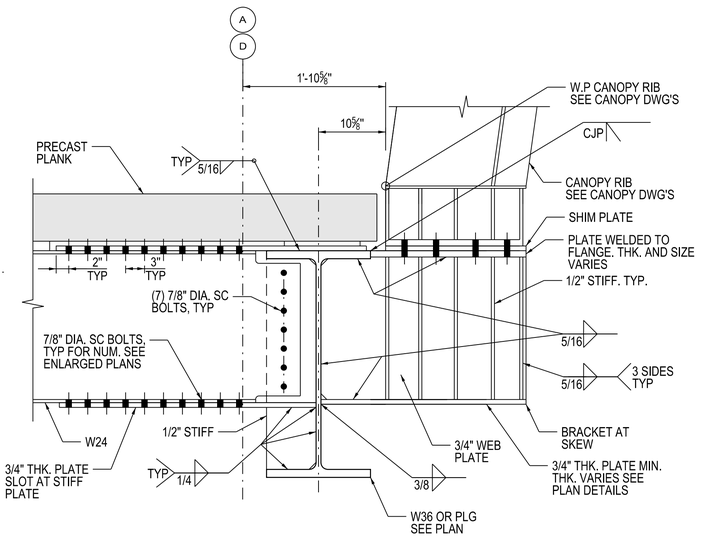

5 END RIB CONNECTION SECTION

1" = 1'-0"

DESIGN BY:	UT								
DRAWN BY:	UT								
CHECKED BY:	JL								
APPROVED BY:	JL	4	7/3/2023	ISSUED FOR BID					
CDOT/APPROVED BY:		NO.	DATE	REVISIONS	DES.	DRW.	CHK.	DCCO	CDOT

TRANSYSTEMS
222 SOUTH RIVERSIDE PLAZA SUITE 610
CHICAGO, ILLINOIS 60606

SKIDMORE, OWINGS & MERRILL LLP
224 SOUTH MICHIGAN AVENUE, SUITE 1000
CHICAGO, ILLINOIS 60604

GARZA KARHOFF ENGINEERING, LLC
120 NORTH LASALLE STREET, SUITE 1400
CHICAGO, ILLINOIS 60602

CHICAGO DEPARTMENT OF TRANSPORTATION
DIVISION OF ENGINEERING

STATE / LAKE LOOP ELEVATED STATION
200 NORTH STATE STREET, CHICAGO, IL 60601

SPEC. NO.

STRUCTURAL STEEL DETAILS 6

DRAWING NO.
S-578

CDOT PROJECT D-1-209

DATE: 7/3/2023

REVISION NO.

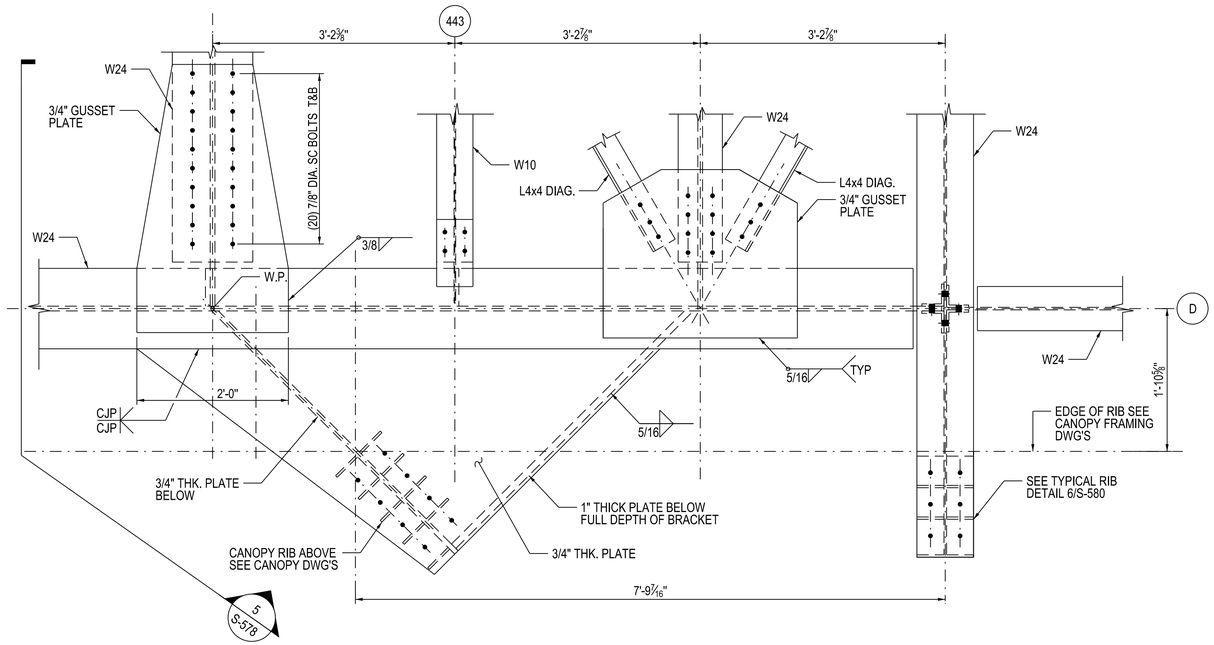

1 RIB CONNECTION SW CORNER TOP PLATE

1" = 1'-0"

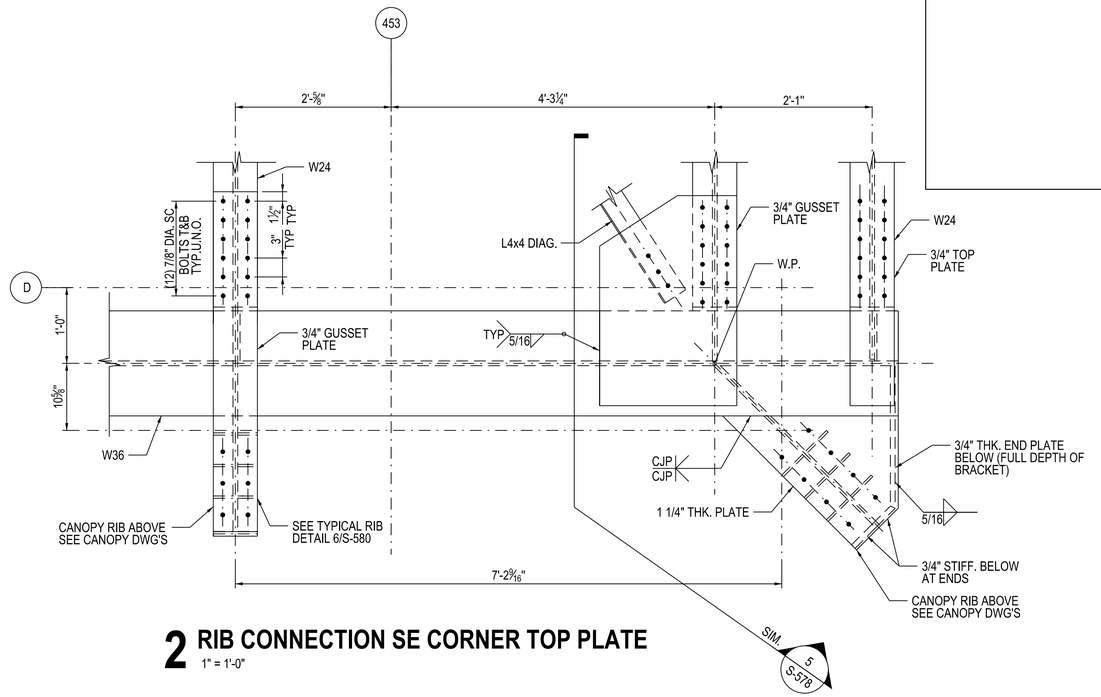

2 RIB CONNECTION SE CORNER TOP PLATE

1" = 1'-0"

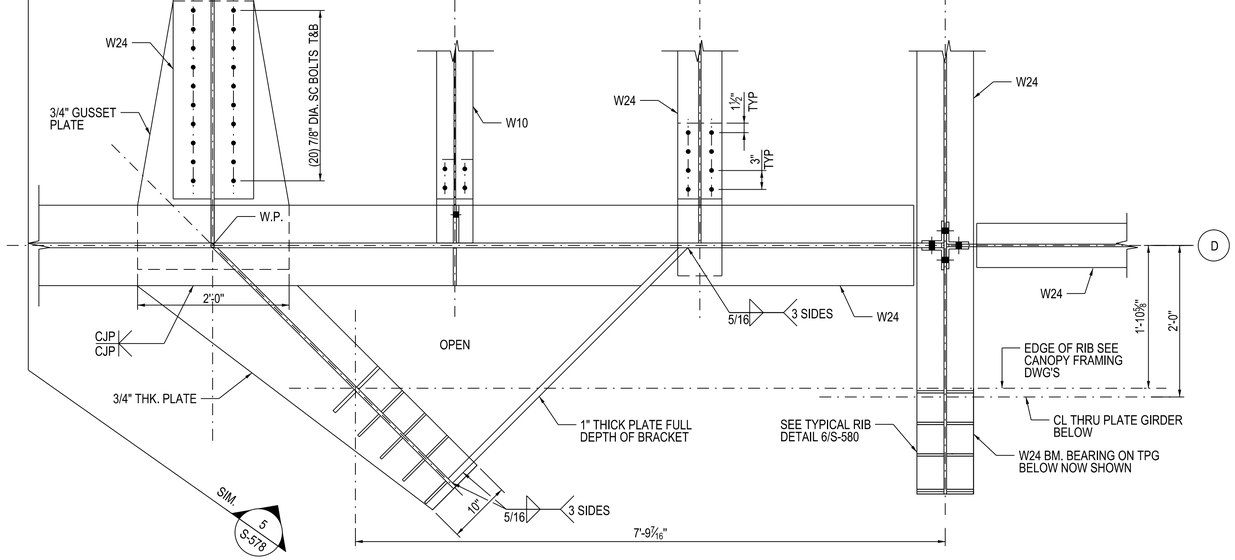

3 RIB CONNECTION SW CORNER BOTT. PLATE

1" = 1'-0"

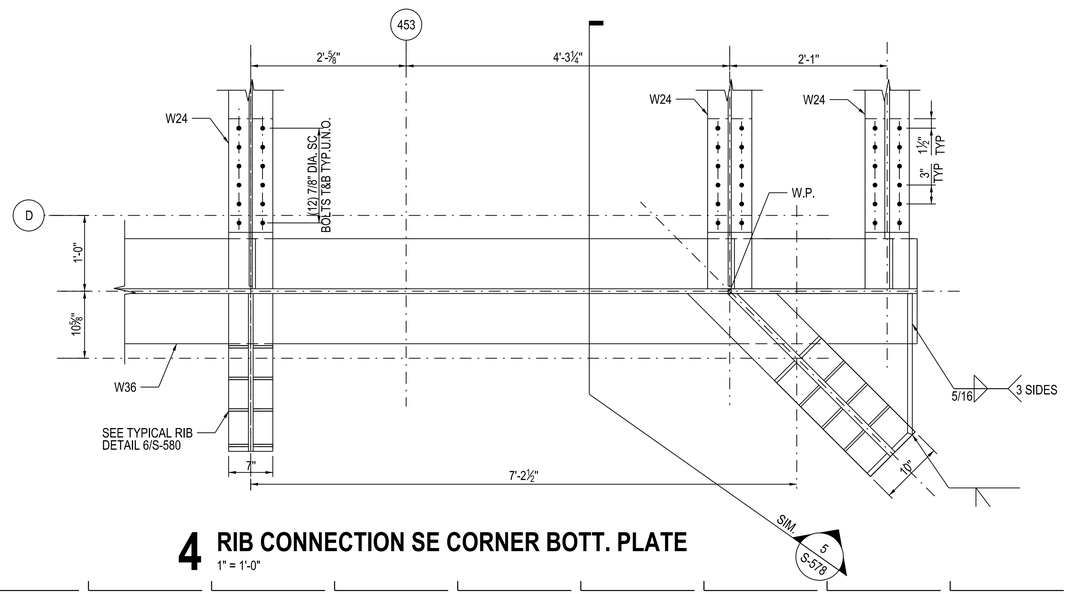

4 RIB CONNECTION SE CORNER BOTT. PLATE

1" = 1'-0"

DESIGN BY:	UT								
DRAWN BY:	UT								
CHECKED BY:	JL								
APPROVED BY:	JL	4	7/3/2023	ISSUED FOR BID					
CDOT/APPROVED BY:		NO.	DATE	REVISIONS	DES.	DRW.	CHK.	DCCO	CDOT

TRANSYSTEMS
222 SOUTH RIVERSIDE PLAZA SUITE 610
CHICAGO, ILLINOIS 60606

SKIDMORE, OWINGS & MERRILL LLP
224 SOUTH MICHIGAN AVENUE, SUITE 1000
CHICAGO, ILLINOIS 60604

GARZA KARHOFF ENGINEERING, LLC
120 NORTH LASALLE STREET, SUITE 1400
CHICAGO, ILLINOIS 60602

CHICAGO DEPARTMENT OF TRANSPORTATION
DIVISION OF ENGINEERING

STATE / LAKE LOOP ELEVATED STATION
200 NORTH STATE STREET, CHICAGO, IL 60601

SPEC. NO.

STRUCTURAL STEEL DETAILS 7

DRAWING NO.
S-579

CDOT PROJECT D-1-209

DATE: 7/3/2023

REVISION NO.

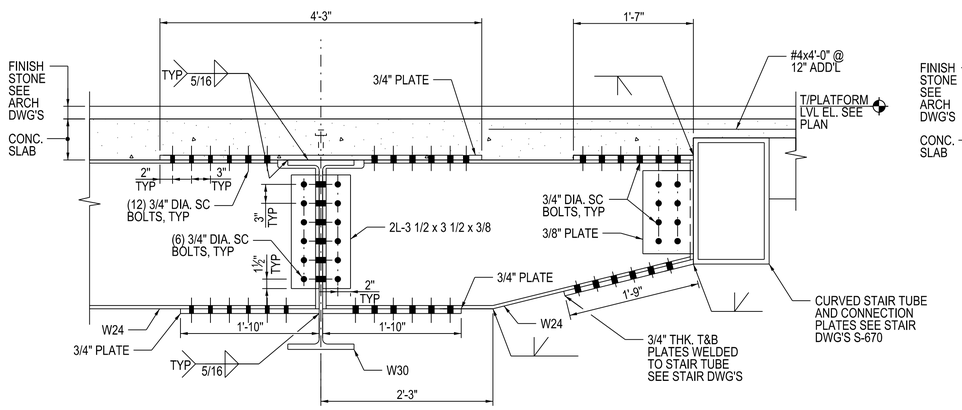

1 SECTION
1" = 1'-0"

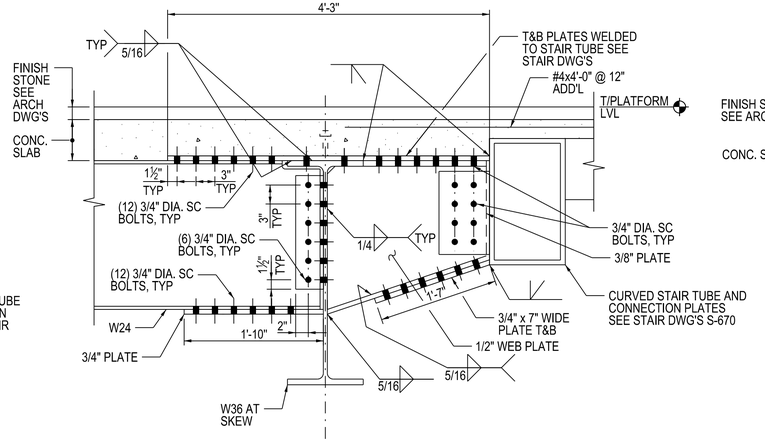

2 SECTION
1" = 1'-0"

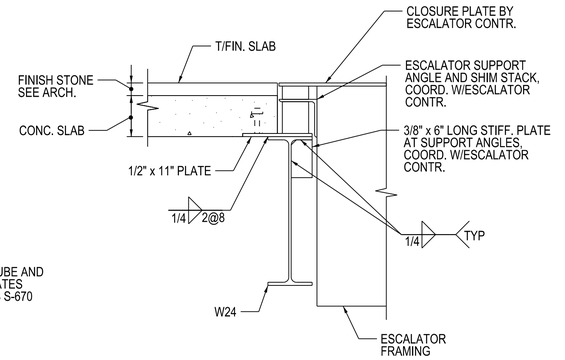

3 SECTION
1" = 1'-0"

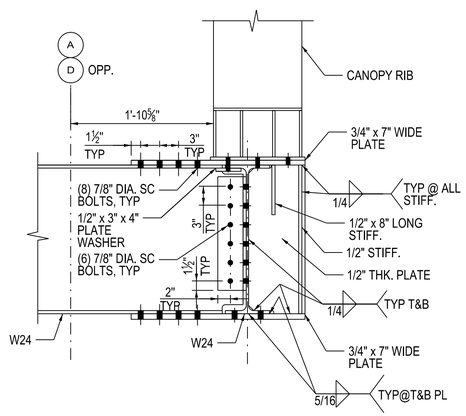

4 SECTION
1" = 1'-0"

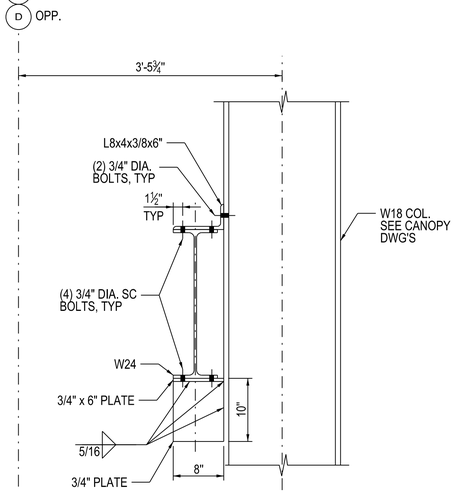

5 SECTION
1" = 1'-0"

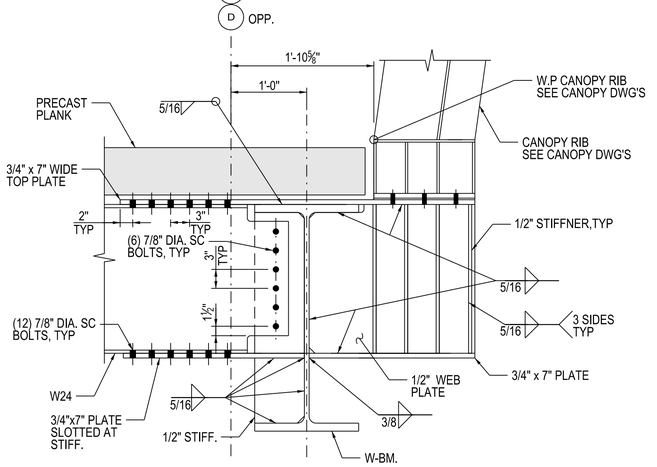

6 TYPICAL RIB CONNECTION
1" = 1'-0"

NOTES:
1. SEE SHEET S-587 FOR CONCRETE DETAILS, STUD SIZE AND SPACING.

DESIGN BY:	UT								
DRAWN BY:	UT								
CHECKED BY:	JL								
APPROVED BY:	JL	4	7/3/2023	ISSUED FOR BID					
CDOT/APPROVED BY:		NO.	DATE	REVISIONS	DES.	DRW.	CHK.	DCCO	CDOT

TRANSYSTEMS
222 SOUTH RIVERSIDE PLAZA SUITE 610
CHICAGO, ILLINOIS 60606

SKIDMORE, OWINGS & MERRILL LLP
224 SOUTH MICHIGAN AVENUE, SUITE 1000
CHICAGO, ILLINOIS 60604

GARZA KARHOFF ENGINEERING, LLC
120 NORTH LASALLE STREET, SUITE 1400
CHICAGO, ILLINOIS 60602

CHICAGO DEPARTMENT OF TRANSPORTATION
DIVISION OF ENGINEERING

STATE / LAKE LOOP ELEVATED STATION
200 NORTH STATE STREET, CHICAGO, IL 60601

STRUCTURAL STEEL DETAILS 8

CDOT PROJECT D-1-209 | DATE: 7/3/2023

SPEC. NO.

DRAWING NO. S-580

REVISION NO.

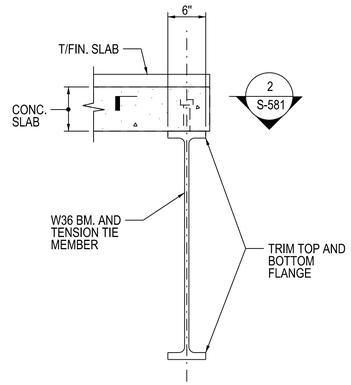

1 SECTION
1" = 1'-0"

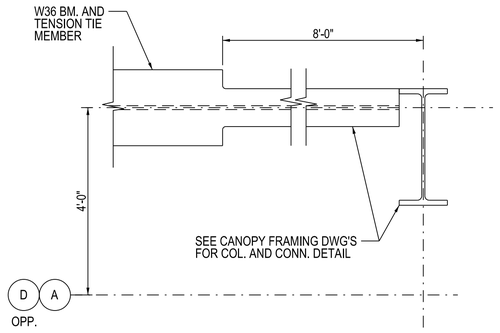

2 SECTION
1" = 1'-0"

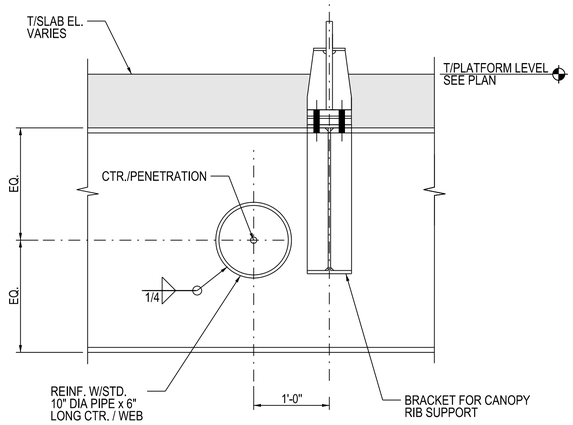

5 TYPICAL SECTION AT PIPE DRAIN PENETRATION
1" = 1'-0"

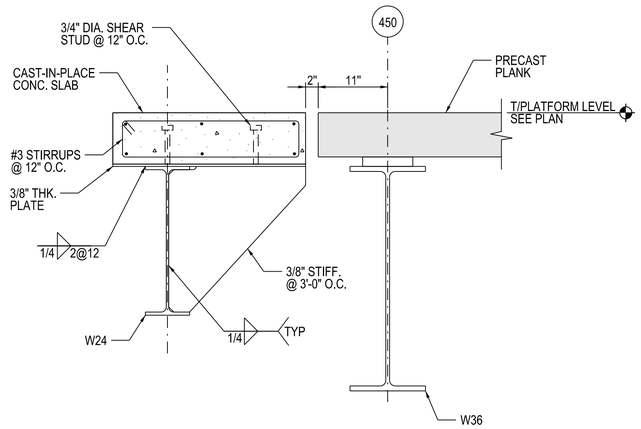

4 SECTION
1" = 1'-0"

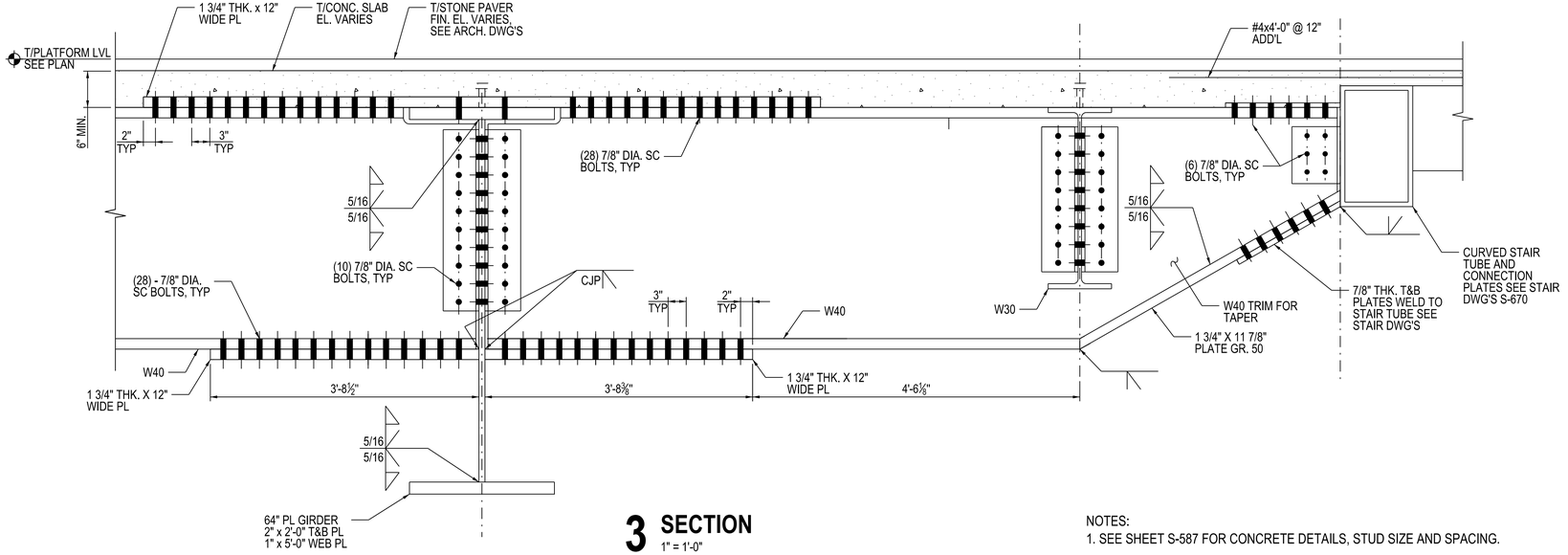

3 SECTION
1" = 1'-0"

NOTES:
1. SEE SHEET S-587 FOR CONCRETE DETAILS, STUD SIZE AND SPACING.

DESIGN BY:	UT									
DRAWN BY:	UT									
CHECKED BY:	JL									
APPROVED BY:	JL	4	7/3/2023	ISSUED FOR BID						
CDOT/APPROVED BY:		NO.	DATE	REVISIONS	DES.	DRW.	CHK.	DCCO	CDOT	

TRANSYSTEMS
222 SOUTH RIVERSIDE PLAZA SUITE 610
CHICAGO, ILLINOIS 60606

SKIDMORE, OWINGS & MERRILL LLP
224 SOUTH MICHIGAN AVENUE, SUITE 1000
CHICAGO, ILLINOIS 60604

GARZA KARHOFF ENGINEERING, LLC
120 NORTH LASALLE STREET, SUITE 1400
CHICAGO, ILLINOIS 60602

CHICAGO DEPARTMENT OF TRANSPORTATION
DIVISION OF ENGINEERING

STATE / LAKE LOOP ELEVATED STATION
200 NORTH STATE STREET, CHICAGO, IL 60601

STRUCTURAL STEEL DETAILS 9

CDOT PROJECT D-1-209

DATE: 7/3/2023

SPEC. NO.

DRAWING NO. S-581

REVISION NO.

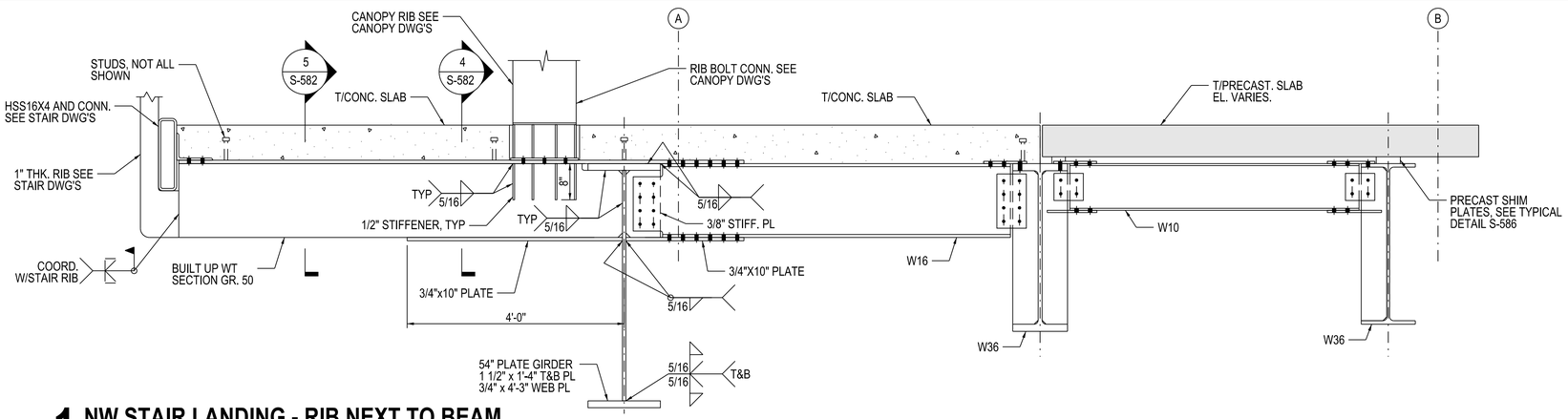

1 NW STAIR LANDING - RIB NEXT TO BEAM
3/4" = 1'-0"

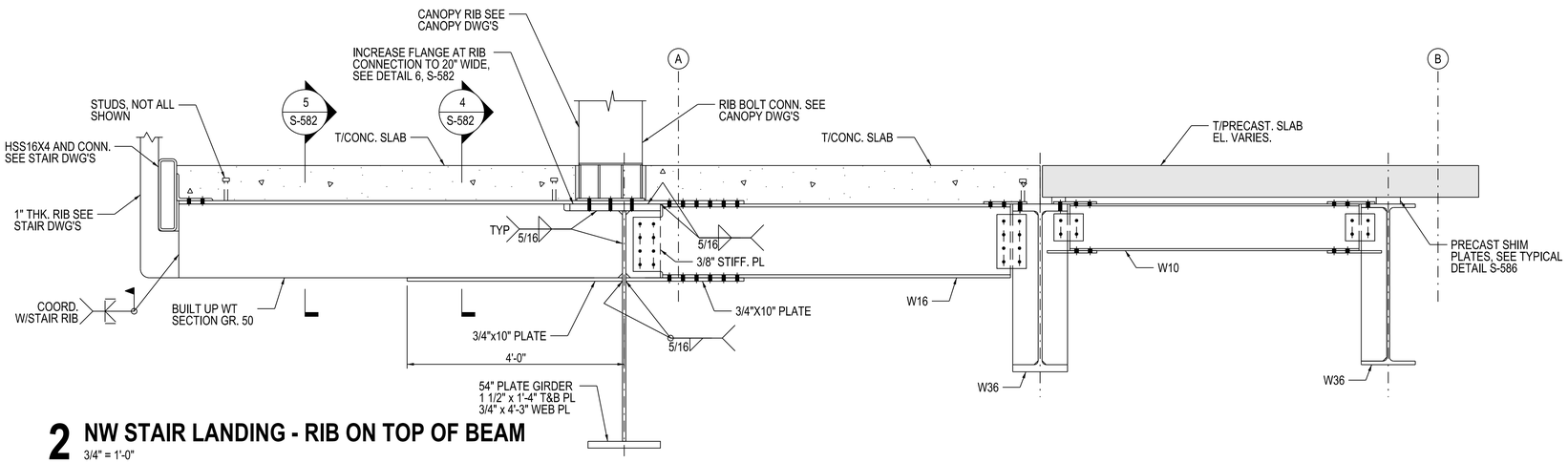

2 NW STAIR LANDING - RIB ON TOP OF BEAM
3/4" = 1'-0"

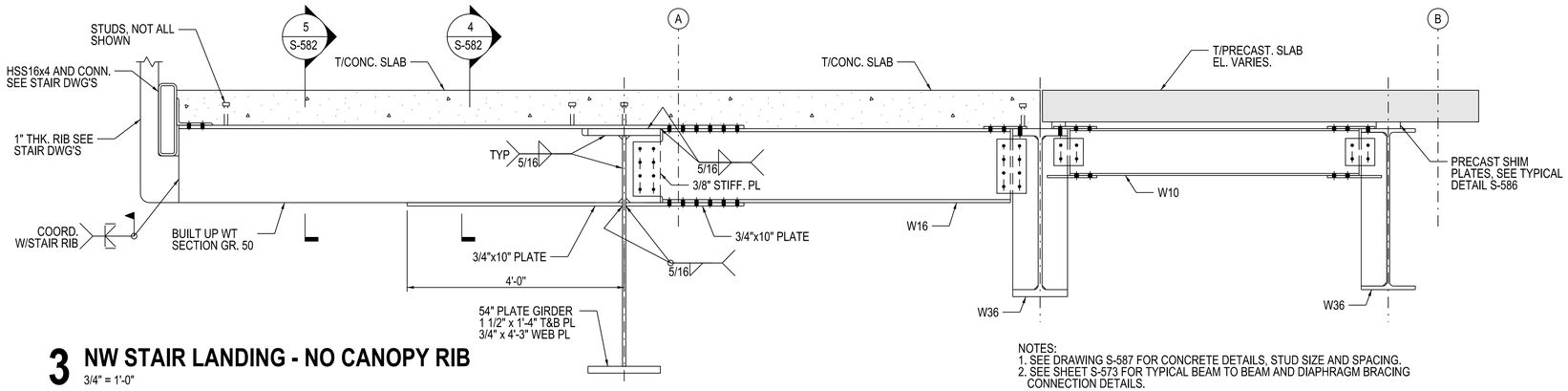

3 NW STAIR LANDING - NO CANOPY RIB
3/4" = 1'-0"

NOTES:
1. SEE DRAWING S-587 FOR CONCRETE DETAILS, STUD SIZE AND SPACING.
2. SEE SHEET S-573 FOR TYPICAL BEAM TO BEAM AND DIAPHRAGM BRACING CONNECTION DETAILS.

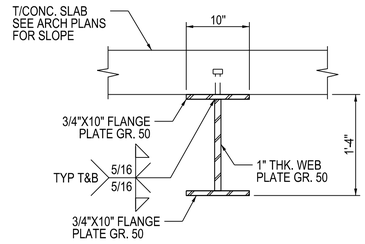

4 BUILT UP SECTION 1
1" = 1'-0"

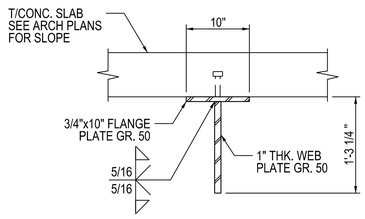

5 BUILT UP SECTION 2
1" = 1'-0"

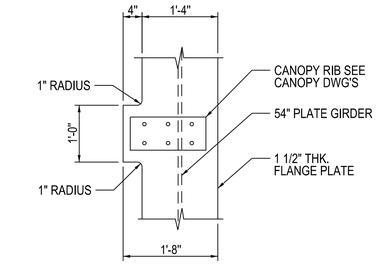

6 PLAN VIEW OF 54" PLATE GIRDER AT RIB ON TOP OF BEAM
3/4" = 1'-0"

DESIGN BY:	EG								
DRAWN BY:	EG								
CHECKED BY:	JL								
APPROVED BY:	JL	4	7/3/2023	ISSUED FOR BID	DSG	DRW	CHK		
CDOT/APPROVED BY:		NO.	DATE	REVISIONS	DES.	DRW.	CHK.	DCCO	CDOT

TRANSYSTEMS
222 SOUTH RIVERSIDE PLAZA SUITE 610
CHICAGO, ILLINOIS 60606

SKIDMORE, OWINGS & MERRILL LLP
224 SOUTH MICHIGAN AVENUE, SUITE 1000
CHICAGO, ILLINOIS 60604

GARZA KARHOFF ENGINEERING, LLC
120 NORTH LASALLE STREET, SUITE 1400
CHICAGO, ILLINOIS 60602

CHICAGO DEPARTMENT OF TRANSPORTATION
DIVISION OF ENGINEERING

STATE / LAKE LOOP ELEVATED STATION
200 NORTH STATE STREET, CHICAGO, IL 60601

STRUCTURAL STEEL DETAILS 10

CDOT PROJECT D-1-209 | DATE: 7/3/2023

SPEC. NO.

DRAWING NO. S-582

REVISION NO.

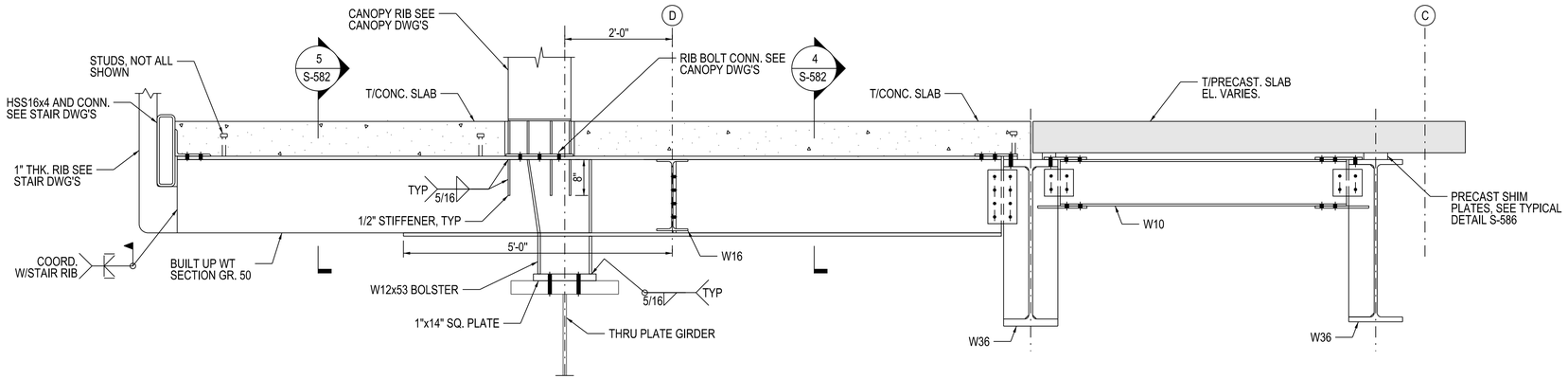

1 SW STAIR LANDING - RIB NEXT TO BEAM

3/4" = 1'-0"

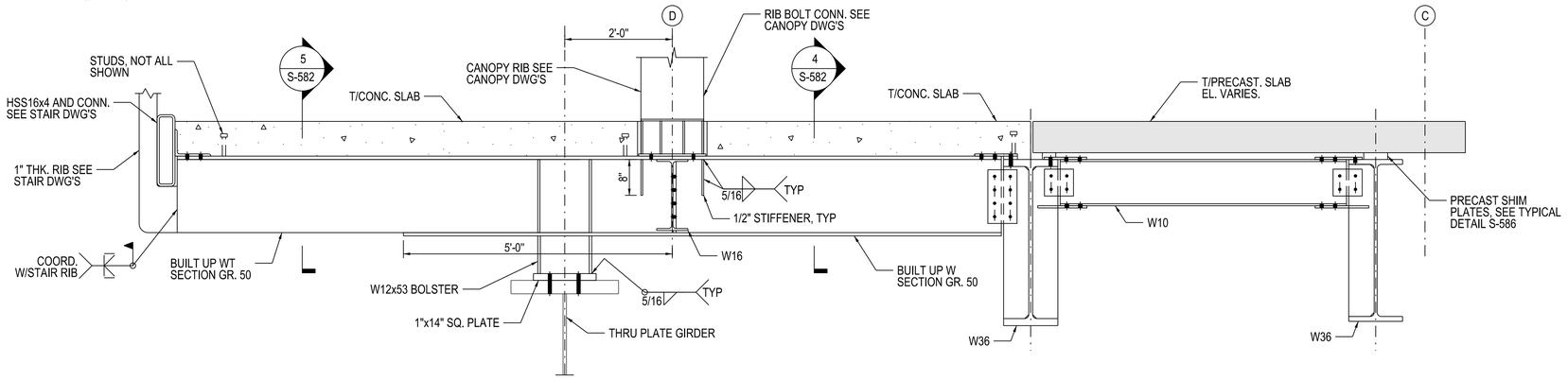

2 SW STAIR LANDING - RIB ON TOP OF BEAM

3/4" = 1'-0"

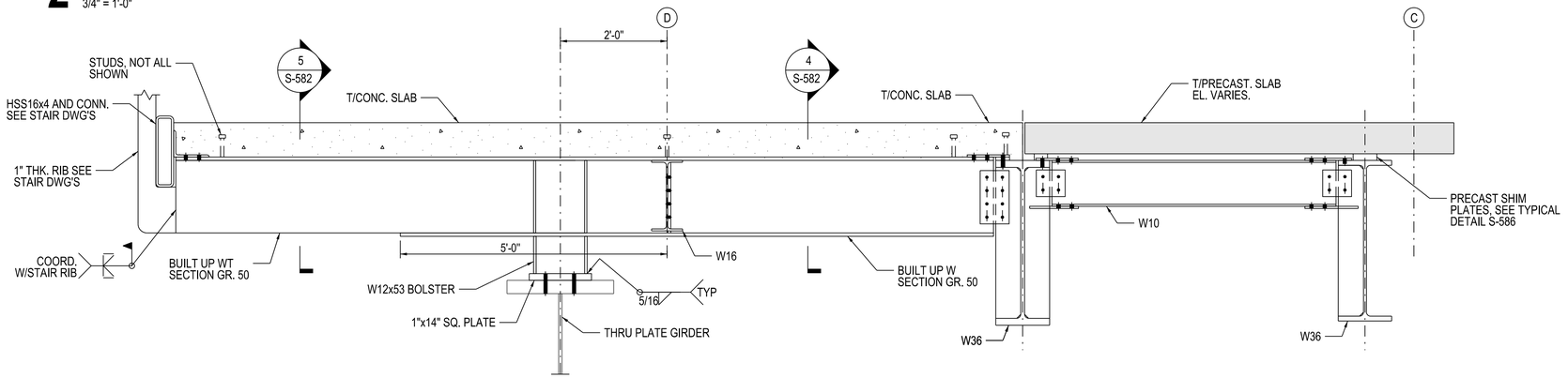

3 SW STAIR LANDING - NO CANOPY RIB

3/4" = 1'-0"

NOTES:
1. SEE DRAWING S-587 FOR CONCRETE DETAILS, STUD SIZE AND SPACING.
2. SEE SHEET S-573 FOR TYPICAL BEAM TO BEAM AND DIAPHRAGM BRACING CONNECTION DETAILS.

DESIGN BY:	EG								
DRAWN BY:	EG								
CHECKED BY:	JL								
APPROVED BY:	JL	4	7/3/2023	ISSUED FOR BID	DSG	DRW	CHK		
CDOT/APPROVED BY:		NO.	DATE	REVISIONS	DES.	DRW.	CHK.	DCCO	CDOT

TRANSYSTEMS
222 SOUTH RIVERSIDE PLAZA SUITE 610
CHICAGO, ILLINOIS 60606

SKIDMORE, OWINGS & MERRILL LLP
224 SOUTH MICHIGAN AVENUE, SUITE 1000
CHICAGO, ILLINOIS 60604

GARZA KARHOFF ENGINEERING, LLC
120 NORTH LASALLE STREET, SUITE 1400
CHICAGO, ILLINOIS 60602

CHICAGO DEPARTMENT OF TRANSPORTATION
DIVISION OF ENGINEERING

STATE / LAKE LOOP ELEVATED STATION
200 NORTH STATE STREET, CHICAGO, IL 60601

STRUCTURAL STEEL DETAILS 11

CDOT PROJECT D-1-209

DATE: 7/3/2023

SPEC. NO.

DRAWING NO. S-583

REVISION NO.

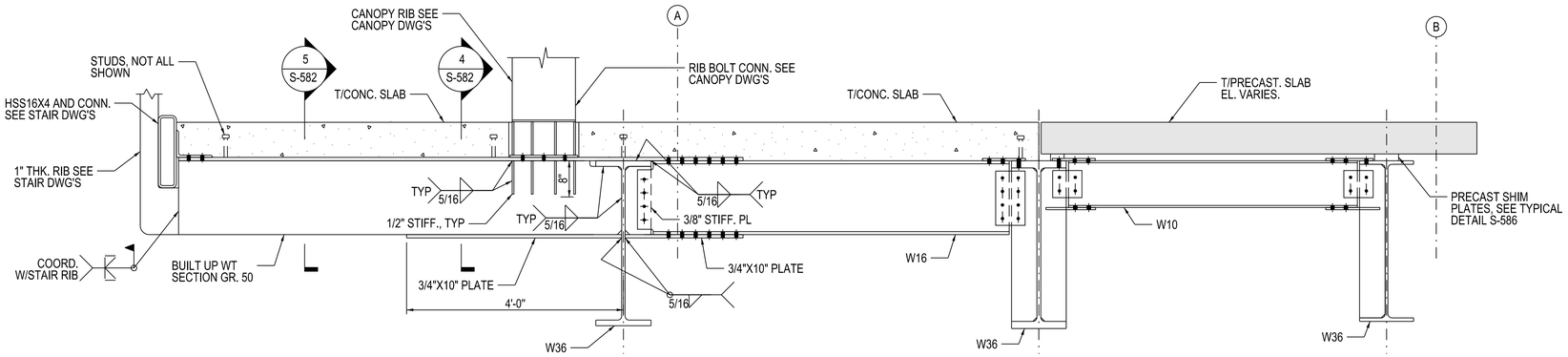

1 NE STAIR LANDING - RIB NEXT TO BEAM

3/4" = 1'-0"

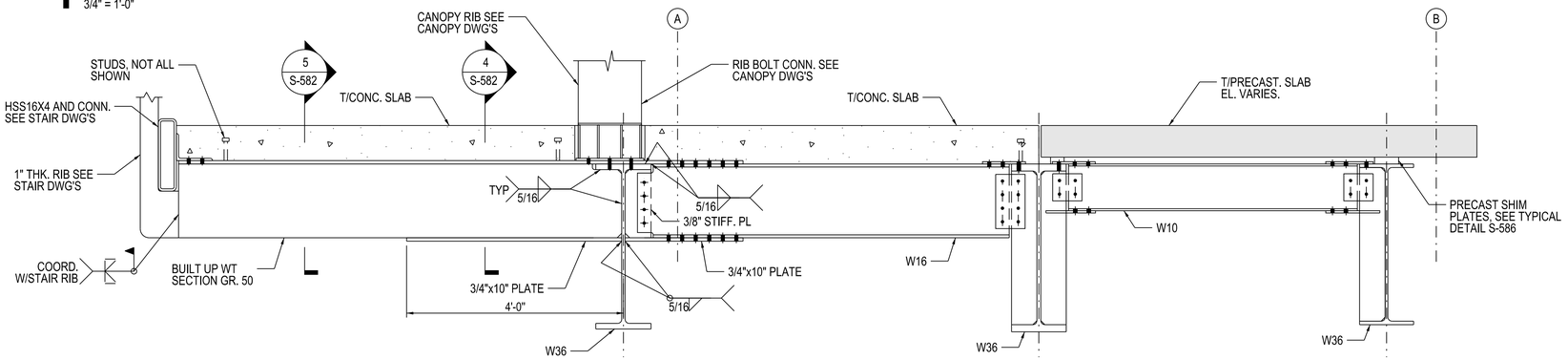

2 NE STAIR LANDING - RIB ON TOP OF BEAM

3/4" = 1'-0"

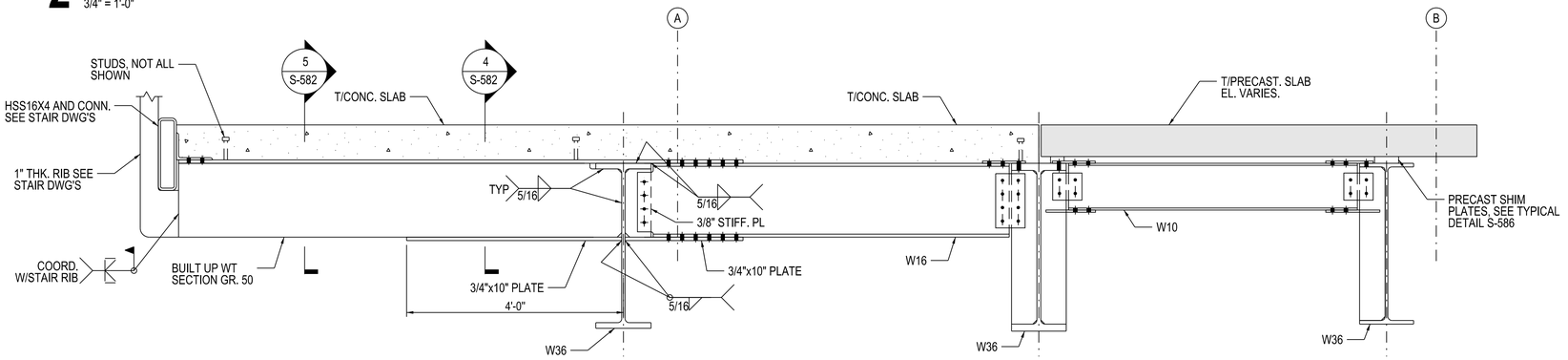

3 NE STAIR LANDING - NO CANOPY RIB

3/4" = 1'-0"

NOTES:
1. SEE DRAWING S-587 FOR CONCRETE DETAILS, STUD SIZE AND SPACING.
2. SEE SHEET S-573 FOR TYPICAL BEAM TO BEAM AND DIAPHRAGM BRACING CONNECTION DETAILS.

DESIGN BY:	EG								
DRAWN BY:	EG								
CHECKED BY:	JL								
APPROVED BY:	JL	4	7/3/2023	ISSUED FOR BID	DSG	DRW	CHK		
CDOT/APPROVED BY:		NO.	DATE	REVISIONS	DES.	DRW.	CHK.	DCCO	CDOT

TRANSYSTEMS
222 SOUTH RIVERSIDE PLAZA SUITE 610
CHICAGO, ILLINOIS 60606

SKIDMORE, OWINGS & MERRILL LLP
224 SOUTH MICHIGAN AVENUE, SUITE 1000
CHICAGO, ILLINOIS 60604

GARZA KARHOFF ENGINEERING, LLC
120 NORTH LASALLE STREET, SUITE 1400
CHICAGO, ILLINOIS 60602

CHICAGO DEPARTMENT OF TRANSPORTATION
DIVISION OF ENGINEERING

STATE / LAKE LOOP ELEVATED STATION
200 NORTH STATE STREET, CHICAGO, IL 60601

STRUCTURAL STEEL DETAILS 12

CDOT PROJECT D-1-209 | DATE: 7/3/2023

SPEC. NO.

DRAWING NO. S-584

REVISION NO.

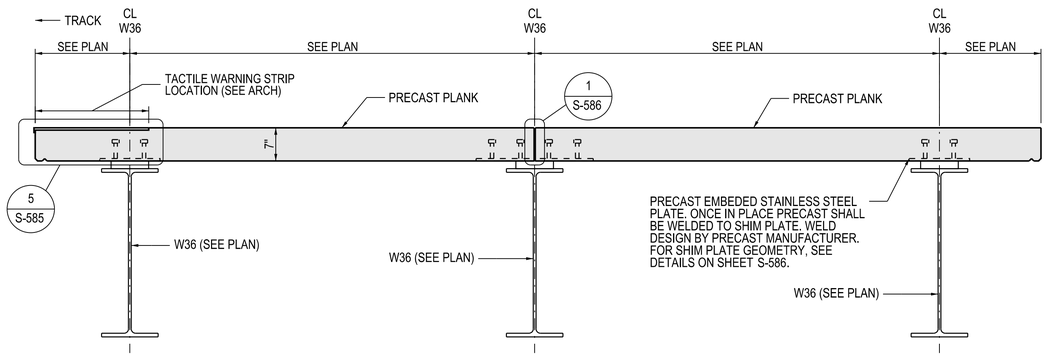

1 TYPICAL PRECAST SLAB SECTION

3/4" = 1'-0"

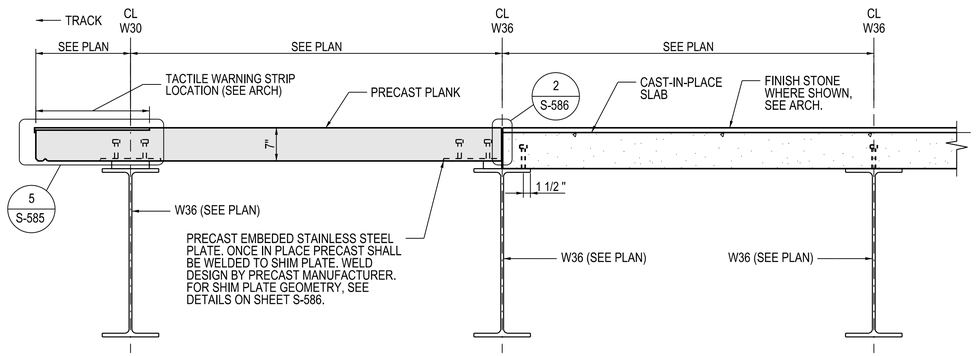

2 TYPICAL PRECAST SLAB SECTION AT CAST-IN-PLACE SLAB

3/4" = 1'-0"

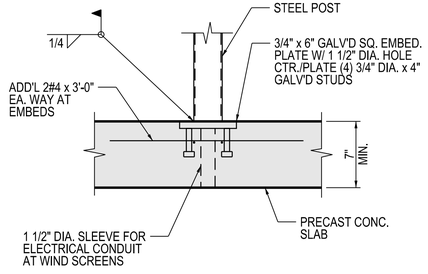

NOTES:
1. EMBED DETAIL FOR HIGH BARRIER, POST CONNECTION FOR ROTO-GATE AND/OR WIND SCREENS.
2. G.C. TO COORDINATE PRE-FABRICATED CONNECTION DETAILS WITH MANUFACTURER. G.C. TO INCLUDE IN CONTRACT TO SUPPLY ADDITIONAL EMBEDS REQUIRED BY MANUFACTURER.

3 TYPICAL POST CONNECTION DETAIL AT PRECAST SLABS

1-1/2" = 1'-0"

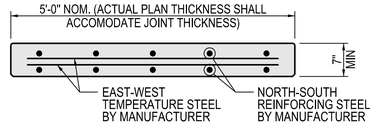

4 PRECAST SLAB SECTION REINFORCEMENT

3/4" = 1'-0"

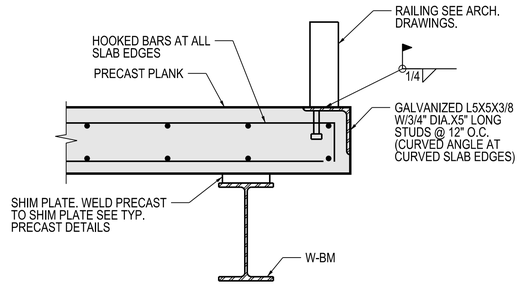

6 SLAB EDGE RAILING DETAIL

1-1/2" = 1'-0"

NOTES:

1. THE ENGINEER IS DELEGATING TO THE PRECAST MANUFACTURER'S REPRESENTATIVE THE DESIGN OF THE PRECAST SYSTEM.
2. PRECAST MANUFACTURER SHALL HAVE A LICENSED STRUCTURAL ENGINEER IN THE STATE OF ILLINOIS PROVIDE CALCULATIONS AND DESIGN OF ALL PRECAST PANELS.
3. REINFORCEMENT AND CONNECTION HARDWARE, WHERE SHOWN ON DRAWINGS, INDICATES MINIMUM REQUIREMENTS. FINAL QUANTITIES AND ARRANGEMENTS TO BE DETERMINED BY THE PRECAST CONCRETE MANUFACTURERS' DESIGN AND ARCHITECTS' APPROVAL.
4. REFER TO GENERAL NOTES, DESIGN REQUIREMENTS FOR LIVE LOADS. ADD AN ADDITIONAL 25 PSF OF DEAD LOAD FOR CURRENT AND FUTURE CONDUIT LOADS. PRECAST PLANK SHALL BE DESIGNED FOR GLANCING BLOW TO PLATFORM STRUCTURE.
5. PRECAST MANUFACTURER SHALL PROVIDE ALL EMBEDS TO ALIGN WITH SHIMS AND PROVIDE PROPER SUPPORT FOR THEIR DESIGN. THE PRECAST MANUFACTURER IS SOLELY RESPONSIBLE FOR FINAL COORDINATION OF SHIMS AND EMBED PLATES. MINIMUM OF 4 POINTS OF CONNECTIONS AT EACH PRECAST PLANK REQUIRED.
6. PRECASTER SHALL ALIGN TACTILE WARNING STRIP PANEL WITH PRECAST PANELS.
7. PRECASTER SHALL DESIGN EACH EMBED FOR MIN 250 PLF UPLIFT AND 100 PLF HORIZONTAL FORCE OR AS CALCULATED BY PRECAST CONTRACTOR, WHICHEVER IS GREATER.
8. PRECASTER SHALL LIMIT LOAD DEFLECTION OF PRECAST TO L/480.
9. FOR PRECAST CONCRETE MATERIAL PROPERTIES, SEE CONCRETE MATERIAL GENERAL NOTES ON S-002.
10. DO NOT PROVIDE INSERTS OR ATTACHMENTS ON UPPER SURFACE OF PRECAST PLANKS. INSERT LIFTING LUG WITHIN THE TACTILE EDGE AREA THAT WILL BE LATER COVERED IS ACCEPTABLE.
11. TOP SURFACE OF PRECAST IS TO BE PROTECTED DURING CONSTRUCTION.
12. ALL REINFORCEMENT SHALL BE EPOXY COATED. NO PRE-STRESSED OR POST TENSIONED STRANDS ALLOWED.

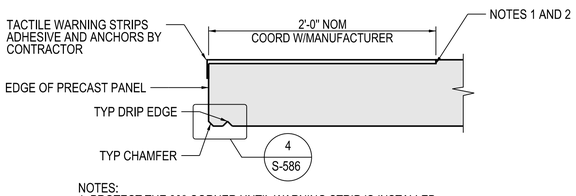

NOTES:
1. PROTECT THE 90° CORNER UNTIL WARNING STRIP IS INSTALLED.
2. ALIGN T/CONC WITH T/TACTILE WARNING STRIP; GRIND CONCRETE IF STEP EXCEEDS 1/8".
3. TACTILE EGDE MUST NOT SPAN OVER EXPANSION JOINTS.

5 TYPICAL PRECAST AT TRACK EDGE

1-1/2" = 1'-0"

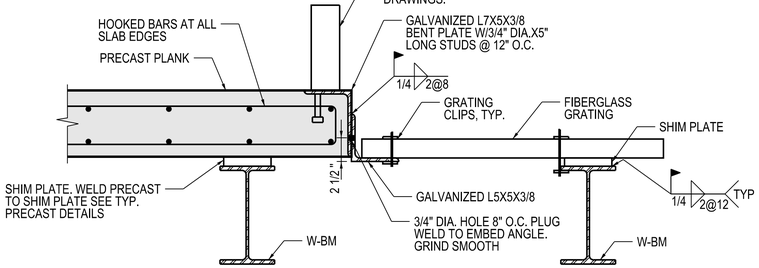

7 SLAB EDGE RAILING GRATING DETAIL

1-1/2" = 1'-0"

DESIGN BY:	EG								
DRAWN BY:	EG								
CHECKED BY:	JL								
APPROVED BY:	JL	4	7/3/2023	ISSUED FOR BID					
CDOT/APPROVED BY:		NO.	DATE	REVISIONS	DES.	DRW.	CHK.	DCCO	CDOT

TRANSYSTEMS
222 SOUTH RIVERSIDE PLAZA SUITE 610
CHICAGO, ILLINOIS 60606

SKIDMORE, OWINGS & MERRILL LLP
224 SOUTH MICHIGAN AVENUE, SUITE 1000
CHICAGO, ILLINOIS 60604

GARZA KARHOFF ENGINEERING, LLC
120 NORTH LASALLE STREET, SUITE 1400
CHICAGO, ILLINOIS 60602

CHICAGO DEPARTMENT OF TRANSPORTATION
DIVISION OF ENGINEERING

STATE / LAKE LOOP ELEVATED STATION
200 NORTH STATE STREET, CHICAGO, IL 60601

SPEC. NO.

PRECAST CONCRETE DETAILS 1

DRAWING NO.
S-585

CDOT PROJECT D-1-209 | DATE: 7/3/2023 | REVISION NO.

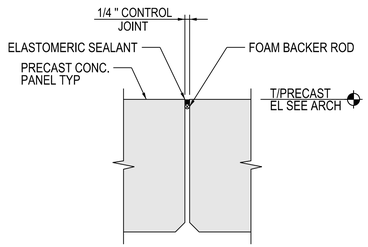

1 TYPICAL PRECAST CONTROL JOINT
3"=1'-0"

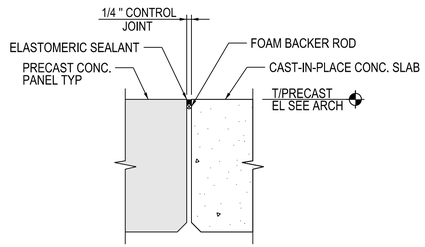

2 PRECAST TO CAST-IN-PLACE CONTROL JOINT
3"=1'-0"

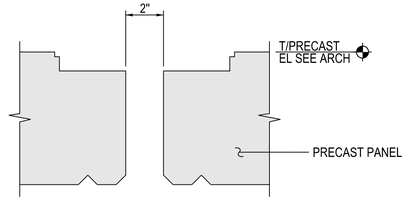

NOTES:
1. PRECAST CONTRACTOR TO COORDINATE NOTCH SIZE AND LOCATION WITH EXPANSION JOINT MANUFACTURER.
2. DESIGN JOINT COVER TO ACCOMODATE ± 2" OF MOVEMENT PERPENDICULAR TO THE JOINT.
3. SEE ARCH. PLANS FOR EXPANSION ASSEMBLY.

3 TYPICAL PRECAST EXPANSION JOINT
3"=1'-0"

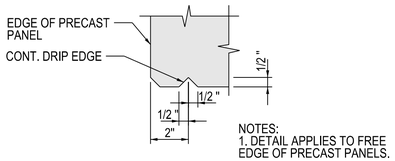

NOTES:
1. DETAIL APPLIES TO FREE EDGE OF PRECAST PANELS.

4 TYPICAL WATER DRIP DETAIL
3"=1'-0"

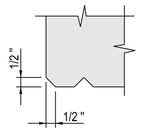

NOTES:
1. DETAIL APPLIES TO SIDES/BOTTOM CORNERS OF PRECAST PANELS.

5 TYPICAL SIDES AND BOTTOM CHAMFER DETAIL
3"-1'-0"

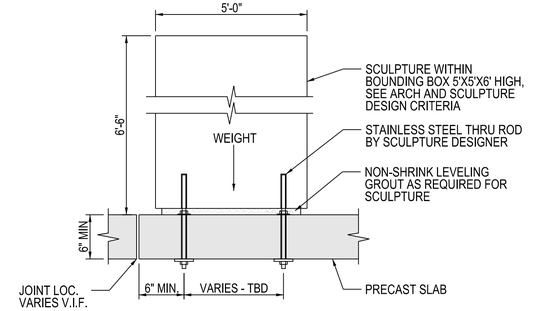

NOTES:
1. ART WORK IS COMMISSIONED BY THE CITY OF CHICAGO DEPARTMENT OF CULTURAL AFFAIRS AND SPECIAL EVENTS (DCASE).
2. ART WORK DESIGNER WILL PROVIDE DESIGN AND ANCHORAGE REQUIREMENTS.
3. ART WORK DESIGNER WILL ENGAGE THEIR OWN LICENSED STRUCTURAL ENGINEER IN THE STATE OF ILLINOIS TO DESIGN AND PROVIDE FINAL ANCHORAGE DESIGN, QUANTITY, SPACING AND DETAILS TO THE CONTRACTOR.
4. ALL ANCHORS TO BE LOCATED 6" FROM EDGE OF SLABS.
5. ALL ANCHORS TO BE STAINLESS STEEL THRU RODS IN PRE -DRILLED HOLES OR SLEEVED HOLES.
6. WEIGHT OF SCULPTURE WILL NOT EXCEED 1,000 LBS.
7. CONNECTIONS WILL BE DESIGNED BY ART WORK DESIGNER FOR OVERTURNING FORCES DUE TO GRAVITY, WIND, SEISMIC OR OTHER LATERAL LOADING CONDITIONS.
8. THE CONTRACTOR MUST COORDINATE WITH DCASE/ART DESIGNER THE FINAL LOCATION OF ALL COMMISSIONED ART WORK, ART WORK ANCHORAGE AND CONDUITS.
9. THE CONTRACTOR MUST PROVIDE DESIGN OF PRECAST SLABS FOR ART WORK LOADING, INCLUDING ANY ADDITIONAL REINFORCEMENT OR MODIFIED DESIGNS IN THE VICINITY OF ART WORK PIECES, AND ALL NECESSARY SLEEVES FOR INSTALLATION OF ART WORK ANCHORAGE. THIS DESIGN MUST BE SHOWN ON THE SHOP DRAWING SUBMITTALS.
10. THE CONTRACTOR MUST COORDINATE SCHEDULE WITH DCASE/ART DESIGNER FOR FABRICATION OF ART WORK, PRECAST SLABS, DELIVERY AND INSTALLATION.
11. ART DESIGNER MUST PROVIDE TRANSPORT OF ART WORK TO THE PROJECT SITE AT STREET LEVEL. CONTRACTOR WILL BE RESPONSIBLE FOR INSTALLATION IN PLACE IN ACCORDANCE WITH ART WORK ANCHORAGE REQUIREMENTS. THE CONTRACTOR WILL BE RESPONSIBLE FOR STORING AND PROTECTING THE ART WORK PRIOR TO INSTALLATION, WILL NEED TO COORDINATE INSTALLATION WITH THE ART WORK DESIGNER IF THE ART WORK DESIGNER DESIRES TO BE PRESENT DURING INSTALLATION, AND WILL BE RESPONSIBLE FOR ANY DAMAGE TO THE ART WORK CAUSED BY INSTALLATION OR CONSTRUCTION ACTIVITIES AFTER INSTALLATION.
12. THE CONTRACTOR MUST INSTALL TEMPORARY PROTECTION AROUND THE ART WORK ONCE INSTALLED

8 PROPOSED SCULPTURE BASE DETAIL AND LOADING CRITERIA
N.T.S.

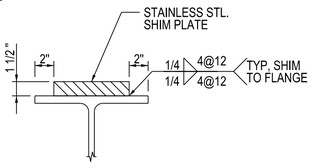

NOTES:
1. ADDITIONAL SHIM PLATE THICKNESS MAY BE ADJUSTED FOR LEVELING OF PRECAST PLANKS. MULTIPLE PLATE SHALL BE WELDED TOGETHER.

6 TYPICAL SHIM GEOMETRY AT PLATFORM GIRDER
1-1/2" = 1'-0"

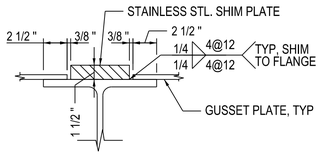

NOTES:
1. ADDITIONAL SHIM PLATE THICKNESS MAY BE ADJUSTED FOR LEVELING OF PRECAST PLANKS. MULTIPLE PLATE SHALL BE WELDED TOGETHER.

7 TYPICAL SHIM GEOMETRY AT PLATFORM GIRDER BRACE CONNECTION
1-1/2" = 1'-0"

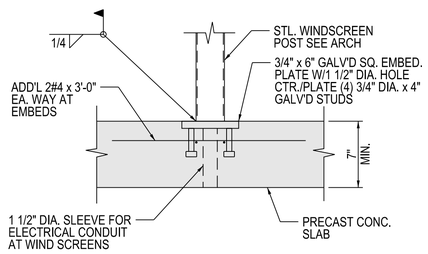

NOTES:
1. G.C. TO COORDINATE REQUIRED LOCATIONS WITH ARCH PLANS

9 TYPICAL WINDSCREEN POST CONNECTION DETAIL
1-1/2" = 1'-0"

DESIGN BY:	EG								
DRAWN BY:	EG								
CHECKED BY:	JL								
APPROVED BY:		4	7/3/2023	ISSUED FOR BID					
CDOT/APPROVED BY:		NO.	DATE	REVISIONS	DES.	DRW.	CHK.	DCCO	CDOT

TRANSYSTEMS
222 SOUTH RIVERSIDE PLAZA SUITE 610
CHICAGO, ILLINOIS 60606

SKIDMORE, OWINGS & MERRILL LLP
224 SOUTH MICHIGAN AVENUE, SUITE 1000
CHICAGO, ILLINOIS 60604

GARZA KARHOFF ENGINEERING, LLC
120 NORTH LASALLE STREET, SUITE 1400
CHICAGO, ILLINOIS 60602

CHICAGO DEPARTMENT OF TRANSPORTATION
DIVISION OF ENGINEERING

STATE / LAKE LOOP ELEVATED STATION
200 NORTH STATE STREET, CHICAGO, IL 60601

PRECAST CONCRETE DETAILS 2

SPEC. NO.

DRAWING NO. S-586

CDOT PROJECT D-1-209

DATE: 7/3/2023

REVISION NO.

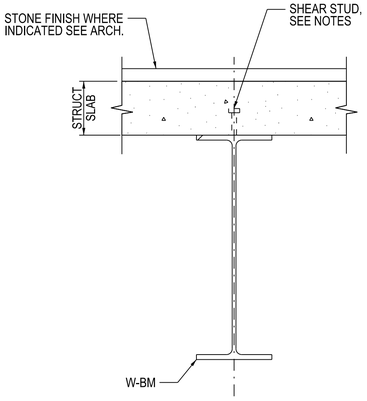

1 CAST IN PLACE CONCRETE SLAB ON STEEL BEAM DETAIL

1" = 1'-0"

NOTES:
1. SPACE STUDS IN ONE ROW CENTERED ON THE BEAM U.N.O.
2. ALL STEEL BEAMS SUPPORTING CAST IN PLACE FORMED CONC SLABS SHALL HAVE 3/4" DIA. x 5" LONG STUDS @12" O.C. U.N.O.
3. ALL DIAGRAMS REPRESENT IDEALIZED CONDITIONS. ACTUAL FRAMING CONFIGURATION MAY REQUIRE ADDITIONAL INTERPRETATION.
4. SHEAR STUDS WILL HAVE 1 1/2" MIN. EDGE DISTANCE TO STEEL FLANGE WHERE CONCRETE EDGES ARE NEAR CENTER OF BEAM. SEE 2/S-585.

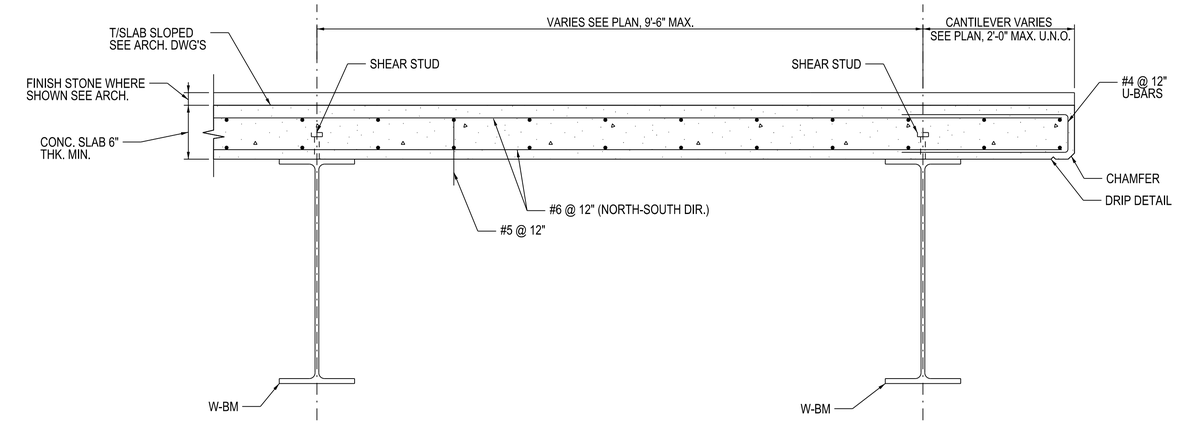

2 TYPICAL CAST IN PLACE REINFORCEMENT DETAIL

1" = 1'-0"

NOTES:
1. ALL REINFORCEMENT EPOXY COATED.
2. SEE SECTIONS FOR ADDITIONAL REINFORCEMENT THAT MAY BE REQUIRED IN ADDITIONAL TO TYPICAL SLAB REINFORCEMENT.

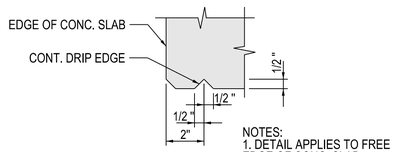

NOTES:
1. DETAIL APPLIES TO FREE EDGE OF CONC. SLAB.

3 TYPICAL WATER DRIP DETAIL

3"=1'-0"

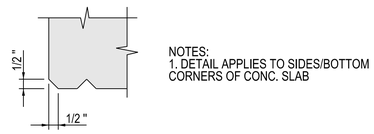

NOTES:
1. DETAIL APPLIES TO SIDES/BOTTOM CORNERS OF CONC. SLAB

4 TYPICAL SIDES AND BOTTOM CHAMFER DETAIL

3"-1'-0"

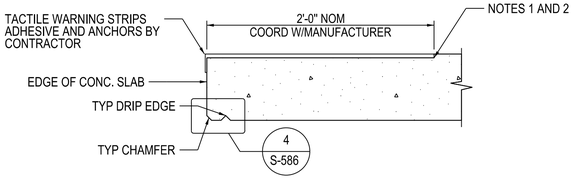

NOTES:
1. PROTECT THE 90° CORNER UNTIL WARNING STRIP IS INSTALLED.
2. ALIGN T/CONC WITH T/TACTILE WARNING STRIP; GRIND CONCRETE IF STEP EXCEEDS 1/8".
3. TACTILE EGDE MUST NOT SPAN OVER EXPANSION JOINTS.

5 TYPICAL CONC. SLAB AT TRACK EDGE

1-1/2" = 1'-0"

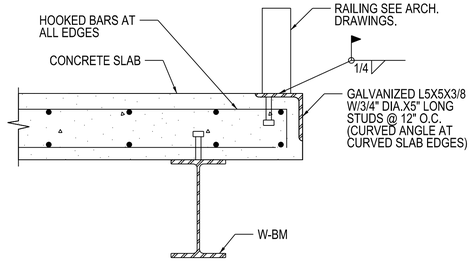

6 SLAB EDGE RAILING DETAIL

1-1/2" = 1'-0"

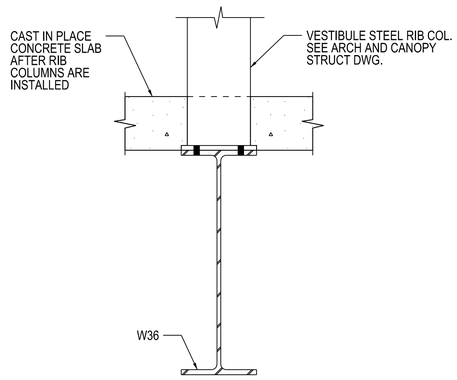

7 SECTION AT VESTIBULE RIB COLUMN AT SE STAIR

1" = 1'-0"

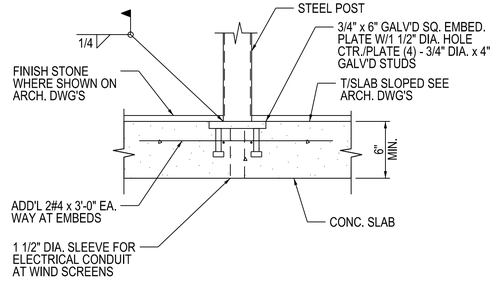

NOTES:
1. EMBED DETAIL FOR HIGH BARRIER, POST CONNECTION FOR ROTO-GATE AND/OR WIND SCREENS.
2. G.C. TO COORDINATE PRE-FABRICATED CONNECTION DETAILS WITH MANUFACTURER. G.C. TO INCLUDE IN CONTRACT TO SUPPLY ADDITIONAL EMBEDS REQUIRED BY MANUFACTURER.

8 TYPICAL POST CONNECTION DETAIL AT CAST-IN-PLACE CONCRETE SLABS

1-1/2" = 1'-0"

NOTES:
1. DETAILS ON THIS SHEET PERTAIN TO SHEETS S-103, S-104, S-117 TO S-122, S-560 TO S-587.

DESIGN BY:	UT								
DRAWN BY:	UT								
CHECKED BY:	JL								
APPROVED BY:		4	7/3/2023	ISSUED FOR BID					
CDOT/APPROVED BY:		NO.	DATE	REVISIONS	DES.	DRW.	CHK.	DCCO	CDOT

TRANSYSTEMS
222 SOUTH RIVERSIDE PLAZA SUITE 610
CHICAGO, ILLINOIS 60606

SKIDMORE, OWINGS & MERRILL LLP
224 SOUTH MICHIGAN AVENUE, SUITE 1000
CHICAGO, ILLINOIS 60604

GARZA KARHOFF ENGINEERING, LLC
120 NORTH LASALLE STREET, SUITE 1400
CHICAGO, ILLINOIS 60602

CHICAGO DEPARTMENT OF TRANSPORTATION
DIVISION OF ENGINEERING

STATE / LAKE LOOP ELEVATED STATION
200 NORTH STATE STREET, CHICAGO, IL 60601

CONCRETE SLAB DETAILS

CDOT PROJECT D-1-209 | DATE: 7/3/2023

SPEC. NO.

DRAWING NO. S-587

REVISION NO.

CANOPY - STRUCTURAL SYSTEM DESCRIPTION

GENERAL

THE STATE & LAKE STREET CTA STATION INCLUDES A CANOPY STRUCTURE THAT SPANS OVER, AND COVERS, THE NORTH AND SOUTH PLATFORM AREAS ALONG THE FULL LENGTH OF THE STATION, INCLUDING THE LINEAR PLATFORM AREAS EXTENDING TO THE EAST AND WEST OF THE MAIN STATION (THE "PLATFORM CANOPIES"), AS WELL AS AT THE MAIN STATION HOUSE ITSELF (THE MAIN STATION "DOME CANOPY"). THE CANOPY STRUCTURE IS COMPRISED OF STRUCTURAL STEEL ELEMENTS SUPPORTING GLASS PANELS.

PLATFORM CANOPY STRUCTURE

THE STRUCTURE TO SUPPORT THIS ENCLOSURE IS COMPRISED OF CURVED STRUCTURAL STEEL PLATE 'RIB' ELEMENTS WHICH SPAN BETWEEN THE SOUTH EDGE OF THE SOUTHERN PLATFORM AND THE NORTH EDGE OF THE NORTHERN PLATFORM. THE MAIN RIB ELEMENTS ARE SPACED AT 10' ON-CENTER AND REPEATED ALONG THE LENGTH OF THE PLATFORMS TO CREATE AN EXTRUDED CANOPY FORM. THE INDIVIDUAL RIB PLATE GEOMETRY IS DEFINED BY A SYSTEM OF CIRCULAR ARCS.

STRUCTURAL STEEL PLATE TRANSVERSE MEMBERS SPACED AT 2'-6" ON-CENTER SPAN 10' BETWEEN MAIN RIB PLATES FOR SUPPORT OF THE INDIVIDUAL GLASS PANELS, WHICH MEASURE 5' X 2'-6" TYPICALLY. SECONDARY MEMBERS SPAN PARALLEL TO THE MAIN RIB PLATES TO PROVIDE 4-SIDED GLAZING SUPPORT FOR EACH PANEL AT 5' ON CENTER. THIS GRID OF PRIMARY RIBS AT 10' SPACING ALONG WITH TRANSVERSE AND SECONDARY MEMBERS, CREATES A FRAME STRUCTURE FOR LATERAL STABILITY.

REFER TO THIS SHEET AND S-610 FOR NOTES RELATED TO THE FABRICATION AND ERECTION OF THE PLATFORM CANOPY STRUCTURE.

MAIN STATION DOME CANOPY STRUCTURE

COVERAGE OF THE MAIN STATION HOUSE AND CENTRAL PLATFORM IS PROVIDED BY A TWO-WAY GRID OF TAPERED, BUILT-UP STRUCTURAL STEEL 'T' SECTIONS ARRANGED GENERALLY IN THE NORTH-SOUTH AND EAST-WEST DIRECTIONS, FOLLOWING THE ARRANGEMENT OF THE GLAZING PANELIZATION. THE 'GRID' IS SUPPORTED AT THE CORNERS BY THE FOUR ELEVATOR/ESCALATOR TOWER STRUCTURES. THE CANOPY ROOF GEOMETRY CREATES A 'DOME' THAT SPANS APPROXIMATELY 120' BETWEEN SUPPORT POINTS.

THIS TWO-WAY STRUCTURAL STEEL GRID OF T-SECTIONS IS RIGIDLY CONNECTED AT EACH NODE IN ORDER TO CREATE AN IN-PLANE (IN-SURFACE) VIERENDEEL FRAME THAT RESISTS PRIMARILY AXIAL AND BENDING FORCES.

VERTICAL AND HORIZONTAL REACTIONS AT THE CANOPY SUPPORT POINTS ARE RESISTED BY THE STRUCTURAL STEEL BRACED FRAMES OF THE ELEVATOR/ESCALATOR TOWERS WHICH ACT AS BUTTRESSES. VERTICAL LOADS ARE CARRIED DOWN TO THE FOUNDATIONS. FOUR (4) TENSION TIES, INTEGRATED INTO THE PLATFORM SUPPORT FRAMING, RESOLVE THE EAST-WEST HORIZONTAL THRUSTS FROM THE ARCHING DOME CANOPY ABOVE. THESE 4 TENSION TIES ARE FRACTURE CRITICAL MEMBERS (FCM). SECONDARY, NORTH-SOUTH HORIZONTAL THRUSTS ARE RESOLVED THROUGH THE PLATFORM FRAMING AND UNDERLYING BENT FRAMES.

REFER TO THIS SHEET AND S-620 FOR NOTES RELATED TO THE FABRICATION AND ERECTION OF THE MAIN STATION CANOPY DOME STRUCTURE.

FLYOVER BRIDGE

A 'FLYOVER' BRIDGE SPANS BETWEEN THE NORTHERN AND SOUTHERN PLATFORMS, ELEVATED ABOVE THE PLATFORM AND TRACKS APPROXIMATELY 13'. THE BRIDGE IS INTENDED TO CARRY PEDESTRIANS BETWEEN THE PAID ZONES OF THE NORTHERN AND SOUTHERN PLATFORMS.

THE BRIDGE STRUCTURE CONSISTS OF TWO TIED ARCHES - ONE EACH ON THE WESTERN AND EASTERN SIDES OF THE BRIDGE. THE COMPRESSION ARCHES RUN PARALLEL TO, AND FOLLOW THE PROFILE OF THE TYPICAL ADJACENT CANOPY RIBS. THE TENSION TIES CONNECT THE ENDS OF THE COMPRESSION ARCHES TO RESOLVE THE HORIZONTAL THRUST OF THE ARCHES, AND ARE POSITIONED NOMINALLY AT THE ELEVATION OF THE HAND RAIL OF THE BRIDGE. THE TIED ARCH STRUCTURE IS SUPPORTED ON STEEL COLUMNS THAT ARE IN TURN SUPPORTED BY THE PLATFORM FRAMING.

CANOPY - DESIGN CRITERIA AND PARAMETERS

GENERAL

REFER TO THE GENERAL STRUCTURAL NOTES AND REQUIREMENTS ON S-001, S-002 & S-003, ADHERE TO THOSE NOTES AND REQUIREMENTS FOR THE CONSTRUCTION OF THE CANOPY AND ASSOCIATED COMPONENTS, IN ADDITION TO THE SPECIAL CANOPY DESIGN AND CONSTRUCTION NOTES SPECIFIED HEREIN. THE SPECIAL CANOPY NOTES GOVERN IN THE CASE OF THE GENERAL NOTES, AND THE SPECIAL CANOPY NOTES ADDRESSING THE SAME TOPIC OR CONDITION.

CODES & STANDARDS

1. CHICAGO BUILDING CODE (CBC) 2019, TITLE 14B
2. INTERNATIONAL BUILDING CODE (IBC) 2018 - INTERNATIONAL CODE COUNCIL
3. AISC 360 - AMERICAN INSTITUTE OF STEEL CONSTRUCTION, SPECIFICATION FOR STEEL BUILDINGS 2016
4. ASCE7 - AMERICAN SOCIETY OF CIVIL ENGINEERS, MINIMUM DESIGN LOADS AND ASSOCIATED CRITERIA FOR BUILDINGS AND OTHER STRUCTURES, 2016
5. CTA INFRASTRUCTURE DESIGN CRITERIA MANUAL (IDCM), REV. 06, CHAPTER 7: STRUCTURAL (2017)

DESIGN LOADS

REFER TO CANOPY LOADING DIAGRAMS ON S-602A & S-602B

MATERIALS

STRUCTURAL STEEL:	
BEAMS & GIRDERS:	ASTM A992, GRADE 50 U.N.O.
COLUMNS:	ASTM A992, GRADE 50 U.N.O.
HSS:	
RECTANGULAR:	ASTM A500C fy = 50 ksi
CIRCULAR:	ASTM A500C fy = 46 ksi
PLATES:	ASTM A572, GRADE 50 U.N.O.
ANGLES & CHANNELS:	ASTM A36 FY = 36 KSI
CONNECTIONS:	ASTM A572 GRADE 50 U.N.O.
BOLTS:	ASTM F3125 GROUP A / Gr. A325
SCREWS:	SAE J429, GRADE 5 U.N.O.
WELDING:	
E70XX ELECTRODES (MIN.)	
CONFORM TO ANSI/AWS D1.1 SPECIFICATIONS	

MINIMUM WELDS

MINIMUM WELD SIZES RELATIVE TO THE THICKNESS OF CONNECTING PLATE ('T'), UNO:

SINGLE SIDED FILLET WELD: 1.0 x T
DOUBLE SIDED FILLET WELD: 0.5 x T
PARTIAL PEN EFFECTIVE THROAT: 0.7 x T

ARCHITECTURALLY EXPOSED STRUCTURAL STEEL (AESS):

THE CANOPY STRUCTURE IS DESIGNATED AS ARCHITECTURALLY EXPOSED STRUCTURAL STEEL (AESS), REFER TO S-603 AND THE SPECIFICATIONS FOR AESS DESIGNATION, NOTES AND REQUIREMENTS.

CANOPY - SPECIAL CONSTRUCTION NOTES

1. THE PLATFORM CANOPY, DOME CANOPY, AND FLYOVER BRIDGE ARE INTENDED TO BE FABRICATED AND ERECTED IN A WAY TO MAXIMIZE OFF-SITE ASSEMBLY / MINIMIZE ON-SITE ASSEMBLY AND TO MINIMIZE WORK REQUIRED TO BE PERFORMED ABOVE THE TRAIN SERVICE ENVELOPE
.
2. THE METHOD AND SEQUENCE OF CONSTRUCTION OF THE CANOPY STRUCTURE WILL BE INFLUENCED BY THE LOCATION OF CRANES AT THE SITE, AND THE STAGING AREA AVAILABLE. THE SEQUENCE OF CONSTRUCTION OUTLINED HEREIN (SEE S-610 FOR THE PLATFORM CANOPY AND S-620 FOR THE MAIN DOME CANOPY) DESCRIBES ONE POTENTIAL SEQUENCE. IN THIS SCENARIO, IT IS CONSIDERED THAT CRANES ARE LOCATED ON STATE STREET ONLY, BOTH TO THE NORTH AND SOUTH OF LAKE STREET.
3. THE CONTRACTOR SHALL DEVELOP THEIR OWN METHODS STATEMENT FOR FABRICATION, TRANSPORT, AND ERECTION OF THE CANOPY STRUCTURE, AND SHALL SUBMIT THIS METHODS STATEMENT TO THE ARCHITECT & COMMISSIONER FOR REVIEW.
4. ANY ATTACHMENT OF REQUIRED TEMPORARY SUPPORT FRAMES TO THE PLATFORM CANOPY STRUCTURE, SHALL BE REMOVED AND PAINT COATING SYSTEM APPLIED, SUCH THAT THE TEMPORARY ATTACHMENT LOCATIONS ARE NOT APPARENT IN THE PERMANENT CONDITION, AND SUCH THAT THE COATING SYSTEM IS FULLY ESTABLISHED. FIELD APPLIED PAINT SYSTEM 'TOUCH-UP' AT SUCH LOCATIONS SHALL BE INSPECTED AND APPROVED.
5. WHERE CLOSED BOX OR TUBE SECTIONS ARE SHOWN IN HORIZONTAL POSITION, PROVIDE MIN. 2x 1/2" DIA. WEEP HOLES AT THE BOTTOM SURFACE OF HORIZONTAL SECTIONS, OR AS NOTED ON THE DETAILS. WHERE CLOSED BOX SECTIONS ARE SHOWN IN VERTICAL (COLUMN) POSITION, PROVIDE MIN. 2x 1/2" DIA. WEEP HOLES AT THE BASE OF THE SECTION.
6. COORDINATE CANOPY CONSTRUCTION WITH CONSTRUCTION OF TRACK SUPPORT STRUCTURE AND PLATFORM FRAMING.
7. THE CONTRACTOR SHALL FURNISH ALL LABOR AND MATERIALS FOR SUCCESSFUL COMPLETION OF THIS PROJECT.
8. ALL FIELDWORK SHALL BE COORDINATED AND CONTINUOUSLY SUPERVISED BY THE CONTRACTOR.
9. REFER TO S-610 & S-620 FOR SPECIAL FABRICATION AND ERECTION NOTES RELATED TO THE PLATFORM CANOPY AND DOME CANOPY STRUCTURES, RESPECTIVELY.
10. REFER TO THE CANOPY SURVEY AND TOLERANCE NOTES, THIS SHEET, FOR REQUIREMENTS.

CANOPY STRUCTURE SURVEY AND TOLERANCE NOTES

GENERAL NOTES

1. THE PLATFORM CANOPY AND DOME CANOPY SHALL BE FABRICATED AND ERECTED TO ACHIEVE THE GEOMETRY DEFINED ON THE DRAWINGS. FOR THE PLATFORM CANOPY, REFER TO 1/S-611 (MAIN RIBS AND TRANSVERSE MEMBERS), 1/S-612 (SECONDARY RIBS) AND 2/S-612 (END RIBS). FOR THE DOME CANOPY REFER TO SHEETS S-621 AND S-623. THIS GEOMETRY AND COORDINATES REPRESENT THE CANOPY GEOMETRY IN ITS UNDEFLECTED SHAPE.
2. PROVIDED HEREIN ARE ACCEPTABLE LIMITS ON THE DEVIATION OF THE SPATIAL AS-BUILT COORDINATES FROM THE THEORETICAL COORDINATES, AND THE REQUIREMENTS FOR CONTINUOUS SURVEY PROGRAM TO VERIFY THESE AS-BUILT COORDINATES.
3. THE GEOMETRY AND SPATIAL COORDINATES OF THE PLATFORM AND CANOPY STRUCTURE ARE BASED UPON THEORETICAL REFERENCE ELEVATIONS, AS INDICATED ON THE DRAWINGS.
4. ESTABLISH A STATIONARY, UNDISTURBED ELEVATIONAL REFERENCE BENCHMARK, FOR ERECTION OF THE CANOPY STRUCTURE AND FOR THE CANOPY SURVEY PROGRAM.

PLATFORM CANOPY SURVEY / TOLERANCE NOTES

1. SURVEY THE PLATFORM FRAMING PRIOR TO FABRICATION AND ERECTION OF THE CANOPY, TO MAKE THE NECESSARY ADJUSTMENTS TO THE CANOPY STRUCTURE BASE RELATIVE TO THE THEORETICAL ELEVATION.
2. SURVEY THE RIBS ON SITE (PER NOTE 4 BELOW) IMMEDIATELY PRIOR TO WELDING SPLICES TO VERIFY THE GEOMETRY
3. SURVEY THE PLATFORM CANOPY ASSEMBLIES, AFTER ERECTION (PER NOTE 4 BELOW), WITH THE TEMPORARY JIG FRAME IN PLACE. THIS SURVEY SHALL BE COMPARED TO THE THEORETICAL SPATIAL COORDINATES ON THE DRAWINGS AND TO THE DIMENSIONAL TOLERANCES DEFINED HEREIN.
4. SURVEY AT LEAST FIVE (5) POINTS ALONG THE MAIN ARCHED RIBS (BASE POINTS, CROWN, AND TWO INTERMEDIATE POINTS).
5. THE SURVEYED POSITION (NORMAL TO THE CANOPY AND IN THE PLANE OF THE ARCH RIB PLATE) OF ANY POINT SHALL NOT DEVIATE FROM THE THEORETICAL POSITION BY MORE THAN ¼".
6. THE DEVIATION IN THE SURVEYED POSITION OF POINTS ON ADJACENT ARCH RIBS, AS DEFINED IN NOTE 5, SHALL NOT EXCEED 3/8"
7. THE SURVEYED POSITION OF ANY POINT PERPENDICULAR TO THE ARCH PLANE SHALL NOT DEVIATE FROM THE THEORETICAL HORIZONTAL POSITION BY MORE THAN ¾".
8. THE SURVEYED POSITION OF ANY POINT SHALL NOT DEVIATE FROM THE POSITION OF ADJACENT POINTS BY MORE THAN 1/4" MEASURED PERPENDICULAR TO THE ARCH PLANE.
9. SURVEY THE PLATFORM CANOPY ASSEMBLY AFTER FINAL ALIGNMENT AND REMOVAL OF THE JIG FRAMES. PROVIDE TO THE COMMISSIONER FOR INFORMATION.

DOME CANOPY SURVEY / TOLERANCE NOTES

THE FOLLOWING DOME CANOPY SURVEY & TOLERANCE NOTES APPLY TO BOTH THE OFF-SITE AND ON-SITE ERECTION OPERATIONS.

1. SURVEY THE SUPPORTING STRUCTURE PRIOR TO ERECTION OF THE CANOPY, TO MAKE THE NECESSARY ADJUSTMENTS TO THE FABRICATION OF THE CANOPY STRUCTURE UPON THE SUPPORTING STRUCTURE, TO ADJUST TO THE ACTUAL SUPPORTING STRUCTURE ELEVATION AND LOCATION RELATIVE TO THEORETICAL.
2. SURVEY OF THE DOME CANOPY STRUCTURE SHALL BE MADE IMMEDIATELY AFTER THE DOME CANOPY ASSEMBLIES ARE SET ONTO THE TEMPORARY SHORING (SEE DOME CANOPY FABRICATION & ERECTION NOTES) AND ALIGNED, IN ONE OF THE TWO FOLLOWING SEQUENCES, OR AN ALTERNATIVE SEQUENCE AS DEVELOPED BY THE CONTRACTOR.
   a. AS DOME CANOPY ASSEMBLIES ARE PLACED UPON THE SHORING PER THE SEQUENCE DESCRIBED IN THE FABRICATION AND ERECTION NOTES, SURVEY, ALIGN AND WELD ASSEMBLIES AS ASSEMBLY PLACEMENT PROGRESSES.
   b. AFTER ALL ASSEMBLIES ARE PLACED AND ALIGNED UPON THE TEMPORARY SHORING, FULLY SURVEY THE DOME CANOPY, ADJUST ALIGNMENT, AND WELD ALL ASSEMBLY SPLICES.

   IN ANY SEQUENCE, , DOME CANOPY ASSEMBLIES SHALL BE ERECTED TO THEIR THEORETICAL POSITION, WITH ADJUSTMENTS AS REQUIRED FOR MOVEMENTS DUE TO THERMAL EFFECTS, AND SHORING MOVEMENT.
3. SURVEY THE COMPLETE DOME CANOPY SUBSEQUENT TO COMPLETION OF ALL WELDED JOINTS.
4. SURVEY THE ASSEMBLY OF THE DOME CANOPY AT MULTIPLE POINTS DISTRIBUTED UNIFORMLY ACROSS EACH ASSEMBLY.
5. NODE AND SPLICE POINTS OF EACH DOME CANOPY ASSEMBLY SHALL BE SURVEYED JUST PRIOR TO THE FIELD WELDING. THE POSITION OF THE NODE AND SPLICE SHALL NOT DEVIATE FROM THEIR THEORETICAL POSITION BY MORE THAN ½".
6. THE RELATIVE POSITION OF ADJACENT NODES NORMAL TO THE DOME SURFACE SHALL NOT DEVIATE BY MORE THAN 1/8".

DESIGN BY:									
DRAWN BY:									
CHECKED BY:									
APPROVED BY:		4	7/3/2023	ISSUED FOR BID					
		0	9/9/2022	ISSUED FOR PERMIT	MC	MW	BY		
CDOT/APPROVED BY:		NO.	DATE	REVISIONS	DES.	DRW.	CHK.	DCCO	CDOT

TRANSYSTEMS
222 SOUTH RIVERSIDE PLAZA SUITE 610
CHICAGO, ILLINOIS 60606

SKIDMORE, OWINGS & MERRILL LLP
224 SOUTH MICHIGAN AVENUE, SUITE 1000
CHICAGO, ILLINOIS 60604

CHICAGO DEPARTMENT OF TRANSPORTATION
DIVISION OF ENGINEERING

STATE / LAKE LOOP ELEVATED STATION
200 NORTH STATE STREET, CHICAGO, IL 60601

CANOPY - STRUCTURAL SYSTEM DESCRIPTION AND CRITERIA

CDOT PROJECT D-1-209 | DATE: 9/9/2022

SPEC. NO.

DRAWING NO. S-600

REVISION NO.4

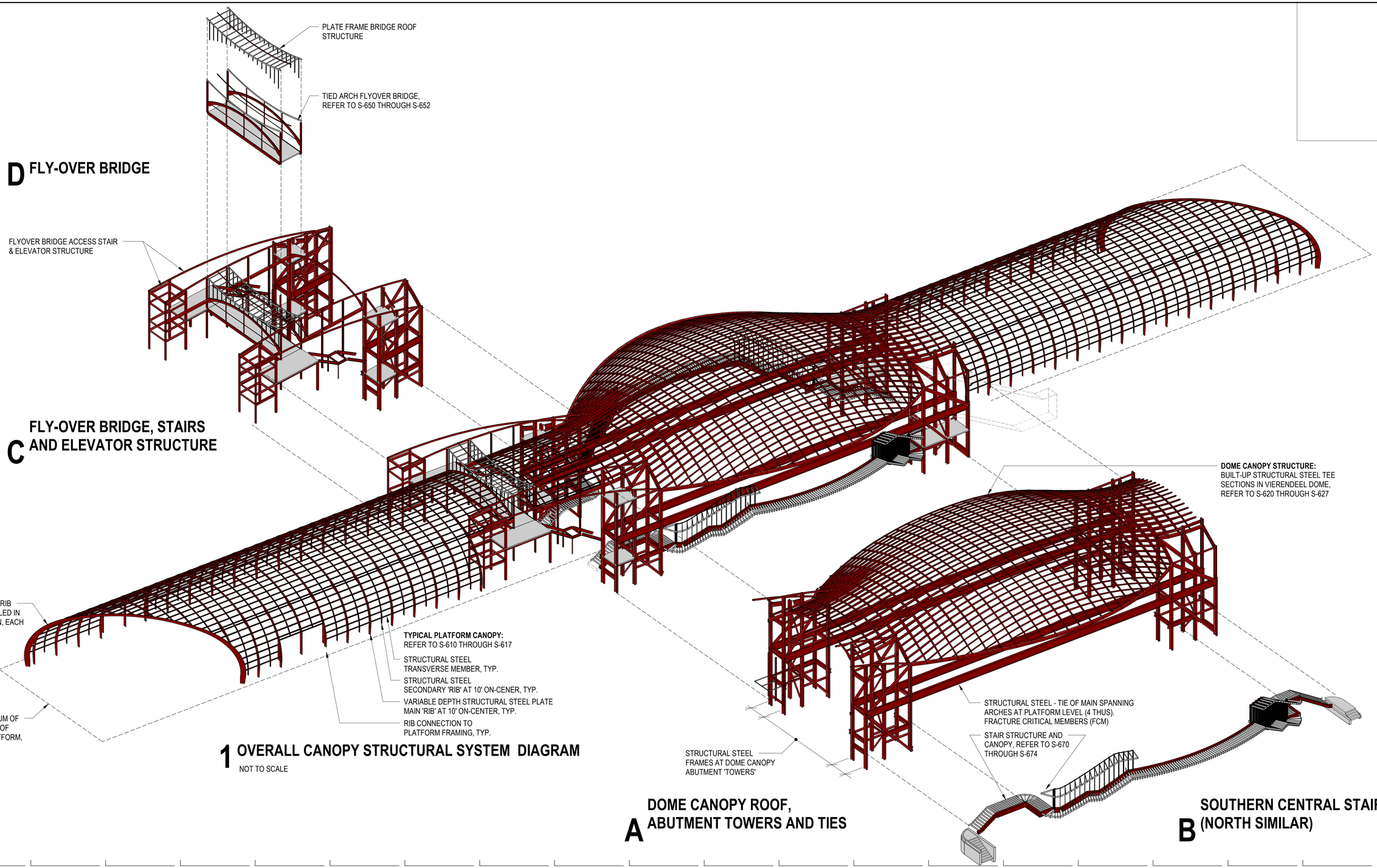

D FLY-OVER BRIDGE

C FLY-OVER BRIDGE, STAIRS AND ELEVATOR STRUCTURE

1 OVERALL CANOPY STRUCTURAL SYSTEM DIAGRAM
NOT TO SCALE

A DOME CANOPY ROOF, ABUTMENT TOWERS AND TIES

B SOUTHERN CENTRAL STAIR (NORTH SIMILAR)

NO.	DATE	REVISIONS	DES.	DRW.	CHK.	DCCO	CDOT
4	7/3/2023	ISSUED FOR BID					
0	9/9/2022	ISSUED FOR PERMIT	MC	MW	BY		

DESIGN BY:
DRAWN BY:
CHECKED BY:
APPROVED BY:
CDOT/APPROVED BY:

TRANSYSTEMS
222 SOUTH RIVERSIDE PLAZA SUITE 610
CHICAGO, ILLINOIS 60606

SKIDMORE, OWINGS & MERRILL LLP
224 SOUTH MICHIGAN AVENUE, SUITE 1000
CHICAGO, ILLINOIS 60604

CHICAGO DEPARTMENT OF TRANSPORTATION
DIVISION OF ENGINEERING

STATE / LAKE LOOP ELEVATED STATION
200 NORTH STATE STREET, CHICAGO, IL 60601

SPEC. NO.

CANOPY - STRUCTURAL SYSTEM DIAGRAMS

DRAWING NO. S-601

CDOT PROJECT D-1-209

DATE: 9/9/2022

REVISION NO. 4

DESIGN LOADS

DEAD LOADS

PERMANENT STATION CONSTRUCTION INCLUDING STRUCTURAL SELF-WEIGHT

SUPERIMPOSED DEAD LOADS

DOME CANOPY GLAZING AND ATTACHMENT - 12PSF
PLATFORM CANOPY GLAZING AND ATTACHMENT - 9 PSF

LIGHT TRAY - (4) 1000 LBF @ 20' C/C
SUSPENDED CLOCK - 5000 LBF @ CENTER OF DOME
LIVE LOADS

STAIR, PLATFORM, FLYOVER BRIDGE LIVE LOAD: 100 PSF (NON-REDUCIBLE)
ROOF LIVE LOAD: 30 PSF (REDUCIBLE, SEE DIAGRAMS)

FALL ARREST LOADING

5,000 lb. (INCLUDING FS=2) ACTING TANGENT TO PLANE OF PLATFORM CANOPY AND DOME CANOPY

WIND LOADS & PARAMETERS

REFER TO WIND TUNNEL TESTING REPORT FOR STRUCTURAL DESIGN WIND LOADS:

RWDI REPORT # 2100248
STATE & LAKE ELEVATED STATION
WIND-INDUCED STRUCTURAL RESPONSES
DATED 12/9/2021

RISK CATEGORY: III
EXPOSURE CATEGORY: B
DESIGN WIND SPEED:
114 MPH (1,700 YEAR MRI, 3 SECOND GUST, EXP. C)
85 MPH (50 YEAR MRI, 3 SECOND GUST, EXP. C)

SNOW LOADS & PARAMETERS

ASCE7-2016
RISK CATEGORY: III
SNOW IMPORTANCE FACTOR: 1.1
SITE ELEVATION: +600' (+/-)
GROUND SNOW LOAD 'PG': 25 PSF

REFER TO SNOW LOAD DIAGRAMS FOR THE PLATFORM CANOPY AND MAIN STATION CANOPY

SEISMIC DESIGN PARAMETERS

RISK CATEGORY: III
SPECTRAL RESPONSE ACCELERATIONS:
S_S = 0.125g
S_1 = 0.066g
SITE CLASS = E
(Ss, S1, & SITE CLASS FROM CHICAGO BUILDING CODE)
SITE ADJUSTED SPECTRAL RESPONSE ACCELERATIONS:
S_{MS} = 0.300g (Fa = 2.4)
S_{M1} = 0.277g (Fv = 4.2)
DESIGN SPECTRAL RESPONSE ACCELERATIONS:
S_{DS} = 0.200g
S_{D1} = 0.185g
SEISMIC DESIGN CATEGORY = C

RESPONSE MODIFICATION FACTOR R = 3
OVERSTRENGTH FACTOR OMEGA = 3
DEFLECTION AMPLIFICATION FACTOR C_D = 3
SEISMIC IMPORTANCE FACTOR I_E = 1.25

INERTIAL LOADS (IDCM)

10 FT/S^2 ACCELERATION AT BASE OF CANOPY (PLATFORM)

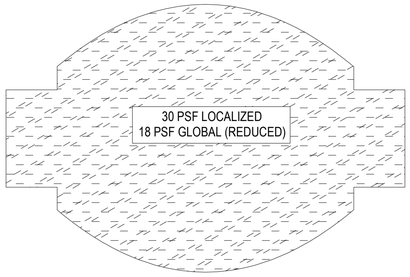

CASE 1A: UNIFORM LOAD

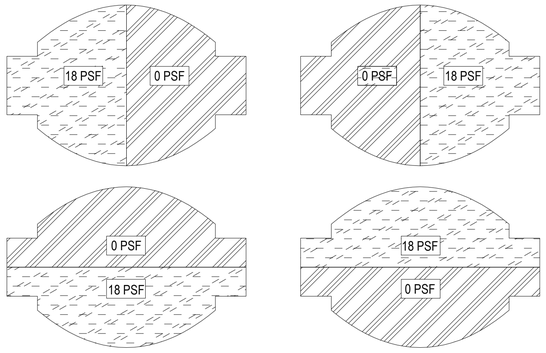

CASE 1B: UNBALANCED LOADS

1 LIVE LOAD CASES - DOME CANOPY
NOT TO SCALE

30 PSF LOCALIZED / 18 PSF GLOBAL (REDUCED)
(UNIFORM VERTICAL LOAD PROJECTION ONTO CANOPY)

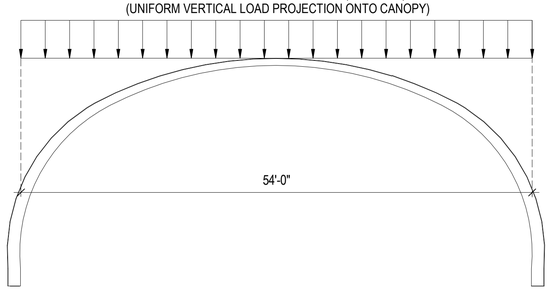

CASE 2A: UNIFORM LOAD

18 PSF GLOBAL (REDUCED)
(VERTICAL LOAD PROJECTION ONTO CANOPY)

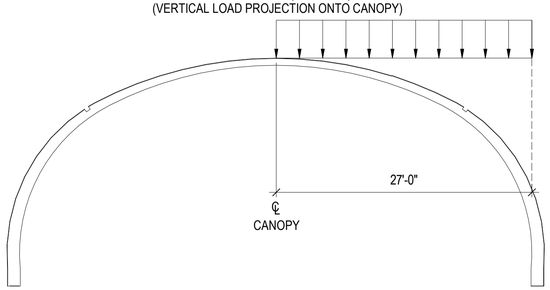

CASE 2B: UNBALANCED LOADS

NOTE:
1. THE MIRRORED LIVE LOAD SHALL ALSO BE CONSIDERED

2 LIVE LOAD CASES - PLATFORM CANOPY
NOT TO SCALE

DESIGN BY:										
DRAWN BY:										
CHECKED BY:										
APPROVED BY:		4	7/3/2023	ISSUED FOR BID						
CDOT/APPROVED BY:		0	9/9/2022	ISSUED FOR PERMIT	MC	MW	BY			
		NO.	DATE	REVISIONS	DES.	DRW.	CHK.	DCCO	CDOT	

TRANSYSTEMS
222 SOUTH RIVERSIDE PLAZA SUITE 610
CHICAGO, ILLINOIS 60606

SKIDMORE, OWINGS & MERRILL LLP
224 SOUTH MICHIGAN AVENUE, SUITE 1000
CHICAGO, ILLINOIS 60604

CHICAGO DEPARTMENT OF TRANSPORTATION
DIVISION OF ENGINEERING

STATE / LAKE LOOP ELEVATED STATION
200 NORTH STATE STREET, CHICAGO, IL 60601

CANOPY LOADING CRITERIA

CDOT PROJECT D-1-209

DATE: 9/9/2022

SPEC. NO.

DRAWING NO. S-602A

REVISION NO. 4

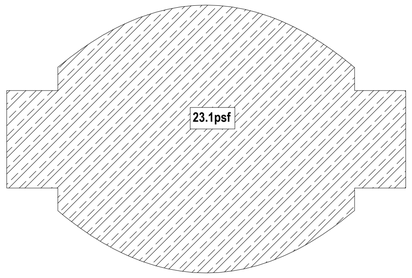

CASE 1A: UNIFORM LOAD

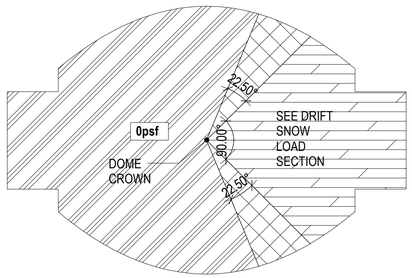

CASE 1B: UNBALANCED LOAD (0°)

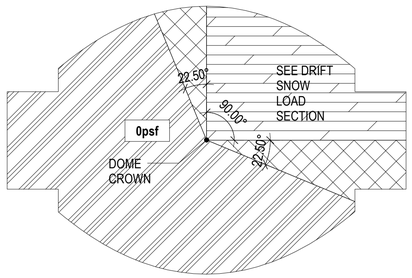

CASE 1C: UNBALANCED LOAD (45°)

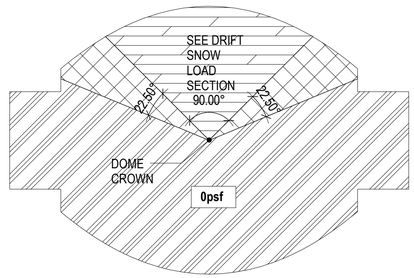

CASE 1D: DRIFT LOAD (90°)

1 SNOW LOAD CASES - DOME CANOPY
NOT TO SCALE

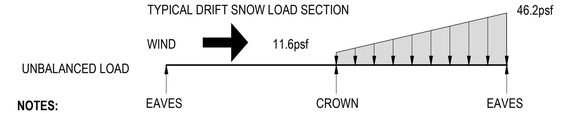

NOTES:

1. SNOW LOADS ARE DERIVED BASED ON ASCE7-2016 SNOW LOAD PROVISIONS
2. THE UNBALANCED SNOW LOAD PROFILE SHALL BE APPLIED TO THE DOWNWIND 90° SECTOR IN PLAN VIEW. AT BOTH EDGES OF THIS SECTOR, THE LOAD SHALL DECREASE LINEARLY TO ZERO OVER SECTORS OF 22.5° EACH. THERE SHALL BE NO SNOW LOAD ON THE REMAINING 225° UPWIND SECTOR.
3. SNOW LOAD PLANS ARE SHOWN FOR 0°, 45° AND 90°. OTHER WIND DIRECTIONS SHALL BE CONSIDERED WHICH REPRESENT MIRRORED CONDITIONS TO THOSE SHOWN ABOVE

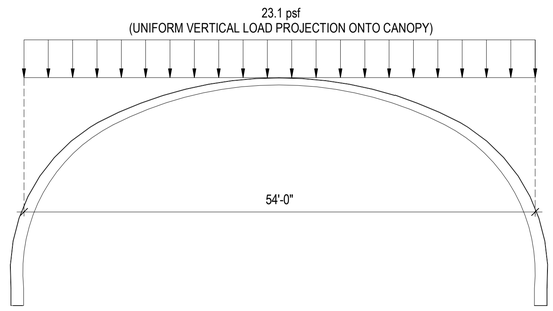

CASE 2A: UNIFORM LOAD

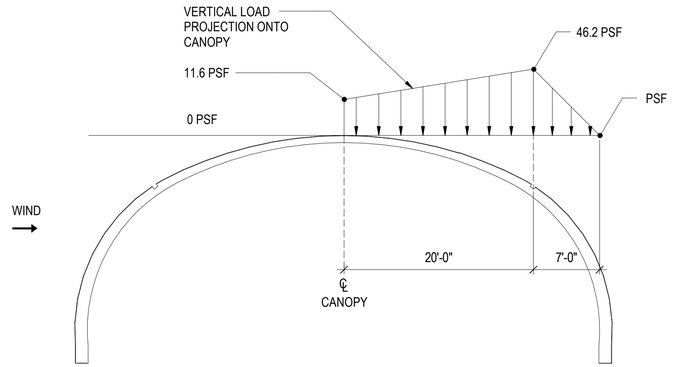

CASE 2B: UNBALANCED LOAD

NOTE:
1. THE MIRRORED DRIFT SNOW LOAD, FOR WIND IN THE OPPOSITE DIRECTION, SHALL ALSO BE CONSIDERED

2 SNOW LOAD CASES - PLATFORM CANOPY
NOT TO SCALE

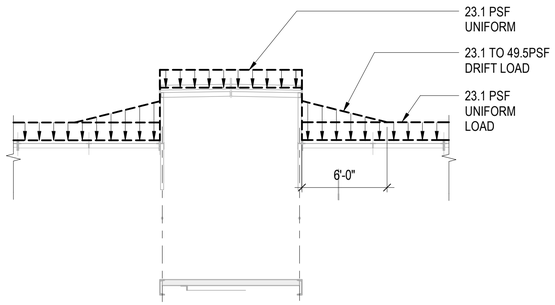

3A SECTION

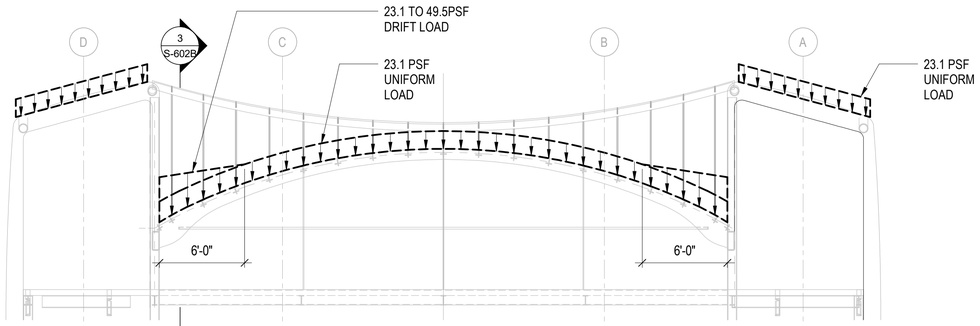

3B SECTION

3 DRIFT SNOW LOAD AT FLYOVER BRIDGE
3/16" = 1'-0"

DESIGN BY:										
DRAWN BY:										
CHECKED BY:										
APPROVED BY:		4	7/3/2023	ISSUED FOR BID						
CDOT/APPROVED BY:		0	9/9/2022	ISSUED FOR PERMIT	MC	MW	BY			
		NO.	DATE	REVISIONS	DES.	DRW.	CHK.	DCCO	CDOT	

TranSystems
TRANSYSTEMS
222 SOUTH RIVERSIDE PLAZA SUITE 610
CHICAGO, ILLINOIS 60606

SOM
SKIDMORE, OWINGS & MERRILL LLP
224 SOUTH MICHIGAN AVENUE, SUITE 1000
CHICAGO, ILLINOIS 60604

CDOT
CHICAGO DEPARTMENT OF TRANSPORTATION
DIVISION OF ENGINEERING

STATE / LAKE LOOP ELEVATED STATION
200 NORTH STATE STREET, CHICAGO, IL 60601

CANOPY LOADING DIAGRAMS

CDOT PROJECT D-1-209

DATE: 9/9/2022

SPEC. NO.

DRAWING NO.
S-602B

REVISION NO.4

SPECIAL STRUCTURAL STEEL NOTES – CANOPIES

A. STEELWORK COATINGS - GENERAL

1. CONDUCT A PRECONSTRUCTION CONFERENCE AT LEAST 35 DAYS PRIOR TO FABRICATION TO CONFIRM MATERIALS AND PROCEDURES. CONFERENCE SHALL BE ATTENDED BY REPRESENTATIVES OF THE PAINT MANUFACTURER, CONTRACTOR, FABRICATOR, OWNER'S TESTING LABORATORY, COMMISSIONER AND ARCHITECT.
2. PRIMING AND PAINTING OF THE STRUCTURAL STEEL WILL BE REQUIRED EXCEPT WHERE SPECIFICALLY DESIGNATED OTHERWISE.
3. STEEL THAT WILL RECEIVE PAINT OR CORROSION PROTECTION COATINGS SHALL BE BLAST CLEANED.
4. STEEL NOT EXPOSED TO VIEW, AND FIREPROOFED, SHALL BE SHOP COATED WITH A ZINC-RICH METAL PRIMER COMPATIBLE WITH THE FIREPROOFING.
5. BOLTS INSTALLED IN PAINTED STEEL SHALL HAVE A ZINC/ALUMINUM COATING IN ACCORDANCE WITH ASTM F1136 GRADE 3. AFTER INSTALLATION, CLEAN BOLTS AND CONNECTION AREA AND COAT WITH THE SAME SYSTEM AS THE ADJACENT STEEL WORK.

B. STEELWORK COATINGS - AESS

1. ALL STEEL ASSOCIATED WITH THE CANOPY STRUCTURE IS CONSIDERED TO BE EXTERIOR EXPOSED STEEL, AND IS DESIGNATED AS ARCHITECTURALLY EXPOSED STRUCTURAL STEEL.
2. STEELWORK DESIGNATED AS ARCHITECTURALLY EXPOSED STRUCTURAL STEEL (AESS – SEE AESS DESIGNATION DIAGRAM, THIS SHEET) SHALL BE CLEANED AND PRIMED PER THE AESS SPECIFICATIONS 05 12 50.
3. STEELWORK DESIGNATED AS AESS SHALL HAVE A MULTICOAT PAINT SYSTEM CONSISTING OF AN INORGANIC ZINC-RICH METAL PRIMER, A SHOP APPLIED FINISH COAT AND A FIELD APPLIED FINISH COAT, TO MEET THE COLOR AND FINISH REQUIREMENTS OF THE ARCHITECT. REFER TO SPECIFICATION 05 12 50 FOR AESS FOR ALL CLEANING, PRIMING, AND PAINTING REQUIREMENTS FOR THE STEEL CANOPY STRUCTURE. REFER TO SPECIFICATION 09 90 00 FOR PAINT COLOR.
4. AESS STEELWORK SHALL BE FABRICATED, ERECTED, AND COATED PER THE REQUIREMENTS OF THE AISC CODE OF STANDARD PRACTICE FOR THE DEFINED AESS CATEGORY, AND PER THE MOCKUP AS APPROVED BY THE ARCHITECT WHERE REQUIRED. REFER TO THE ARCHITECTURAL DRAWINGS FOR DEFINITION OF REQUIRED MOCKUP ASSEMBLIES. SEE SPECIFICATION 05 12 50 FOR FABRICATION, COATING, AND ERECTION REQUIREMENTS, AS WELL AS MOCKUP REQUIREMENTS, OF THE CANOPY ARCHITECTURALLY EXPOSED STRUCTURAL STEEL.
5. FIELD APPLIED PAINT SYSTEM 'TOUCH-UPS' ARE REQUIRED AT LOCATIONS OF FIELD SPLICES OF STRUCTURAL MEMBERS, AT LOCATIONS OF TEMPORARY ERECTION TABS/BRACKETS THAT ARE TO BE REMOVED, AND AT ANY OTHER LOCATIONS IN WHICH THE SHOP APPLIED PAINT SYSTEM IS IN ANY WAY ABRADED OR DAMAGED. REFER TO AESS SPECIFICATION 05 12 50 FOR FIELD TOUCH-UP REQUIREMENTS.
6. A COMPLETE FIELD FINISH COAT SHALL BE APPLIED AS PER THE SPECIFICATIONS FOR AESS - 051250
7. REFER TO SPECIFICATION 08 43 33 FOR REQUIREMENTS FOR THE CANOPY SLOPED GLAZING ASSEMBLIES

C. ARCHITECTURALLY EXPOSED STRUCTURAL STEEL (AESS)

1. ALL STRUCTURAL STEEL ABOVE PLATFORM LEVEL AND VISIBLE SHALL BE ARCHITECTURALLY EXPOSED STRUCTURAL STEEL (AESS), UNLESS SPECIFICALLY NOTED OTHERWISE.
2. STEEL INDICATED AS AESS SHALL BE FABRICATED AND ERECTED IN ACCORDANCE WITH AISC CODE OF STANDARD PRACTICE AND SPECIFICATION SECTION 05 12 50. THE FOLLOWING STEEL IS AESS UNLESS NOTED OTHERWISE.

a.	PLATFORM CANOPY	CATEGORY 3
b.	DOME CANOPY:	CATEGORY 3
c.	FLY-OVER BRIDGE STEEL:	CATEGORY 3
d.	HISTORIC CANOPY:	SEE S-680
e.	OTHER AREAS:	REFER TO DETAIL DIAGRAMS 1 THROUGH 4

REFER TO THE AESS DESIGNATION DIAGRAM, THIS SHEET, FOR IDENTIFICATION OF STEEL ELEMENTS AND ASSOCIATED AESS CATEGORIES.

3. THE CANOPY STEEL FABRICATOR SHALL BE AN AISC CERTIFIED FABRICATOR. THE CANOPY STEEL FABRICATOR'S QUALITY CONTROL PROGRAM SHALL ADDRESS THE AESS REQUIREMENTS OF THE PROJECT PER AISC CODE OF STANDARD PRACTICE CHAPTER 10 AND THE PROJECT CONTRACT DOCUMENTS.
4. AESS SHALL BE FABRICATED AND ERECTED TO THE QUALITY OF THE APPROVED MOCKUP. PROVIDE MOCKUPS FOR THE FOLLOWING COMPONENTS WHICH INCLUDE STRUCTURAL STEEL:

MOCKUP #1: DOME CANOPY ASSEMBLAGE AND CONNECTIONS TO ADJACENT ASSEMBLAGE (SEE A-142)
MOCKUP #2: PLATFORM CANOPY ASSEMBLAGE AND CONNECTIONS TO ADJACENT ASSEMBLAGE (SEE A-141)
MOCKUP #3: ABUTMENT CLADDING (SEE A-211)
MOCKUP #4: SEGMENT OF FEATURE STAIR (SEE A-412 & A-418.)
MOCKUP #5: FLY-OVER BRIDGE ARCH SECTION & HANGER CONNECTION (SEE S-650)
MOCKUP #6: FLY-OVER BRIDGE ARCH / TIE CONNECTION (SEE S-650)

REFER TO THE MOCKUP ASSEMBLAGE DIAGRAMS ON THE DRAWINGS FOR DEFINITION OF THE SCOPE AND EXTENT OF MOCKUPS. WHICH INCLUDE THE STEEL CANOPY STRUCTURE AS WELL AS THE SUPPORTED GLAZING ASSEMBLIES. MOCKUPS SHALL NOT BE CONSIDERED TO BE INCORPORATED INTO THE PERMANENT STRUCTURE ON SITE. ARCHITECTURAL DRAWINGS MAY SPECIFY ADDITIONAL MOCKUPS FOR ARCHITECTURAL COMPONENTS.

5. ALL CANOPY STEEL DIRECTLY SUPPORTS ARCHITECTURAL GLAZING. THE CONTRACTOR SHALL COORDINATE THE FABRICATION AND ERECTION OF THE CANOPY STEEL WITH THE ARCHITECTURAL GLAZING SYSTEMS WHICH IT SUPPORTS.

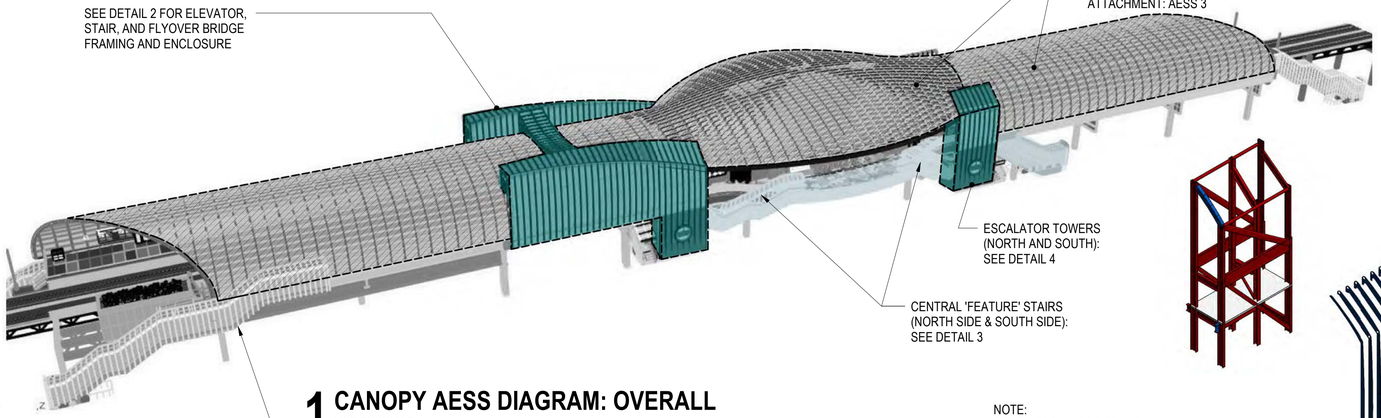

1 CANOPY AESS DIAGRAM: OVERALL
NOT TO SCALE

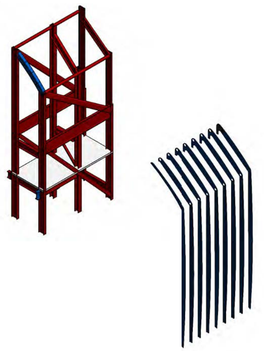

- STRUCTURAL STEEL PLATE MULLIONS AT ENCLOSURE: AESS 3 TYP.
- DOME CANOPY WALER MEMBER AND SELECT MEMBERS AS SHOWN: AESS 3
- STRUCTURAL STEEL BEAM, COLUMN, BRACES AT ESCALATOR TOWER FRAME: AESS 1 TYP. UNO

NOTE:
SOUTH ESCALATOR FRAME SHOWN, NORTH SIMILAR

4 AESS DIAGRAM: ESCALATOR TOWER FRAME & ENCLOSURE
NOT TO SCALE

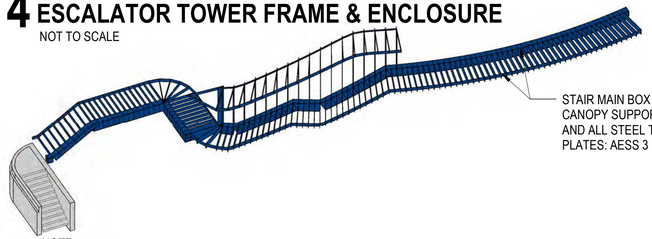

NOTE:
WESTERN HALF OF SOUTHERN CENTRAL STAIR SHOWN HERE. EASTERN HALF OF SOUTHERN STAIR, AND NORTHERN STAIR ARE SIMILAR

AESS DIAGRAM: NORTH AND SOUTH 'FEATURE' STAIRS (CENTRAL STAIR)
3 NOT TO SCALE

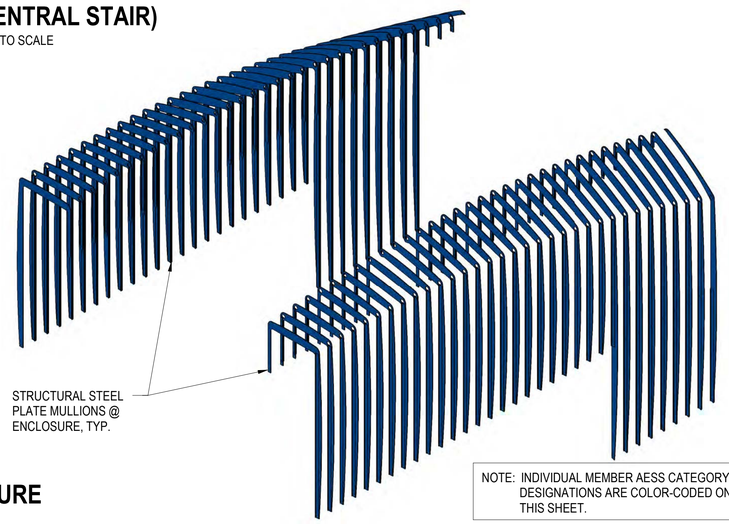

NOTE: INDIVIDUAL MEMBER AESS CATEGORY DESIGNATIONS ARE COLOR-CODED ON THIS SHEET.

BRIDGE:
- ARCHES, TIES, HANGERS, FLOOR FRAMING EDGE CHANNEL, ROOF PLATE FRAMES: AESS 3
- FLOOR FRAMING NOT EXPOSED TO VIEW (UNDER-SLAB BEAMS AND BRACING): CONVENTIONAL STEELWORK (NON-AESS)

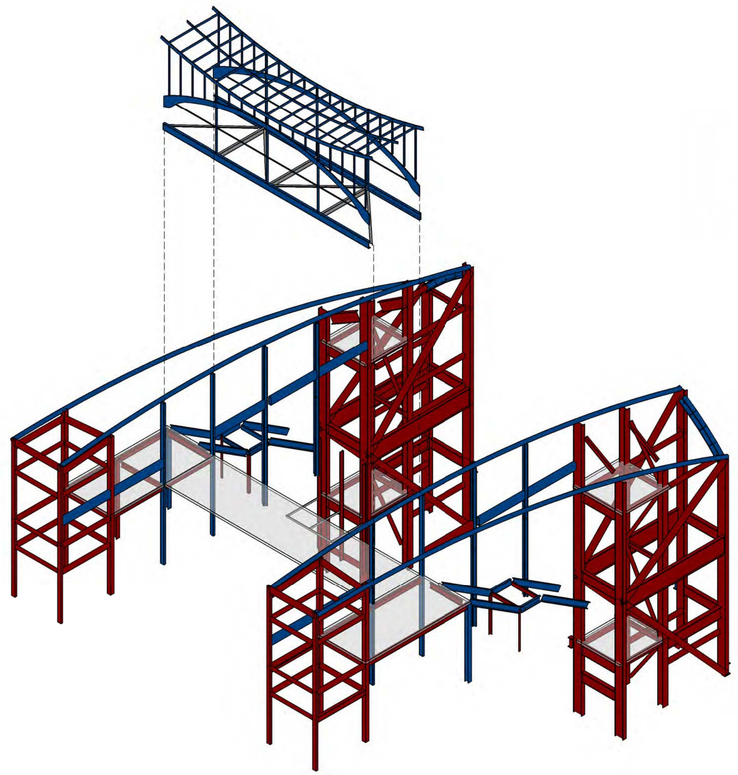

- ROOF EDGE MEMBERS, SELECTED COLUMNS AND CANOPY WALERS: AESS 3
- STAIR POST AND MAIN STRINGERS: AESS 3
- STRUCTURAL STEEL PLATE MULLIONS AT ENCLOSURE: AESS 3 TYP.
- TYPICAL STEEL MEMBERS UNLESS NOTED OTHERWISE: AESS 1

2 AESS DIAGRAM: STAIR / ELEVATOR / BRIDGE FRAME & ENCLOSURE
NOT TO SCALE

DESIGN BY:										
DRAWN BY:										
CHECKED BY:										
APPROVED BY:		4	7/3/2023	ISSUED FOR BID						
CDOT/APPROVED BY:		0	9/9/2022	ISSUED FOR PERMIT	MC	MW	BY			
		NO.	DATE	REVISIONS	DES.	DRW.	CHK.	DCCO	CDOT	

TRANSYSTEMS
222 SOUTH RIVERSIDE PLAZA SUITE 610
CHICAGO, ILLINOIS 60606

SKIDMORE, OWINGS & MERRILL LLP
224 SOUTH MICHIGAN AVENUE, SUITE 1000
CHICAGO, ILLINOIS 60604

CHICAGO DEPARTMENT OF TRANSPORTATION
DIVISION OF ENGINEERING

STATE / LAKE LOOP ELEVATED STATION
200 NORTH STATE STREET, CHICAGO, IL 60601

SPEC. NO.

CANOPY NOTES AND DETAILS

DRAWING NO. S-603

CDOT PROJECT D-1-209 | DATE: 9/9/2022 | REVISION NO.4

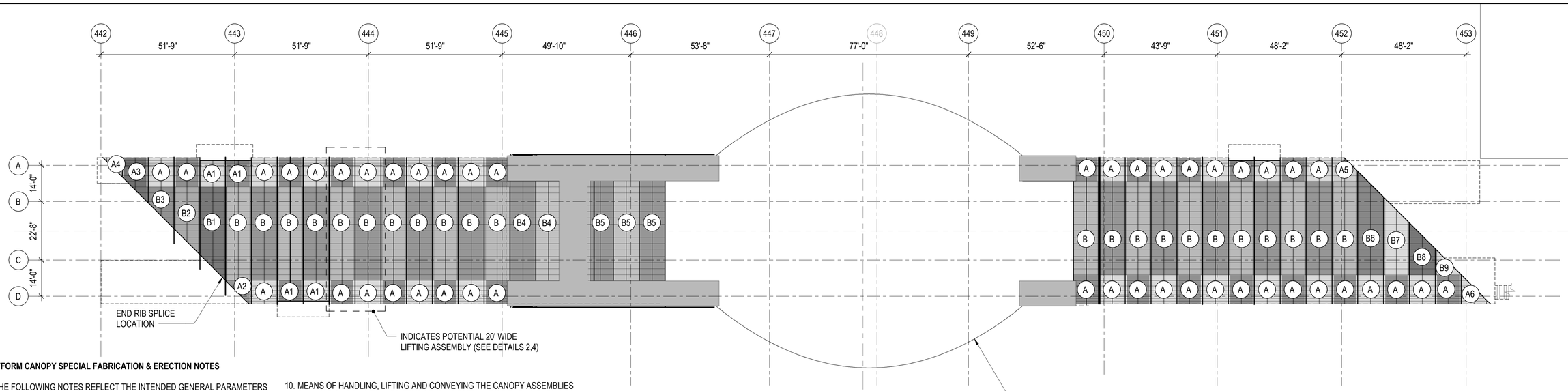

1 PLATFORM CANOPY PREFABRICATED CANOPY ASSEMBLY LAYOUT PLAN

1" = 20'-0"

PLATFORM CANOPY SPECIAL FABRICATION & ERECTION NOTES

1. THE FOLLOWING NOTES REFLECT THE INTENDED GENERAL PARAMETERS FOR THE FABRICATION AND ERECTION OF THE TYPICAL PLATFORM CANOPY STRUCTURE. THE CONTRACTOR SHALL DEVELOP A COMPLETE FABRICATION, TRANSPORTATION AND ERECTION METHODS STATEMENT, FOR REVIEW BY THE ARCHITECT, ENGINEER AND COMMISSIONER, PRIOR TO FABRICATION. THE CONTRACTOR'S METHODS STATEMENT SHALL ADDRESS THE INTENDED MEANS FOR FABRICATION OF THE INDIVIDUAL MEMBERS AND NODES, INCLUDING FIT-UP, TO THE PRESCRIBED TOLERANCES. IT SHALL ALSO INCLUDE MEANS OF MAINTAINING GEOMETRY AND INTEGRITY OF ASSEMBLIES DURING TRANSPORTATION AND HANDLING, AND THE MEANS OF ERECTION INCLUDING TEMPORARY SUPPORT AND SEQUENCE OF REMOVAL OF TEMPORARY SUPPORT. THE CONTRACTOR'S MEANS OF ERECTION IS SUBJECT TO THE TRACK ACCESS PERIOD (SEE G-004) AND IN THE SPECIFICATIONS. THE CONTRACTOR SHALL DEVELOP A DETAILED SURVEYING PLAN FOR MONITORING THE POSITION OF THE STRUCTURE AT EACH STAGE OF CONSTRUCTION (SEE SURVEY AND TOLERANCE NOTES ON S-600).
2. THE PLATFORM CANOPY IS ENVISIONED TO BE CONSTRUCTED IN A MODULAR FASHION IN WHICH SUBASSEMBLIES ARE SHOP FABRICATED, TRANSPORTED TO SITE, SPLICED ON SITE, AND LIFTED INTO PLACE IN LARGER UNITS.
3. THE LAYOUT OF PREFABRICATED ASSEMBLIES AND SPLICE LOCATIONS INDICATED IS CONSISTENT WITH THE STRUCTURAL ENGINEERING DESIGN FOR THE CANOPY STRUCTURE IN THE PERMANENT CONDITION.
4. SHOP FABRICATED SUBASSEMBLY TYPES SHOWN IN DETAIL 3 REPRESENT ENVISIONED PRE-ASSEMBLED PIECES BASED ON ASSUMED TRANSPORTATION SIZE LIMITATIONS.
5. THE DIAGRAMS IN DETAIL 4 ILLUSTRATE A SCENARIO IN WHICH A 20' WIDE 'STRIP' OF PLATFORM CANOPY STRUCTURE IS FULLY ASSEMBLED AT AN ON-SITE STAGING AREA FROM THE SMALLER TRANSPORTATION-SIZED ASSEMBLIES (DETAIL 3), AND IS THEN LIFTED INTO PLACE ON THE PLATFORM DECK.
6. THE LARGER ASSEMBLY, ONCE LIFTED UP TO PLATFORM LEVEL, WOULD BE CONVEYED TO THE EAST OR WEST ALONG THE PLATFORM, VIA SKIDDING SYSTEM, GANTRY, OR OTHER MEANS, TO THEIR FINAL LOCATION, WHERE THEY WOULD BE AFFIXED TO THE SUPPORTING PLATFORM STRUCTURE. THE CONSTRUCTION IS THUS ENVISIONED TO START FROM THE FAR WEST AND EAST ENDS, AND MOVE IN TOWARDS THE MAIN STATION AT STATE STREET.
7. THE CONTRACTOR MAY PROPOSE ALTERNATIVE MODULARIZATIONS AND SEQUENCES BASED UPON THEIR PROPOSED METHOD OF CONSTRUCTION. ANY ALTERNATIVE PROPOSAL SHALL BE REVIEWED BY THE COMMISSIONER PRIOR TO FABRICATION, AND IS SUBJECT TO THE TRACK ACCESS PERIOD LISTED IN THE SPECIFICATIONS AND PHASING SCHEDULE.
8. REFER TO THE CANOPY STRUCTURAL STEEL DETAIL SHEETS FOR ASSEMBLY CONNECTION DETAILS INCLUDING ASSEMBLY SPLICE DETAILS.
9. THE ARCH RIB ESSEMBLIES ARE NOT SELF SUPPORTING UNTIL PERMANENTLY FIXED TO THE PLATFORM STRUCTURE.
10. MEANS OF HANDLING, LIFTING AND CONVEYING THE CANOPY ASSEMBLIES SHALL PROVIDE ADEQUATE TEMPORARY RESTRAINT OF THE ARCHED RIB BASES TO MAINTAIN THE GEOMETRY OF THE ASSEMBLIES PRIOR TO AFFIXING TO THEIR PERMANENT LOCATION.
11. PROVIDE TEMPORARY LIFTING FRAMES / JIGS AS REQUIRED BASED ON THE CONTRACTOR'S FINAL ERECTION AND LIFTING METHOD.
12. GLAZING IS INTENDED TO BE INSTALLED UPON THE CANOPY STRUCTURE AFTER THE STRUCTURE IS AFFIXED TO THE PLATFORM FRAMING AND ANY TEMPORARY ERECTION FRAMES/JIGS ARE REMOVED.
13. REFER TO SHEET S-600 FOR CANOPY SPECIAL CONSTRUCTION NOTES.

PLATFORM CANOPY PREFABRICATED ASSEMBLY KEY

- (A) INDICATES TYPICAL PLATFORM CANOPY SIDE ASSEMBLY
- (AX) INDICATES ATYPICAL PLATFORM CANOPY SIDE ASSEMBLY
- (B) INDICATES TYPICAL PLATFORM CANOPY CROWN ASSEMBLY
- (BX) INDICATES ATYPICAL PLATFORM CANOPY CROWN ASSEMBLY

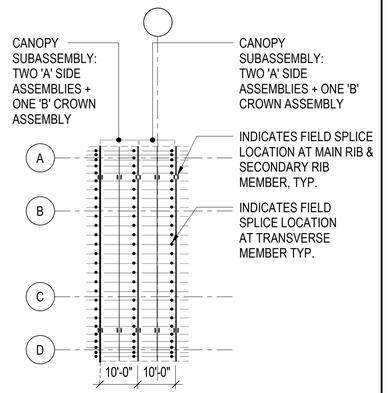

2 TYP. SUBASSEMBLY SPLICE DIAGRAM (PLAN)

1" = 20'-0"

NOTE: TEMPORARY JIG/FRAME (NOT SHOWN) AS REQUIRED - BY CONTRACTOR

SUBASSEMBLY TYPE A (SIDE)

SUBASSEMBLY TYPE B (CROWN)

3 SHOP FABRICATED SUBASSEMBLY TYPES

NOT TO SCALE

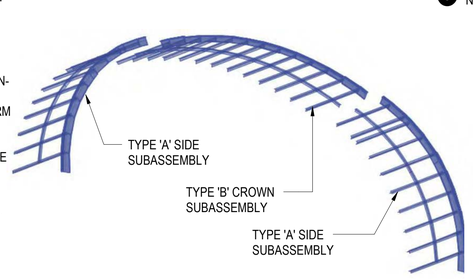

TYPE 'A' SIDE ASSEMBLIES AND TYPE 'B' CROWN ASSEMBLY CONNECTED ON SITE AT GROUND STAGING AREA

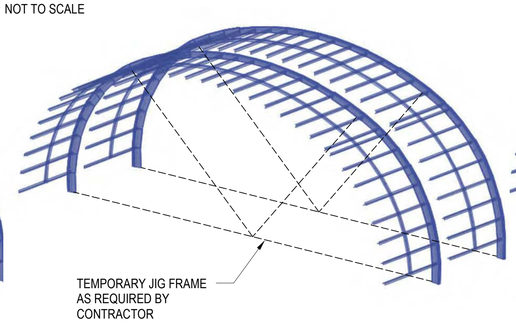

PAIR OF 10' WIDE CANOPY ASSEMBLIES ALIGNED FOR SITE CONNECTION AT GROUND STAGING AREA

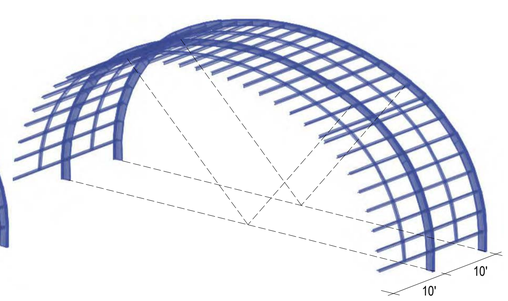

20' WIDE CANOPY SECTION FULLY ASSEMBLED - READY FOR LIFTING INTO PLACE ON PLATFORM DECK

4 POTENTIAL LIFTING ASSEMBLY SEQUENCE

NOT TO SCALE

NO.	DATE	REVISIONS	DES.	DRW.	CHK.	DCCO	CDOT
4	7/3/2023	ISSUED FOR BID					
0	9/9/2022	ISSUED FOR PERMIT	MC	MW	BY		

DESIGN BY:
DRAWN BY:
CHECKED BY:
APPROVED BY:
CDOT/APPROVED BY:

TranSystems
TRANSYSTEMS
222 SOUTH RIVERSIDE PLAZA SUITE 610
CHICAGO, ILLINOIS 60606

SOM
SKIDMORE, OWINGS & MERRILL LLP
224 SOUTH MICHIGAN AVENUE, SUITE 1000
CHICAGO, ILLINOIS 60604

CDOT
CHICAGO DEPARTMENT OF TRANSPORTATION
DIVISION OF ENGINEERING

STATE / LAKE LOOP ELEVATED STATION
200 NORTH STATE STREET, CHICAGO, IL 60601

PLATFORM CANOPY PREFABRICATED ASSEMBLY LAYOUT

CDOT PROJECT D-1-209 | DATE: 9/9/2022

SPEC. NO.

DRAWING NO. S-610

REVISION NO.4

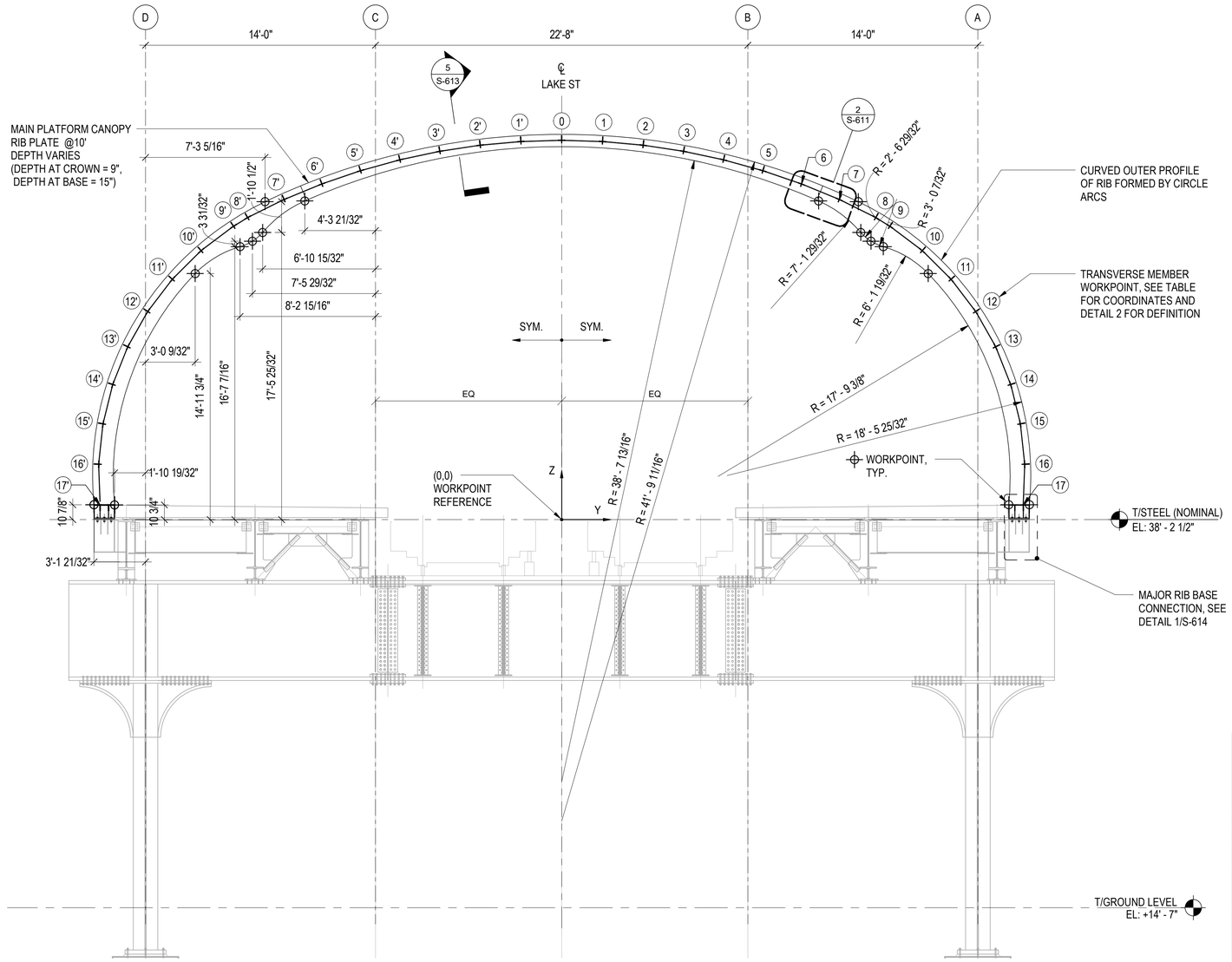

1 SECTION ON MAIN RIB
1/4" = 1'-0"

NOTES:

1. THE ABOVE GEOMETRY IS SYMMETRICAL ABOUT THE PROJECT CENTERLINE.
2. THE RIB GEOMETRY IS DEFINED BY A CHAIN OF TANGENT CIRCLE ARCS WITH THE WORKPOINTS SHOWN AS ⌖ AND RADII NOTED
3. FOR CLARITY THE LOCATIONS OF THE WORKPOINTS ARE NOTED ON THE LHS OF THE DIAGRAM ONLY. CIRCLE ARC RADII ARE NOTED ON THE RHS OF THE DIAGRAM

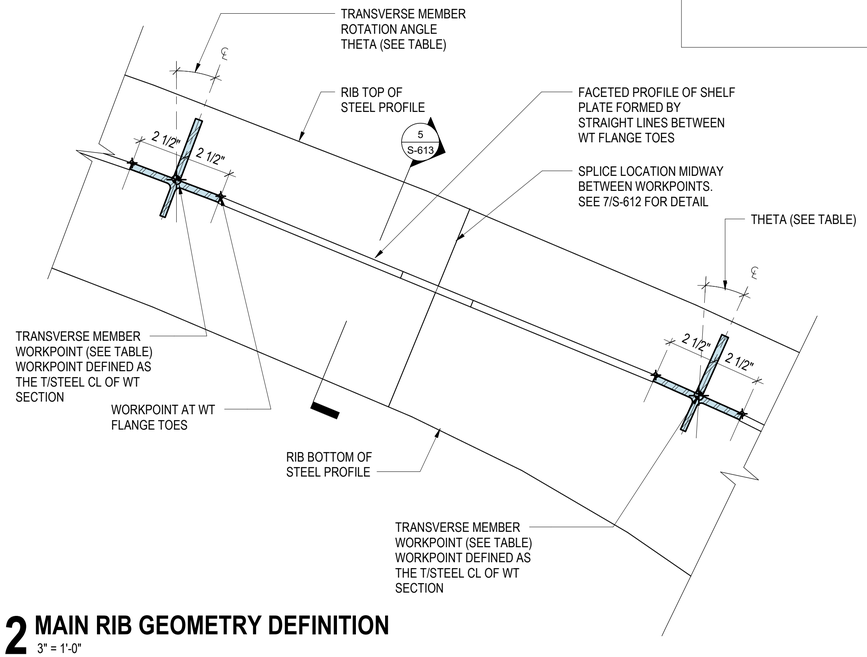

2 MAIN RIB GEOMETRY DEFINITION
3" = 1'-0"

TRANSVERSE MEMBER WORKPOINT TABLE			
WP	Y (ft)	Z (ft)	THETA (DEGREES)
0	0.000	23.104	0.00
1	+/-2.4858	23.030	3.44
2	+/-4.9626	22.806	6.88
3	+/-7.4215	22.434	10.31
4	+/-9.8538	21.916	13.75
5	+/-12.2505	21.253	17.19
6	+/-14.6032	20.447	20.63
7	+/-16.9034	19.501	24.06
8	+/-19.1215	18.398	29.94
9	+/-19.9833	17.869	33.13
10	+/-21.9551	16.381	40.94
11	+/-23.7063	14.639	48.76
12	+/-25.2045	12.675	56.57
13	+/-26.4217	10.525	64.38
14	+/-27.3354	8.230	72.20
15	+/-27.9286	5.832	80.01
16	+/-28.1903	3.376	87.82
17	+/-28.1114	0.9062	N/A

NOTES:

1. (Y,Z) WORKPOINT COORDINATES INDICATED ARE THE HORIZONTAL AND VERTICAL WORKPOINT COORDINATES, RESPECTIVELY. SEE DETAILS 1 & 2
2. NEGATIVE 'Y' WORKPOINT COORDINATES SHOWN ARE FOR THE 'PRIME' (1', 2'...) WORKPOINTS SHOWN ON SECTION 1

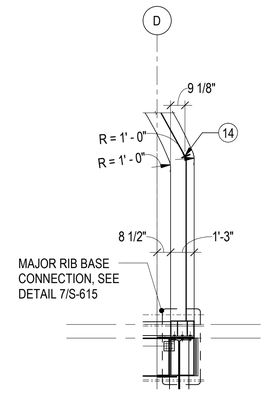

3 MAIN RIB PROFILE AT ROTOGATE - CENTER
1/4" = 1'-0"

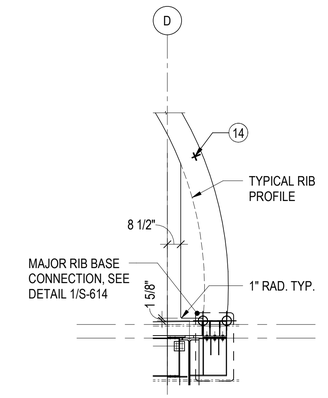

4 MAIN RIB PROFILE AT ROTOGATE - SIDE
1/4" = 1'-0"

DESIGN BY:									
DRAWN BY:									
CHECKED BY:		4	7/3/2023	ISSUED FOR BID					
APPROVED BY:		1	11/4/2022	ISSUED FOR PERMIT REVISION 1					
CDOT/APPROVED BY:		0	9/9/2022	ISSUED FOR PERMIT	MC	MW	BY		
		NO.	DATE	REVISIONS	DES.	DRW.	CHK.	DCCO	CDOT

TRANSYSTEMS
222 SOUTH RIVERSIDE PLAZA SUITE 610
CHICAGO, ILLINOIS 60606

SKIDMORE, OWINGS & MERRILL LLP
224 SOUTH MICHIGAN AVENUE, SUITE 1000
CHICAGO, ILLINOIS 60604

CHICAGO DEPARTMENT
OF TRANSPORTATION
DIVISION OF ENGINEERING

STATE / LAKE LOOP ELEVATED STATION
200 NORTH STATE STREET, CHICAGO, IL 60601

SPEC. NO.

PLATFORM CANOPY GEOMETRY DEFINITION

DRAWING NO.
S-611

CDOT PROJECT D-1-209 | DATE: 9/9/2022 | REVISION NO.4

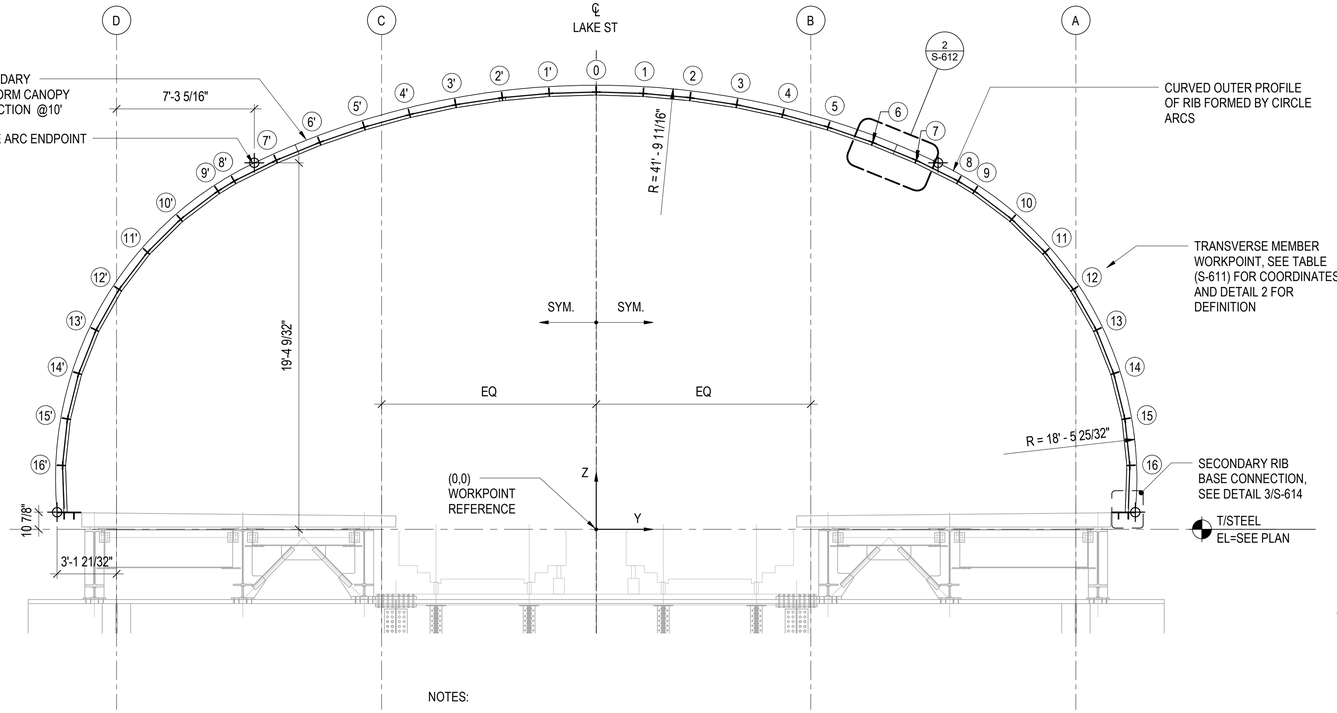

1 SECTION ON SECONDARY RIB

1/4" = 1'-0"

NOTES:

1. THE ABOVE GEOMETRY IS SYMMETRICAL ABOUT THE PROJECT CENTERLINE.
2. THE OUT EDGE RIB GEOMETRY IS DEFINED BY A CHAIN OF CIRCLE ARCS WITH THE WORKPOINTS SHOWN AS ⊕ AND RADII NOTED
3. FOR CLARITY THE LOCATIONS OF THE WORKPOINTS ARE NOTED ON THE LHS OF THE DIAGRAM ONLY. CIRCLE ARC RADII ARE NOTED ON THE RHS OF THE DIAGRAM

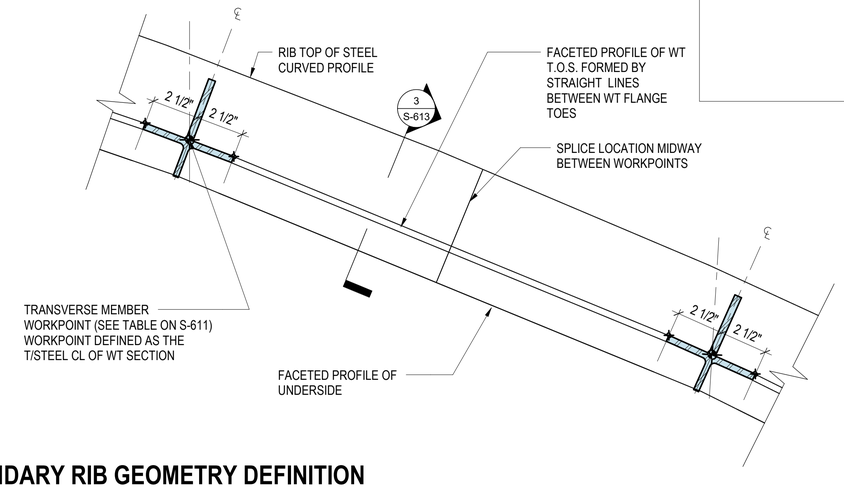

2 SECONDARY RIB GEOMETRY DEFINITION

3" = 1'-0"

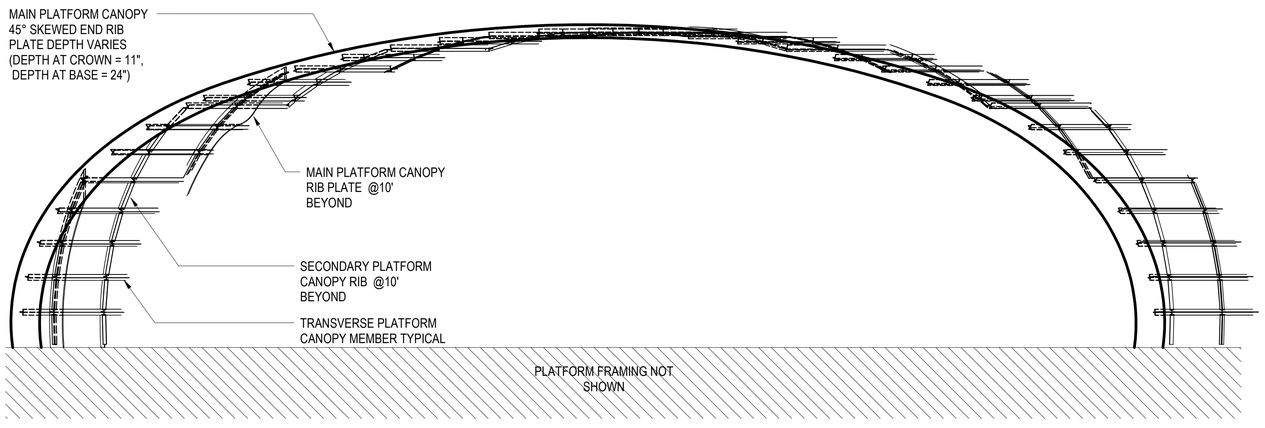

3 END RIB (TRUE ELEVATION)

3/16" = 1'-0"

4 END RIB GEOMETRY (PROJECTED)

3/16" = 1'-0"

NOTES:

1. THE ABOVE PROFILE IS PROJECTED ONTO A PLAN ORIENTED 45 DEGREES TO THE VIEW. SEE PLANS FOR LOCATIONS OF PLANE
2. THE ABOVE PROFILE DEFINES THE CENTERLINE PROFILE OF THE END RIB, SEE DETAIL

DESIGN BY:										TranSystems	SOM
DRAWN BY:											
CHECKED BY:											
APPROVED BY:		4	7/3/2023	ISSUED FOR BID							
CDOT/APPROVED BY:		0	9/9/2022	ISSUED FOR PERMIT	MC	MW	BY				
		NO.	DATE	REVISIONS	DES.	DRW.	CHK.	DCCO	CDOT		

TRANSYSTEMS
222 SOUTH RIVERSIDE PLAZA SUITE 610
CHICAGO, ILLINOIS 60606

SKIDMORE, OWINGS & MERRILL LLP
224 SOUTH MICHIGAN AVENUE, SUITE 1000
CHICAGO, ILLINOIS 60604

CDOT
CHICAGO DEPARTMENT OF TRANSPORTATION
DIVISION OF ENGINEERING

STATE / LAKE LOOP ELEVATED STATION
200 NORTH STATE STREET, CHICAGO, IL 60601

SPEC. NO.

PLATFORM CANOPY GEOMETRY DEFINITION

DRAWING NO.
S-612

CDOT PROJECT D-1-209 | DATE: 9/9/2022 | REVISION NO.4

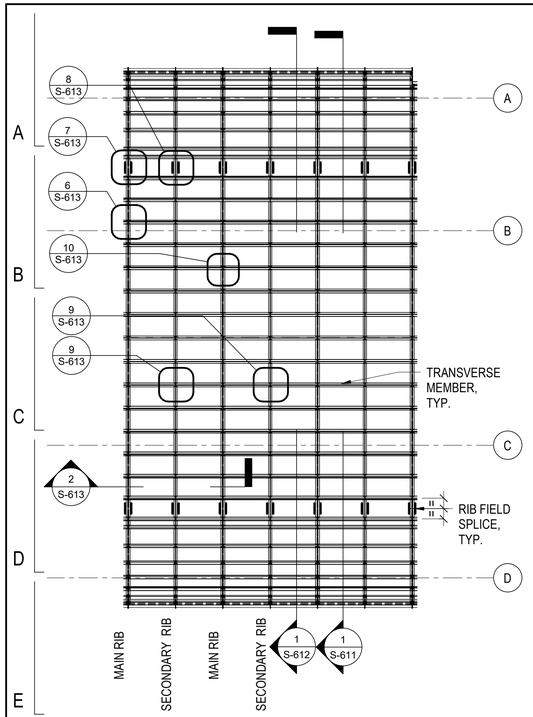

1 PARTIAL PLAN TYPICAL PLATFORM CANOPY
1/8" = 1'-0"

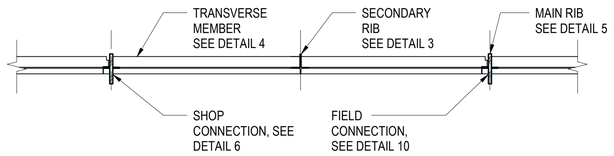

2 PLATFORM CANOPY ASSEMBLY SECTION
1/2" = 1'-0"

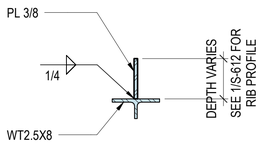

3 SECONDARY RIB SECTION
1 1/2" = 1'-0"

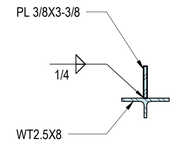

4 TRANSVERSE MEMBER SECTION
1 1/2" = 1'-0"

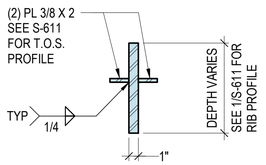

5 MAIN RIB SECTION
1 1/2" = 1'-0"

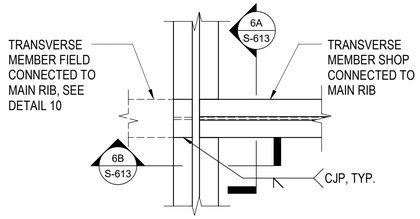

6 MAIN RIB DETAIL
1 1/2" = 1'-0"

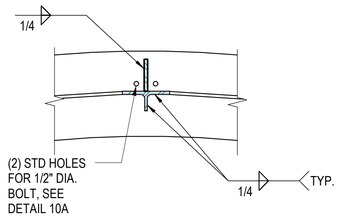

6A SECTION
1 1/2" = 1'-0"

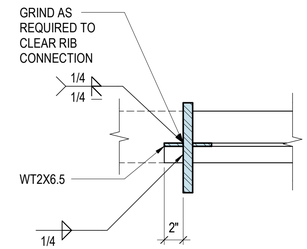

6B SECTION
1 1/2" = 1'-0"

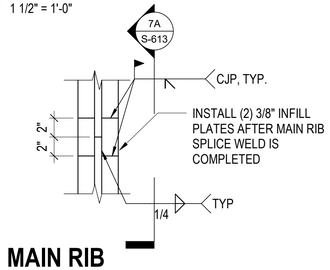

7 MAIN RIB WELDED FIELD SPLICE
1 1/2" = 1'-0"

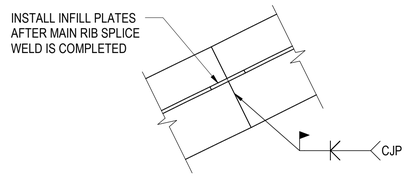

NOTE: PROVIDE ERECTION DEVICE TO HOLD ALL SURFACES IN TRUE ALIGNMENT PRIOR TO WELDING.

7A ELEVATION
1 1/2" = 1'-0"

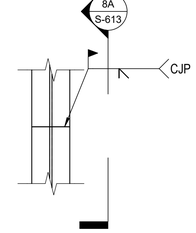

8 SECONDARY RIB WELDED FIELD SPLICE
1 1/2" = 1'-0"

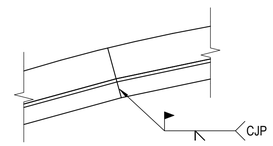

8A ELEVATION
1 1/2" = 1'-0"

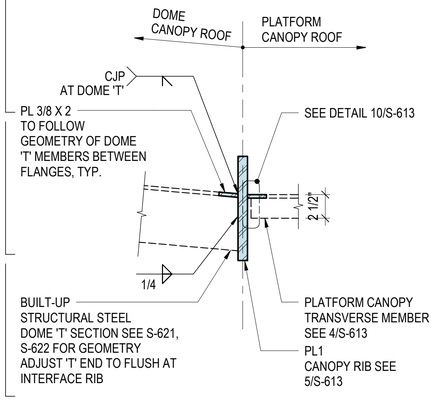

11 DOME/PLATFORM CANOPY RIB INTERFACE DETAIL
1 1/2" = 1'-0"

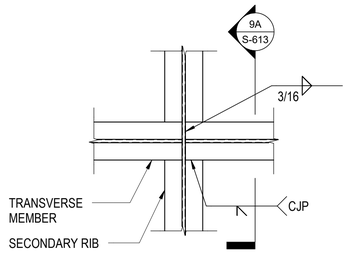

9 SECONDARY RIB DETAIL
1 1/2" = 1'-0"

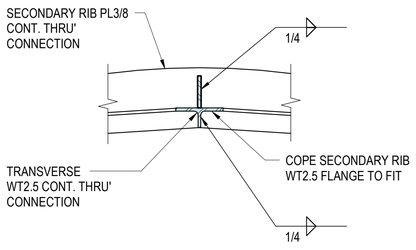

9A SECTION
1 1/2" = 1'-0"

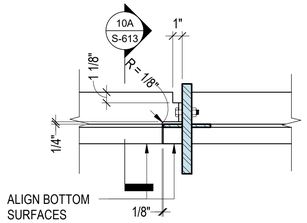

10 CONNECTION DETAIL
1 1/2" = 1'-0"

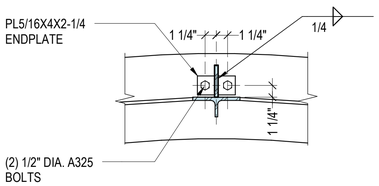

10A SECTION
1 1/2" = 1'-0"

NO.	DATE	REVISIONS	DES.	DRW.	CHK.	DCCO	CDOT
4	7/3/2023	ISSUED FOR BID					
0	9/9/2022	ISSUED FOR PERMIT	MC	MW	BY		

DESIGN BY:
DRAWN BY:
CHECKED BY:
APPROVED BY:
CDOT/APPROVED BY:

TRANSYSTEMS
222 SOUTH RIVERSIDE PLAZA SUITE 610
CHICAGO, ILLINOIS 60606

SKIDMORE, OWINGS & MERRILL LLP
224 SOUTH MICHIGAN AVENUE, SUITE 1000
CHICAGO, ILLINOIS 60604

CHICAGO DEPARTMENT OF TRANSPORTATION
DIVISION OF ENGINEERING

STATE / LAKE LOOP ELEVATED STATION
200 NORTH STATE STREET, CHICAGO, IL 60601

PLATFORM CANOPY DETAILS

SPEC. NO.

DRAWING NO. S-613

CDOT PROJECT D-1-209

DATE: 9/9/2022

REVISION NO.4

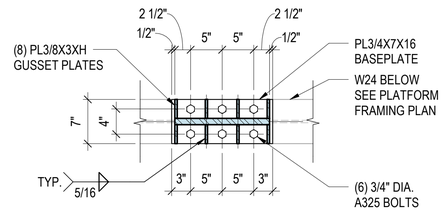

1A SECTION
1" = 1'-0"

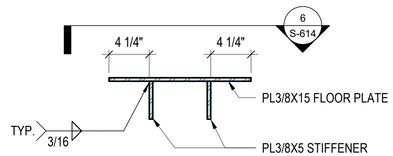

4 FLOORPLATE SECTION
1 1/2" = 1'-0"

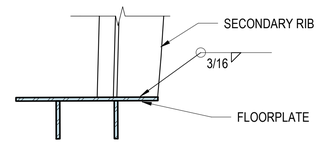

5 SECONDARY RIB BASE CONNECTION
1 1/2" = 1'-0"

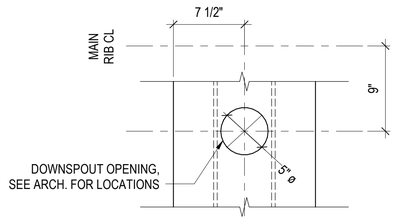

6 FLOORPLATE OPENING
1 1/2" = 1'-0"

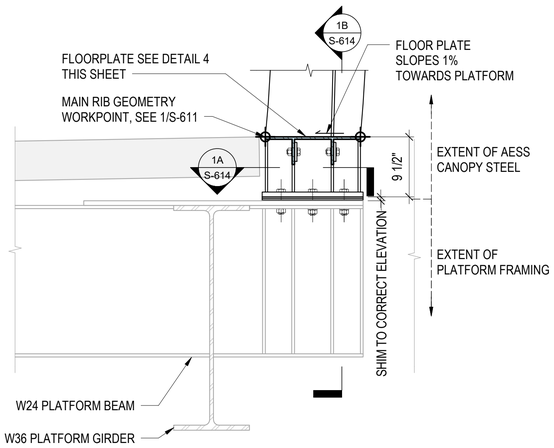

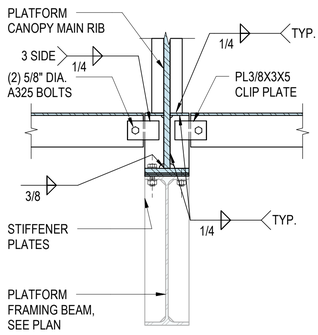

1B SECTION
1" = 1'-0"

1 MAIN RIB BASE CONNECTION DETAIL
1" = 1'-0"

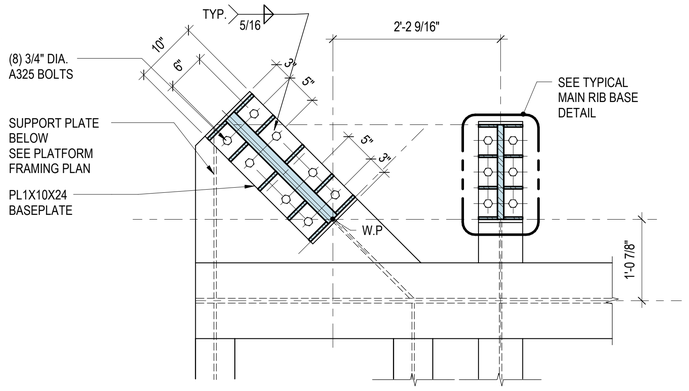

2C END RIB BASE CONNECTION - NW CORNER
1" = 1'-0"

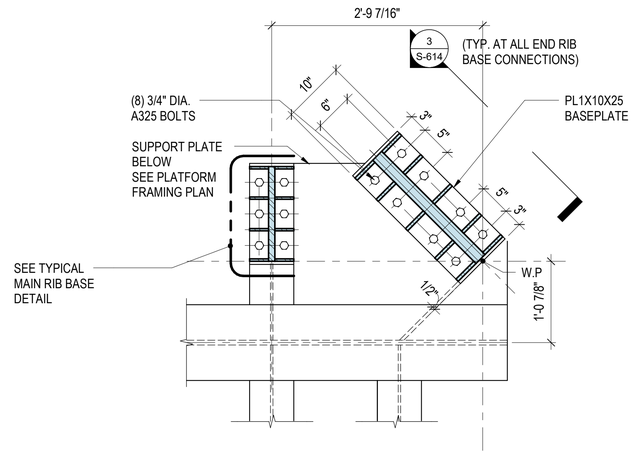

2D END RIB BASE CONNECTION - NE CORNER
1" = 1'-0"

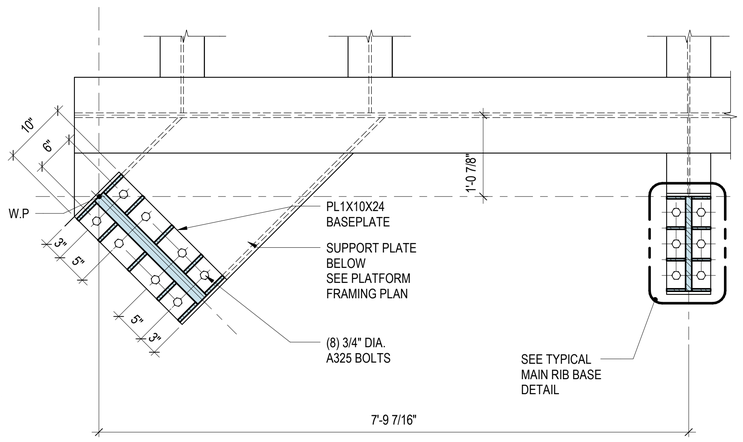

2A END RIB BASE CONNECTION - SW CORNER
1" = 1'-0"

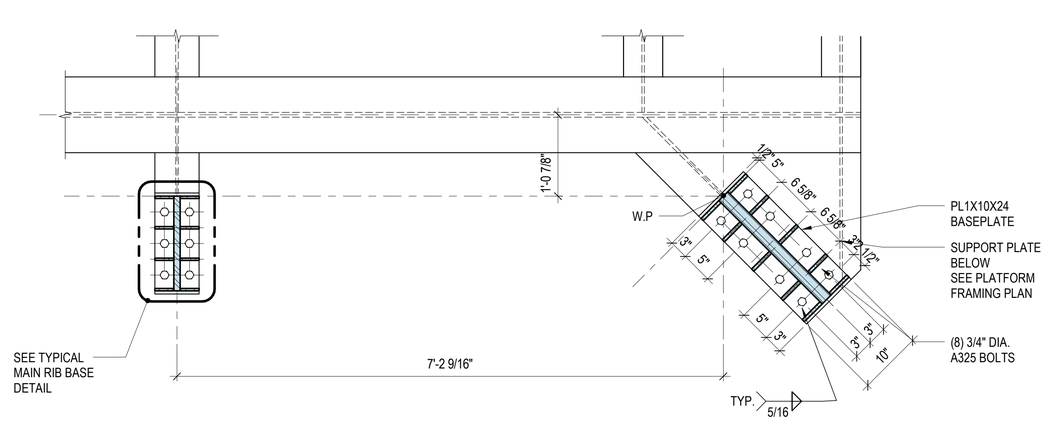

2B END RIB BASE CONNECTION - SE CORNER
1" = 1'-0"

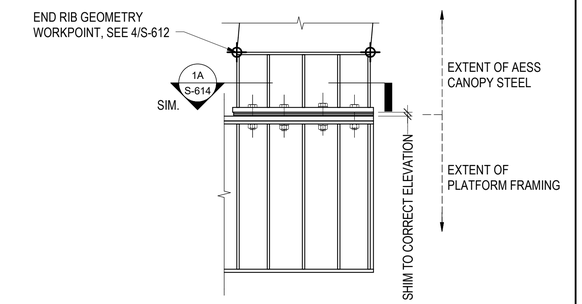

3 END RIB BASE CONNECTION - TYP. ELEVATION
1" = 1'-0"

DESIGN BY:										
DRAWN BY:										
CHECKED BY:		4	7/3/2023	ISSUED FOR BID						
APPROVED BY:		1	11/4/2022	ISSUED FOR PERMIT REVISION 1						
CDOT/APPROVED BY:		0	9/9/2022	ISSUED FOR PERMIT	MC	MW	BY			
		NO.	DATE	REVISIONS	DES.	DRW.	CHK.	DCCO	CDOT	

TRANSYSTEMS
222 SOUTH RIVERSIDE PLAZA SUITE 610
CHICAGO, ILLINOIS 60606

SKIDMORE, OWINGS & MERRILL LLP
224 SOUTH MICHIGAN AVENUE, SUITE 1000
CHICAGO, ILLINOIS 60604

CHICAGO DEPARTMENT
OF TRANSPORTATION
DIVISION OF ENGINEERING

STATE / LAKE LOOP ELEVATED STATION
200 NORTH STATE STREET, CHICAGO, IL 60601

SPEC. NO.

PLATFORM CANOPY DETAILS

DRAWING NO.
S-614

CDOT PROJECT D-1-209

DATE: 9/9/2022

REVISION NO.4

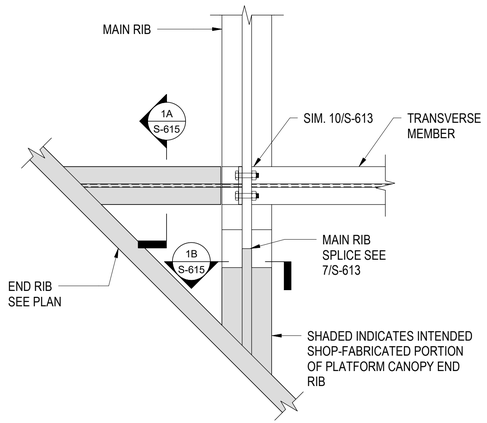

1 END RIB DETAIL
1 1/2" = 1'-0"

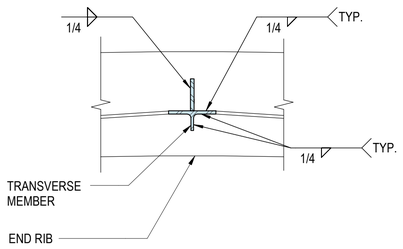

1A SECTION
1 1/2" = 1'-0"

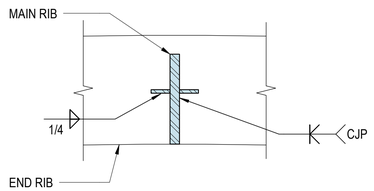

1B SECTION
1 1/2" = 1'-0"

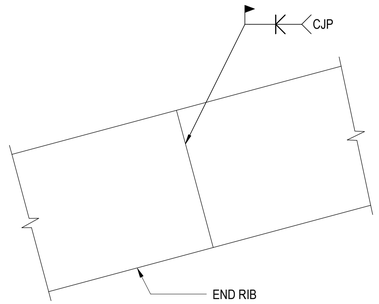

2 END RIB WELDED SPLICE DETAIL
1 1/2" = 1'-0"

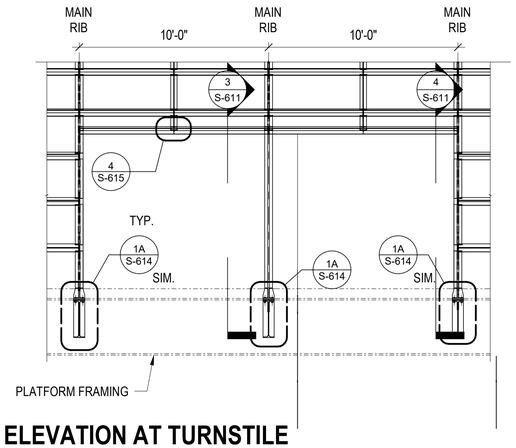

3 TYP. ELEVATION AT TURNSTILE
1/4" = 1'-0"

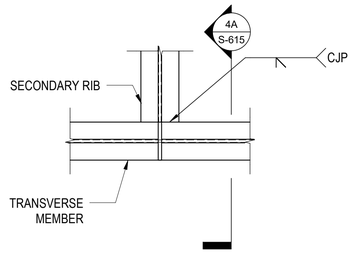

4 SECONDARY RIB DETAIL
1 1/2" = 1'-0"

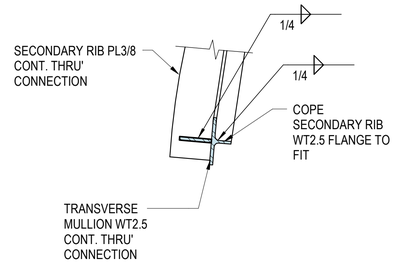

4A SECTION
1 1/2" = 1'-0"

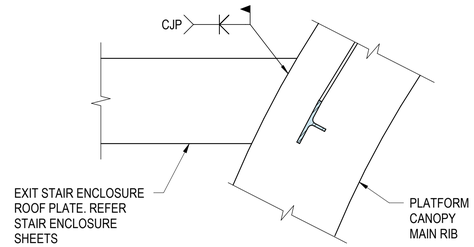

5 DETAIL AT CONNECTION TO EXIT STAIR ENCLOSURE
1 1/2" = 1'-0"

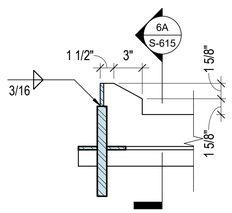

6 FALL PROTECTION ANCHOR LOCATION
1 1/2" = 1'-0"

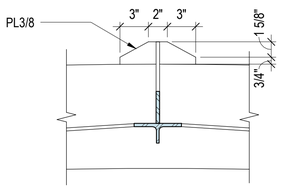

6A SECTION
1 1/2" = 1'-0"

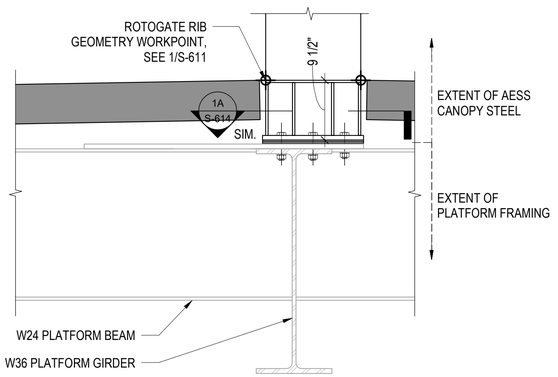

7 ROTOGATE RIB BASE CONNECTION DETAIL
1" = 1'-0"

DESIGN BY:										
DRAWN BY:										
CHECKED BY:		4	7/3/2023	ISSUED FOR BID						
APPROVED BY:		1	11/4/2022	ISSUED FOR PERMIT REVISION 1						
CDOT/APPROVED BY:		0	9/9/2022	ISSUED FOR PERMIT	MC	MW	BY			
		NO.	DATE	REVISIONS	DES.	DRW.	CHK.	DCCO	CDOT	

TranSystems
TRANSYSTEMS
222 SOUTH RIVERSIDE PLAZA SUITE 610
CHICAGO, ILLINOIS 60606

SOM
SKIDMORE, OWINGS & MERRILL LLP
224 SOUTH MICHIGAN AVENUE, SUITE 1000
CHICAGO, ILLINOIS 60604

CDOT
CHICAGO DEPARTMENT
OF TRANSPORTATION
DIVISION OF ENGINEERING

STATE / LAKE LOOP ELEVATED STATION
200 NORTH STATE STREET, CHICAGO, IL 60601

PLATFORM CANOPY DETAILS

CDOT PROJECT D-1-209 | DATE: 9/9/2022

SPEC. NO.

DRAWING NO.
S-615

REVISION NO.4

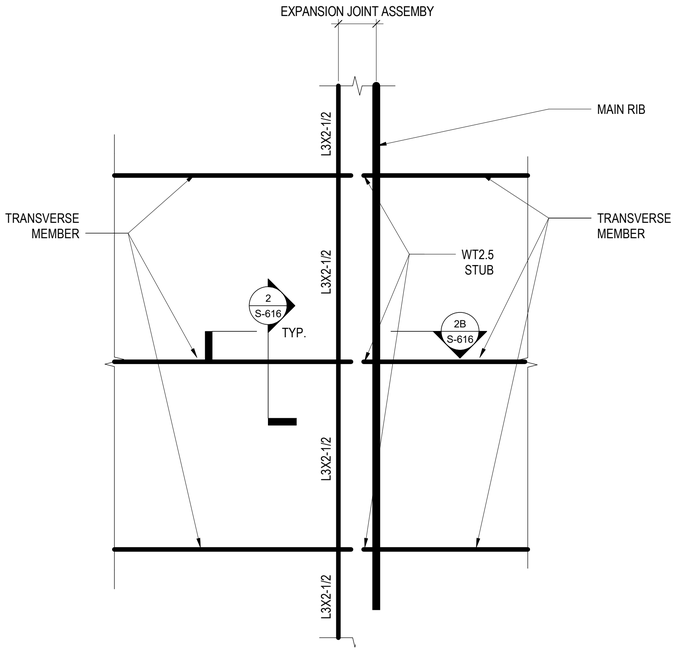

1 PLAN AT CANOPY STRUCTURE EXPANSION JOINT DETAIL
1" = 1'-0"

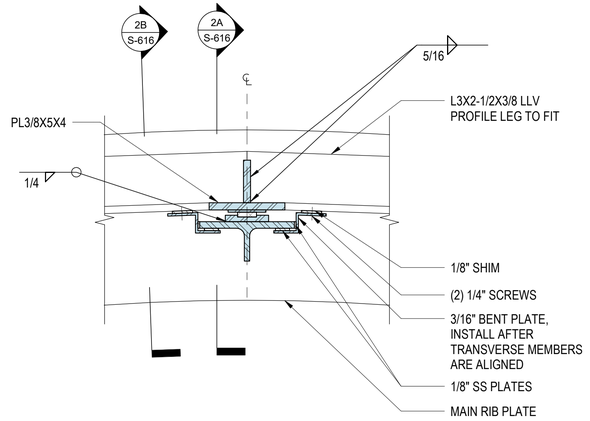

2 SECTION DETAIL
3" = 1'-0"

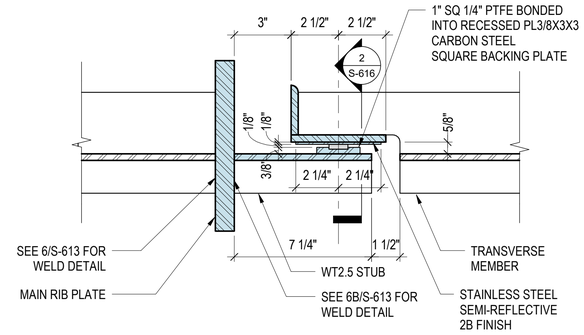

2A PLATFORM CANOPY EXPANSION JOINT DETAIL
3" = 1'-0"

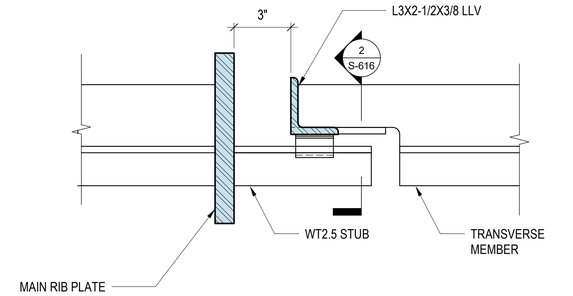

2B PLATFORM CANOPY EXPANSION JOINT DETAIL
3" = 1'-0"

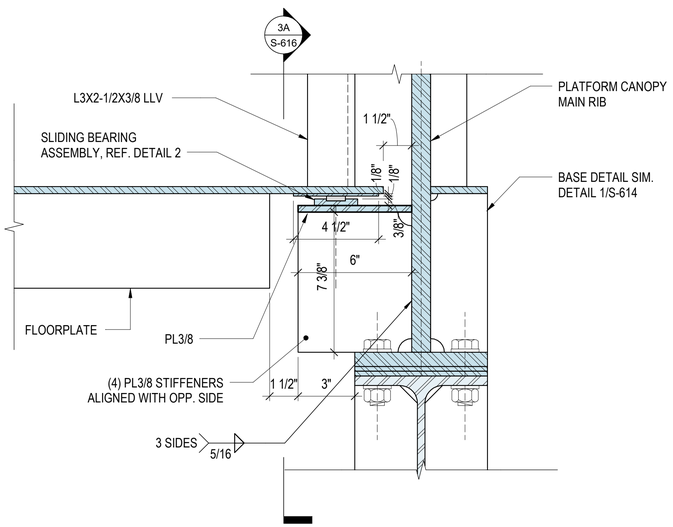

3 EXPANSION JOINT DETAIL AT FLOORPLATE
3" = 1'-0"

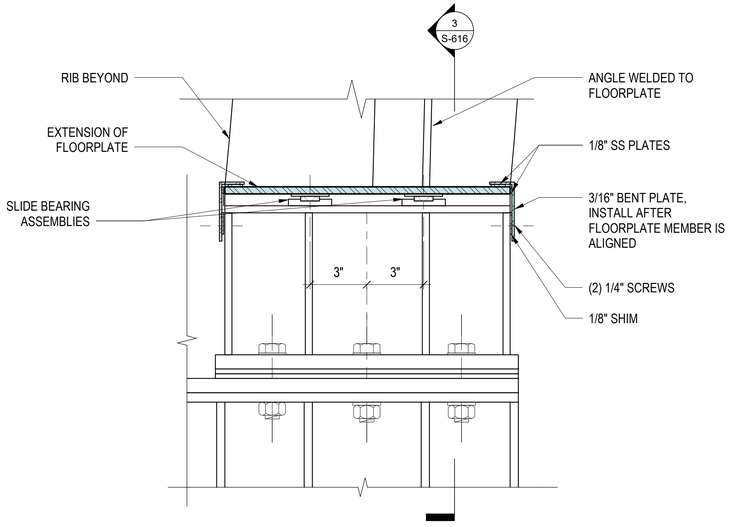

3A EXPANSION JOINT DETAIL AT FLOORPLATE
3" = 1'-0"

DESIGN BY:										
DRAWN BY:		4	7/3/2023	ISSUED FOR BID						
CHECKED BY:		2	1/13/2023	ISSUED FOR PERMIT REVISION 2						
APPROVED BY:		1	11/4/2022	ISSUED FOR PERMIT REVISION 1						
CDOT/APPROVED BY:		0	9/9/2022	ISSUED FOR PERMIT	MC	MW	BY			
		NO.	DATE	REVISIONS	DES.	DRW.	CHK.	DCCO	CDOT	

TRANSYSTEMS
222 SOUTH RIVERSIDE PLAZA SUITE 610
CHICAGO, ILLINOIS 60606

SKIDMORE, OWINGS & MERRILL LLP
224 SOUTH MICHIGAN AVENUE, SUITE 1000
CHICAGO, ILLINOIS 60604

CHICAGO DEPARTMENT OF TRANSPORTATION
DIVISION OF ENGINEERING

STATE / LAKE LOOP ELEVATED STATION
200 NORTH STATE STREET, CHICAGO, IL 60601

SPEC. NO.

PLATFORM CANOPY DETAILS

DRAWING NO.
S-616

CDOT PROJECT D-1-209

DATE: 9/9/2022

REVISION NO.4

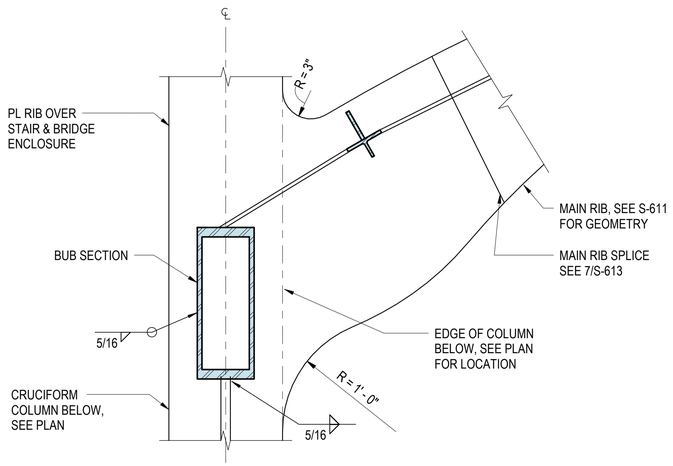

1 MAIN RIB TO CRUCIFORM COLUMN CONNECTION AT STAIR AND BRIDGE ENCLOSURE

1 1/2" = 1'-0"

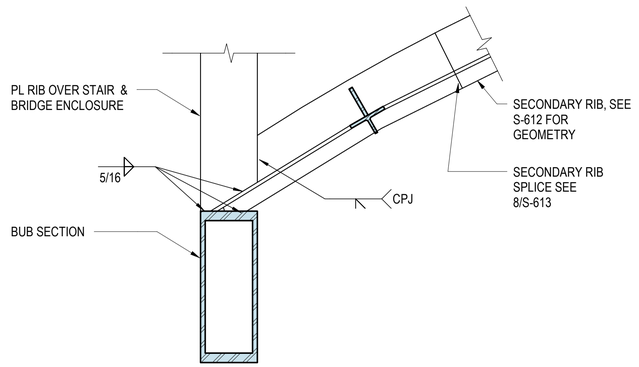

2 SECONDARY RIB CONNECTION

1 1/2" = 1'-0"

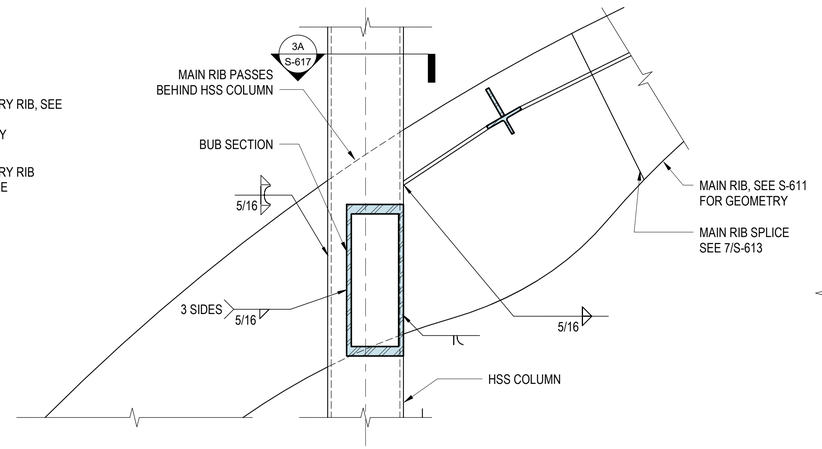

3 MAIN RIB TO HSS COLUMN

1 1/2" = 1'-0"

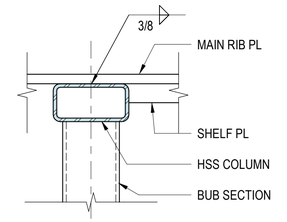

3A SECTION

1 1/2" = 1'-0"

NO.	DATE	REVISIONS	DES.	DRW.	CHK.	DCCO	CDOT
4	7/3/2023	ISSUED FOR BID					
0	9/9/2022	ISSUED FOR PERMIT	MC	MW	BY		

DESIGN BY:
DRAWN BY:
CHECKED BY:
APPROVED BY:
CDOT/APPROVED BY:

TRANSYSTEMS
222 SOUTH RIVERSIDE PLAZA SUITE 610
CHICAGO, ILLINOIS 60606

SKIDMORE, OWINGS & MERRILL LLP
224 SOUTH MICHIGAN AVENUE, SUITE 1000
CHICAGO, ILLINOIS 60604

CHICAGO DEPARTMENT OF TRANSPORTATION
DIVISION OF ENGINEERING

STATE / LAKE LOOP ELEVATED STATION
200 NORTH STATE STREET, CHICAGO, IL 60601

SPEC. NO.

PLATFORM CANOPY DETAILS

DRAWING NO. S-617

CDOT PROJECT D-1-209

DATE: 9/9/2022

REVISION NO.4

DOME CANOPY SPECIAL FABRICATION & ERECTION NOTES

1. THE FOLLOWING NOTES REFLECT THE INTENDED GENERAL PARAMETERS FOR THE FABRICATION AND ERECTION OF THE DOME CANOPY STRUCTURE. THE CONTRACTOR SHALL DEVELOP A COMPLETE FABRICATION, TRANSPORTATION AND ERECTION METHODS STATEMENT, FOR REVIEW BY THE ARCHITECT, ENGINEER AND COMMISSIONER, PRIOR TO FABRICATION. THE CONTRACTOR'S METHOD STATEMENT SHALL ADDRESS THE INTENDED MEANS FOR FABRICATION OF THE INDIVIDUAL MEMBERS AND NODES, INCLUDING FIT-UP, TO THE PRESCRIBED TOLERANCES. IT SHALL ALSO INCLUDE MEANS OF MAINTAINING GEOMETRY AND INTEGRITY OF ASSEMBLIES DURING TRANSPORTATION AND HANDLING, AND THE MEANS OF ERECTION OFF-SITE AND ON-SITE, INCLUDING TEMPORARY SUPPORT AND SEQUENCE OF REMOVAL OF TEMPORARY SUPPORT. THE CONTRACTOR'S MEANS OF ERECTION IS SUBJECT TO THE TRACK ACCESS PERIOD (SEE S-004) AND IN THE SPECIFICATIONS. THE CONTRACTOR SHALL DEVELOP A DETAILED SURVEYING PLAN FOR MONITORING THE POSITION OF THE STRUCTURE AT EACH STAGE OF CONSTRUCTION. (SEE SURVEY AND TOLERANCE NOTES ON S-600).

2. THE DOME CANOPY STRUCTURE IS NOT SELF-SUPPORTING UNTIL THE COMPLETE CANOPY, BRACED FRAME SUPPORT/ABUTMENT STRUCTURES, AND TENSION TIES ARE FULLY CONSTRUCTED AND CONNECTED. IT IS ENVISIONED THAT THE CANOPY IS TO BE SUPPORTED ON TEMPORARY SHORING DURING CONSTRUCTION. THE SHORING SHALL INCLUDE JACKS OR OTHER MEANS TO ALLOW ADJUSTMENT OF THE DOME CANOPY TO THE THEORETICAL SPATIAL COORDINATES.

3. IT IS EXPECTED THAT THE DOME CANOPY STRUCTURE IS SHOP FABRICATED, ASSEMBLED AND TRANSPORTED AS LARGER SUBASSEMBLIES. THE SUBASSEMBLY SIZES SHOWN ON DETAIL 1 ARE ESTIMATED MINIMUM PIECE SIZES BASED ON ASSUMED TRANSPORT SIZE LIMITS.

4. BASED ON SITE LOGISTICS, LIFTING SIZE AND WEIGHT, AND BASED ON THE CONTRACTOR'S PROPOSED CONSTRUCTION METHOD, MULTIPLE SUBASSEMBLIES MAY BE CONNECTED AT AN ON-SITE STAGING AREA, PRIOR TO LIFTING INTO PLACE.

5. DURING FABRICATION AND ASSEMBLY, THE CONTRACTOR SHALL EMPLOY A JIG FRAME OR OTHER MEANS TO PRECISELY CONTROL THE GEOMETRIC POSITIONING AND ALIGNMENT OF THE MEMBERS AND NODES OF EACH SUBASSEMBLY DURING FABRICATION, AND MAINTAIN DURING TRANSPORTATION, AND ERECTION.

6. **OFF-SITE ASSEMBLY**

   A. PRIOR TO ON-SITE ERECTION, THE DOME CANOPY STRUCTURE SHALL BE FABRICATED AND FULLY ASSEMBLED/ERECTED OFF-SITE, UNDER SUPPORT CONDITIONS WHICH REPRESENT THE PERMANENT SUPPORT STRUCTURE, AND UPON SHORING CONDITIONS WHICH REPRESENT THE CONTRACTOR'S INTENDED MEANS OF ERECTION ON SITE.

   B. THIS OFF-SITE ERECTION APPROACH IS INTENDED TO CONFIRM FABRICATION GEOMETRY ACCURACY ALONG WITH THE CONTRACTOR'S INTENDED METHOD FOR LIFTING, SHORING (INCLUDING SHORING ADJUSTMENTS), FIELD CONNECTIONS, AND THE SHORING REMOVAL SEQUENCE. THIS OFF-SITE ERECTION PROGRAM SHALL BE ATTENDED AND WITNESSED BY THE COMMISSIONER, AND THE ARCHITECT & ENGINEER, PROVIDING NOT LESS THAN 2 WEEK ADVANCED NOTICE OF COMMENCING WORK.

   C. OFF-SITE ERECTION INCLUDES STRUCTURAL STEEL ONLY AND DOES NOT INCLUDE GLAZING.

   D. OFF-SITE ERECTION MAY PROCEED IN THE FOLLOWING MANNER, OR VIA AN ALTERNATIVE MANNER AS DEVELOPED BY THE CONTRACTOR:

      PRE-FABRICATED SUBASSMEBLIES (AS SHOWN ON DETAIL 1) ARE TRANSPORTED TO THE OFF-SITE ERECTION LOCATION AND SUPPORTED UPON TEMPORARY SHORING.

      INFILL MEMBERS (AS SHOWN ON DETAIL 1) ADJOINGING THE PREFABRICATED SUBASSEMBLIES ARE ALIGNED AND FULLY CONNECTED

   E. ERECTION IS INTENDED TO START FROM THE SUPPORT ABUTMENT LOCATIONS AND PROCEED TOWARDS THE CROWN.

   F. WHILE THE DOME CANOPY IS SHORED THE CONTRACTOR SHALL SURVEY TO VERIFY THE POSITION AND GEOMETRY OF THE STRUCTURE. SEE CANOPY SURVEY NOTES ON S-600. THE SURVEY RESULTS SHALL BE MADE AVAILABLE FOR REVIEW TO THE COMMISSIONER AND THE ARCHITECT.

   G. AFTER COMPLETE OFF-SITE ERECTION AND SURVEY OF THE DOME CANOPY, SHORING SHALL DISENGAGE IN A SEQUENCE ESTABLISHED BY THE CONTRACTOR. GENERALLY, REMOVAL SHALL INITIATE FROM THE CENTER/CROWN OF THE DOME AND PROCEED TOWARDS THE SUPPORTS.

   H. IT IS EXPECTED THAT THE FULLY ERECTED DOME CANOPY WILL BE RE-SHORED AND DIVIDED INTO SUBASSEMBLIES, FOR TRANSPORTATION TO SITE. ASSEMBLY SIZES CUT FROM THE OFF-SITE ERECTION (SEE DETAIL 1 FOR ENVISIONED CUT LOCATIONS) SHALL BE MADE AS LARGE AS POSSIBLE FOR TRANSPORT TO SITE, IN ORDER TO MINIMIZE THE AMOUNT OF ON-SITE SPLICE CONNECTIONS REQUIRED.

7. **ON-SITE ASSEMBLY**

   A. THE SUBASSEMBLIES, DELIVERED TO SITE FROM THE OFF-SITE ERECTION LOCATION, ARE INTENDED TO BE LIFTED INTO PLACE ON ADJUSTABLE SHORING, REALIGNED, AND FIELD SPLICED. WHEN ALIGNING THE SUBASSEMBLIES CUT FROM THE OFF-SITE ERECTION, SET GAPS (WELD ROOT) AT SPLICE LOCATIONS TO THE WIDTH OF THE SAW-CUT (DO NOT ABUT). PRIOR TO SPLICE WELDING ASSEMBLIES, PLACE ASSEMBLIES ONTO THE SHORING STARTING FROM THE SUPPORT LOCATIONS AND UNIFORMLY/SYMMETRICALLY SETTING ASSEMBLIES TOWARDS THE CROWN. ASSEMBLIES MAY BE ALIGNED TEMPORARILY VIA ERECTION CLIPS OR OTHER MEANS, PRIOR TO WELDING.

   B. THE 'TOWER' FRAME STRUCTURE SUPPORTING THE DOME CANOPY, AND THE PLATFORM FRAMING INCLUDING THE W36 TENSION TIE MEMBERS SHALL BE FULLY ERECTED AND CONNECTIONS/SPLICES COMPLETE, PRIOR TO TRANSFER OF THE DOME CANOPY WEIGHT/LOADS TO THE SUPPORTING STRUCTURE. CONTRACTOR SHALL VERIFY AND CERTIFY THAT ALL CONNECTIONS ARE COMPLETE PRIOR TO TRANSFER.

   C. ONCE THE FULL DOME STRUCTURE IS ALIGNED AND FULLY CONNECTED, AND ALL SUPPORT STRUCTURES FULLY COMPLETED, THE CONTRACTOR SHALL REMOVE THE TEMPORARY SHORING IN A CONTROLLED MANNER BASED ON THE SEQUENCE DETERMINED AT THE OFF-SITE ERECTION.

   D. THE DOME CANOPY IS DEFINED AS AESS AS PER SHEET S-603 AND UNLESS OTHERWISE NOTED SHALL BE FABRICATED AND ERECTED TO MEET THE ASSOCIATED REQUIREMENTS. REFER TO THE AESS NOTES AND SPECIFICATIONS.

   E. GLAZING IS INTENDED TO BE INSTALLED ON THE FULLY ERECTED, UNSHORED DOME STRUCTURE. GLAZING SHALL BE INSTALLED IN A MANNER WHICH IS SYMMETRICAL AND AVOIDS UNBALANCED LOADING CONDITIONS. GENERALLY, INSTALLATION SHALL PROCEED FROM THE BASE SUPPORTS AND PERIMETER, AND ADVANCE TOWARDS THE CROWN.

   F. WEEKEND CLOSURES, AS PERMITTED BY THE SPECIFICATIONS WOULD ALLOW THE CONSTRUCTION AND EVENTUAL REMOVAL OF THE TEMPORARY SHORING.

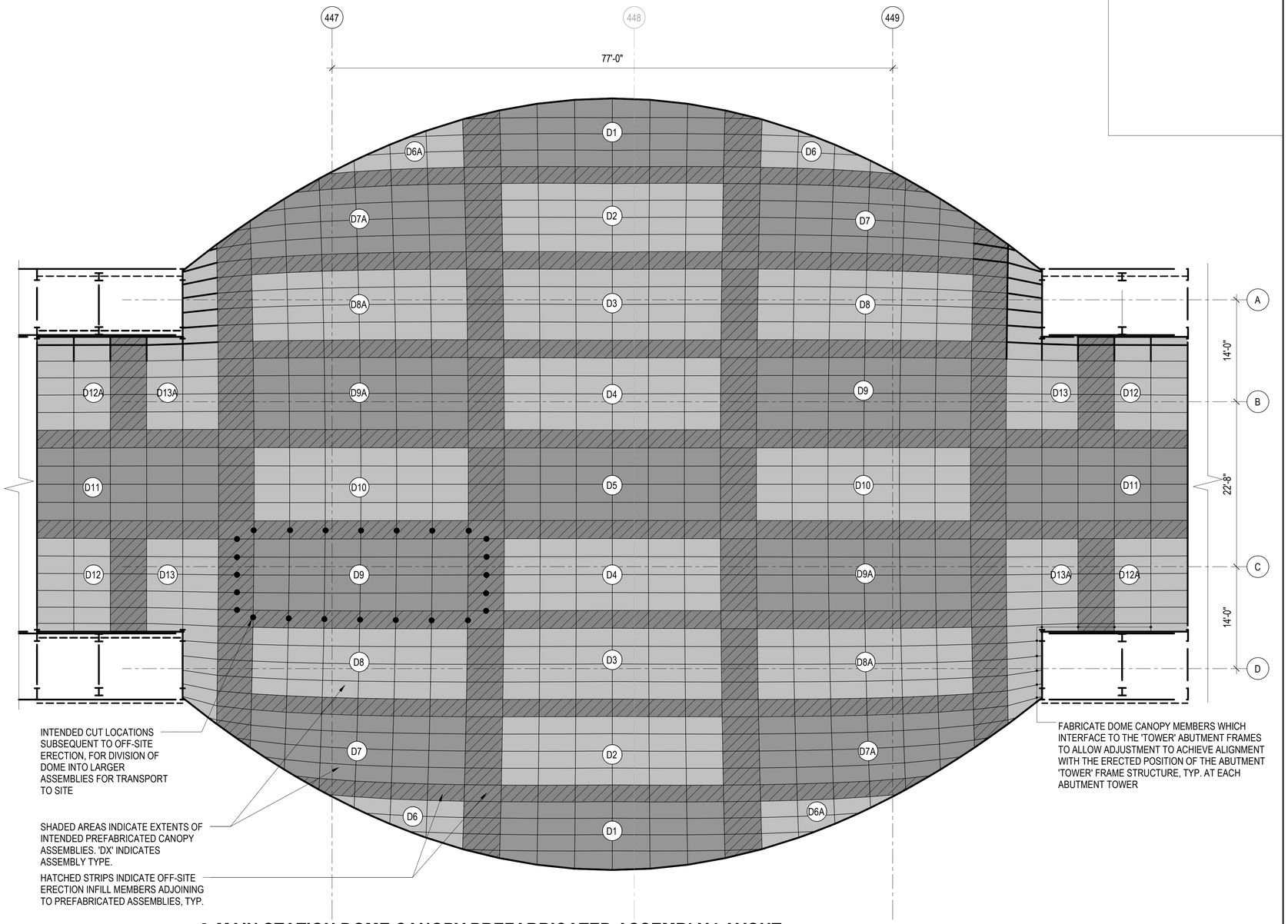

1 MAIN STATION DOME CANOPY PREFABRICATED ASSEMBLY LAYOUT

1/8" = 1'-0"

DESIGN BY:									
DRAWN BY:									
CHECKED BY:									
APPROVED BY:		4	7/3/2023	ISSUED FOR BID					
CDOT/APPROVED BY:		0	9/9/2022	ISSUED FOR PERMIT	MC	MW	BY		
		NO.	DATE	REVISIONS	DES.	DRW.	CHK.	DCCO	CDOT

TRANSYSTEMS
222 SOUTH RIVERSIDE PLAZA SUITE 610
CHICAGO, ILLINOIS 60606

SKIDMORE, OWINGS & MERRILL LLP
224 SOUTH MICHIGAN AVENUE, SUITE 1000
CHICAGO, ILLINOIS 60604

CHICAGO DEPARTMENT OF TRANSPORTATION
DIVISION OF ENGINEERING

STATE / LAKE LOOP ELEVATED STATION
200 NORTH STATE STREET, CHICAGO, IL 60601

DOME CANOPY PREFABRICATED ASSEMBLY LAYOUT

CDOT PROJECT D-1-209

DATE: 9/9/2022

SPEC. NO.

DRAWING NO. S-620

REVISION NO.4

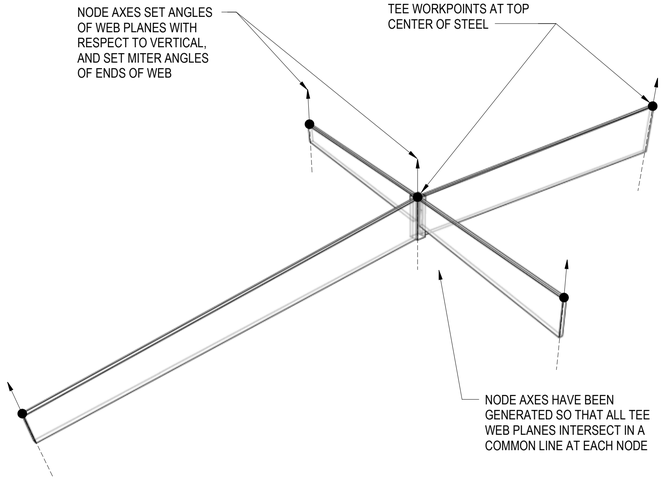

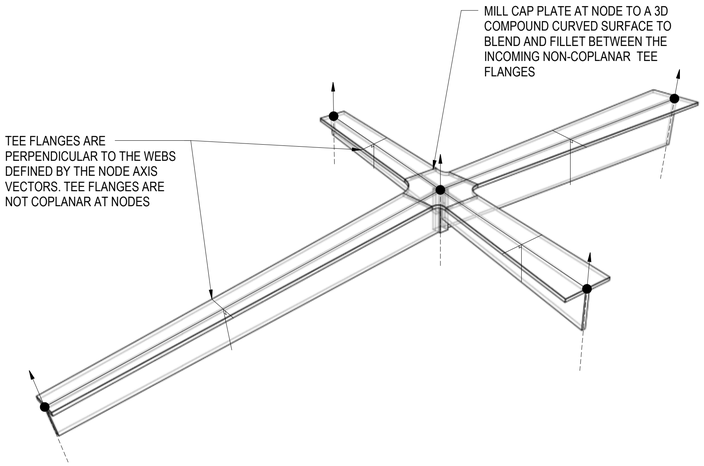

3 NODE AND MEMBER GEOMETRY 3D VIEW

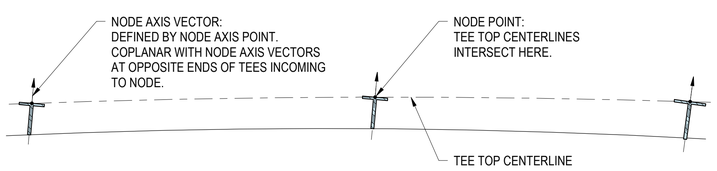

2 NODE AND MEMBER GEOMETRY DEFINITION

1" = 1'-0"

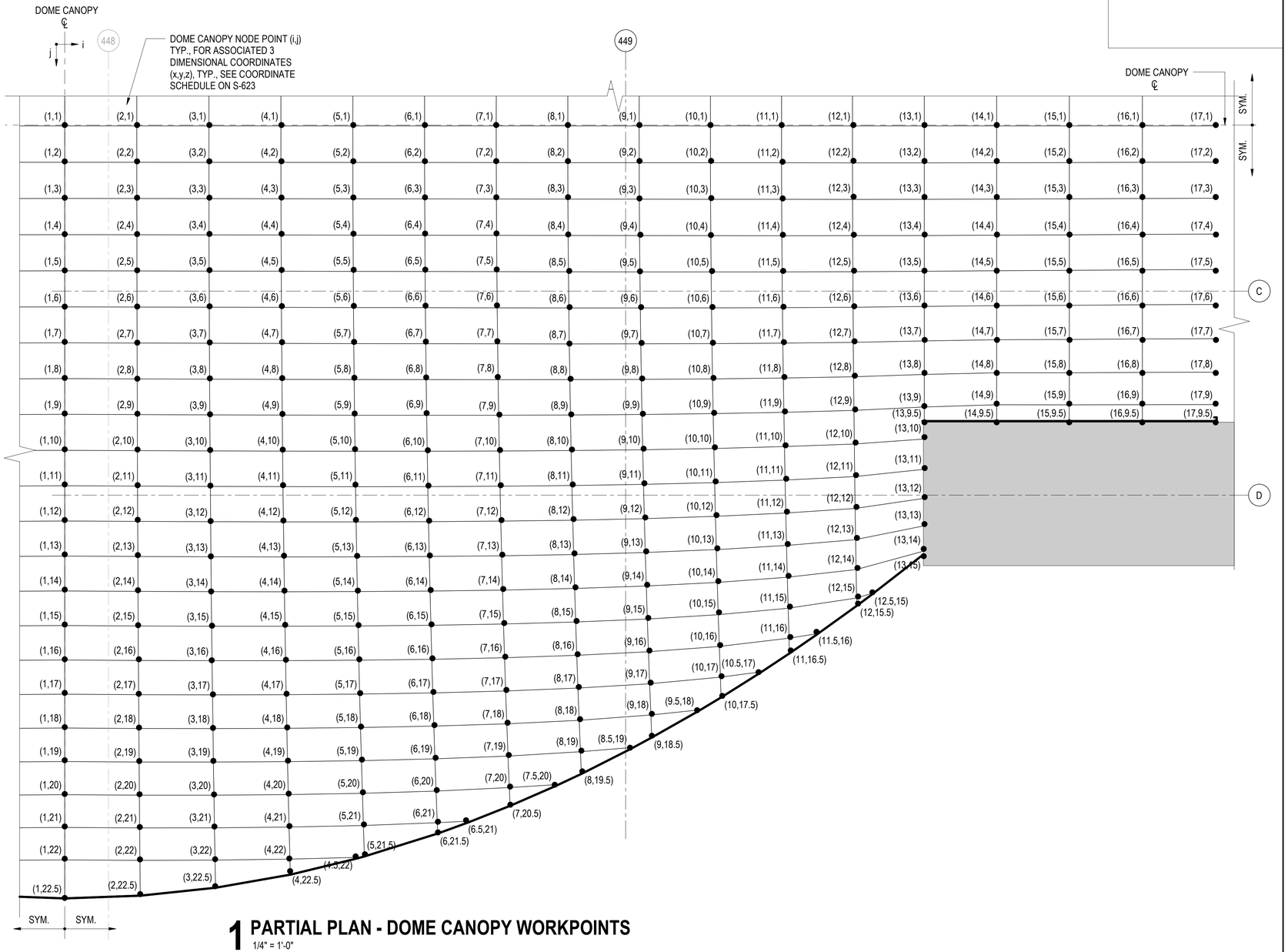

1 PARTIAL PLAN - DOME CANOPY WORKPOINTS

1/4" = 1'-0"

DESIGN BY:										
DRAWN BY:										
CHECKED BY:										
APPROVED BY:		4	7/3/2023	ISSUED FOR BID						
CDOT/APPROVED BY:		0	9/9/2022	ISSUED FOR PERMIT	MC	MW	BY			
		NO.	DATE	REVISIONS	DES.	DRW.	CHK.	DCCO	CDOT	

TRANSYSTEMS
222 SOUTH RIVERSIDE PLAZA SUITE 610
CHICAGO, ILLINOIS 60606

SKIDMORE, OWINGS & MERRILL LLP
224 SOUTH MICHIGAN AVENUE, SUITE 1000
CHICAGO, ILLINOIS 60604

CHICAGO DEPARTMENT OF TRANSPORTATION
DIVISION OF ENGINEERING

STATE / LAKE LOOP ELEVATED STATION
200 NORTH STATE STREET, CHICAGO, IL 60601

SPEC. NO.

DOME CANOPY GEOMETRY DEFINITION

DRAWING NO. S-621

CDOT PROJECT D-1-209 | DATE: 9/9/2022 | REVISION NO. 4

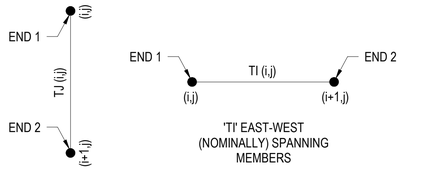

'TJ' NORTH-SOUTH
(NOMINALLY)
SPANNING MEMBERS

'TI' EAST-WEST
(NOMINALLY) SPANNING
MEMBERS

NOTE:
FRACTIONAL i OR j VALUES INDICATE
MEMBERS CUT OFF BY BOUNDARY.

2 KEY
NTS

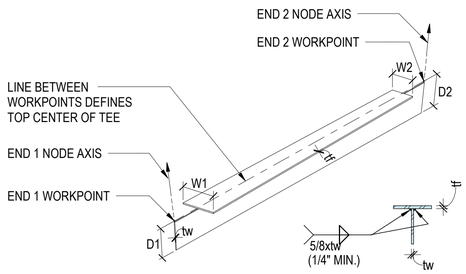

3 DOME BUILT-UP TEE 3D VIEW
1 1/2" = 1'-0"

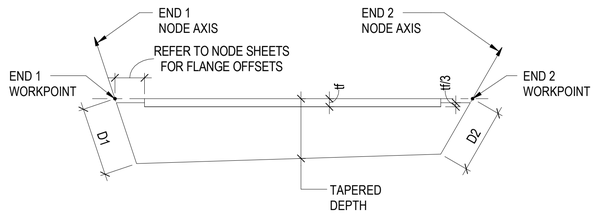

4 DOME BUILT-UP TEE ELEVATION
1 1/2" = 1'-0"

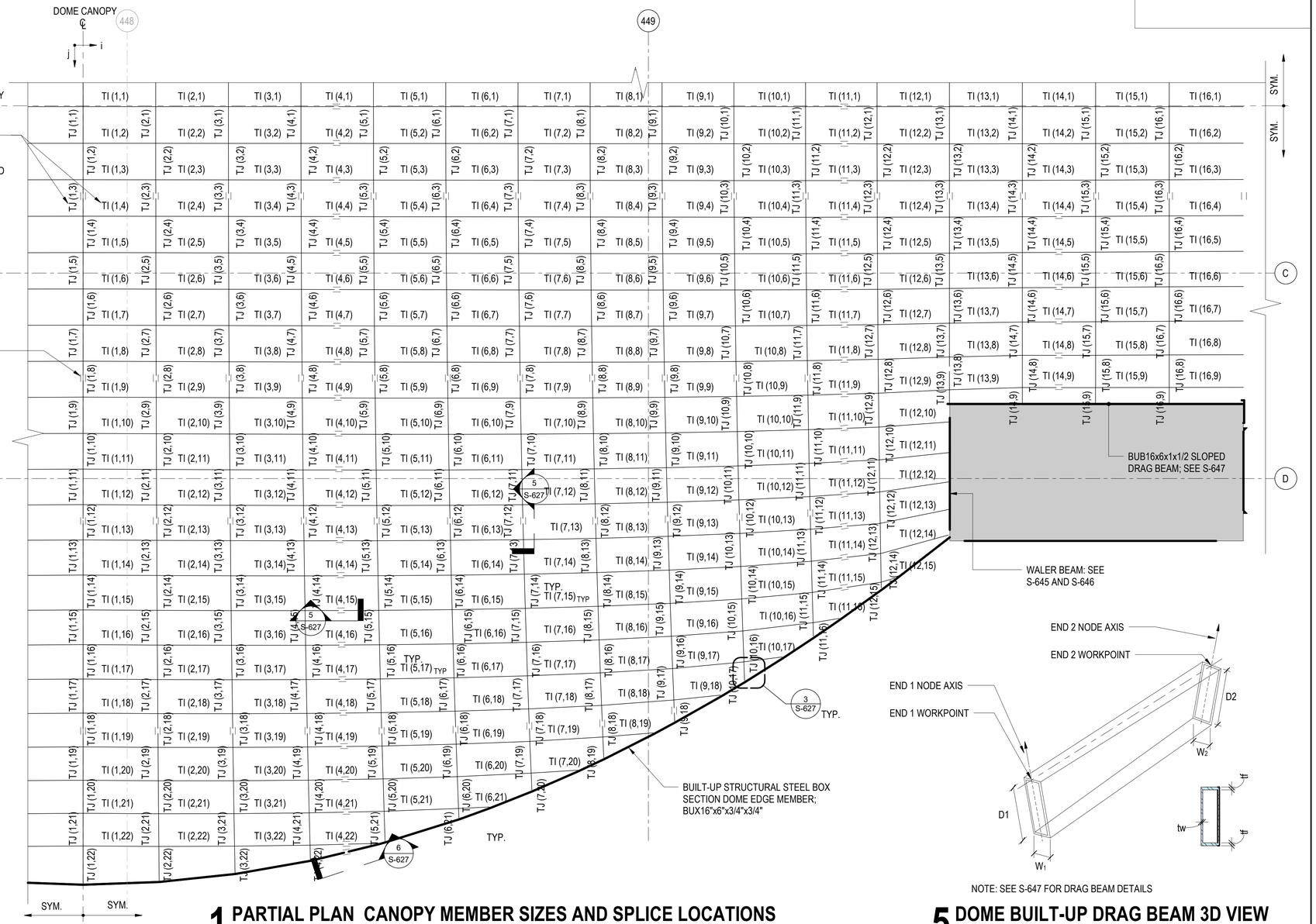

1 PARTIAL PLAN CANOPY MEMBER SIZES AND SPLICE LOCATIONS
1/4" = 1'-0"

NOTE: SEE S-647 FOR DRAG BEAM DETAILS

5 DOME BUILT-UP DRAG BEAM 3D VIEW
1 1/2" = 1'-0"

DESIGN BY:										
DRAWN BY:										
CHECKED BY:		4	7/3/2023	ISSUED FOR BID						
		2	1/13/2023	ISSUED FOR PERMIT REVISION 2						
APPROVED BY:		0	9/9/2022	ISSUED FOR PERMIT	MC	MW	BY			
CDOT/APPROVED BY:		NO.	DATE	REVISIONS	DES.	DRW.	CHK.	DCCO	CDOT	

TranSystems
TRANSYSTEMS
222 SOUTH RIVERSIDE PLAZA SUITE 610
CHICAGO, ILLINOIS 60606

SOM
SKIDMORE, OWINGS & MERRILL LLP
224 SOUTH MICHIGAN AVENUE, SUITE 1000
CHICAGO, ILLINOIS 60604

CDOT
CHICAGO DEPARTMENT
OF TRANSPORTATION
DIVISION OF ENGINEERING

STATE / LAKE LOOP ELEVATED STATION
200 NORTH STATE STREET, CHICAGO, IL 60601

SPEC. NO.

DOME CANOPY MEMBER SIZES

DRAWING NO.
S-622

CDOT PROJECT D-1-209

DATE: 9/9/2022

REVISION NO.4

DOME NODE POINT COORDINATES

NODE INDICES (i, j)	NODE POINT COORDINATES [ft][2]			NODE AXIS VECTORS[3]		
	X	Y	Z	X	Y	Z
(1,1)	0	0	-0.166667	0	0	1
(1,2)	0	2.495367	-0.195362	0	0.042291	0.999105
(1,3)	0	4.988571	-0.281325	0	0.084441	0.996428
(1,4)	0	7.479153	-0.424522	0	0.12643	0.991975
(1,5)	0	9.965801	-0.624876	0	0.168196	0.985754
(1,6)	0	12.447207	-0.882285	0	0.209662	0.977774
(1,7)	0	14.92206	-1.196611	0	0.250795	0.96804
(1,8)	0	17.388682	-1.567575	0	0.29379	0.95587
(1,9)	0	19.844098	-1.994312	0	0.348675	0.937244
(1,10)	0	22.305945	-2.483463	0	0.301773	0.95338
(1,11)	0	24.743711	-3.024819	0	0.328385	0.944544
(1,12)	0	27.16843	-3.622142	0	0.354569	0.93503
(1,13)	0	29.578826	-4.275123	0	0.380284	0.92487
(1,14)	0	31.973638	-4.983429	0	0.405444	0.91412
(1,15)	0	34.351663	-5.746724	0	0.429656	0.902992
(1,16)	0	36.716388	-6.566932	0	0.42445	0.905452
(1,17)	0	39.060549	-7.440835	0	0.425916	0.904763
(1,18)	0	41.383319	-8.368166	0	0.43158	0.902075
(1,19)	0	43.683705	-9.34854	0	0.440023	0.897986
(1,20)	0	45.960627	-10.381495	0	0.450426	0.892814
(1,21)	0	48.212953	-11.466512	0	0.462343	0.886701
(1,22)	0	50.440563	-12.603586	0	0.469333	0.883021
(1,22.5)	0	53	-13.989987	0	0	1

DOME NODE POINT COORDINATES

NODE INDICES (i, j)	NODE POINT COORDINATES [ft][2]			NODE AXIS VECTORS[3]		
	X	Y	Z	X	Y	Z
(2,1)	4.957109	0	-0.231999	0.039222	0	0.999231
(2,2)	4.957601	2.498956	-0.260895	0.039215	0.042308	0.998335
(2,3)	4.95907	4.994549	-0.347307	0.039192	0.084467	0.995655
(2,4)	4.961518	7.487508	-0.491216	0.039154	0.126464	0.991198
(2,5)	4.964942	9.976516	-0.692547	0.0391	0.168237	0.984971
(2,6)	4.96934	12.460257	-0.951195	0.039032	0.209712	0.976984
(2,7)	4.974711	14.937416	-1.267027	0.038948	0.250851	0.967242
(2,8)	4.981053	17.406324	-1.639766	0.038842	0.293852	0.955061
(2,9)	4.988372	19.864005	-2.068653	0.038663	0.348738	0.936423
(2,10)	4.996612	22.328001	-2.560555	0.038759	0.301873	0.95256
(2,11)	5.005829	24.767786	-3.105262	0.038753	0.328498	0.943709
(2,12)	5.016003	27.194372	-3.706538	0.038752	0.354694	0.934179
(2,13)	5.027126	29.606462	-4.364074	0.038756	0.380422	0.924001
(2,14)	5.039194	32.002776	-5.077533	0.038767	0.405595	0.913231
(2,15)	5.0522	34.382091	-5.846576	0.038783	0.429821	0.902081
(2,16)	5.066142	36.747873	-6.673131	0.038775	0.42464	0.904531
(2,17)	5.081007	39.092838	-7.553972	0.038779	0.42613	0.903831
(2,18)	5.096786	41.416139	-8.48883	0.038804	0.431816	0.901127
(2,19)	5.113471	43.716762	-9.477315	0.03885	0.44028	0.89702
(2,20)	5.131051	45.993606	-10.518963	0.038917	0.450704	0.891825
(2,21)	5.14952	48.245517	-11.613252	0.039004	0.46264	0.885688
(2,22)	5.168871	50.471974	-12.759964	0.039062	0.469649	0.881988
(2,22.5)	5.190464	52.817011	-14.037868	0.030195	-0.001066	0.999543

DOME NODE POINT COORDINATES

NODE INDICES (i, j)	NODE POINT COORDINATES [ft][2]			NODE AXIS VECTORS[3]		
	X	Y	Z	X	Y	Z
(3,1)	9.911531	0	-0.421695	0.075449	0	0.99715
(3,2)	9.912501	2.502435	-0.451058	0.075436	0.042305	0.996253
(3,3)	9.915398	5.000324	-0.538722	0.075394	0.084451	0.993571
(3,4)	9.920222	7.495527	-0.68468	0.075324	0.126437	0.989111
(3,5)	9.926969	9.986699	-0.888856	0.075226	0.168199	0.982879
(3,6)	9.935637	12.4725	-1.151147	0.075101	0.209662	0.974885
(3,7)	9.946221	14.951583	-1.471415	0.074948	0.250792	0.965135
(3,8)	9.958717	17.422272	-1.849392	0.074753	0.293782	0.952945
(3,9)	9.973146	19.88156	-2.284502	0.074425	0.348648	0.934294
(3,10)	9.989413	22.346808	-2.783992	0.074594	0.301844	0.950435
(3,11)	10.007622	24.78745	-3.33765	0.074592	0.328472	0.941564
(3,12)	10.027732	27.214428	-3.949235	0.074602	0.354673	0.932009
(3,13)	10.049734	29.626385	-4.618421	0.074624	0.380408	0.921803
(3,14)	10.073615	32.021982	-5.344857	0.074659	0.405588	0.911002
(3,15)	10.099361	34.399938	-6.128189	0.074706	0.429825	0.899817
(3,16)	10.126974	36.763655	-6.970327	0.074686	0.424676	0.90226
(3,17)	10.156421	39.105796	-7.868022	0.074696	0.426191	0.901544
(3,18)	10.187684	41.425454	-8.820982	0.074749	0.431899	0.898819
(3,19)	10.220747	43.72156	-9.828793	0.074845	0.440384	0.894685
(3,20)	10.255592	45.992952	-10.890963	0.074984	0.450825	0.889457
(3,21)	10.2922	48.238422	-12.006944	0.075165	0.462779	0.883281
(3,22)	10.330521	50.455693	-13.175226	0.075284	0.469793	0.87956
(3,22.5)	10.363404	52.270513	-14.180862	0.058167	-0.006152	0.998288

DOME NODE POINT COORDINATES

NODE INDICES (i, j)	NODE POINT COORDINATES [ft][2]			NODE AXIS VECTORS[3]		
	X	Y	Z	X	Y	Z
(4,1)	14.859961	0	-0.726088	0.113302	0	0.993561
(4,2)	14.861391	2.505911	-0.756367	0.113282	0.042278	0.992663
(4,3)	14.86565	5.006058	-0.846613	0.113221	0.08439	0.989979
(4,4)	14.872741	7.503394	-0.996833	0.11312	0.126343	0.985516
(4,5)	14.882658	9.99651	-1.206949	0.112979	0.168073	0.979279
(4,6)	14.895397	12.483998	-1.476853	0.112797	0.209508	0.971279
(4,7)	14.910952	14.964448	-1.806403	0.112575	0.250611	0.96152
(4,8)	14.929317	17.436104	-2.195323	0.112293	0.293575	0.949318
(4,9)	14.950524	19.895856	-2.643109	0.111815	0.348404	0.930652
(4,10)	14.974445	22.360953	-3.157166	0.112054	0.301688	0.946799
(4,11)	15.001226	24.800773	-3.727264	0.11206	0.328314	0.937898
(4,12)	15.03081	27.226152	-4.357143	0.112085	0.354517	0.928307
(4,13)	15.063181	29.635645	-5.046455	0.11213	0.380255	0.918059
(4,14)	15.09832	32.027822	-5.794821	0.112195	0.405442	0.90721
(4,15)	15.136208	34.401314	-6.601855	0.112279	0.429687	0.89597
(4,16)	15.176846	36.75943	-7.469445	0.112246	0.424579	0.898406
(4,17)	15.220184	39.094752	-8.394293	0.112263	0.426124	0.897672
(4,18)	15.266193	41.406288	-9.376069	0.112346	0.431857	0.894918
(4,19)	15.314849	43.692881	-10.414315	0.112498	0.440361	0.890745
(4,20)	15.366122	45.953287	-11.508495	0.112715	0.45082	0.88547
(4,21)	15.419985	48.186212	-12.65801	0.112998	0.462788	0.879238
(4,22)	15.47621	50.385855	-13.857998	0.113183	0.469788	0.875494
(4,22.5)	15.502145	51.367713	-14.417084	0.086657	-0.015241	0.996122
(4.5,22)	20.069205	50.26427	-14.705806	-0.839201	0.205973	0.503306

DOME NODE POINT COORDINATES

NODE INDICES (i, j)	NODE POINT COORDINATES [ft][2]			NODE AXIS VECTORS[3]		
	X	Y	Z	X	Y	Z
(5,1)	19.801616	0	-1.135601	0.146294	0	0.989241
(5,2)	19.803481	2.509512	-1.167422	0.146272	0.042236	0.988342
(5,3)	19.809031	5.011945	-1.262104	0.146203	0.084299	0.985656
(5,4)	19.818267	7.511332	-1.419665	0.146089	0.126204	0.981188
(5,5)	19.831183	10.00614	-1.640023	0.14593	0.167891	0.974945
(5,6)	19.847774	12.49484	-1.92306	0.145725	0.209286	0.966935
(5,7)	19.868029	14.975901	-2.268622	0.145474	0.250355	0.957162
(5,8)	19.891942	17.447349	-2.676396	0.145153	0.293286	0.944941
(5,9)	19.919535	19.905836	-3.145636	0.144601	0.348068	0.92625
(5,10)	19.950643	22.368751	-3.683363	0.14485	0.301451	0.942415
(5,11)	19.985418	24.805412	-4.279289	0.144894	0.328073	0.933474
(5,12)	20.023799	27.226525	-4.937133	0.144965	0.354274	0.923837
(5,13)	20.065765	29.630534	-5.65651	0.145064	0.380014	0.913535
(5,14)	20.111291	32.015898	-6.437002	0.14519	0.405205	0.902623
(5,15)	20.160349	34.381138	-7.278179	0.145343	0.429457	0.891315
(5,16)	20.212949	36.729449	-8.181895	0.145291	0.424389	0.893747
(5,17)	20.269012	39.053315	-9.144785	0.145316	0.425963	0.892994
(5,18)	20.328501	41.351636	-10.166464	0.145437	0.431716	0.890207
(5,19)	20.391382	43.62315	-11.246414	0.145652	0.440236	0.88599
(5,20)	20.457615	45.86651	-12.384035	0.145959	0.450706	0.880659
(5,21)	20.527001	48.075449	-13.575888	0.146353	0.462651	0.874377
(5,21.5)	20.594777	50.119108	-14.743789	0.111574	-0.027385	0.993379

DOME NODE POINT COORDINATES

NODE INDICES (i, j)	NODE POINT COORDINATES [ft][2]			NODE AXIS VECTORS[3]		
	X	Y	Z	X	Y	Z
(6,1)	24.733709	0	-1.640345	0.183636	0	0.982994
(6,2)	24.735985	2.513352	-1.674514	0.183613	0.042164	0.982094
(6,3)	24.742746	5.018152	-1.775994	0.183542	0.084147	0.979404
(6,4)	24.753995	7.519511	-1.944822	0.183423	0.125977	0.974929
(6,5)	24.769725	10.015694	-2.180901	0.183256	0.167594	0.968674
(6,6)	24.789926	12.50497	-2.484097	0.183041	0.208927	0.960648
(6,7)	24.814587	14.985603	-2.854232	0.182779	0.249942	0.950853
(6,8)	24.843694	17.455199	-3.290898	0.18244	0.292823	0.9386
(6,9)	24.877224	19.909957	-3.792608	0.181838	0.347538	0.919866
(6,10)	24.91492	22.367851	-4.365179	0.182072	0.301056	0.936064
(6,11)	24.956921	24.798168	-4.998208	0.182171	0.327668	0.927064
(6,12)	25.003172	27.211465	-5.695385	0.182305	0.353864	0.917358
(6,13)	25.053643	29.606059	-6.456279	0.182473	0.379602	0.906976
(6,14)	25.108304	31.980286	-7.280421	0.182676	0.404797	0.895974
(6,15)	25.16712	34.332545	-8.167323	0.18291	0.429056	0.884565
(6,16)	25.23011	36.665904	-9.118796	0.182837	0.424035	0.886998
(6,17)	25.297164	38.972737	-10.131388	0.182872	0.425639	0.886222
(6,18)	25.368237	41.251825	-11.204643	0.183035	0.431411	0.883393
(6,19)	25.443283	43.50179	-12.337966	0.183323	0.439942	0.879115
(6,20)	25.522126	45.717768	-13.528745	0.183728	0.450394	0.873722
(6,21)	25.604019	47.88648	-14.765701	0.184239	0.462227	0.867411
(6,21.5)	25.628722	48.538645	-15.157325	0.138614	-0.043566	0.989388
(6.5,21)	27.70714	47.785697	-15.354338	-0.704404	0.269323	0.656719

DOME NODE POINT COORDINATES

NODE INDICES (i, j)	NODE POINT COORDINATES [ft][2]			NODE AXIS VECTORS[3]		
	X	Y	Z	X	Y	Z
(7,1)	29.657358	0	-2.231042	0.214354	0	0.976756
(7,2)	29.660008	2.517479	-2.268532	0.214337	0.042083	0.975853
(7,3)	29.667863	5.024725	-2.37966	0.214284	0.08398	0.973154
(7,4)	29.680928	7.527913	-2.564479	0.214195	0.125728	0.968666
(7,5)	29.699194	10.024993	-2.822871	0.214069	0.16727	0.96239
(7,6)	29.72265	12.513917	-3.154673	0.213907	0.208535	0.954336
(7,7)	29.75128	14.992635	-3.559669	0.213708	0.249493	0.944501
(7,8)	29.785055	17.458077	-4.037254	0.213446	0.29232	0.932196
(7,9)	29.823849	19.905697	-4.584543	0.212932	0.346961	0.913388
(7,10)	29.867283	22.354709	-5.205118	0.213042	0.300611	0.929648
(7,11)	29.915405	24.77441	-5.888383	0.213252	0.327208	0.920575
(7,12)	29.968196	27.175198	-6.637996	0.213503	0.353394	0.910785
(7,13)	30.025619	29.555258	-7.453466	0.213794	0.379126	0.900308
(7,14)	30.087636	31.912799	-8.334259	0.214125	0.404319	0.8892
(7,15)	30.154207	34.246089	-9.279817	0.214491	0.42858	0.877674
(7,16)	30.225371	36.558065	-10.291897	0.214387	0.423597	0.880116
(7,17)	30.300976	38.840986	-11.366942	0.214435	0.42522	0.879321
(7,18)	30.380967	41.093509	-12.504406	0.214649	0.431001	0.876449
(7,19)	30.465195	43.311757	-13.702247	0.215021	0.439519	0.872118
(7,20)	30.552686	45.476506	-14.946632	0.21553	0.449839	0.866713
(7,20.5)	30.600289	46.639901	-15.654142	0.161272	-0.061661	0.984982
(7.5,20)	33.733047	45.270988	-16.012325	-0.639699	0.287542	0.712815

DOME NODE POINT COORDINATES

NODE INDICES (i, j)	NODE POINT COORDINATES [ft][2]			NODE AXIS VECTORS[3]		
	X	Y	Z	X	Y	Z
(8,1)	34.571453	0	-2.898105	0.24376	0	0.969836
(8,2)	34.574406	2.521844	-2.940046	0.243756	0.041988	0.968927
(8,3)	34.583144	5.031536	-3.064106	0.243739	0.083784	0.966215
(8,4)	34.597672	7.536243	-3.270358	0.24371	0.125436	0.961702
(8,5)	34.617978	10.033444	-3.558651	0.243668	0.166889	0.955392
(8,6)	34.644049	12.520619	-3.928769	0.243613	0.208075	0.94729
(8,7)	34.675863	14.995247	-4.380431	0.243543	0.248965	0.937392
(8,8)	34.713368	17.453326	-4.912706	0.243439	0.291729	0.925004
(8,9)	34.756285	19.889232	-5.520551	0.243131	0.346284	0.906076
(8,10)	34.804073	22.324212	-6.204188	0.243023	0.300072	0.922441
(8,11)	34.856633	24.727644	-6.952717	0.243396	0.326646	0.913269
(8,12)	34.914	27.109763	-7.76976	0.243814	0.352815	0.90337
(8,13)	34.976135	29.468619	-8.654754	0.244276	0.378536	0.892771
(8,14)	35.042995	31.802287	-9.607086	0.244783	0.403723	0.881527
(8,15)	35.114532	34.108905	-10.626114	0.245326	0.427982	0.869854
(8,16)	35.190817	36.391274	-11.713532	0.245182	0.423027	0.872315
(8,17)	35.271645	38.641535	-12.865655	0.245245	0.42466	0.871503
(8,18)	35.356864	40.855942	-14.080514	0.24552	0.430425	0.868593
(8,19)	35.445359	43.011265	-15.342272	0.245979	0.438779	0.864273
(8,19.5)	35.504448	44.437938	-16.230297	0.182601	-0.082078	0.979755
(8.5,19)	38.888411	42.728042	-16.677701	-0.583139	0.300739	0.754655

DOME NODE POINT COORDINATES

NODE INDICES (i, j)	NODE POINT COORDINATES [ft][2]			NODE AXIS VECTORS[3]		
	X	Y	Z	X	Y	Z
(9,1)	39.476097	0	-3.632216	0.272376	0	0.962191
(9,2)	39.479222	2.526253	-3.679857	0.272392	0.041876	0.961275
(9,3)	39.488446	5.038202	-3.820485	0.272432	0.083553	0.95854
(9,4)	39.503776	7.543814	-4.054186	0.272496	0.125092	0.953991
(9,5)	39.525198	10.039883	-4.380751	0.272584	0.166439	0.947627
(9,6)	39.552693	12.523203	-4.799881	0.272694	0.207528	0.939452
(9,7)	39.586234	14.990566	-5.311181	0.272827	0.248334	0.92946
(9,8)	39.62574	17.436868	-5.913259	0.272972	0.291018	0.916949
(9,9)	39.670761	19.855133	-6.598213	0.273	0.345467	0.897844
(9,10)	39.72062	22.269377	-7.361873	0.272564	0.299398	0.914369
(9,11)	39.774995	24.649166	-8.192889	0.273162	0.325935	0.905068
(9,12)	39.834012	27.004552	-9.094847	0.273808	0.352075	0.895026
(9,13)	39.897628	29.333439	-10.067095	0.274503	0.377775	0.88427
(9,14)	39.965796	31.633752	-11.108925	0.275245	0.402947	0.872854
(9,15)	40.038467	33.903484	-12.219597	0.276024	0.427198	0.860995
(9,16)	40.115755	36.145289	-13.400739	0.275828	0.422259	0.863491
(9,17)	40.197255	38.347678	-14.646418	0.27591	0.423865	0.862677
(9,18)	40.281819	40.485785	-15.939229	0.276246	0.429431	0.859812
(9,18.5)	40.339266	41.947289	-16.881989	0.202651	-0.104512	0.973658
(9.5,18)	43.484521	40.156535	-17.350549	-0.535563	0.311167	0.785078

DOME NODE POINT COORDINATES

NODE INDICES (i, j)	NODE POINT COORDINATES [ft][2]			NODE AXIS VECTORS[3]		
	X	Y	Z	X	Y	Z
(10,1)	44.371658	0	-4.424177	0.301298	0	0.95353
(10,2)	44.374718	2.53034	-4.47884	0.30134	0.041736	0.952603
(10,3)	44.383734	5.044038	-4.639878	0.301456	0.083269	0.949837
(10,4)	44.398711	7.549477	-4.90738	0.301646	0.124668	0.945234
(10,5)	44.419632	10.042481	-5.28104	0.30191	0.165881	0.938794
(10,6)	44.446473	12.518872	-5.760416	0.302247	0.206846	0.930517
(10,7)	44.479202	14.974469	-6.344929	0.302655	0.247538	0.920394
(10,8)	44.517715	17.403073	-7.032642	0.303142	0.290112	0.907712
(10,9)	44.561447	19.79642	-7.812564	0.303641	0.34442	0.888356
(10,10)	44.60972	22.181471	-8.675547	0.302755	0.298503	0.905116
(10,11)	44.661917	24.528079	-9.609607	0.303653	0.324982	0.895646
(10,12)	44.718287	26.846059	-10.618299	0.304608	0.351074	0.885416
(10,13)	44.778788	29.133116	-11.700873	0.305619	0.376736	0.874452
(10,14)	44.843374	31.386971	-12.856514	0.306684	0.401879	0.862808
(10,15)	44.911999	33.605409	-14.084373	0.307788	0.426111	0.850703
(10,16)	44.984612	35.784309	-15.381875	0.307518	0.421127	0.853279
(10,17)	45.059834	37.892622	-16.726551	0.307608	0.422484	0.852575
(10,17.5)	45.104087	39.182018	-17.605537	0.221453	-0.128666	0.966645
(10.5,17)	47.686162	37.554656	-18.031345	-0.497265	0.320909	0.806068

DOME NODE POINT COORDINATES

NODE INDICES (i, j)	NODE POINT COORDINATES [ft][2]			NODE AXIS VECTORS[3]		
	X	Y	Z	X	Y	Z
(11,1)	49.258585	0	-5.26485	0.332927	0	0.942953
(11,2)	49.261198	2.533562	-5.327847	0.333002	0.041547	0.94201
(11,3)	49.268887	5.048051	-5.513135	0.333212	0.082885	0.939202
(11,4)	49.281653	7.551624	-5.820778	0.333558	0.124092	0.934527
(11,5)	49.299477	10.038766	-6.250307	0.334041	0.16512	0.927983
(11,6)	49.322332	12.503961	-6.801047	0.334659	0.205906	0.919569
(11,7)	49.35018	14.941693	-7.472114	0.335413	0.246424	0.909271
(11,8)	49.382924	17.344931	-8.261139	0.33633	0.288828	0.89636
(11,9)	49.420051	19.705196	-9.155219	0.337443	0.342936	0.876657
(11,10)	49.461166	22.050805	-10.140948	0.335954	0.2972	0.89376
(11,11)	49.505281	24.351829	-11.205529	0.33726	0.323584	0.884053
(11,12)	49.552815	26.617707	-12.352556	0.338648	0.349596	0.873556
(11,13)	49.603736	28.845788	-13.581228	0.340118	0.375193	0.862293
(11,14)	49.658007	31.033418	-14.890682	0.341666	0.400288	0.850314
(11,15)	49.715222	33.164922	-16.271045	0.343263	0.424389	0.837893
(11,16)	49.774758	35.221071	-17.701756	0.342857	0.419058	0.840738
(11,16.5)	49.799003	36.155654	-18.397401	0.239042	-0.154265	0.958677
(11.5,16)	51.581711	34.928079	-18.718603	-0.46749	0.331331	0.819556

DOME NODE POINT COORDINATES

NODE INDICES (i, j)	NODE POINT COORDINATES [ft][2]			NODE AXIS VECTORS[3]		
	X	Y	Z	X	Y	Z
(12,1)	54.137578	0	-6.145175	0.369653	0	0.92917
(12,2)	54.139178	2.535678	-6.217733	0.369766	0.04127	0.928208
(12,3)	54.143883	5.049753	-6.43089	0.370087	0.082326	0.925342
(12,4)	54.151691	7.549353	-6.784631	0.370618	0.123253	0.920571
(12,5)	54.162587	10.027172	-7.278226	0.371359	0.164	0.913891
(12,6)	54.176545	12.475912	-7.910629	0.372313	0.204506	0.905296
(12,7)	54.193537	14.888277	-8.680466	0.373481	0.244744	0.894769
(12,8)	54.213502	17.256922	-9.585406	0.374919	0.286865	0.881558
(12,9)	54.236209	19.577028	-10.615688	0.376812	0.340683	0.861364
(12,10)	54.261979	21.872044	-11.75817	0.374486	0.295213	0.878982
(12,11)	54.289349	24.111455	-12.999601	0.376396	0.321458	0.868902
(12,12)	54.318994	26.304122	-14.344304	0.378472	0.34736	0.857963
(12,13)	54.350913	28.446715	-15.792183	0.380718	0.372884	0.846175
(12,14)	54.384591	30.506413	-17.319978	0.383103	0.397677	0.833718
(12,15)	54.419286	32.460145	-18.893692	0.385527	0.421133	0.820984
(12,15.5)	54.425145	32.880739	-19.254301	0.253358	-0.179566	0.950561
(12.5,15)	55.354863	32.187493	-19.436692	-0.506245	0.390505	0.76891

DOME NODE POINT COORDINATES

NODE INDICES (i, j)	NODE POINT COORDINATES [ft][2]			NODE AXIS VECTORS[3]		
	X	Y	Z	X	Y	Z
(13,1)	59.042267	0	-7.066881	0.217707	0	0.976014
(13,2)	59.04225	2.537164	-7.150182	0.217808	0.041965	0.975089
(13,3)	59.042202	5.048771	-7.394477	0.218097	0.083767	0.972325
(13,4)	59.042122	7.539756	-7.79929	0.218576	0.12549	0.967717
(13,5)	59.04201	9.999965	-8.363026	0.219248	0.167106	0.961252
(13,6)	59.041865	12.419357	-9.083462	0.220115	0.208569	0.952916
(13,7)	59.041687	14.788037	-9.95775	0.221182	0.249872	0.942678
(13,8)	59.041466	17.097231	-10.982989	0.222511	0.293156	0.929811
(13,9)	59.041153	19.342494	-12.158907	0.224387	0.348084	0.910213
(13,9.5)[5]	59.041302	20.25	-12.7105	0.196094	0	0.980585
(13,10)[6]	59.028551	21.529183	-13.482745	0	0.30266	0.953099
(13,11)[6]	59.028551	23.619023	-14.949716	0	0.332191	0.943212
(13,12)[6]	59.028551	25.617634	-16.557213	0	0.362225	0.932091
(13,13)[6]	59.028551	27.502223	-18.287103	0	0.393981	0.919119
(13,14)[6]	59.028551	29.243559	-20.0851	0	0.427311	0.904105
(13,15)[6]	59.0286	29.3333	-20.1946	0	0	1

DOME NODE POINT COORDINATES

NODE INDICES (i, j)	NODE POINT COORDINATES [ft][2]			NODE AXIS VECTORS[3]		
	X	Y	Z	X	Y	Z
(14,1)	63.99999	0	-7.987319	0.172241	0	0.985055
(14,2)	63.999975	2.529693	-8.073596	0.172332	0.042058	0.984141
(14,3)	63.999931	5.034764	-8.327325	0.172595	0.083939	0.98141
(14,4)	63.999859	7.516523	-8.747636	0.173031	0.125757	0.976855
(14,5)	63.999756	9.963641	-9.332417	0.173645	0.167489	0.970461
(14,6)	63.999624	12.36499	-10.078757	0.174437	0.209097	0.962211
(14,7)	63.999461	14.709694	-10.982959	0.175414	0.250577	0.952072
(14,8)	63.999258	16.988131	-12.041744	0.176635	0.294077	0.939318
(14,9)	63.998961	19.188518	-13.262242	0.17842	0.349299	0.919868
(14,9.5)	63.999139	20.25	-13.977941	0.152567	0	0.988293

DOME NODE POINT COORDINATES

NODE INDICES (i, j)	NODE POINT COORDINATES [ft][2]			NODE AXIS VECTORS[3]		
	X	Y	Z	X	Y	Z
(15,1)	68.978222	0	-8.793216	0.121492	0	0.992592
(15,2)	68.978213	2.517766	-8.875112	0.121549	0.042153	0.99169
(15,3)	68.978185	5.016017	-9.117349	0.121716	0.08409	0.988996
(15,4)	68.978139	7.492984	-9.519085	0.121995	0.125966	0.984505
(15,5)	68.978073	9.938279	-10.078485	0.122386	0.16776	0.978202
(15,6)	68.977989	12.341677	-10.793015	0.122891	0.209436	0.970069
(15,7)	68.977885	14.69316	-11.65945	0.123514	0.250994	0.960076
(15,8)	68.977756	16.983722	-12.675182	0.124291	0.294591	0.947506
(15,9)	68.977563	19.196932	-13.855122	0.125451	0.350001	0.928311
(15,9.5)	68.97769	20.25	-14.565692	0.107076	0	0.994251

DOME NODE POINT COORDINATES

| NODE INDICES (i, j) | NODE POINT COORDINATES [ft][2] | | | NODE AXIS VECTORS[3] | | |
|

DOME I-DIRECTION MEMBER SIZES

BAR INDICES TI(i, j)	W1 [in]	W2 [in]	tf [in]	D1 [in]	D2 [in]	tw [in]
(1,1)	6.5	6.5	0.375	5.375	5.375	0.3125
(2,1)	6.5	6	0.375	5.375	5.625	0.3125
(3,1)	6	5.375	0.3125	5.625	5.875	0.3125
(4,1)	5.375	5.375	0.3125	5.875	5.875	0.3125
(5,1)	5.375	5.375	0.3125	5.875	5.625	0.3125
(6,1)	5.375	5.75	0.3125	5.625	5.625	0.3125
(7,1)	5.75	6	0.375	5.625	5.75	0.3125
(8,1)	6	5.875	0.375	5.75	6.375	0.3125
(9,1)	5.875	5.625	0.3125	6.375	6.875	0.375
(10,1)	5.625	5.75	0.3125	6.875	7.5	0.375
(11,1)	5.75	6.25	0.375	7.5	8.5	0.5
(12,1)	6.25	6.125	0.375	8.5	9.25	0.5
(13,1)	6.125	5.375	0.375	9.25	8.625	0.5
(14,1)	5.375	5	0.3125	8.625	6.75	0.5
(15,1)	5	5	0.3125	6.75	5.5	0.3125
(16,1)	5	5	0.3125	5.5	4.75	0.3125

DOME I-DIRECTION MEMBER SIZES

BAR INDICES TI(i, j)	W1 [in]	W2 [in]	tf [in]	D1 [in]	D2 [in]	tw [in]
(1,2)	6.5	6.5	0.375	5.375	5.375	0.3125
(2,2)	6.5	5.875	0.375	5.375	5.625	0.3125
(3,2)	5.875	5.5	0.3125	5.625	5.875	0.3125
(4,2)	5.5	5.5	0.3125	5.875	5.875	0.3125
(5,2)	5.5	5.5	0.3125	5.875	5.625	0.3125
(6,2)	5.5	6	0.3125	5.625	5.625	0.3125
(7,2)	6	6.375	0.375	5.625	5.875	0.3125
(8,2)	6.375	6.375	0.375	5.875	6.75	0.3125
(9,2)	6.375	6.375	0.375	6.75	7.375	0.375
(10,2)	6.375	6.875	0.375	7.375	7.75	0.375
(11,2)	6.875	7.5	0.5	7.75	8.25	0.5
(12,2)	7.5	7.125	0.5	8.25	8.5	0.5
(13,2)	7.125	5.875	0.375	8.5	8	0.5
(14,2)	5.875	5.25	0.3125	8	6.625	0.375
(15,2)	5.25	5	0.3125	6.625	5.625	0.3125
(16,2)	5	5	0.3125	5.625	4.75	0.3125

DOME I-DIRECTION MEMBER SIZES

BAR INDICES TI(i, j)	W1 [in]	W2 [in]	tf [in]	D1 [in]	D2 [in]	tw [in]
(1,3)	6	6	0.375	5.25	5.25	0.3125
(2,3)	6	5.625	0.3125	5.25	5.375	0.3125
(3,3)	5.625	5.625	0.3125	5.375	5.625	0.3125
(4,3)	5.625	5.625	0.3125	5.625	5.75	0.3125
(5,3)	5.625	5.75	0.3125	5.75	5.75	0.3125
(6,3)	5.75	6.25	0.375	5.75	5.75	0.3125
(7,3)	6.25	6.625	0.375	5.75	6	0.3125
(8,3)	6.625	6.75	0.375	6	7	0.375
(9,3)	6.75	7.25	0.375	7	7.75	0.375
(10,3)	7.25	8.5	0.5	7.75	8.125	0.5
(11,3)	8.5	9.25	0.5	8.125	8.375	0.5
(12,3)	9.25	8.375	0.5	8.375	8.375	0.5
(13,3)	8.375	6.625	0.5	8.375	7.875	0.5
(14,3)	6.625	5.5	0.3125	7.875	6.875	0.375
(15,3)	5.5	5.125	0.3125	6.875	6	0.3125
(16,3)	5.125	5	0.3125	6	4.75	0.3125

DOME I-DIRECTION MEMBER SIZES

BAR INDICES TI(i, j)	W1 [in]	W2 [in]	tf [in]	D1 [in]	D2 [in]	tw [in]
(1,4)	5.875	5.875	0.375	5.375	5.375	0.3125
(2,4)	5.875	5.875	0.3125	5.375	5.375	0.3125
(3,4)	5.875	5.875	0.3125	5.375	5.375	0.3125
(4,4)	5.875	5.875	0.375	5.375	5.5	0.3125
(5,4)	5.875	6.125	0.375	5.5	5.375	0.3125
(6,4)	6.125	6.375	0.375	5.375	5.375	0.3125
(7,4)	6.375	6.625	0.375	5.375	5.875	0.3125
(8,4)	6.625	6.875	0.375	5.875	6.75	0.3125
(9,4)	6.875	7.75	0.5	6.75	7.5	0.375
(10,4)	7.75	9	0.5	7.5	8.25	0.5
(11,4)	9	9.5	0.625	8.25	9.375	0.5
(12,4)	9.5	8.875	0.625	9.375	10	0.5
(13,4)	8.875	7.5	0.5	10	9.375	0.5
(14,4)	7.5	6.375	0.375	9.375	7.875	0.5
(15,4)	6.375	5.875	0.375	7.875	6.5	0.375
(16,4)	5.875	5.75	0.375	6.5	4.75	0.3125

DOME I-DIRECTION MEMBER SIZES

BAR INDICES TI(i, j)	W1 [in]	W2 [in]	tf [in]	D1 [in]	D2 [in]	tw [in]
(1,5)	5.875	5.875	0.3125	5.25	5.25	0.3125
(2,5)	5.875	6	0.375	5.25	5.25	0.3125
(3,5)	6	6	0.375	5.25	5.5	0.3125
(4,5)	6	6	0.375	5.5	5.5	0.3125
(5,5)	6	6.25	0.375	5.5	5.5	0.3125
(6,5)	6.25	6.75	0.375	5.5	5.5	0.3125
(7,5)	6.75	7.375	0.375	5.5	6	0.3125
(8,5)	7.375	8	0.5	6	7	0.3125
(9,5)	8	8.875	0.5	7	7.875	0.375
(10,5)	8.875	9.5	0.625	7.875	9.125	0.5
(11,5)	9.5	9.375	0.625	9.125	10.625	0.5
(12,5)	9.375	8.625	0.625	10.625	11.125	0.625
(13,5)	8.625	7.25	0.5	11.125	10	0.625
(14,5)	7.25	6.25	0.375	10	8	0.5
(15,5)	6.25	6.125	0.375	8	6.75	0.375
(16,5)	6.125	6.25	0.375	6.75	4.75	0.3125

DOME I-DIRECTION MEMBER SIZES

BAR INDICES TI(i, j)	W1 [in]	W2 [in]	tf [in]	D1 [in]	D2 [in]	tw [in]
(1,6)	5.75	5.75	0.3125	5.25	5.25	0.3125
(2,6)	5.75	6	0.375	5.25	5.5	0.3125
(3,6)	6	6	0.375	5.5	6	0.3125
(4,6)	6	6	0.3125	6	6.125	0.3125
(5,6)	6	6.25	0.3125	6.125	6.125	0.3125
(6,6)	6.25	7	0.375	6.125	6.125	0.3125
(7,6)	7	8.125	0.5	6.125	6.5	0.3125
(8,6)	8.125	9.125	0.5	6.5	7.75	0.375
(9,6)	9.125	10	0.625	7.75	9.25	0.5
(10,6)	10	10.375	0.625	9.25	11	0.5
(11,6)	10.375	10	0.625	11	12.625	0.625
(12,6)	10	9	0.625	12.625	13	0.75
(13,6)	9	7.5	0.5	13	11.375	0.625
(14,6)	7.5	6.25	0.375	11.375	8.875	0.5
(15,6)	6.25	5.875	0.3125	8.875	7	0.375
(16,6)	5.875	6	0.375	7	4.75	0.375

DOME I-DIRECTION MEMBER SIZES

BAR INDICES TI(i, j)	W1 [in]	W2 [in]	tf [in]	D1 [in]	D2 [in]	tw [in]
(1,7)	5.5	5.5	0.3125	5.375	5.375	0.3125
(2,7)	5.5	5.75	0.3125	5.375	5.625	0.3125
(3,7)	5.75	5.75	0.375	5.625	6	0.3125
(4,7)	5.75	5.75	0.3125	6	6.375	0.3125
(5,7)	5.75	6	0.3125	6.375	6.625	0.375
(6,7)	6	7.25	0.375	6.625	6.625	0.375
(7,7)	7.25	8.75	0.5	6.625	7.125	0.375
(8,7)	8.75	10	0.625	7.125	8.75	0.5
(9,7)	10	10.625	0.625	8.75	10.625	0.5
(10,7)	10.625	10.875	0.625	10.625	12.75	0.625
(11,7)	10.875	10.875	0.625	12.75	14.625	0.75
(12,7)	10.875	10.125	0.75	14.625	14.875	1
(13,7)	10.125	8.5	0.625	14.875	13	0.75
(14,7)	8.5	7.25	0.5	13	10.375	0.625
(15,7)	7.25	6.75	0.375	10.375	7.5	0.5
(16,7)	6.75	6.5	0.375	7.5	4.75	0.5

DOME I-DIRECTION MEMBER SIZES

BAR INDICES TI(i, j)	W1 [in]	W2 [in]	tf [in]	D1 [in]	D2 [in]	tw [in]
(1,8)	5.375	5.375	0.3125	5.375	5.375	0.3125
(2,8)	5.375	5.625	0.3125	5.375	5.625	0.3125
(3,8)	5.625	5.625	0.3125	5.625	5.875	0.3125
(4,8)	5.625	5.5	0.3125	5.875	6.25	0.3125
(5,8)	5.5	5.75	0.3125	6.25	6.375	0.3125
(6,8)	5.75	6.625	0.375	6.375	6.25	0.3125
(7,8)	6.625	7.875	0.5	6.25	6.625	0.3125
(8,8)	7.875	9.25	0.5	6.625	8	0.375
(9,8)	9.25	10.25	0.75	8	10.25	0.625
(10,8)	10.25	10.75	0.625	10.25	12.75	0.625
(11,8)	10.75	11.5	0.75	12.75	15	0.75
(12,8)	11.5	11.375	1	15	15.125	1
(13,8)	11.375	10.375	0.625	15.125	12.625	0.75
(14,8)	10.375	9.125	0.625	12.625	9.75	0.625
(15,8)	9.125	7.75	0.5	9.75	7.5	0.5
(16,8)	7.75	7.25	0.5	7.5	5	0.375

DOME I-DIRECTION MEMBER SIZES

BAR INDICES TI(i, j)	W1 [in]	W2 [in]	tf [in]	D1 [in]	D2 [in]	tw [in]
(1,9)	5.125	5.125	0.3125	5.25	5.25	0.3125
(2,9)	5.125	5.375	0.3125	5.25	5.375	0.3125
(3,9)	5.375	5.5	0.3125	5.375	5.625	0.3125
(4,9)	5.5	5.75	0.3125	5.625	5.875	0.3125
(5,9)	5.75	6.375	0.375	5.875	5.875	0.3125
(6,9)	6.375	7	0.375	5.875	5.75	0.3125
(7,9)	7	7.5	0.5	5.75	6.125	0.3125
(8,9)	7.5	8.375	0.5	6.125	7.25	0.375
(9,9)	8.375	9.375	0.5	7.25	9.25	0.5
(10,9)	9.375	10.125	0.625	9.25	12	0.625
(11,9)	10.125	11.25	0.625	12	14.75	0.75
(12,9)	11.25	12.25	1	14.75	15.5	1
(13,9)	12.25	12.5	0.75	15.5	13.5	0.75
(14,9)	12.5	11.5	0.75	13.5	10.5	0.625
(15,9)	11.5	9.625	0.625	10.5	8	0.5
(16,9)	9.625	8.75	0.5	8	5	0.375

DOME I-DIRECTION MEMBER SIZES

BAR INDICES TI(i, j)	W1 [in]	W2 [in]	tf [in]	D1 [in]	D2 [in]	tw [in]
(1,10)	5	5	0.3125	5.25	5.25	0.3125
(2,10)	5	5.125	0.3125	5.25	5.25	0.3125
(3,10)	5.125	5.375	0.3125	5.25	5.5	0.3125
(4,10)	5.375	5.875	0.3125	5.5	5.5	0.3125
(5,10)	5.875	6.625	0.375	5.5	5.375	0.3125
(6,10)	6.625	7.25	0.5	5.375	5.375	0.3125
(7,10)	7.25	7.25	0.5	5.375	5.625	0.3125
(8,10)	7.25	7.625	0.5	5.625	6.25	0.3125
(9,10)	7.625	8.25	0.5	6.25	7.625	0.375
(10,10)	8.25	8.875	0.5	7.625	9.625	0.5
(11,10)	8.875	9.625	0.625	9.625	11.625	0.625
(12,10)	9.625	10	0.625	11.625	12.5	0.625

DOME I-DIRECTION MEMBER SIZES

BAR INDICES TI(i, j)	W1 [in]	W2 [in]	tf [in]	D1 [in]	D2 [in]	tw [in]
(1,11)	5.125	5.125	0.3125	5.25	5.25	0.3125
(2,11)	5.125	5.5	0.3125	5.25	5.25	0.3125
(3,11)	5.5	5.5	0.3125	5.25	5.25	0.3125
(4,11)	5.5	6.125	0.3125	5.25	5.25	0.3125
(5,11)	6.125	6.75	0.375	5.25	5.25	0.3125
(6,11)	6.75	7.25	0.5	5.25	5.25	0.3125
(7,11)	7.25	7.25	0.5	5.25	5.375	0.3125
(8,11)	7.25	7.375	0.5	5.375	5.75	0.3125
(9,11)	7.375	7.625	0.5	5.75	6.5	0.3125
(10,11)	7.625	8	0.5	6.5	7.625	0.375
(11,11)	8	8.375	0.5	7.625	8.75	0.5
(12,11)	8.375	8.5	0.5	8.75	9.25	0.5

DOME I-DIRECTION MEMBER SIZES

BAR INDICES TI(i, j)	W1 [in]	W2 [in]	tf [in]	D1 [in]	D2 [in]	tw [in]
(1,12)	5.25	5.25	0.3125	5.25	5.25	0.3125
(2,12)	5.25	5.375	0.3125	5.25	5.25	0.3125
(3,12)	5.375	5.75	0.3125	5.25	5.25	0.3125
(4,12)	5.75	6.375	0.375	5.25	5.25	0.3125
(5,12)	6.375	7	0.375	5.25	5.25	0.3125
(6,12)	7	7.25	0.5	5.25	5.25	0.3125
(7,12)	7.25	7.375	0.5	5.25	5.375	0.3125
(8,12)	7.375	7.625	0.5	5.375	5.75	0.3125
(9,12)	7.625	7.875	0.5	5.75	6.375	0.3125
(10,12)	7.875	7.875	0.5	6.375	7.125	0.375
(11,12)	7.875	8.125	0.5	7.125	7.75	0.375
(12,12)	8.125	8.25	0.5	7.75	8	0.5

DOME I-DIRECTION MEMBER SIZES

BAR INDICES TI(i, j)	W1 [in]	W2 [in]	tf [in]	D1 [in]	D2 [in]	tw [in]
(1,13)	5.625	5.625	0.3125	5.25	5.25	0.3125
(2,13)	5.625	5.625	0.3125	5.25	5.25	0.3125
(3,13)	5.625	5.625	0.3125	5.25	5.25	0.3125
(4,13)	5.625	6.125	0.3125	5.25	5.25	0.3125
(5,13)	6.125	6.875	0.375	5.25	5.25	0.3125
(6,13)	6.875	7.25	0.5	5.25	5.25	0.3125
(7,13)	7.25	7.5	0.5	5.25	5.375	0.3125
(8,13)	7.5	7.5	0.5	5.375	5.875	0.3125
(9,13)	7.5	7.625	0.5	5.875	7	0.3125
(10,13)	7.625	7.875	0.5	7	8.25	0.375
(11,13)	7.875	8.375	0.5	8.25	8.875	0.5
(12,13)	8.375	8.75	0.5	8.875	9	0.5

DOME I-DIRECTION MEMBER SIZES

BAR INDICES TI(i, j)	W1 [in]	W2 [in]	tf [in]	D1 [in]	D2 [in]	tw [in]
(1,14)	6	6	0.375	5.375	5.375	0.3125
(2,14)	6	6	0.375	5.375	5.5	0.3125
(3,14)	6	6	0.3125	5.5	5.375	0.3125
(4,14)	6	6.375	0.375	5.375	5.25	0.3125
(5,14)	6.375	6.75	0.375	5.25	5.25	0.3125
(6,14)	6.75	6.625	0.375	5.25	5.25	0.3125
(7,14)	6.625	6.5	0.375	5.25	5.5	0.3125
(8,14)	6.5	6.5	0.375	5.5	6.125	0.3125
(9,14)	6.5	6.5	0.375	6.125	7	0.375
(10,14)	6.5	7	0.375	7	8	0.375
(11,14)	7	8	0.5	8	8.75	0.5
(12,14)	8	8.75	0.625	8.75	9	0.5

DOME I-DIRECTION MEMBER SIZES

BAR INDICES TI(i, j)	W1 [in]	W2 [in]	tf [in]	D1 [in]	D2 [in]	tw [in]
(1,15)	6.5	6.5	0.375	5.625	5.625	0.3125
(2,15)	6.5	6.5	0.375	5.625	5.75	0.3125
(3,15)	6.5	6.5	0.375	5.75	5.625	0.3125
(4,15)	6.5	6.5	0.375	5.625	5.375	0.3125
(5,15)	6.5	6.25	0.375	5.375	5.375	0.3125
(6,15)	6.25	6	0.375	5.375	5.375	0.3125
(7,15)	6	6	0.375	5.375	5.375	0.3125
(8,15)	6	6	0.375	5.375	5.875	0.3125
(9,15)	6	6	0.3125	5.875	6.5	0.3125
(10,15)	6	6	0.3125	6.5	7.125	0.375
(11,15)	6	6.375	0.375	7.125	6.75	0.375
(12,15)	6.375	6.75	0.375	6.75	6	0.5

DOME I-DIRECTION MEMBER SIZES

BAR INDICES TI(i, j)	W1 [in]	W2 [in]	tf [in]	D1 [in]	D2 [in]	tw [in]
(1,16)	6.875	6.875	0.5	5.5	5.5	0.3125
(2,16)	6.875	6.625	0.375	5.5	5.625	0.3125
(3,16)	6.625	6.5	0.375	5.625	5.625	0.3125
(4,16)	6.5	6.375	0.375	5.625	5.375	0.3125
(5,16)	6.375	6	0.375	5.375	5.25	0.3125
(6,16)	6	5.625	0.3125	5.25	5.25	0.3125
(7,16)	5.625	5.5	0.3125	5.25	5.25	0.3125
(8,16)	5.5	5.25	0.3125	5.25	5.375	0.3125
(9,16)	5.25	5.25	0.3125	5.375	5.625	0.3125
(10,16)	5.25	5.25	0.3125	5.625	5.875	0.3125
(11,16)	5.25	5.5	0.3125	5.875	6	0.3125

DOME I-DIRECTION MEMBER SIZES

BAR INDICES TI(i, j)	W1 [in]	W2 [in]	tf [in]	D1 [in]	D2 [in]	tw [in]
(1,17)	7.125	7.125	0.5	5.5	5.5	0.3125
(2,17)	7.125	6.875	0.5	5.5	5.5	0.3125
(3,17)	6.875	6.625	0.375	5.5	5.375	0.3125
(4,17)	6.625	6.375	0.375	5.375	5.25	0.3125
(5,17)	6.375	5.875	0.375	5.25	5.25	0.3125
(6,17)	5.875	5.375	0.3125	5.25	5.25	0.3125
(7,17)	5.375	5.125	0.3125	5.25	5.25	0.3125
(8,17)	5.125	5	0.3125	5.25	5.375	0.3125
(9,17)	5	5	0.3125	5.375	5.5	0.3125
(10,17)	5	5	0.3125	5.5	5.5	0.3125

DOME I-DIRECTION MEMBER SIZES

BAR INDICES TI(i, j)	W1 [in]	W2 [in]	tf [in]	D1 [in]	D2 [in]	tw [in]
(1,18)	7.375	7.375	0.5	5.5	5.5	0.3125
(2,18)	7.375	7	0.5	5.5	5.5	0.3125
(3,18)	7	6.625	0.375	5.5	5.375	0.3125
(4,18)	6.625	6.375	0.375	5.375	5.25	0.3125
(5,18)	6.375	5.875	0.375	5.25	5.25	0.3125
(6,18)	5.875	5.375	0.3125	5.25	5.25	0.3125
(7,18)	5.375	5.125	0.3125	5.25	5.25	0.3125
(8,18)	5.125	5	0.3125	5.25	5.25	0.3125
(9,18)	5	5	0.3125	5.25	5.25	0.3125

DOME I-DIRECTION MEMBER SIZES

BAR INDICES TI(i, j)	W1 [in]	W2 [in]	tf [in]	D1 [in]	D2 [in]	tw [in]
(1,19)	7.375	7.375	0.5	5.25	5.25	0.3125
(2,19)	7.375	7	0.5	5.25	5.25	0.3125
(3,19)	7	6.5	0.375	5.25	5.25	0.3125
(4,19)	6.5	6	0.375	5.25	5.25	0.3125
(5,19)	6	5.5	0.3125	5.25	5.25	0.3125
(6,19)	5.5	5.125	0.3125	5.25	5.25	0.3125
(7,19)	5.125	5	0.3125	5.25	5.25	0.3125
(8,19)	5	5	0.3125	5.25	5.25	0.3125

DOME I-DIRECTION MEMBER SIZES

BAR INDICES TI(i, j)	W1 [in]	W2 [in]	tf [in]	D1 [in]	D2 [in]	tw [in]
(1,20)	6.875	6.875	0.375	5.25	5.25	0.3125
(2,20)	6.875	6.375	0.375	5.25	5.25	0.3125
(3,20)	6.375	5.625	0.375	5.25	5.25	0.3125
(4,20)	5.625	5.25	0.3125	5.25	5.25	0.3125
(5,20)	5.25	5.25	0.3125	5.25	5.25	0.3125
(6,20)	5.25	5.25	0.3125	5.25	5.25	0.3125
(7,20)	5.25	5.25	0.3125	5.25	5.25	0.3125

DOME I-DIRECTION MEMBER SIZES

BAR INDICES TI(i, j)	W1 [in]	W2 [in]	tf [in]	D1 [in]	D2 [in]	tw [in]
(1,21)	6.375	6.375	0.375	5.25	5.25	0.3125
(2,21)	6.375	6	0.375	5.25	5.25	0.3125
(3,21)	6	5.625	0.3125	5.25	5.25	0.3125
(4,21)	5.625	5.5	0.3125	5.25	5.25	0.3125
(5,21)	5.5	5.5	0.3125	5.25	5.25	0.3125
(6,21)	5.625	5.75	0.3125	5.375	5.5	0.3125

DOME I-DIRECTION MEMBER SIZES

BAR INDICES TI(i, j)	W1 [in]	W2 [in]	tf [in]	D1 [in]	D2 [in]	tw [in]
(1,22)	6	6	0.375	5.25	5.25	0.3125
(2,22)	6	6	0.375	5.25	5.25	0.3125
(3,22)	6	6	0.375	5.25	5.375	0.3125
(4,22)	6	6	0.375	5.375	5.5	0.3125

NOTES:

1. REFER TO DETAILS 1 & 2 ON S-622 FOR DOME CANOPY KEY PLAN INDICATING MEMBER INDICES AS SHOWN ON THESE SCHEDULES.
2. REFER TO DETAILS 3 & 4 ON S-622 FOR DOME CANOPY BUILT-UP TEE SECTION PLATE DIMENSION KEY DIAGRAMS.
3. COORDINATE TEE SECTIONS WITH SUPPORT OF HANGING CLOCK ELEMENT. AT POINTS OF ANCHORAGE OF CLOCK SUPPORT STRUCTURE, "tw" SHALL BE MINIMUM OF 3/4" FOR THAT MEMBER.

DESIGN BY:										
DRAWN BY:										
CHECKED BY:		4	7/3/2023	ISSUED FOR BID						
APPROVED BY:		1	11/4/2022	ISSUED FOR PERMIT REVISION 1						
CDOT/APPROVED BY:		0	9/9/2022	ISSUED FOR PERMIT	MC	MW	BY			
		NO.	DATE	REVISIONS	DES.	DRW.	CHK.	DCCO	CDOT	

TranSystems
TRANSYSTEMS
222 SOUTH RIVERSIDE PLAZA SUITE 610
CHICAGO, ILLINOIS 60606

SOM
SKIDMORE, OWINGS & MERRILL LLP
224 SOUTH MICHIGAN AVENUE, SUITE 1000
CHICAGO, ILLINOIS 60604

CDOT
CHICAGO DEPARTMENT OF TRANSPORTATION
DIVISION OF ENGINEERING

STATE / LAKE LOOP ELEVATED STATION
200 NORTH STATE STREET, CHICAGO, IL 60601

SPEC. NO.

DOME CANOPY I-DIRECTION MEMBER SCHEDULES

DRAWING NO.
S-624

CDOT PROJECT D-1-209 | DATE: 9/9/2022 | REVISION NO.4

DOME J-DIRECTION MEMBER SIZES

BAR INDICES TJ(i, j)	W1 [in]	W2 [in]	tf [in]	D1 [in]	D2 [in]	tw [in]
(1,1)	6.75	6.75	0.375	5.25	5.25	0.3125
(1,2)	6.75	6.625	0.375	5.25	5.25	0.3125
(1,3)	6.625	6.25	0.375	5.25	5.25	0.3125
(1,4)	6.25	5.75	0.375	5.25	5.25	0.3125
(1,5)	5.75	5.25	0.3125	5.25	5.25	0.3125
(1,6)	5.25	5	0.3125	5.25	5.25	0.3125
(1,7)	5	5	0.3125	5.25	5.25	0.3125
(1,8)	5	5	0.3125	5.25	5.25	0.3125
(1,9)	5	5	0.3125	5.25	5.25	0.3125
(1,10)	5	5	0.3125	5.25	5.25	0.3125
(1,11)	5	5	0.3125	5.25	5.25	0.3125
(1,12)	5	5	0.3125	5.25	5.25	0.3125
(1,13)	5	5.125	0.3125	5.25	5.25	0.3125
(1,14)	5.125	5.625	0.3125	5.25	5.25	0.3125
(1,15)	5.625	6.5	0.375	5.25	5.5	0.3125
(1,16)	6.5	7.25	0.375	5.5	5.75	0.3125
(1,17)	7.25	7.625	0.5	5.75	5.875	0.3125
(1,18)	7.625	7.75	0.5	5.875	6.125	0.3125
(1,19)	7.75	7.5	0.5	6.125	6.375	0.3125
(1,20)	7.5	6.875	0.5	6.375	6.75	0.375
(1,21)	6.875	6.125	0.375	6.75	6.5	0.375
(1,22)	6.125	5.625	0.3125	6.5	6	0.5

DOME J-DIRECTION MEMBER SIZES

BAR INDICES TJ(i, j)	W1 [in]	W2 [in]	tf [in]	D1 [in]	D2 [in]	tw [in]
(2,1)	6.5	6.5	0.375	5.25	5.25	0.3125
(2,2)	6.5	6.375	0.375	5.25	5.25	0.3125
(2,3)	6.375	6.25	0.375	5.25	5.25	0.3125
(2,4)	6.25	6	0.375	5.25	5.25	0.3125
(2,5)	6	5.5	0.3125	5.25	5.25	0.3125
(2,6)	5.5	5.125	0.3125	5.25	5.25	0.3125
(2,7)	5.125	5	0.3125	5.25	5.25	0.3125
(2,8)	5	5	0.3125	5.25	5.25	0.3125
(2,9)	5	5	0.3125	5.25	5.25	0.3125
(2,10)	5	5	0.3125	5.25	5.25	0.3125
(2,11)	5	5	0.3125	5.25	5.25	0.3125
(2,12)	5	5	0.3125	5.25	5.25	0.3125
(2,13)	5	5.25	0.3125	5.25	5.25	0.3125
(2,14)	5.25	5.75	0.3125	5.25	5.375	0.3125
(2,15)	5.75	6.5	0.375	5.375	5.625	0.3125
(2,16)	6.5	7.25	0.375	5.625	5.875	0.3125
(2,17)	7.25	7.625	0.5	5.875	6	0.3125
(2,18)	7.625	7.75	0.5	6	6.125	0.3125
(2,19)	7.75	7.5	0.5	6.125	6.375	0.3125
(2,20)	7.5	6.75	0.5	6.375	6.75	0.375
(2,21)	6.75	5.875	0.375	6.75	6.5	0.375
(2,22)	5.875	5.375	0.3125	6.5	6	0.5

DOME J-DIRECTION MEMBER SIZES

BAR INDICES TJ(i, j)	W1 [in]	W2 [in]	tf [in]	D1 [in]	D2 [in]	tw [in]
(3,1)	6	6	0.375	5.375	5.375	0.3125
(3,2)	6	6	0.375	5.375	5.5	0.3125
(3,3)	6	6	0.375	5.5	5.5	0.3125
(3,4)	6	6	0.375	5.5	5.5	0.3125
(3,5)	6	5.75	0.375	5.5	5.5	0.3125
(3,6)	5.75	5.375	0.3125	5.5	5.5	0.3125
(3,7)	5.375	5.25	0.3125	5.5	5.375	0.3125
(3,8)	5.25	5.125	0.3125	5.375	5.25	0.3125
(3,9)	5.125	5	0.3125	5.25	5.25	0.3125
(3,10)	5	5	0.3125	5.25	5.25	0.3125
(3,11)	5	5	0.3125	5.25	5.375	0.3125
(3,12)	5	5	0.3125	5.375	5.625	0.3125
(3,13)	5	5.25	0.3125	5.625	5.75	0.3125
(3,14)	5.25	5.875	0.3125	5.75	5.875	0.3125
(3,15)	5.875	6.5	0.375	5.875	6.125	0.3125
(3,16)	6.5	6.875	0.375	6.125	6.375	0.3125
(3,17)	6.875	7.125	0.5	6.375	6.375	0.3125
(3,18)	7.125	7.125	0.5	6.375	6.125	0.3125
(3,19)	7.125	6.75	0.5	6.125	6.25	0.3125
(3,20)	6.75	6.125	0.375	6.25	6.25	0.3125
(3,21)	6.125	5.5	0.3125	6.25	6.25	0.3125
(3,22)	5.5	5.25	0.3125	6.25	6	0.375

DOME J-DIRECTION MEMBER SIZES

BAR INDICES TJ(i, j)	W1 [in]	W2 [in]	tf [in]	D1 [in]	D2 [in]	tw [in]
(4,1)	6	6	0.375	5.5	5.5	0.3125
(4,2)	6	6	0.375	5.5	5.5	0.3125
(4,3)	6	6	0.375	5.5	5.5	0.3125
(4,4)	6	5.875	0.375	5.5	5.5	0.3125
(4,5)	5.875	5.625	0.3125	5.5	5.5	0.3125
(4,6)	5.625	5.375	0.3125	5.5	5.5	0.3125
(4,7)	5.375	5.25	0.3125	5.5	5.375	0.3125
(4,8)	5.25	5.125	0.3125	5.375	5.25	0.3125
(4,9)	5.125	5	0.3125	5.25	5.25	0.3125
(4,10)	5	5	0.3125	5.25	5.375	0.3125
(4,11)	5	5	0.3125	5.375	5.625	0.3125
(4,12)	5	5.125	0.3125	5.625	5.875	0.3125
(4,13)	5.125	5.375	0.3125	5.875	6.125	0.3125
(4,14)	5.375	5.75	0.3125	6.125	6.25	0.3125
(4,15)	5.75	6	0.375	6.25	6.25	0.3125
(4,16)	6	6.375	0.375	6.25	6.375	0.3125
(4,17)	6.375	6.375	0.375	6.375	6.5	0.375
(4,18)	6.375	6.375	0.375	6.5	6.375	0.375
(4,19)	6.375	6	0.375	6.375	6	0.3125
(4,20)	6	5.625	0.3125	6	5.75	0.3125
(4,21)	5.625	5.5	0.3125	5.75	5.875	0.3125
(4,22)	5.5	5.5	0.3125	5.875	6	0.3125

DOME J-DIRECTION MEMBER SIZES

BAR INDICES TJ(i, j)	W1 [in]	W2 [in]	tf [in]	D1 [in]	D2 [in]	tw [in]
(5,1)	6.25	6.25	0.375	5.5	5.5	0.3125
(5,2)	6.25	6.25	0.375	5.5	5.5	0.3125
(5,3)	6.25	6.25	0.375	5.5	5.5	0.3125
(5,4)	6.25	6	0.375	5.5	5.5	0.3125
(5,5)	6	5.625	0.3125	5.5	5.5	0.3125
(5,6)	5.625	5.375	0.3125	5.5	5.5	0.3125
(5,7)	5.375	5.375	0.3125	5.5	5.5	0.3125
(5,8)	5.375	5.375	0.3125	5.5	5.5	0.3125
(5,9)	5.375	5.5	0.3125	5.5	5.5	0.3125
(5,10)	5.5	5.5	0.3125	5.5	5.75	0.3125
(5,11)	5.5	5.625	0.3125	5.75	6.125	0.3125
(5,12)	5.625	6	0.3125	6.125	6.25	0.3125
(5,13)	6	6.375	0.375	6.25	6.375	0.3125
(5,14)	6.375	6.375	0.375	6.375	6.5	0.375
(5,15)	6.375	6.125	0.375	6.5	6.625	0.375
(5,16)	6.125	6	0.375	6.625	6.875	0.375
(5,17)	6	5.875	0.375	6.875	7	0.375
(5,18)	5.875	5.5	0.3125	7	6.875	0.375
(5,19)	5.5	5.5	0.3125	6.875	6.375	0.375
(5,20)	5.5	5.5	0.3125	6.375	5.75	0.3125
(5,21)	5.5	5.75	0.3125	5.75	5.5	0.3125

DOME J-DIRECTION MEMBER SIZES

BAR INDICES TJ(i, j)	W1 [in]	W2 [in]	tf [in]	D1 [in]	D2 [in]	tw [in]
(6,1)	6	6	0.375	5.5	5.5	0.3125
(6,2)	6	6.125	0.375	5.5	5.5	0.3125
(6,3)	6.125	6.125	0.375	5.5	5.625	0.3125
(6,4)	6.125	5.875	0.375	5.625	5.75	0.3125
(6,5)	5.875	5.875	0.375	5.75	5.75	0.3125
(6,6)	5.875	5.875	0.3125	5.75	5.75	0.3125
(6,7)	5.875	5.875	0.3125	5.75	5.75	0.3125
(6,8)	5.875	6.125	0.375	5.75	5.75	0.3125
(6,9)	6.125	6.375	0.375	5.75	5.75	0.3125
(6,10)	6.375	6.5	0.375	5.75	5.75	0.3125
(6,11)	6.5	6.625	0.375	5.75	5.75	0.3125
(6,12)	6.625	6.875	0.375	5.75	5.75	0.3125
(6,13)	6.875	6.75	0.375	5.75	5.875	0.3125
(6,14)	6.75	6.25	0.375	5.875	6	0.3125
(6,15)	6.25	5.875	0.375	6	6.125	0.3125
(6,16)	5.875	5.625	0.3125	6.125	6.25	0.3125
(6,17)	5.625	5.5	0.3125	6.25	6.25	0.3125
(6,18)	5.5	5.5	0.3125	6.25	6.125	0.3125
(6,19)	5.5	5.5	0.3125	6.125	5.75	0.3125
(6,20)	5.5	5.75	0.3125	5.75	5.5	0.3125
(6,21)	5.75	6	0.375	5.5	5.5	0.3125

DOME J-DIRECTION MEMBER SIZES

BAR INDICES TJ(i, j)	W1 [in]	W2 [in]	tf [in]	D1 [in]	D2 [in]	tw [in]
(7,1)	6.75	6.75	0.375	5.5	5.5	0.3125
(7,2)	6.75	6.875	0.375	5.5	5.5	0.3125
(7,3)	6.875	6.875	0.375	5.5	5.625	0.3125
(7,4)	6.875	6.875	0.375	5.625	5.75	0.3125
(7,5)	6.875	6.875	0.375	5.75	5.75	0.3125
(7,6)	6.875	6.875	0.375	5.75	5.75	0.3125
(7,7)	6.875	6.875	0.375	5.75	5.75	0.3125
(7,8)	6.875	6.875	0.375	5.75	5.75	0.3125
(7,9)	6.875	7	0.5	5.75	5.75	0.3125
(7,10)	7	7.125	0.5	5.75	5.75	0.3125
(7,11)	7.125	7.375	0.5	5.75	5.75	0.3125
(7,12)	7.375	7.375	0.5	5.75	5.875	0.3125
(7,13)	7.375	6.875	0.5	5.875	6.25	0.3125
(7,14)	6.875	6.25	0.375	6.25	6.5	0.3125
(7,15)	6.25	5.75	0.375	6.5	6.5	0.3125
(7,16)	5.75	5.5	0.3125	6.5	6.5	0.375
(7,17)	5.5	5.5	0.3125	6.5	6.5	0.375
(7,18)	5.5	5.5	0.3125	6.5	6.25	0.375
(7,19)	5.5	5.5	0.3125	6.25	5.75	0.3125
(7,20)	5.5	5.5	0.3125	5.75	5.5	0.3125

DOME J-DIRECTION MEMBER SIZES

BAR INDICES TJ(i, j)	W1 [in]	W2 [in]	tf [in]	D1 [in]	D2 [in]	tw [in]
(8,1)	7.25	7.25	0.5	5.5	5.5	0.3125
(8,2)	7.25	7.25	0.5	5.5	5.625	0.3125
(8,3)	7.25	7.375	0.5	5.625	5.75	0.3125
(8,4)	7.375	7.5	0.5	5.75	5.75	0.3125
(8,5)	7.5	7.625	0.5	5.75	5.75	0.3125
(8,6)	7.625	7.75	0.5	5.75	5.875	0.3125
(8,7)	7.75	7.75	0.625	5.875	6	0.375
(8,8)	7.75	7.625	0.5	6	6	0.3125
(8,9)	7.625	7.5	0.5	6	6	0.3125
(8,10)	7.5	7.5	0.5	6	6	0.3125
(8,11)	7.5	7.5	0.5	6	6.125	0.3125
(8,12)	7.5	7.375	0.5	6.125	6.375	0.3125
(8,13)	7.375	7	0.5	6.375	6.875	0.375
(8,14)	7	6.5	0.375	6.875	7.375	0.375
(8,15)	6.5	6	0.375	7.375	7.5	0.375
(8,16)	6	5.625	0.3125	7.5	7.5	0.375
(8,17)	5.625	5.5	0.3125	7.5	7.375	0.375
(8,18)	5.5	5.5	0.3125	7.375	7	0.375
(8,19)	5.5	5.5	0.3125	7	6.75	0.375

DOME J-DIRECTION MEMBER SIZES

BAR INDICES TJ(i, j)	W1 [in]	W2 [in]	tf [in]	D1 [in]	D2 [in]	tw [in]
(9,1)	7.75	7.75	0.5	5.875	5.875	0.3125
(9,2)	7.75	7.875	0.5	5.875	6.125	0.3125
(9,3)	7.875	8.25	0.5	6.125	6.375	0.3125
(9,4)	8.25	8.75	0.5	6.375	6.625	0.3125
(9,5)	8.75	9.125	0.5	6.625	6.875	0.375
(9,6)	9.125	9.375	0.625	6.875	7.25	0.5
(9,7)	9.375	9.375	0.75	7.25	7.75	0.5
(9,8)	9.375	9.125	0.625	7.75	8	0.5
(9,9)	9.125	8.875	0.5	8	8	0.5
(9,10)	8.875	8.625	0.5	8	7.875	0.5
(9,11)	8.625	8.25	0.5	7.875	7.875	0.5
(9,12)	8.25	7.625	0.625	7.875	7.875	0.5
(9,13)	7.625	6.875	0.625	7.875	7.875	0.5
(9,14)	6.875	6.125	0.5	7.875	8.25	0.5
(9,15)	6.125	5.5	0.375	8.25	7.875	0.5
(9,16)	5.5	5.25	0.3125	7.875	7.125	0.375
(9,17)	5.25	5.125	0.3125	7.125	6.375	0.375
(9,18)	5.125	5	0.3125	6.375	6	0.375

DOME J-DIRECTION MEMBER SIZES

BAR INDICES TJ(i, j)	W1 [in]	W2 [in]	tf [in]	D1 [in]	D2 [in]	tw [in]
(10,1)	7.625	7.625	0.5	5.875	5.875	0.3125
(10,2)	7.625	7.875	0.5	5.875	6	0.3125
(10,3)	7.875	8.375	0.5	6	6.125	0.3125
(10,4)	8.375	9.125	0.5	6.125	6.75	0.3125
(10,5)	9.125	9.625	0.625	6.75	7.75	0.375
(10,6)	9.625	9.875	0.625	7.75	8.75	0.5
(10,7)	9.875	10.125	0.75	8.75	9.5	0.625
(10,8)	10.125	10.125	0.625	9.5	9.625	0.5
(10,9)	10.125	9.75	0.625	9.625	9.375	0.5
(10,10)	9.75	9.125	0.625	9.375	8.875	0.5
(10,11)	9.125	8.5	0.5	8.875	8.125	0.5
(10,12)	8.5	7.875	0.5	8.125	7.5	0.5
(10,13)	7.875	6.875	0.625	7.5	7.25	0.5
(10,14)	6.875	5.875	0.375	7.25	7	0.375
(10,15)	5.875	5.375	0.3125	7	6.375	0.375
(10,16)	5.375	5.25	0.3125	6.375	5.875	0.3125
(10,17)	5.25	5.25	0.3125	5.875	5.75	0.3125

DOME J-DIRECTION MEMBER SIZES

BAR INDICES TJ(i, j)	W1 [in]	W2 [in]	tf [in]	D1 [in]	D2 [in]	tw [in]
(11,1)	8.25	8.25	0.5	7.125	7.125	0.375
(11,2)	8.25	8.75	0.5	7.125	7.375	0.375
(11,3)	8.75	9.125	0.5	7.375	7.5	0.375
(11,4)	9.125	9.375	0.625	7.5	8	0.375
(11,5)	9.375	9.5	0.625	8	9.25	0.5
(11,6)	9.5	9.75	0.625	9.25	10.625	0.5
(11,7)	9.75	10.375	0.625	10.625	11.625	0.625
(11,8)	10.375	10.875	0.625	11.625	11.625	0.625
(11,9)	10.875	10.5	0.625	11.625	10.75	0.625
(11,10)	10.5	9.5	0.625	10.75	9.5	0.5
(11,11)	9.5	8.625	0.5	9.5	8.375	0.5
(11,12)	8.625	7.625	0.5	8.375	7.75	0.5
(11,13)	7.625	6.375	0.625	7.75	7.5	0.5
(11,14)	6.375	5.375	0.375	7.5	7.125	0.375
(11,15)	5.375	5	0.3125	7.125	6.375	0.375
(11,16)	5	5	0.3125	6.375	6	0.3125

DOME J-DIRECTION MEMBER SIZES

BAR INDICES TJ(i, j)	W1 [in]	W2 [in]	tf [in]	D1 [in]	D2 [in]	tw [in]
(12,1)	7.25	7.25	0.5	8.625	8.625	0.5
(12,2)	7.25	7.75	0.5	8.625	8.875	0.5
(12,3)	7.75	8.25	0.5	8.875	8.875	0.5
(12,4)	8.25	8.875	0.5	8.875	9.25	0.5
(12,5)	8.875	9.375	0.5	9.25	10.75	0.5
(12,6)	9.375	9.875	0.625	10.75	12.625	0.625
(12,7)	9.875	10.625	0.625	12.625	13.75	0.75
(12,8)	10.625	11.375	0.75	13.75	13.625	0.75
(12,9)	11.375	10.75	0.75	13.625	11.625	0.75
(12,10)	10.75	9.125	0.625	11.625	9.125	0.5
(12,11)	9.125	8	0.5	9.125	7.75	0.5
(12,12)	8	7	0.5	7.75	7.125	0.375
(12,13)	7	6	0.375	7.125	6.75	0.375
(12,14)	6	5.375	0.3125	6.75	6.25	0.375
(12,15)	5.375	5.25	0.3125	6.25	6	0.375

DOME J-DIRECTION MEMBER SIZES

BAR INDICES TJ(i, j)	W1 [in]	W2 [in]	tf [in]	D1 [in]	D2 [in]	tw [in]
(13,1)	6.875	6.875	0.5	9.375	9.375	0.5
(13,2)	6.875	7.125	0.5	9.375	9.5	0.5
(13,3)	7.125	7.5	0.5	9.5	9.875	0.5
(13,4)	7.5	8.25	0.5	9.875	11.375	0.5
(13,5)	8.25	9.875	0.625	11.375	13.75	0.625
(13,6)	9.875	12.5	0.75	13.75	16	0.75
(13,7)	12.5	14.5	1	16	18.5	1
(13,8)	14.5	15.5	1	18.5	20	1
(13,9)	15.5	16	1.5	20	20	1.5

DOME J-DIRECTION MEMBER SIZES

BAR INDICES TJ(i, j)	W1 [in]	W2 [in]	tf [in]	D1 [in]	D2 [in]	tw [in]
(14,1)	5.875	5.875	0.3125	7.125	7.125	0.375
(14,2)	5.875	6	0.375	7.125	7.125	0.375
(14,3)	6	6.25	0.375	7.125	8	0.375
(14,4)	6.25	6.625	0.375	8	10.25	0.5
(14,5)	6.625	7.375	0.5	10.25	12.75	0.625
(14,6)	7.375	8.125	0.5	12.75	14	0.75
(14,7)	8.125	8.625	0.5	14	14.5	0.75
(14,8)	8.625	9.625	0.5	14.5	15.5	0.75
(14,9)	9.625	10.25	0.625	15.5	16.25	1

NOTES:

1. REFER TO DETAILS 1 & 2 ON S-622 FOR DOME CANOPY KEY PLAN INDICATING MEMBER INDICES AS SHOWN ON THESE SCHEDULES.
2. REFER TO DETAILS 3 & 4 ON S-622 FOR DOME CANOPY BUILT-UP TEE SECTION PLATE DIMENSION KEY DIAGRAMS.
3. MEMBER TJ(13,9) DIMENSIONS ARE APPROXIMATE - FOR DETAILS OF THIS 3D TRANSITION PIECE, REFER TO S-645 & S-645
4. COORDINATE TEE SECTIONS WITH SUPPORT OF HANGING CLOCK ELEMENT. AT POINTS OF ANCHORAGE OF CLOCK SUPPORT STRUCTURE, "tw" SHALL BE MINIMUM OF 3/4" FOR THAT MEMBER.

DESIGN BY:									
DRAWN BY:									
CHECKED BY:									
APPROVED BY:		4	7/3/2023	ISSUED FOR BID					
CDOT/APPROVED BY:		0	9/9/2022	ISSUED FOR PERMIT	MC	MW	BY		
		NO.	DATE	REVISIONS	DES.	DRW.	CHK.	DCCO	CDOT

TRANSYSTEMS
222 SOUTH RIVERSIDE PLAZA SUITE 610
CHICAGO, ILLINOIS 60606

SKIDMORE, OWINGS & MERRILL LLP
224 SOUTH MICHIGAN AVENUE, SUITE 1000
CHICAGO, ILLINOIS 60604

CHICAGO DEPARTMENT OF TRANSPORTATION
DIVISION OF ENGINEERING

STATE / LAKE LOOP ELEVATED STATION
200 NORTH STATE STREET, CHICAGO, IL 60601

SPEC. NO.

DOME CANOPY J-DIRECTION MEMBER SCHEDULES

DRAWING NO. S-625

CDOT PROJECT D-1-209

DATE: 9/9/2022

REVISION NO.4

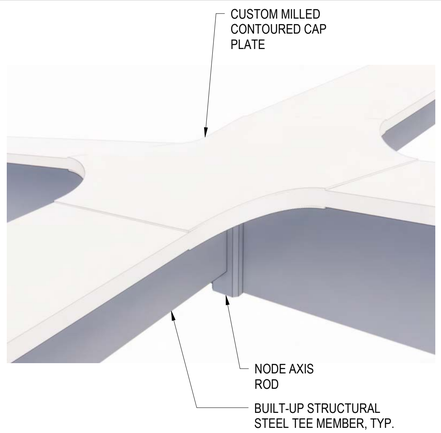

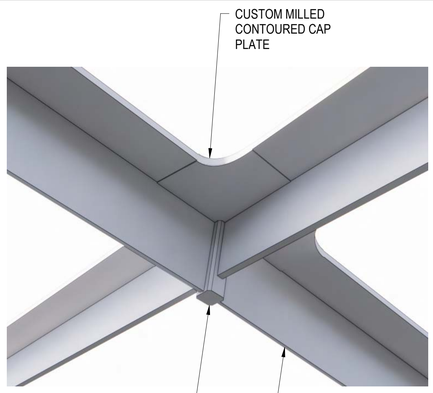

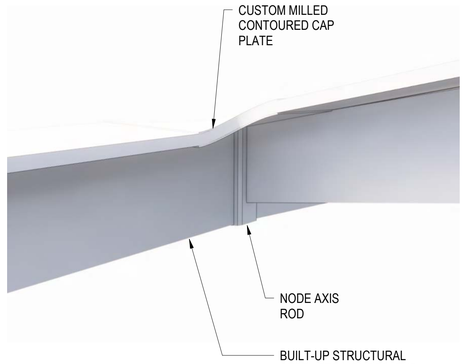

NOTES:
1. GEOMETRY IS EXAGGERATED FOR CLARITY
2. SEE 1/S-627 FOR 3D ASSEMBLY IMAGES

1 NODE 3D IMAGES
NTS

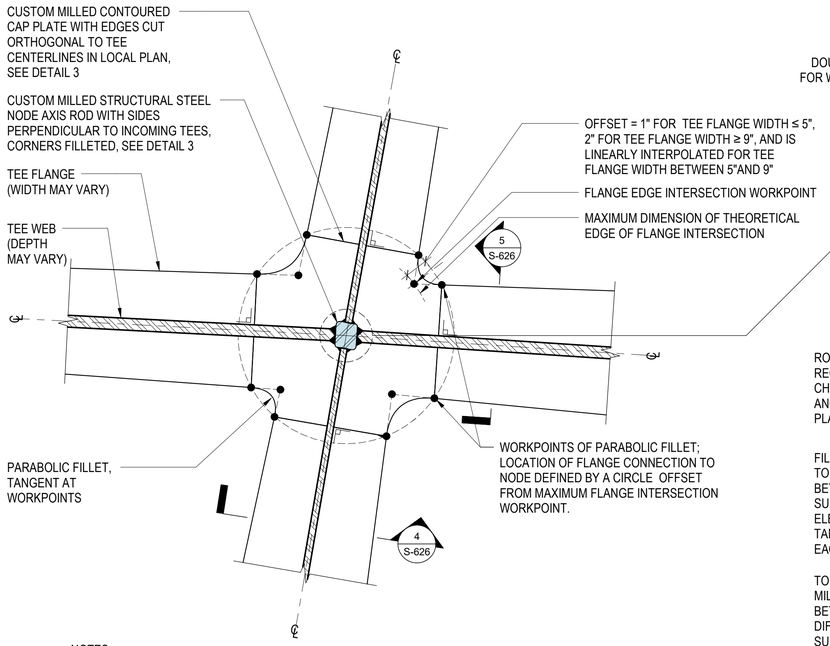

NOTES:
1. GRAPHICS ARE DIAGRAMATIC; DOES NOT REPRESENT A SPECIFIC NODE
2. NODE AXIS DIRECTIONS VARIES OVER GRID, REFER TO S-622 & 623

2 TYPICAL NODE LOCAL PLAN (VIEW FROM BELOW)
NTS

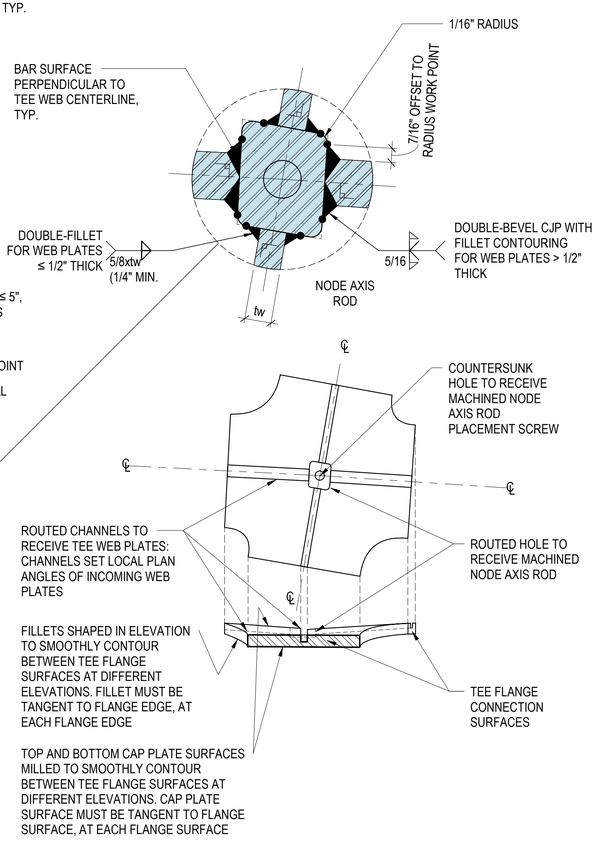

3 TYPICAL CUSTOM MILLED CONTOURED CAP PLATE
NOT TO SCALE

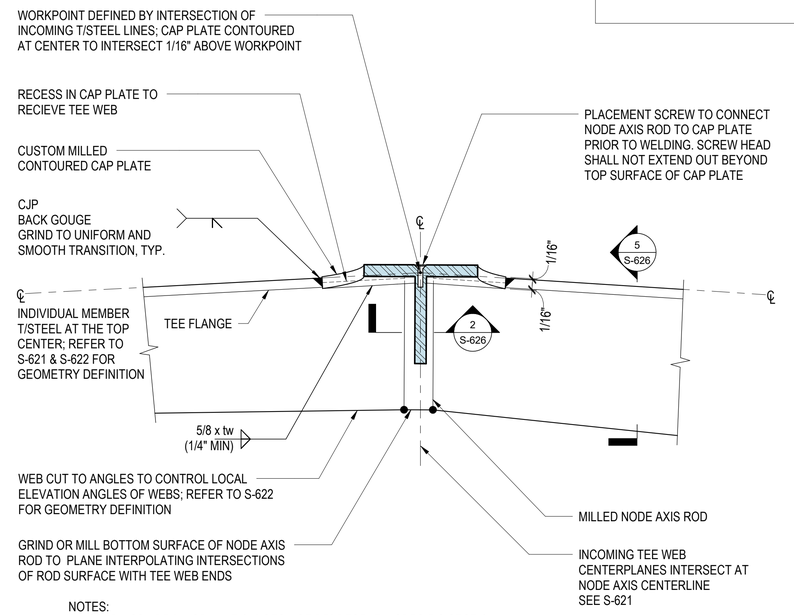

NOTES:
1. GRAPHICS ARE DIAGRAMATIC; DOES NOT REPRESENT A SPECIFIC SECTION
2. NODE AXIS DIRECTION WITH RESPECT TO VERTICAL VARIES; SEE TO S-622

4 TYPICAL NODE LOCAL ELEVATION
NTS

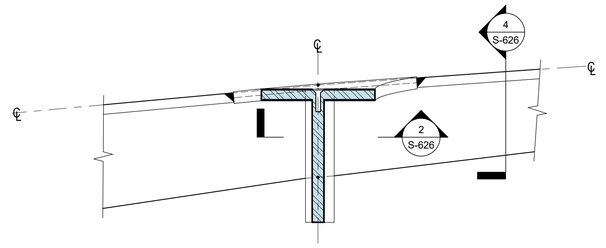

NOTES:
1. SEE DETAIL 4 FOR ANNOTATION AND NOTES

5 TYPICAL LOCAL NODE ELEVATION-OTHER DIRECTION
NTS

DESIGN BY:										
DRAWN BY:										
CHECKED BY:										
APPROVED BY:		4	7/3/2023	ISSUED FOR BID						
CDOT/APPROVED BY:		0	9/9/2022	ISSUED FOR PERMIT	MC	MW	BY			
		NO.	DATE	REVISIONS	DES.	DRW.	CHK.	DCCO	CDOT	

TRANSYSTEMS
222 SOUTH RIVERSIDE PLAZA SUITE 610
CHICAGO, ILLINOIS 60606

SKIDMORE, OWINGS & MERRILL LLP
224 SOUTH MICHIGAN AVENUE, SUITE 1000
CHICAGO, ILLINOIS 60604

CHICAGO DEPARTMENT OF TRANSPORTATION
DIVISION OF ENGINEERING

STATE / LAKE LOOP ELEVATED STATION
200 NORTH STATE STREET, CHICAGO, IL 60601

SPEC. NO.

DOME CANOPY DETAILS

DRAWING NO. S-626

CDOT PROJECT D-1-209

DATE: 9/9/2022

REVISION NO.4

SCREW NODE AXIS BAR INTO ROUTED CAP PLATE

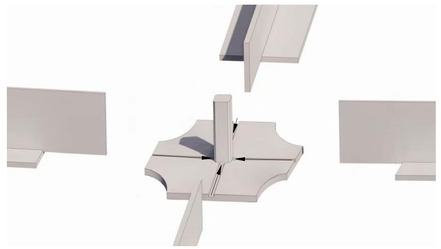

ASSEMBLE BUILT-UP TEE WEB EXTENSIONS INTO CAP PLATE CHANNELS. ALIGN FLANGE PLATES AGAINST CAP PLATE WELD ASSEMBLY

FINISHED JOINT

1 DOME CANOPY NODE ASSEMBLY DIAGRAMS
NOT TO SCALE

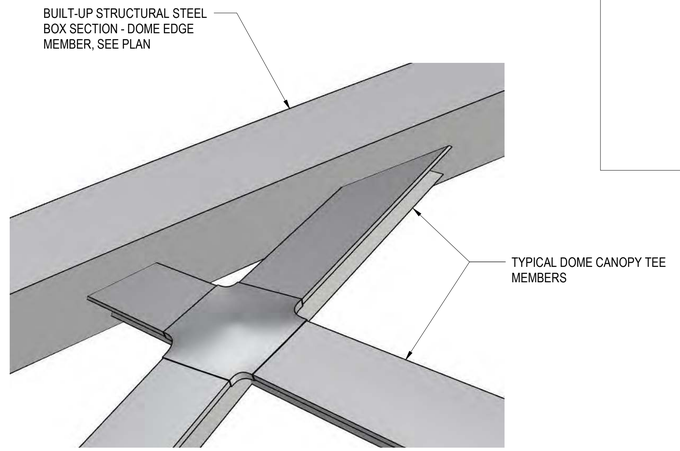

2 DOME CONNECTION TO EDGE MEMBER - 3D IMAGE
NOT TO SCALE

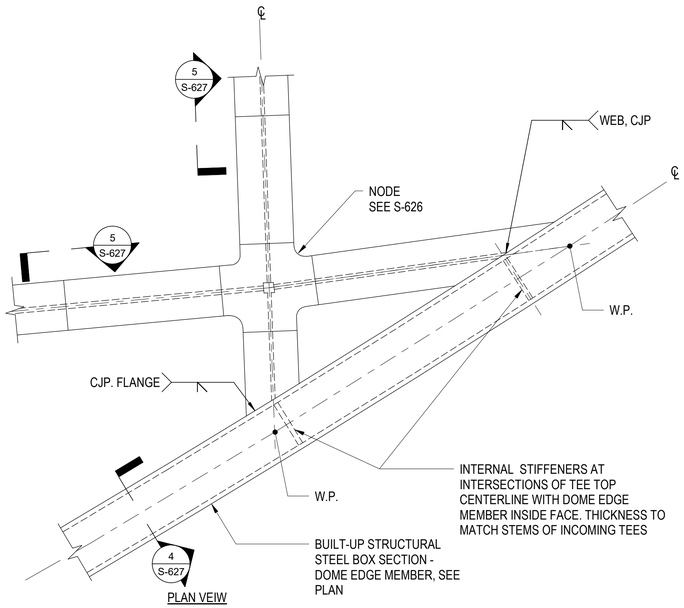

PLAN VEIW

3 DOME CONNECTION TO EDGE MEMBER
1 1/2" = 1'-0"

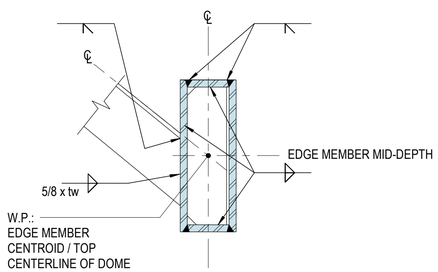

NOTES:
1. CENTROID OF EDGE MEMBER IS DEFINED BY TEE WORK POINTS, AS SPECIFIED ON S-621 AND S-623.
2. EDGE MEMBER IS CONSTRUCTED FROM CURVED PLATES, ALONG A PARABOLIC CURVE THAT INTERPOLATES TEE WORKPOINTS
3. EDGE MEMBER PLATES ARE CUT TO SHAPE AND MEMBER PROFILE
4. EDGE MEMBER SIDE PLATES ARE VERTICAL
5. STRESS- RELIEVE EDGE MEMBER AS REQUIRED

4 DOME EDGE MEMBER SECTION
1 1/2" = 1'-0"

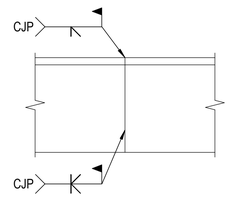

5 TYPICAL DOME TEE WELDED FIELD SPLICE
1 1/2" = 1'-0"

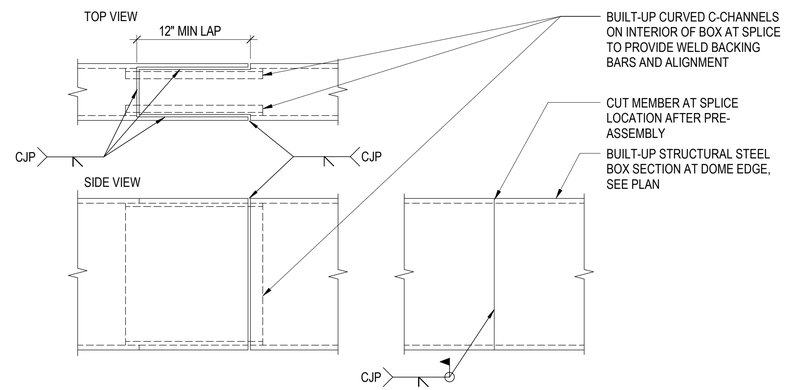

SHOP SPLICE

NOTE:
1. SHOP SPLICE INTENDED FOR USE IN TYPICAL SHOP FABRICATED ASSEMBLIES PRIOR TO DELIEVERY FOR OFF-SITE ERECTION

FIELD SPLICE

NOTE:
1. FIELD SPLICE INTENDED FOR USE AT LOCATIONS WHERE EDGE MEMBER IS CUT AS PART OF THE DIS-ASSEMBLY FROM THE OFF-SITE ERECTION LOCATION, FOR DELIVERY TO SITE.
2. CUT IN EDGE MEMBER SHOULD BE AT LEAST 24" CLEAR OF SHOP SPLICES.
3. ALTERNATIVE TO THE USE OF THIS FIELD SPLICE, TEMPORARY ERECTION CLIPS MAY BE USED WITH THE 'SHOP SPLICE' DETAIL AT THE INTENDED LOCATION OF DIS-ASSEMBLY FROM THE OFF-SITE ERECTION. THE TEMPORARY ERECTION CLIPS SHALL BE FULLY CONNECTED DURING THE OFF-SITE ERECTION, AND SHALL BE CAPABLE OF FULLY DEVELOPING THE CROSS-SECTIONAL CAPACITY OF THE EDGE MEMBER

6 TYPICAL DOME EDGE MEMBER WELDED SPLICE
1 1/2" = 1'-0"

DESIGN BY:										
DRAWN BY:										
CHECKED BY:										
APPROVED BY:		4	7/3/2023	ISSUED FOR BID						
CDOT/APPROVED BY:		0	9/9/2022	ISSUED FOR PERMIT	MC	MW	BY			
		NO.	DATE	REVISIONS	DES.	DRW.	CHK.	DCCO	CDOT	

TRANSYSTEMS
222 SOUTH RIVERSIDE PLAZA SUITE 610
CHICAGO, ILLINOIS 60606

SKIDMORE, OWINGS & MERRILL LLP
224 SOUTH MICHIGAN AVENUE, SUITE 1000
CHICAGO, ILLINOIS 60604

CHICAGO DEPARTMENT OF TRANSPORTATION
DIVISION OF ENGINEERING

STATE / LAKE LOOP ELEVATED STATION
200 NORTH STATE STREET, CHICAGO, IL 60601

SPEC. NO.

DOME CANOPY DETAILS

DRAWING NO. S-627

CDOT PROJECT D-1-209 | DATE: 9/9/2022 | REVISION NO.4

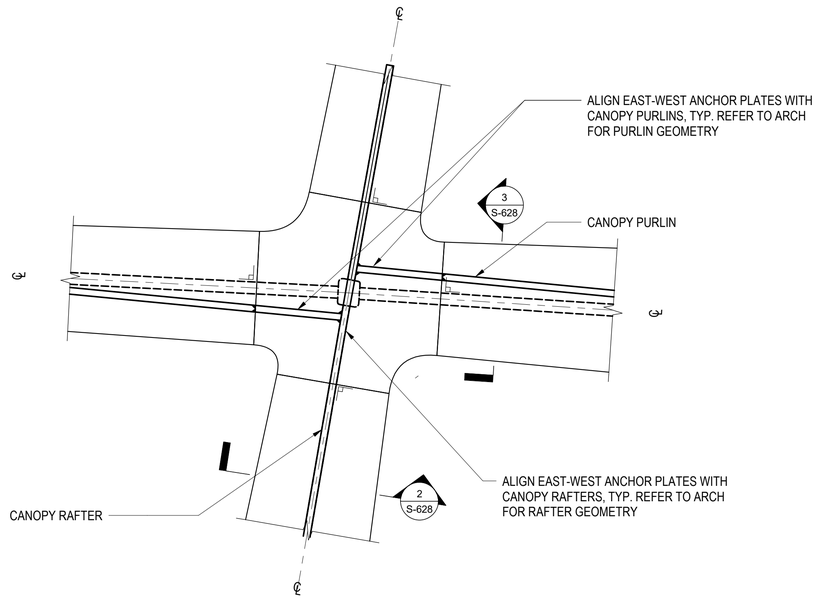

NOTES:
1. REFER TO 2/A-512 FOR ARCH. DETAIL

1 FALL ARREST SYSTEM ANCHOR
NTS

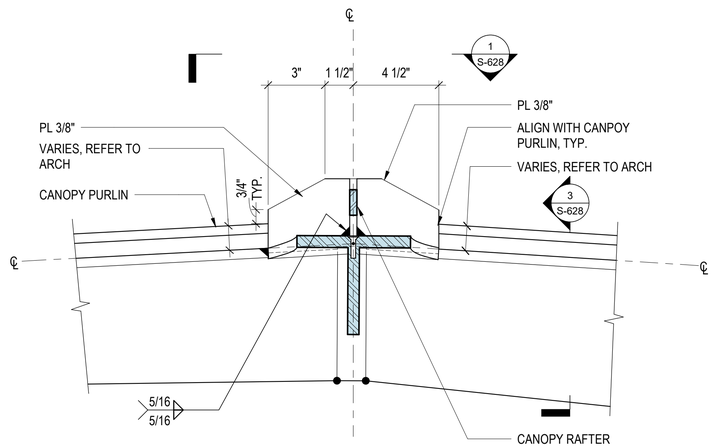

2 FALL ARREST SYSTEM ELEVATION
NTS

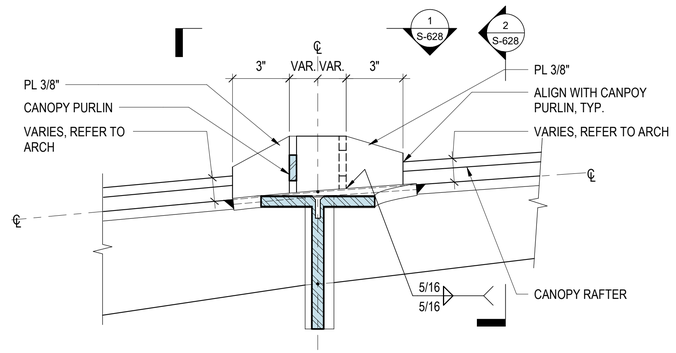

3 FALL ARREST SYSTEM ELEVATION
NTS

DESIGN BY:										
DRAWN BY:										
CHECKED BY:										
APPROVED BY:		4	7/3/2023	ISSUED FOR BID						
CDOT/APPROVED BY:		0	9/9/2022	ISSUED FOR PERMIT	MC	MW	BY			
		NO.	DATE	REVISIONS	DES.	DRW.	CHK.	DCCO	CDOT	

TRANSYSTEMS
222 SOUTH RIVERSIDE PLAZA SUITE 610
CHICAGO, ILLINOIS 60606

SKIDMORE, OWINGS & MERRILL LLP
224 SOUTH MICHIGAN AVENUE, SUITE 1000
CHICAGO, ILLINOIS 60604

CHICAGO DEPARTMENT OF TRANSPORTATION
DIVISION OF ENGINEERING

STATE / LAKE LOOP ELEVATED STATION
200 NORTH STATE STREET, CHICAGO, IL 60601

SPEC. NO.

DOME CANOPY DETAILS

DRAWING NO. S-628

CDOT PROJECT D-1-209

DATE: 9/9/2022

REVISION NO.4

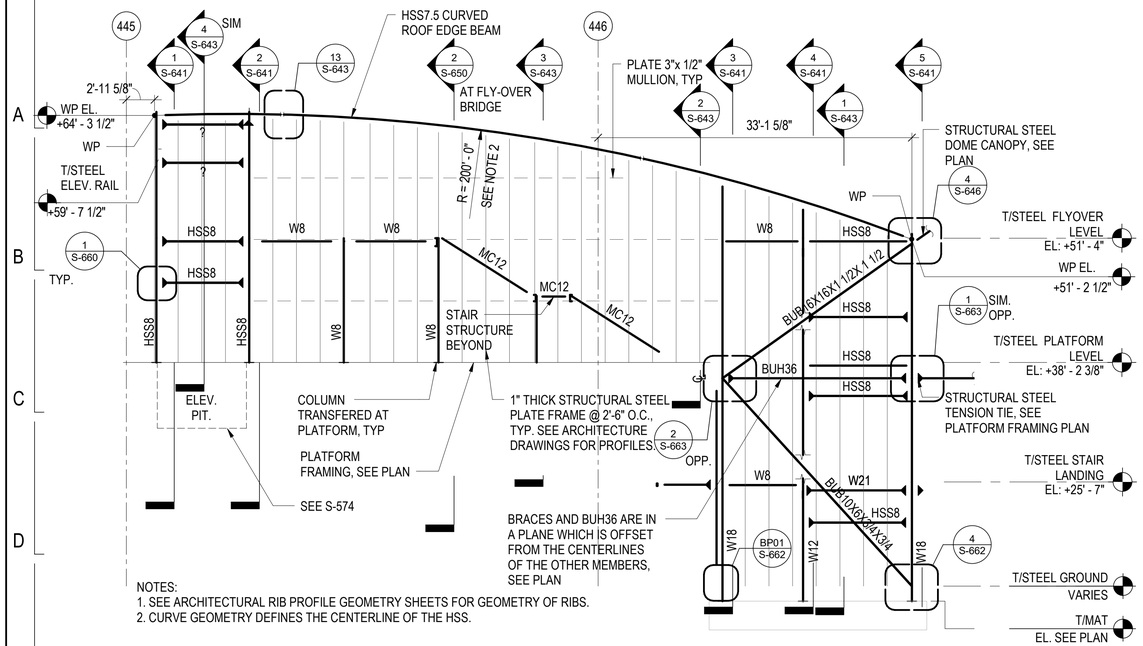

NOTES:
1. SEE ARCHITECTURAL RIB PROFILE GEOMETRY SHEETS FOR GEOMETRY OF RIBS.
2. CURVE GEOMETRY DEFINES THE CENTERLINE OF THE HSS.

1 FRAME ELEVATION (OUTER FRAME)
1/8" = 1'-0"

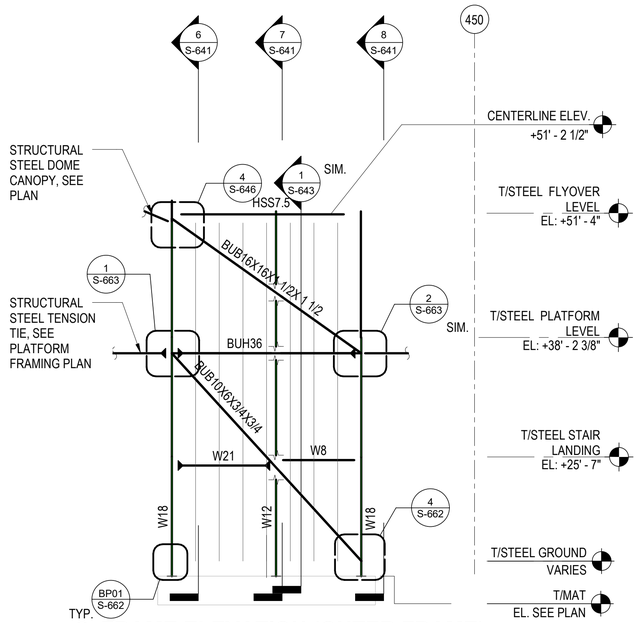

3 FRAME ELEVATION (OUTER FRAME)
1/8" = 1'-0"

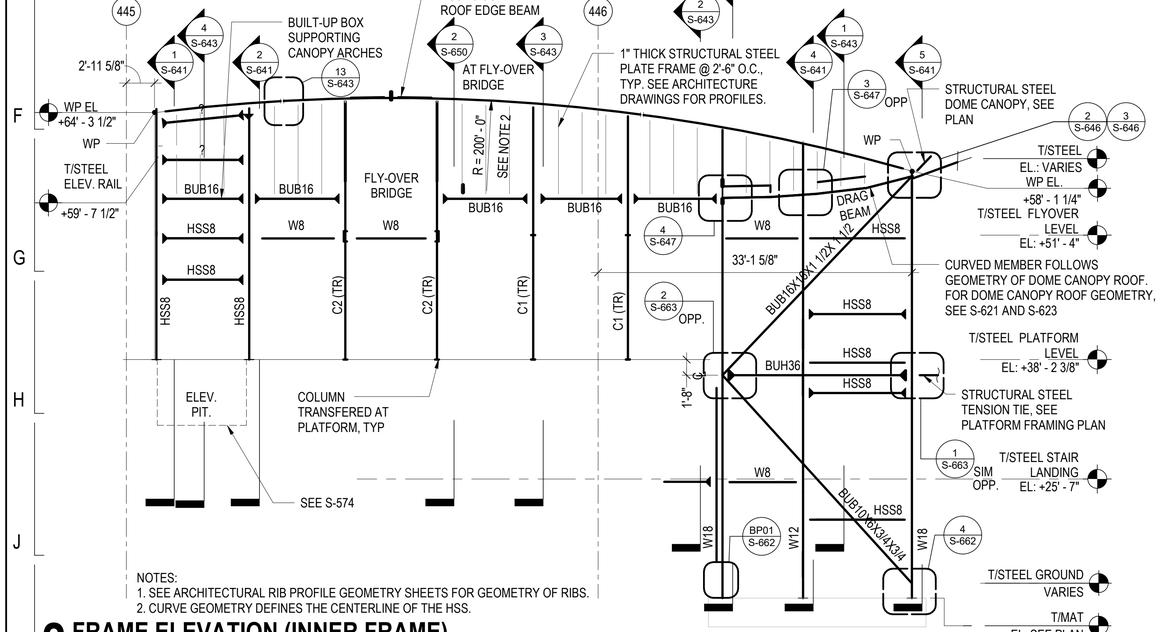

NOTES:
1. SEE ARCHITECTURAL RIB PROFILE GEOMETRY SHEETS FOR GEOMETRY OF RIBS.
2. CURVE GEOMETRY DEFINES THE CENTERLINE OF THE HSS.

2 FRAME ELEVATION (INNER FRAME)
1/8" = 1'-0"

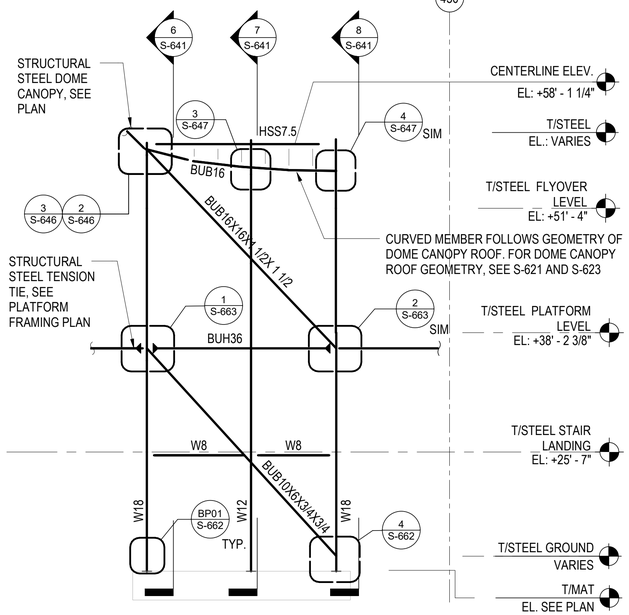

4 FRAME ELEVATION (INNER FRAME)
1/8" = 1'-0"

DESIGN BY:									
DRAWN BY:		4	7/3/2023	ISSUED FOR BID					
CHECKED BY:		2	1/13/2023	ISSUED FOR PERMIT REVISION 2					
		1	11/4/2022	ISSUED FOR PERMIT REVISION 1					
APPROVED BY:		0	9/9/2022	ISSUED FOR PERMIT	MC	MW	BY		
CDOT/APPROVED BY:		NO.	DATE	REVISIONS	DES.	DRW.	CHK.	DCCO	CDOT

TRANSYSTEMS
222 SOUTH RIVERSIDE PLAZA SUITE 610
CHICAGO, ILLINOIS 60606

SKIDMORE, OWINGS & MERRILL LLP
224 SOUTH MICHIGAN AVENUE, SUITE 1000
CHICAGO, ILLINOIS 60604

CHICAGO DEPARTMENT OF TRANSPORTATION
DIVISION OF ENGINEERING

STATE / LAKE LOOP ELEVATED STATION
200 NORTH STATE STREET, CHICAGO, IL 60601

TOWER ELEVATIONS

SPEC. NO.

DRAWING NO. S-640

CDOT PROJECT D-1-209 | DATE: 9/9/2022 | REVISION NO. 4

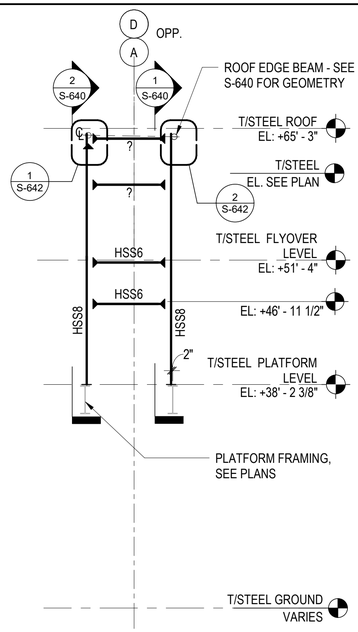

1 FRAME ELEVATION
1/8" = 1'-0"

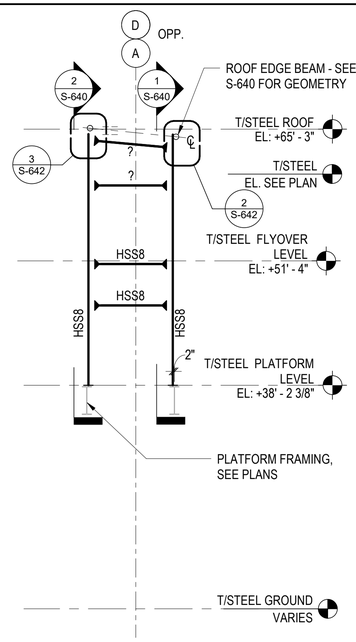

2 FRAME ELEVATION
1/8" = 1'-0"

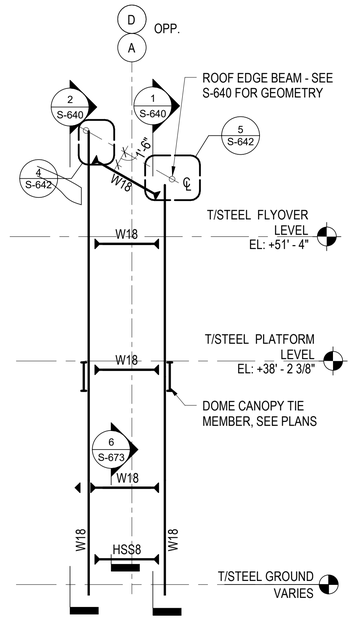

3 FRAME ELEVATION
1/8" = 1'-0"

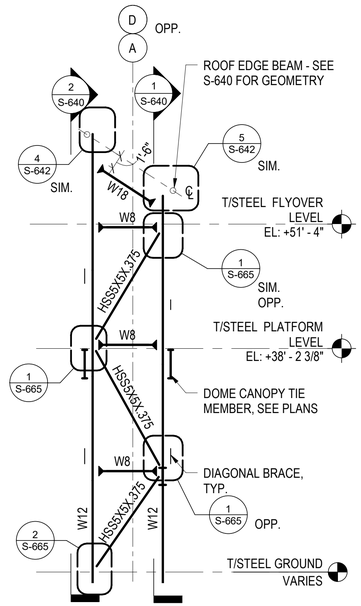

4 FRAME ELEVATION
1/8" = 1'-0"

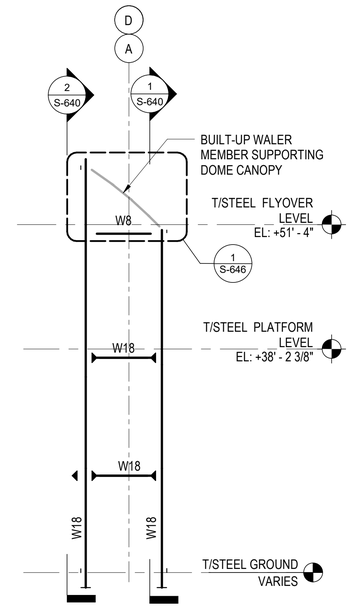

5 FRAME ELEVATION
1/8" = 1'-0"

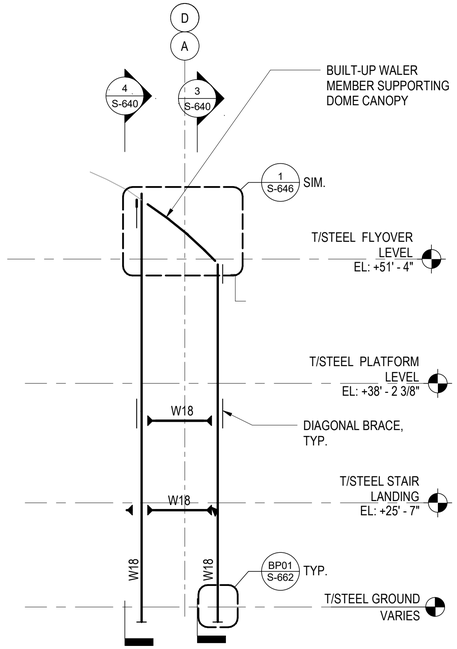

6 FRAME ELEVATION
1/8" = 1'-0"

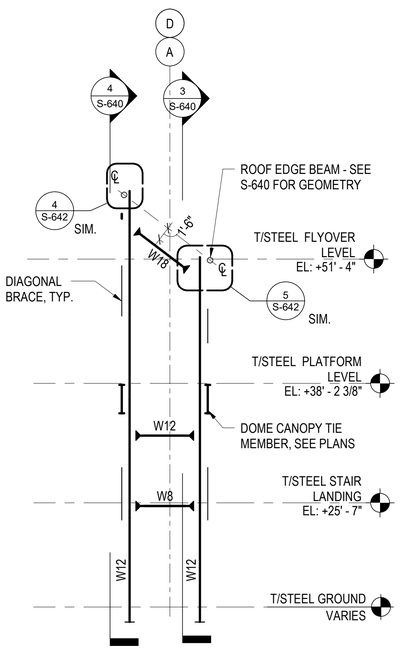

7 FRAME ELEVATION
1/8" = 1'-0"

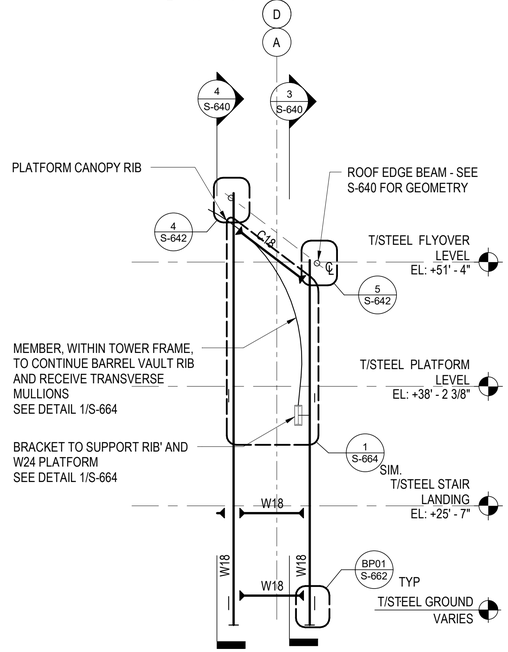

8 FRAME ELEVATION
1/8" = 1'-0"

NO.	DATE	REVISIONS	DES.	DRW.	CHK.	DCCO	CDOT
4	7/3/2023	ISSUED FOR BID					
2	1/13/2023	ISSUED FOR PERMIT REVISION 2					
1	11/4/2022	ISSUED FOR PERMIT REVISION 1					
0	9/9/2022	ISSUED FOR PERMIT	MC	MW	BY		

DESIGN BY:
DRAWN BY:
CHECKED BY:
APPROVED BY:
CDOT/APPROVED BY:

TRANSYSTEMS
222 SOUTH RIVERSIDE PLAZA SUITE 610
CHICAGO, ILLINOIS 60606

SKIDMORE, OWINGS & MERRILL LLP
224 SOUTH MICHIGAN AVENUE, SUITE 1000
CHICAGO, ILLINOIS 60604

CHICAGO DEPARTMENT
OF TRANSPORTATION
DIVISION OF ENGINEERING

STATE / LAKE LOOP ELEVATED STATION
200 NORTH STATE STREET, CHICAGO, IL 60601

SPEC. NO.

TOWER ELEVATIONS

DRAWING NO.
S-641

CDOT PROJECT D-1-209

DATE: 9/9/2022

REVISION NO. 4

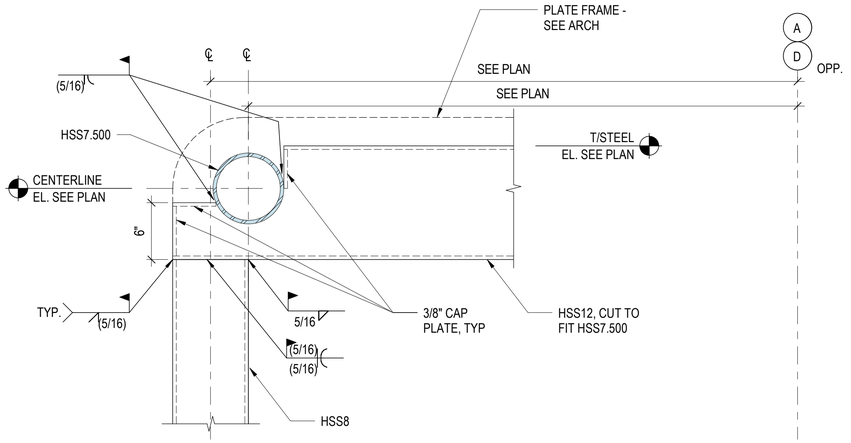

1 ROOF BEAM DETAIL
1 1/2" = 1'-0"

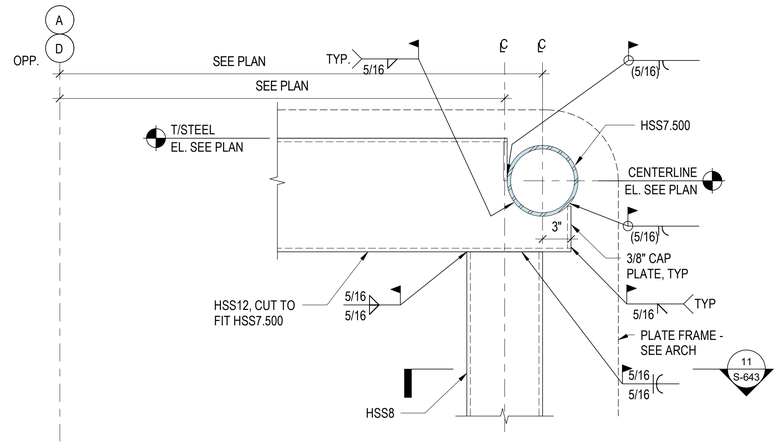

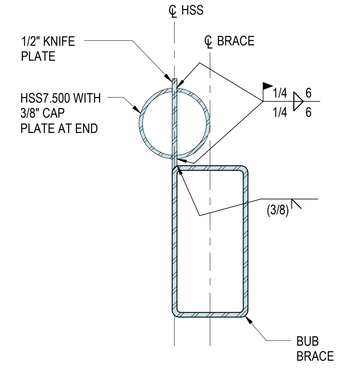

6 ROOF BEAM TO BRACE DETAIL
1 1/2" = 1'-0"

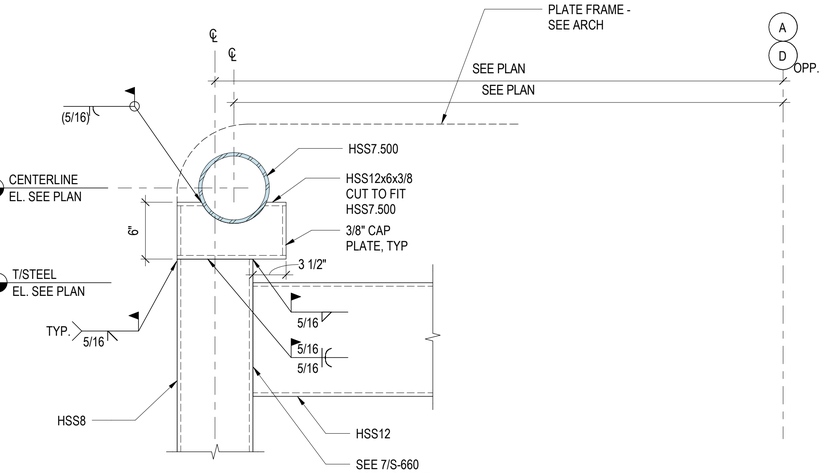

NOTES:
1. SEE DETAIL 1 FOR ADDITIONAL INFORMATION.

3 ROOF BEAM DETAIL
1 1/2" = 1'-0"

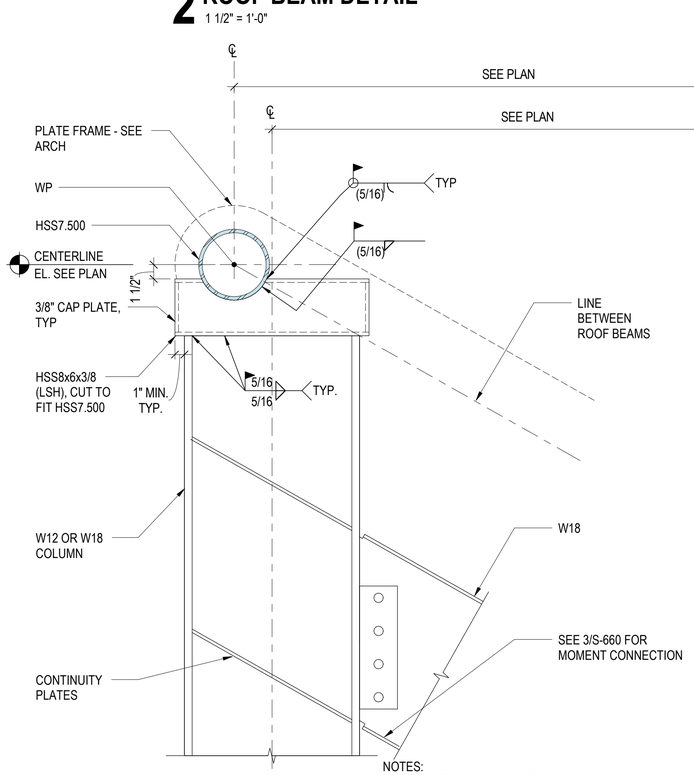

NOTES:
1. SEE DETAIL 1 FOR ADDITIONAL INFORMATION.
2. SEE S-660 FOR ADDITIONAL INFORMATION REGARDING MOMENT CONNECTIONS.

4 ROOF BEAM DETAIL
1 1/2" = 1'-0"

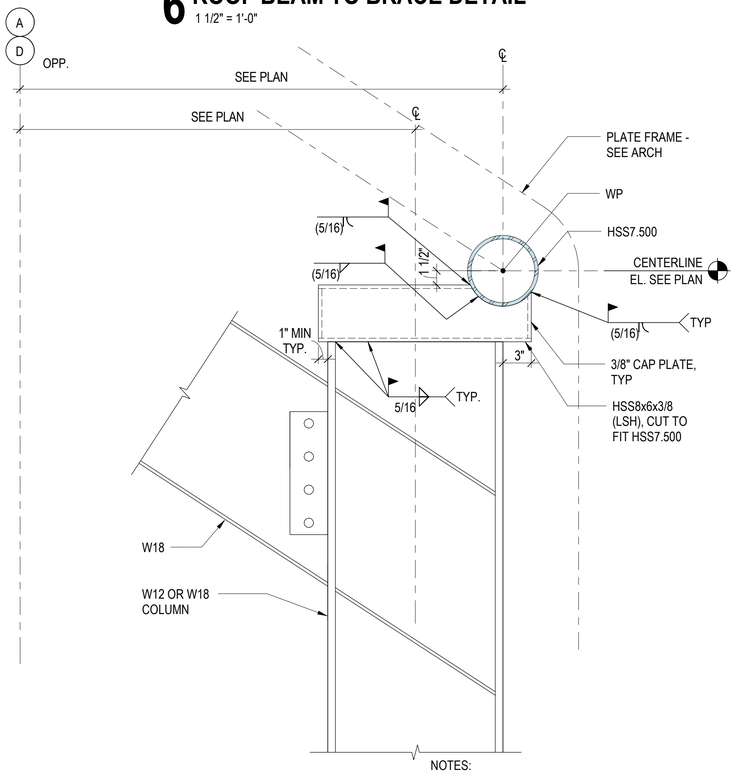

NOTES:
1. SEE DETAIL 1 FOR ADDITIONAL INFORMATION.
2. SEE S-660 FOR ADDITIONAL INFORMATION REGARDING MOMENT CONNECTIONS.

5 ROOF BEAM DETAIL
1 1/2" = 1'-0"

DESIGN BY:										
DRAWN BY:										
CHECKED BY:		4	7/3/2023	ISSUED FOR BID						
APPROVED BY:		1	11/4/2022	ISSUED FOR PERMIT REVISION 1						
CDOT/APPROVED BY:		0	9/9/2022	ISSUED FOR PERMIT	MC	MW	BY			
		NO.	DATE	REVISIONS	DES.	DRW.	CHK.	DCCO	CDOT	

TRANSYSTEMS
222 SOUTH RIVERSIDE PLAZA SUITE 610
CHICAGO, ILLINOIS 60606

SKIDMORE, OWINGS & MERRILL LLP
224 SOUTH MICHIGAN AVENUE, SUITE 1000
CHICAGO, ILLINOIS 60604

CHICAGO DEPARTMENT OF TRANSPORTATION
DIVISION OF ENGINEERING

STATE / LAKE LOOP ELEVATED STATION
200 NORTH STATE STREET, CHICAGO, IL 60601

SPEC. NO.

ROOF DETAIL

DRAWING NO.
S-642

CDOT PROJECT D-1-209 | DATE: 9/9/2022 | REVISION NO. 4

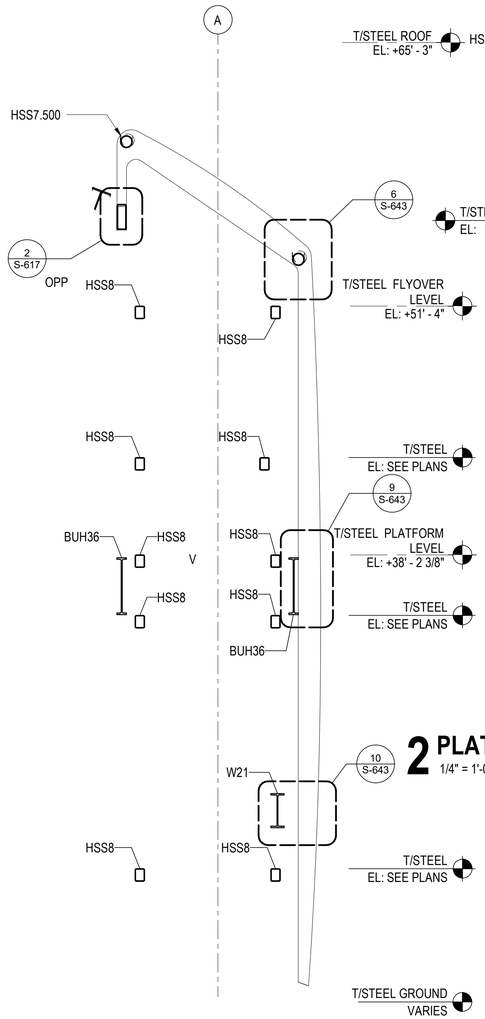

1 PLATE FRAME ELEVATON AT ABUTMENT TOWER
1/4" = 1'-0"

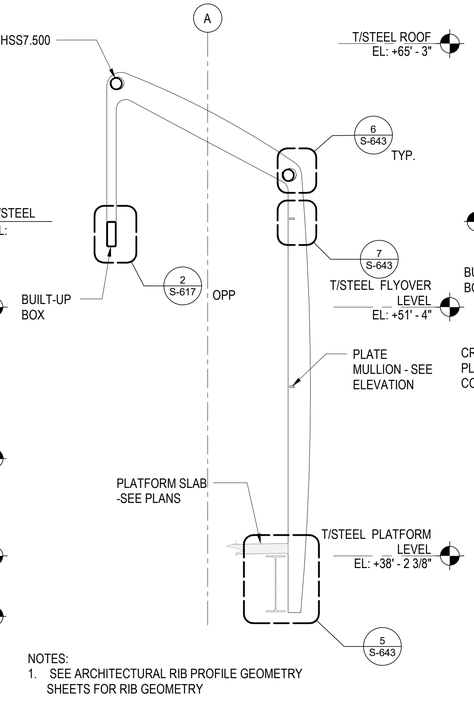

NOTES:
1. SEE ARCHITECTURAL RIB PROFILE GEOMETRY SHEETS FOR RIB GEOMETRY

2 PLATE FRAME ELEVATON AT PLATFORM
1/4" = 1'-0"

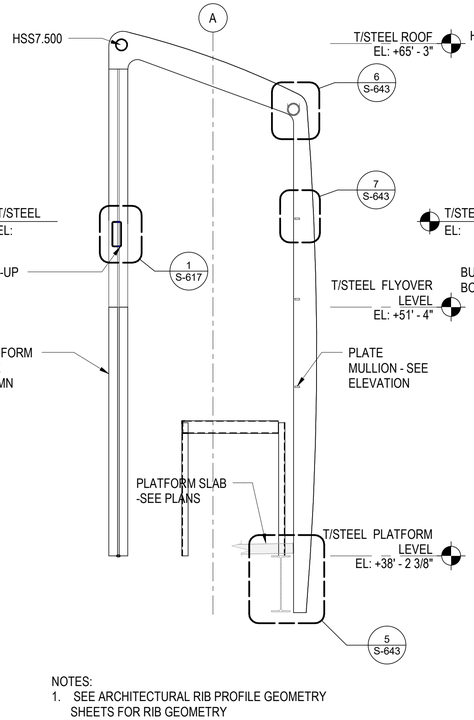

NOTES:
1. SEE ARCHITECTURAL RIB PROFILE GEOMETRY SHEETS FOR RIB GEOMETRY

3 PLATE FRAME ELEVATON AT PLATFORM
1/4" = 1'-0"

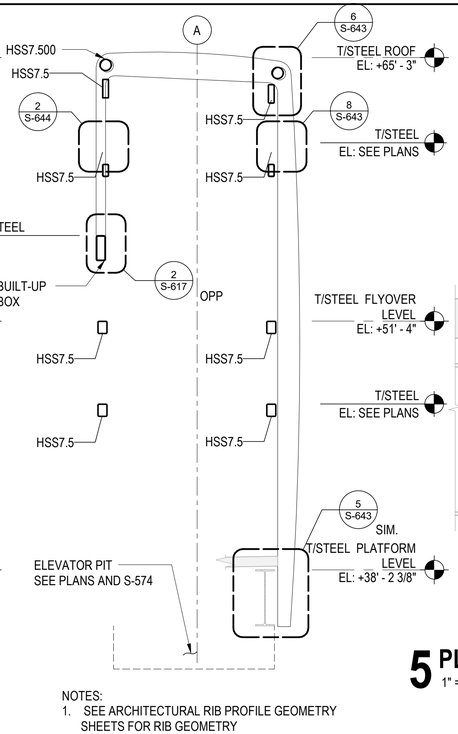

NOTES:
1. SEE ARCHITECTURAL RIB PROFILE GEOMETRY SHEETS FOR RIB GEOMETRY

4 PLATE FRAME ELEVATON AT PLATFORM
1/4" = 1'-0"

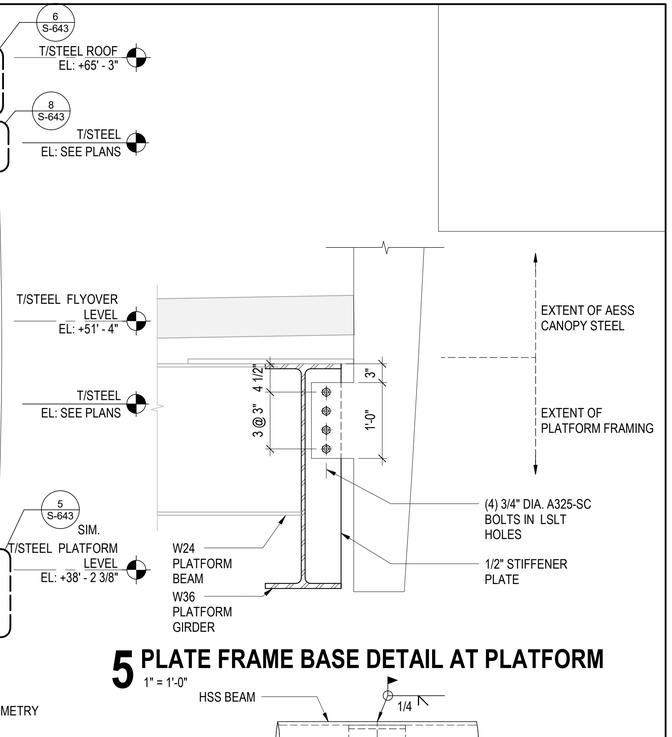

5 PLATE FRAME BASE DETAIL AT PLATFORM
1" = 1'-0"

NOTE:
SEE S-640 FOR LOCATIONS OF ELEVATIONS 1-4.

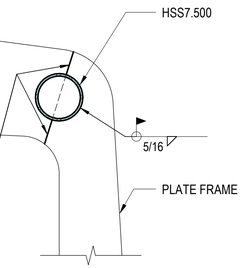

6 PLATE FRAME SPLICE AT ROOF BEAM
1" = 1'-0"

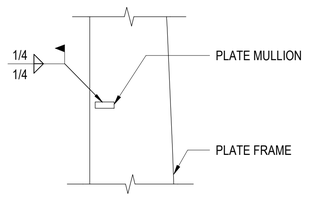

7 PLATE MULLION DETAIL
1" = 1'-0"

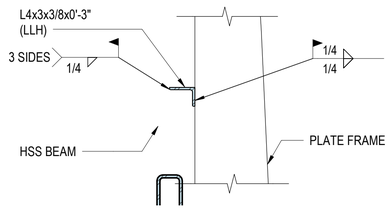

8 PLATE FRAME LATERAL SUPPORT DETAIL
1" = 1'-0"

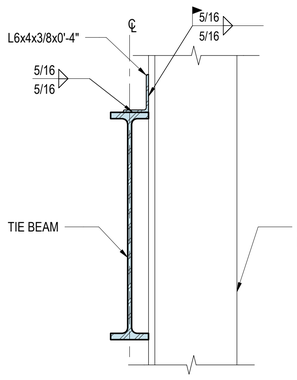

9 PLATE FRAME DETAIL AT TIE BEAM
1" = 1'-0"

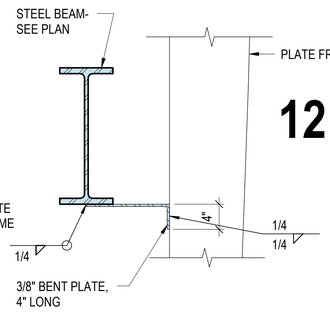

10 Detail -10
1" = 1'-0"

13 HSS SPLICE DETAIL
1 1/2" = 1'-0"

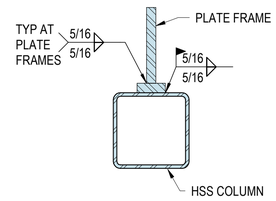

12 PLATE FRAME DETAIL AT TOWER COLUMN
1 1/2" = 1'-0"

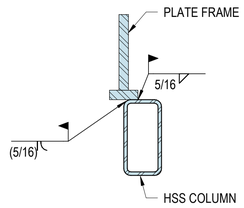

11 PLATE FRAME DETAIL AT TOWER COLUMN
1 1/2" = 1'-0"

NO.	DATE	REVISIONS	DES.	DRW.	CHK.	DCCO	CDOT
4	7/3/2023	ISSUED FOR BID					
2	1/13/2023	ISSUED FOR PERMIT REVISION 2					
1	11/4/2022	ISSUED FOR PERMIT REVISION 1					
0	9/9/2022	ISSUED FOR PERMIT	MC	MW	BY		

DESIGN BY:
DRAWN BY:
CHECKED BY:
APPROVED BY:
CDOT/APPROVED BY:

TRANSYSTEMS
222 SOUTH RIVERSIDE PLAZA SUITE 610
CHICAGO, ILLINOIS 60606

SKIDMORE, OWINGS & MERRILL LLP
224 SOUTH MICHIGAN AVENUE, SUITE 1000
CHICAGO, ILLINOIS 60604

CHICAGO DEPARTMENT OF TRANSPORTATION
DIVISION OF ENGINEERING

STATE / LAKE LOOP ELEVATED STATION
200 NORTH STATE STREET, CHICAGO, IL 60601

DETAIL

SPEC. NO.

DRAWING NO.
S-643

CDOT PROJECT D-1-209

DATE: 9/9/2022

REVISION NO.4

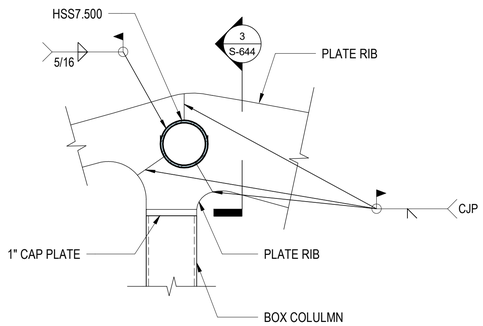

1 PLATE FRAME DETAIL AT FLYOVER BRIDGE
1" = 1'-0"

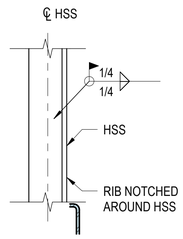

2 PLATE FRAME DETAIL AT ELEVATOR BEAM
1" = 1'-0"

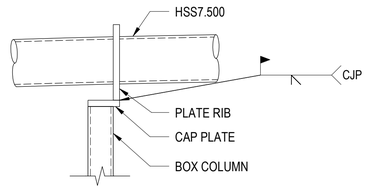

3 PLATE FRAME DETAIL AT FLYOVER BRIDGE
1" = 1'-0"

DESIGN BY:										
DRAWN BY:										
CHECKED BY:		4	7/3/2023	ISSUED FOR BID						
APPROVED BY:		1	11/4/2022	ISSUED FOR PERMIT REVISION 1						
CDOT/APPROVED BY:		0	9/9/2022	ISSUED FOR PERMIT	MC	MW	BY			
		NO.	DATE	REVISIONS	DES.	DRW.	CHK.	DCCO	CDOT	

TRANSYSTEMS
222 SOUTH RIVERSIDE PLAZA SUITE 610
CHICAGO, ILLINOIS 60606

SKIDMORE, OWINGS & MERRILL LLP
224 SOUTH MICHIGAN AVENUE, SUITE 1000
CHICAGO, ILLINOIS 60604

CHICAGO DEPARTMENT
OF TRANSPORTATION
DIVISION OF ENGINEERING

STATE / LAKE LOOP ELEVATED STATION
200 NORTH STATE STREET, CHICAGO, IL 60601

SPEC. NO.

DETAILS

DRAWING NO.
S-644

CDOT PROJECT D-1-209

DATE: 9/9/2022

REVISION NO.4

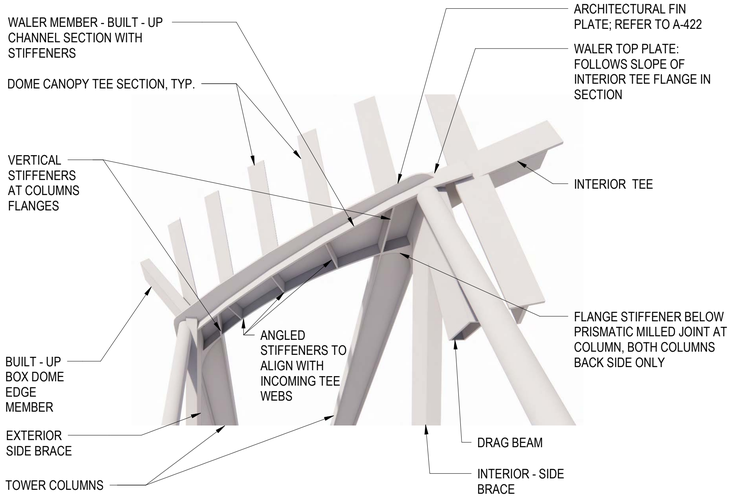

NOTE: ADJACENT ARCHITECTURAL FINS NOT SHOWN FOR CLARITY

1 BACK VIEW OF WALER BEAM ASSEMBLY
3/8" = 1'-0"

NOTE:
A 3-DIMENSIONAL DIGITIAL GEOMETRY FILE FOR THE WALER BEAM MAY BE MADE AVAILABLE TO ASSIST IN THE GEOMETRY DEFINITION OF THIS ELEMENT AND ITS COMPONENTS.

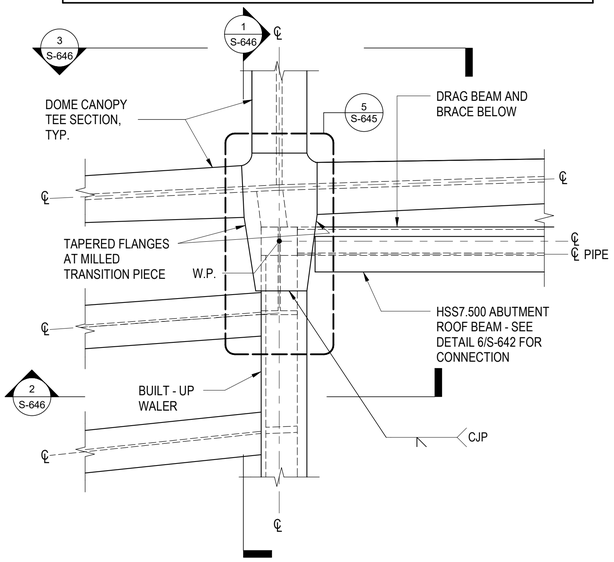

NOTE: REFER TO S-623 AND S-625 FOR WALER WORKPOINT GEOMETRY

4 WALER INTERIOR JOINT PLAN VIEW
3/4" = 1'-0"

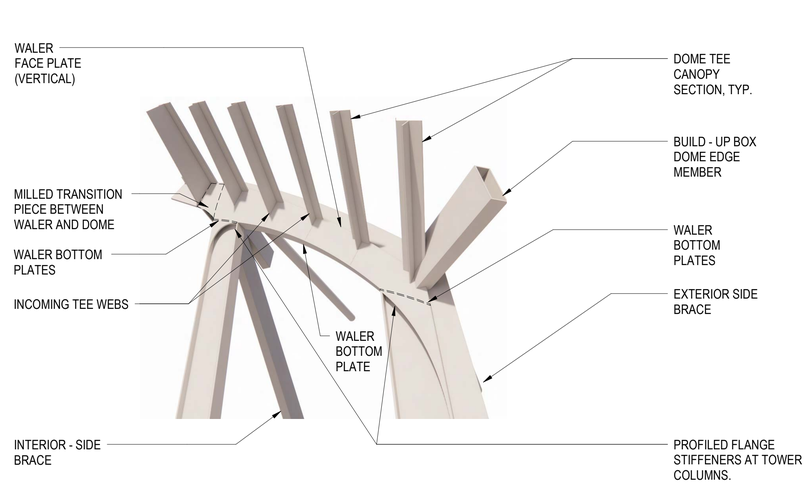

2 FRONT VIEW OF WALER BEAM ASSEMBLY
3/8" = 1'-0"

5 WALER INTERIOR JOINT SECTION
1 1/2" = 1'-0"

NOTE: REFER TO S-623 AND S-625 FOR WALER WORKPOINT GEOMETRY

6 WALER EXTERIOR JOINT PLAN VIEW
3/4" = 1'-0"

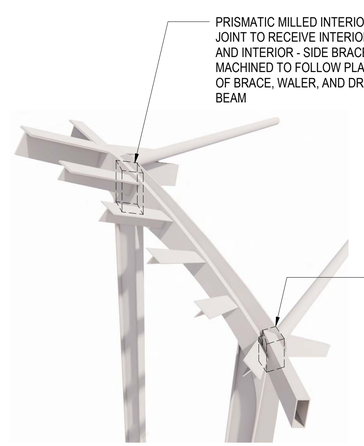

3 FRONT VIEW OF WALER BEAM ASSEMBLY FROM ABOVE
3/8" = 1'-0"

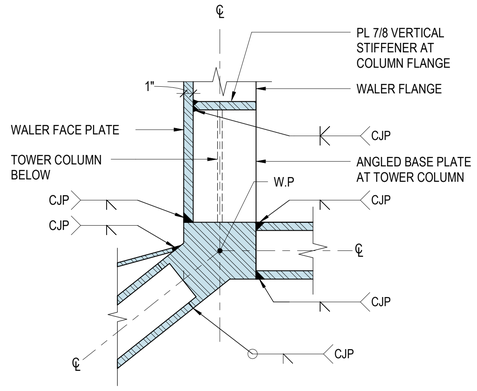

7 WALER EXTERIOR JOINT SECTION
1 1/2" = 1'-0"

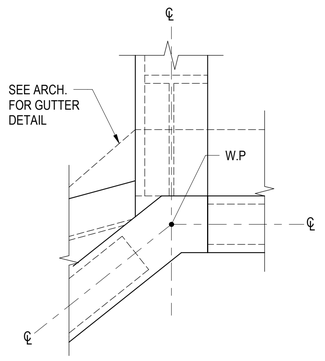

8 WALER EXTERIOR JOINT ENLARGED PLAN
1 1/2" = 1'-0"

NO.	DATE	REVISIONS	DES.	DRW.	CHK.	DCCO	CDOT
4	7/3/2023	ISSUED FOR BID					
0	9/9/2022	ISSUED FOR PERMIT	MC	MW	BY		

DESIGN BY:
DRAWN BY:
CHECKED BY:
APPROVED BY:
CDOT/APPROVED BY:

TRANSYSTEMS
222 SOUTH RIVERSIDE PLAZA SUITE 610
CHICAGO, ILLINOIS 60606

SKIDMORE, OWINGS & MERRILL LLP
224 SOUTH MICHIGAN AVENUE, SUITE 1000
CHICAGO, ILLINOIS 60604

CHICAGO DEPARTMENT OF TRANSPORTATION
DIVISION OF ENGINEERING

STATE / LAKE LOOP ELEVATED STATION
200 NORTH STATE STREET, CHICAGO, IL 60601

SPEC. NO.

DOME CONNECTION TO TOWER DETAILS

DRAWING NO. S-645

CDOT PROJECT D-1-209

DATE: 9/9/2022

REVISION NO.4

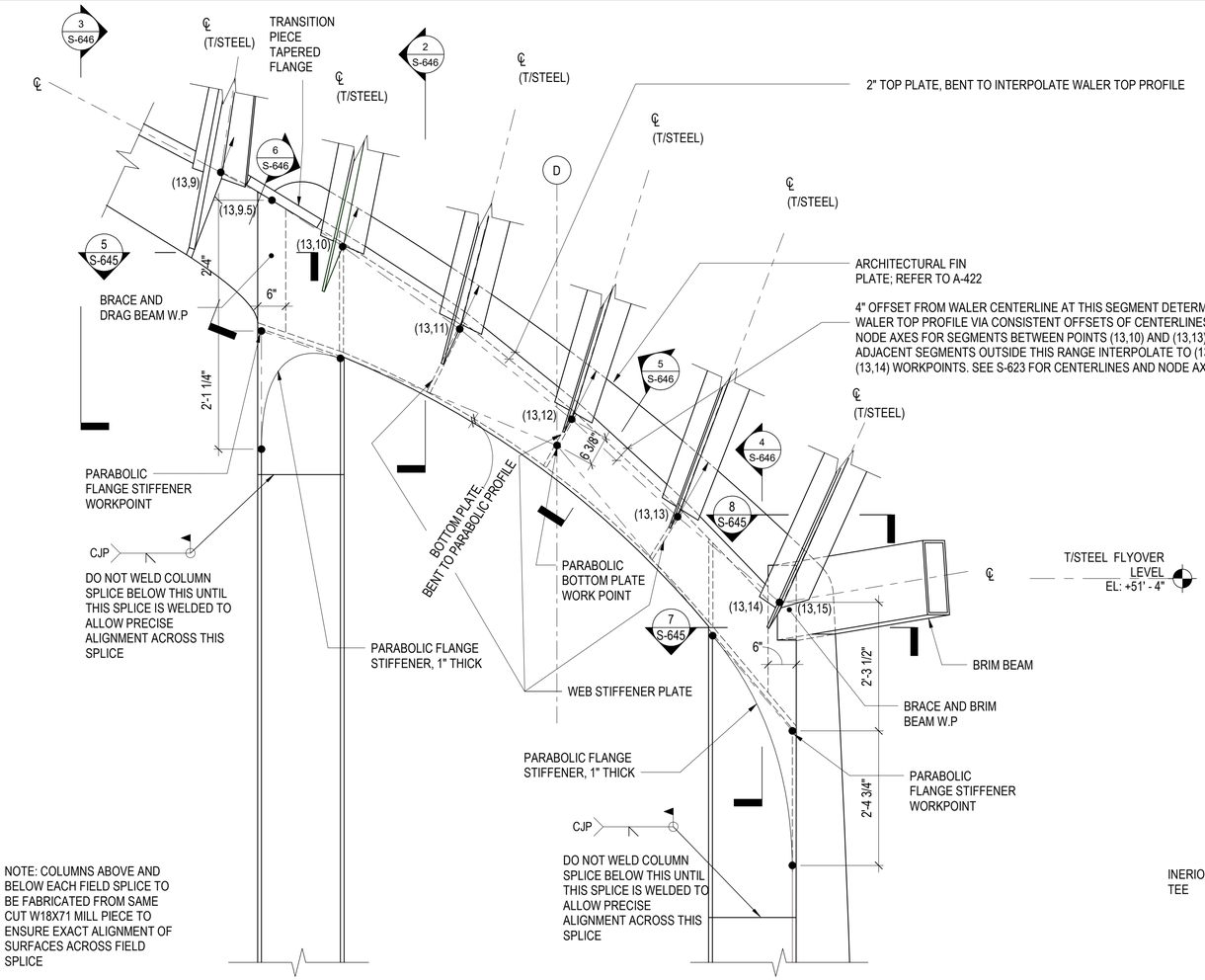

1 WALER ELEVATION
3/4" = 1'-0"

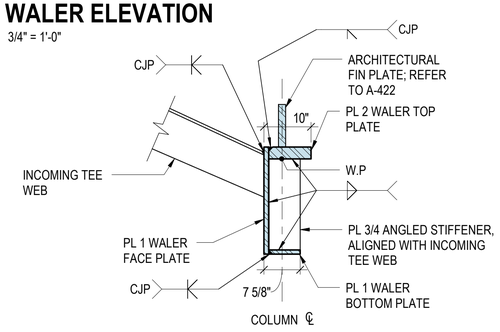

5 WALER SECTION
3/4" = 1'-0"

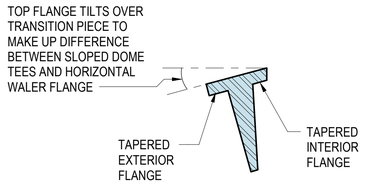

6 MILLED TRANSITION PIECE BETWEEN WALER AND DOME
3/4" = 1'-0"

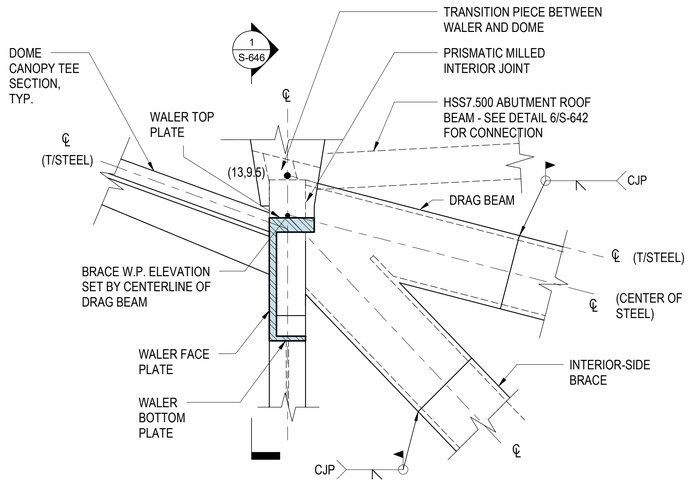

2 INTERIOR JOINT, VIEW FROM WALER SIDE
3/4" = 1'-0"

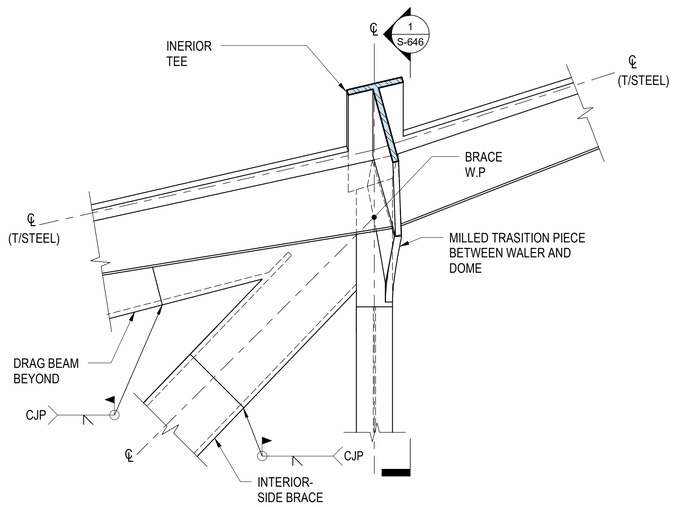

3 INTERIOR JOINT, VIEW FROM DOME SIDE
3/4" = 1'-0"

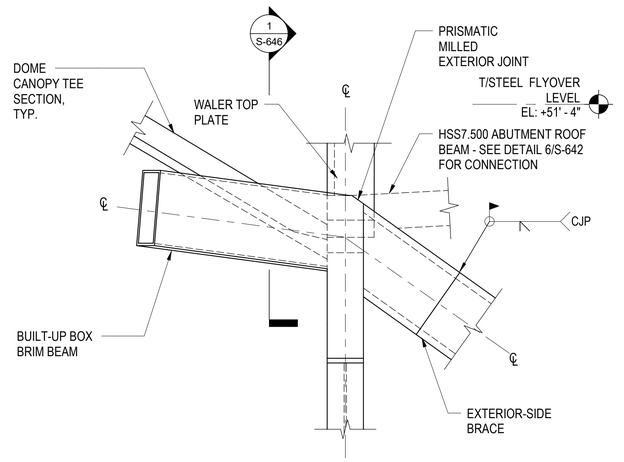

4 EXTERIOR JOINT
3/4" = 1'-0"

DESIGN BY:										
DRAWN BY:										
CHECKED BY:		4	7/3/2023	ISSUED FOR BID						
APPROVED BY:		1	11/4/2022	ISSUED FOR PERMIT REVISION 1						
CDOT/APPROVED BY:		0	9/9/2022	ISSUED FOR PERMIT	MC	MW	BY			
		NO.	DATE	REVISIONS	DES.	DRW.	CHK.	DCCO	CDOT	

TRANSYSTEMS
222 SOUTH RIVERSIDE PLAZA SUITE 610
CHICAGO, ILLINOIS 60606

SKIDMORE, OWINGS & MERRILL LLP
224 SOUTH MICHIGAN AVENUE, SUITE 1000
CHICAGO, ILLINOIS 60604

CHICAGO DEPARTMENT OF TRANSPORTATION
DIVISION OF ENGINEERING

STATE / LAKE LOOP ELEVATED STATION
200 NORTH STATE STREET, CHICAGO, IL 60601

SPEC. NO.

DOME CONNECTION TO TOWER DETAILS

DRAWING NO.
S-646

CDOT PROJECT D-1-209 | DATE: 9/9/2022 | REVISION NO.4

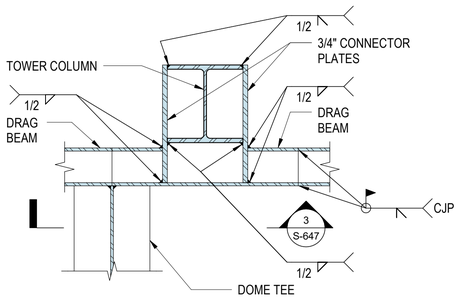

1 DRAG BEAM CONNECTION TO ABUTMENT TOWER MIDDLE COLUMN, PLAN VIEW

1" = 1'-0"

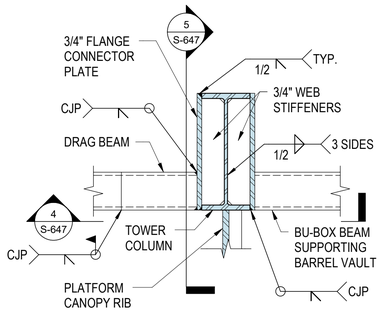

2 DRAG BEAM CONNECTION TO ABUTMENT TOWER END COLUMN, PLAN VIEW

1" = 1'-0"

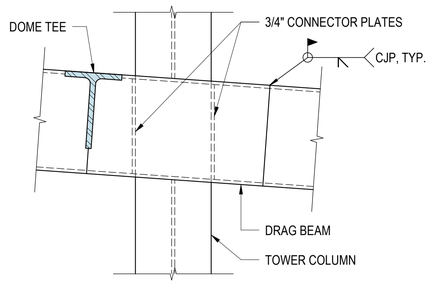

3 DRAG BEAM CONNECTION TO ABUTMENT TOWER MIDDLE COLUMN , ELEVATION VIEW

1" = 1'-0"

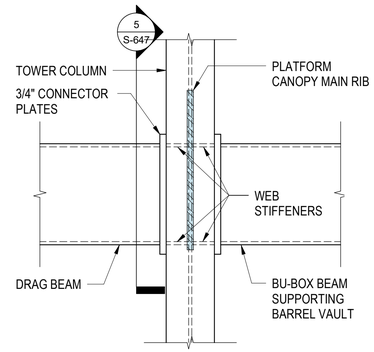

4 DRAG BEAM CONNECTION TO ABUTMENT TOWER END COLUMN, ELEVATION VIEW

1" = 1'-0"

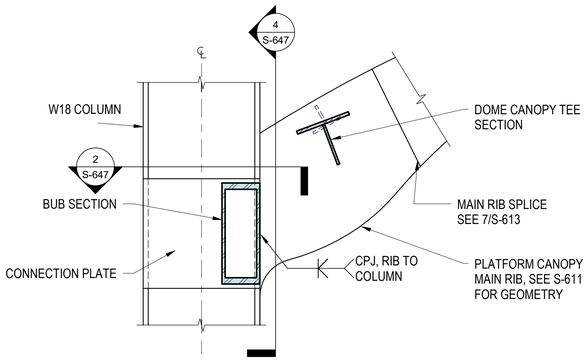

5 MAIN RIB TO COLUMN

1" = 1'-0"

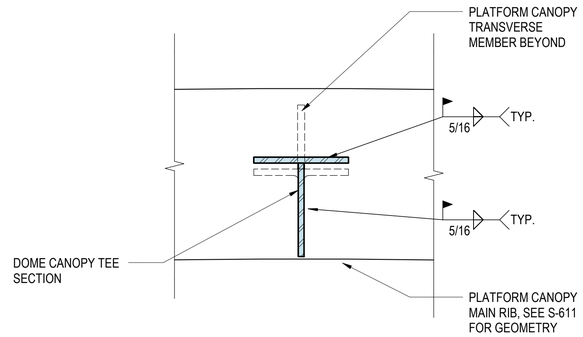

6 TYPICAL DOME CANOPY TEE TO PLATFORM CANOPY RIB

3" = 1'-0"

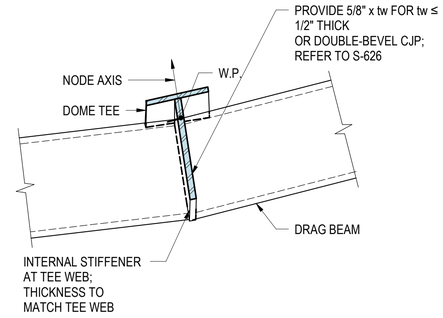

7 CONNECTION OF DOME TEE TO DRAG BEAM, ELEVATION VIEW

1" = 1'-0"

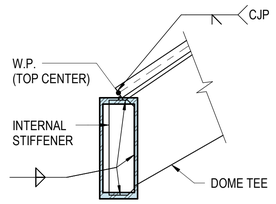

8 CONNECTION OF DOME TEE TO DRAG BEAM, SECTION VIEW

1" = 1'-0"

NO.	DATE	REVISIONS	DES.	DRW.	CHK.	DCCO	CDOT
4	7/3/2023	ISSUED FOR BID					
0	9/9/2022	ISSUED FOR PERMIT	MC	MW	BY		

DESIGN BY:
DRAWN BY:
CHECKED BY:
APPROVED BY:
CDOT/APPROVED BY:

TRANSYSTEMS
222 SOUTH RIVERSIDE PLAZA SUITE 610
CHICAGO, ILLINOIS 60606

SKIDMORE, OWINGS & MERRILL LLP
224 SOUTH MICHIGAN AVENUE, SUITE 1000
CHICAGO, ILLINOIS 60604

CHICAGO DEPARTMENT OF TRANSPORTATION
DIVISION OF ENGINEERING

STATE / LAKE LOOP ELEVATED STATION
200 NORTH STATE STREET, CHICAGO, IL 60601

SPEC. NO.

DOME CONNECTION TO TOWER DETAILS

DRAWING NO. S-647

CDOT PROJECT D-1-209

DATE: 9/9/2022

REVISION NO.4

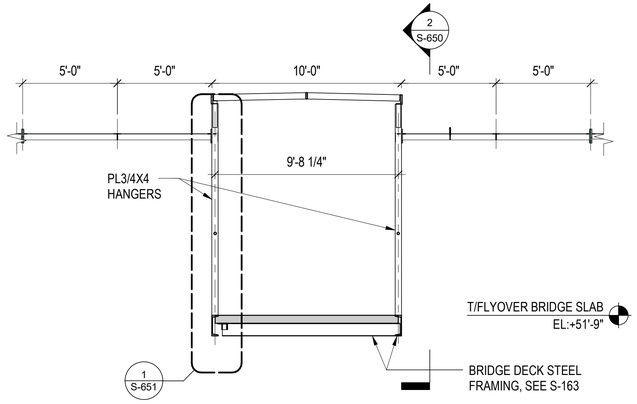

1 SECTION THROUGH FLYOVER BRIDGE
1/4" = 1'-0"

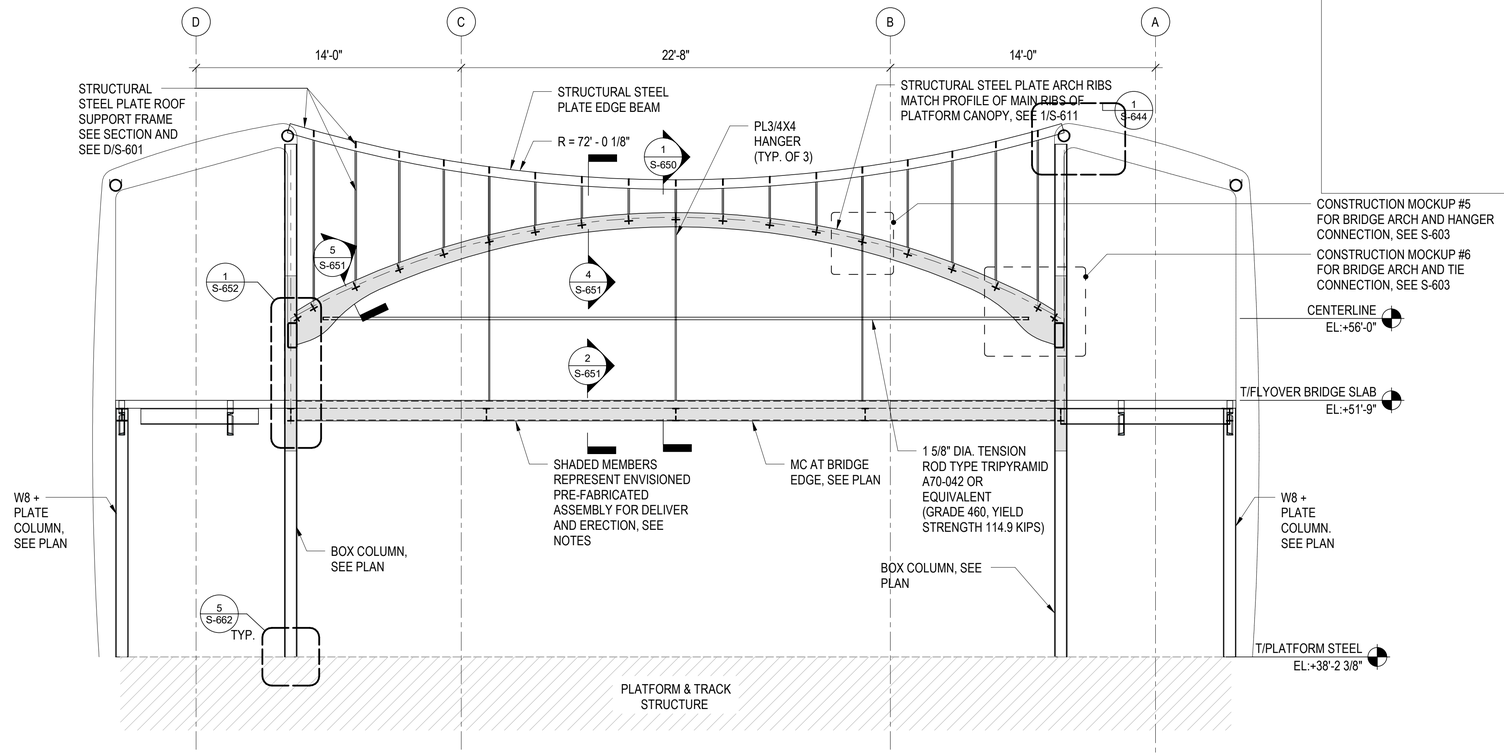

2 FLYOVER BRIDGE ELEVATION
1/4" = 1'-0"

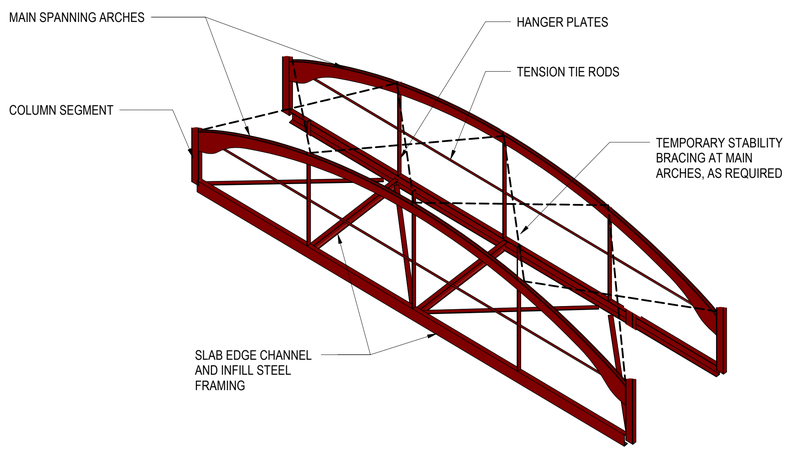

3 PROPOSED FLY-OVER BRIDGE PRE-FABRICATED ASSEMBLY FOR LIFTING

FLYOVER BRIDGE NOTES:

1. THE BRIDGE STRUCTURE IS ENVISIONED TO BE PARTIALLY CONSTRUCTED OFF-SITE IN PREFABRICATED SUBASSEMBLIES. THE ENVISIONED INCLUDES THE MAIN STRUCTURAL ELEMENTS OF EACH VERTICAL FACE OF THE BRIDGE; THE BUILT-UP STRUCTURAL STEEL ARCH MEMBER, THE STRUCTURAL STEEL HANGER PLATES, THE STRUCTURAL STEEL TIE ROD WHICH RUNS THROUGH THE HANGER PLATES, AND THE CHANNEL SECTION COMPRISING THE EDGE OF THE WALKING DECK. THE PREFABRICATED STRUCTURAL STEEL ARCH MEMBER MAY INCLUDE A SEGMENT OF THE BUILT-UP STRUCTURAL STEEL BOX COLUMN AT EACH END. REFER TO DETAIL 3, THIS SHEET, FOR DIAGRAM.
2. THE TWO MAIN SPANNING ARCHES OF THE FLY-OVER BRIDGE, CONSTRUCTED FROM A PAIR OF PARALLEL PLATES (SEE S-651) ARE NOT STABLE UNTIL THE 'PLATE FRAME BRIDGE ROOF STRUCTURE' (SEE D/S-601) CONSISTING OF THE TRANSVERSE PLATE FRAMES AND BRIDGE ROOF FRAMING, IS FULLY INSTALLED AND CONNECTED TO THE ARCH PLATES (SEE DETAIL 4/S-651). PRIOR TO INSTALLATION OF THE PLATE FRAME BRIDGE ROOF STRUCTURE, TEMPORARY BRACING MAY BE REQUIRED TO STABILIZE THE ARCHES DURING TRANSPORT AND ERECTION, SUBJECT TO THE CONTRACTOR'S PROPOSED MEANS OF CONSTRUCTION.
3. THE CONTRACTOR SHALL DEVELOP A COMPLETE FABRICATION, TRANSPORTATION AND ERECTION METHODS STATEMENT, FOR REVIEW BY THE ARCHITECT, ENGINEER AND COMMISSIONER, PRIOR TO FABRICATION. THE CONTRACTOR'S METHOD STATEMENT SHALL ADDRESS THE INTENDED MEANS FOR FABRICATION OF THE INDIVIDUAL MEMBERS, INCLUDING FIT-UP, TO THE PRESCRIBED TOLERANCES.
4. THE CONTRACTOR'S METHODS STATEMENT SHALL INCLUDE, IF REQUIRED, TEMPORARY JIGS, SUPPORT FRAMES, OR OTHER TEMPORARY SYSTEMS, TO MAINTAIN GEOMETRY AND STABILITY DURING TRANSPORTATION AND HANDLING OF THE BRIDGE STRUCTURE.

		NO.	DATE	REVISIONS	DES.	DRW.	CHK.	DCCO	CDOT
DESIGN BY:									
DRAWN BY:									
CHECKED BY:		4	7/3/2023	ISSUED FOR BID					
APPROVED BY:		1	11/4/2022	ISSUED FOR PERMIT REVISION 1					
CDOT/APPROVED BY:		0	9/9/2022	ISSUED FOR PERMIT	MC	MW	BY		

TRANSYSTEMS
222 SOUTH RIVERSIDE PLAZA SUITE 610
CHICAGO, ILLINOIS 60606

SKIDMORE, OWINGS & MERRILL LLP
224 SOUTH MICHIGAN AVENUE, SUITE 1000
CHICAGO, ILLINOIS 60604

CHICAGO DEPARTMENT
OF TRANSPORTATION
DIVISION OF ENGINEERING

STATE / LAKE LOOP ELEVATED STATION
200 NORTH STATE STREET, CHICAGO, IL 60601

SPEC. NO.

FLYOVER BRIDGE ELEVATIONS

DRAWING NO.
S-650

CDOT PROJECT D-1-209

DATE: 9/9/2022

REVISION NO.4

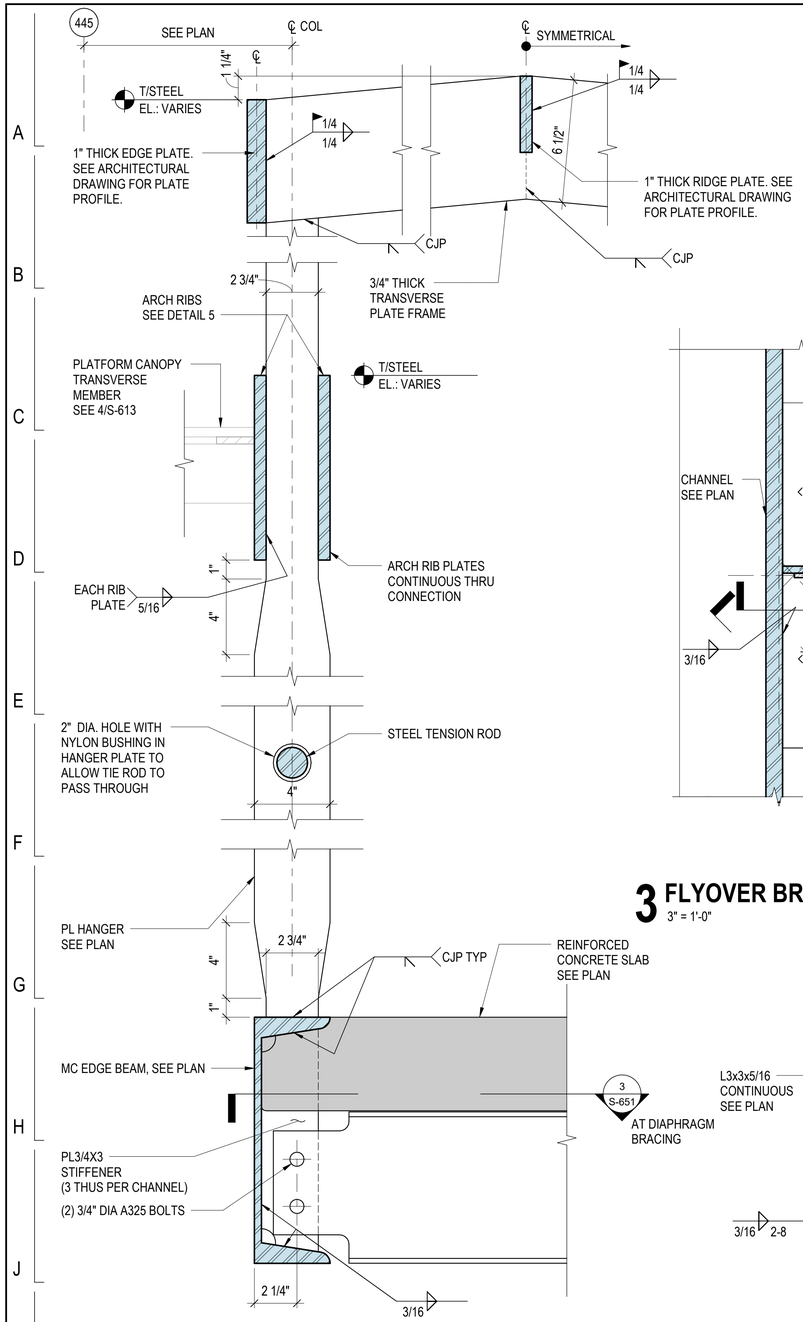

1 FLYOVER BRIDGE HANGER DETAIL
3" = 1'-0"

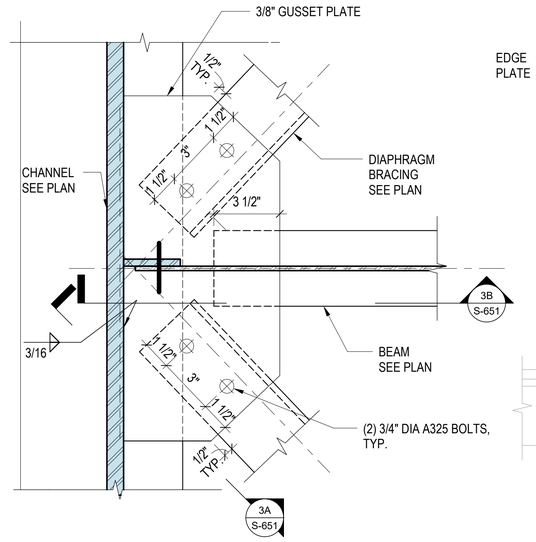

2 FLYOVER BRIDGE SLAB EDGE DETAIL
3" = 1'-0"

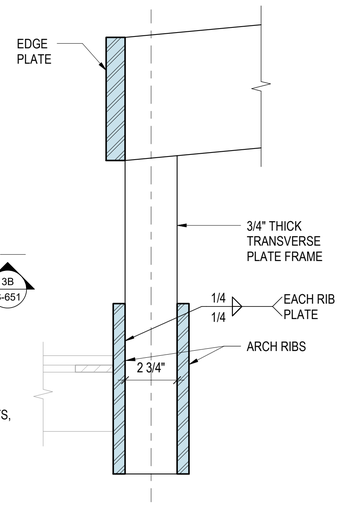

3A SECTION
3" = 1'-0"

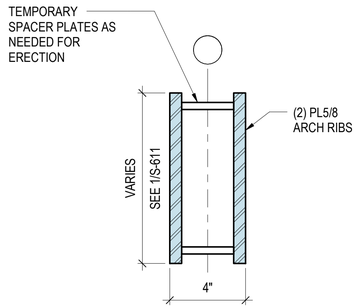

3B SECTION
3" = 1'-0"

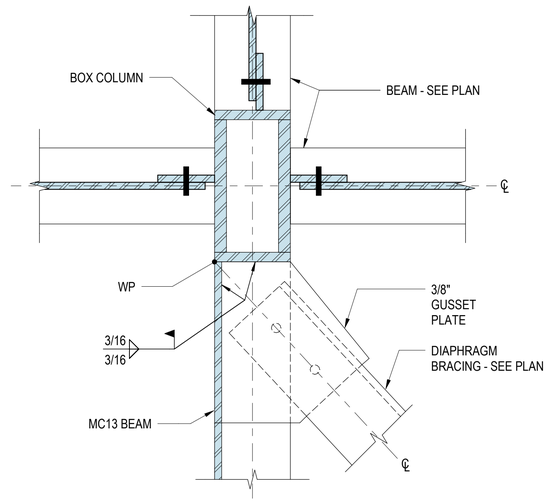

NOTE: SEE DETAIL 3 FOR ADDITIONAL INFORMATION.

3 FLYOVER BRIDGE BRACE DETAIL PLAN
3" = 1'-0"

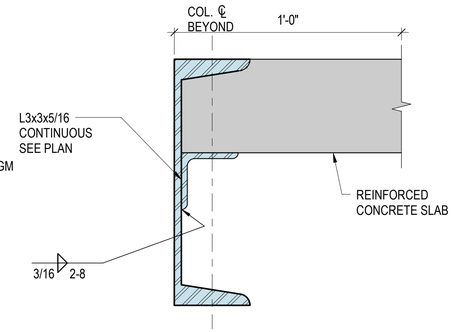

4 FLYOVER BRIDGE ROOF FRAME DETAIL
3" = 1'-0"

NOTE:
1. SEE DETAIL 1 FOR ADDITIONAL INFORMATION.

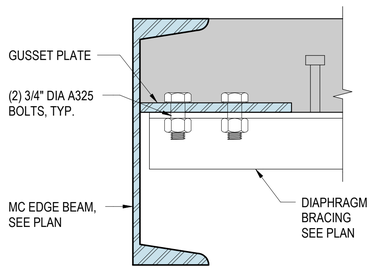

5 ARCH SECTION
3" = 1'-0"

6 BRACE DETAIL
3" = 1'-0"

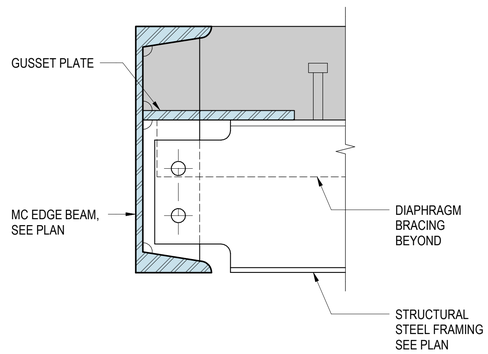

NO.	DATE	REVISIONS	DES.	DRW.	CHK.	DCCO	CDOT
4	7/3/2023	ISSUED FOR BID					
0	9/9/2022	ISSUED FOR PERMIT	MC	MW	BY		

DESIGN BY:
DRAWN BY:
CHECKED BY:
APPROVED BY:
CDOT/APPROVED BY:

TRANSYSTEMS
222 SOUTH RIVERSIDE PLAZA SUITE 610
CHICAGO, ILLINOIS 60606

SKIDMORE, OWINGS & MERRILL LLP
224 SOUTH MICHIGAN AVENUE, SUITE 1000
CHICAGO, ILLINOIS 60604

CHICAGO DEPARTMENT OF TRANSPORTATION
DIVISION OF ENGINEERING

STATE / LAKE LOOP ELEVATED STATION
200 NORTH STATE STREET, CHICAGO, IL 60601

FLYOVER BRIDGE DETAILS

SPEC. NO.

DRAWING NO. S-651

CDOT PROJECT D-1-209 | DATE: 9/9/2022 | REVISION NO.4

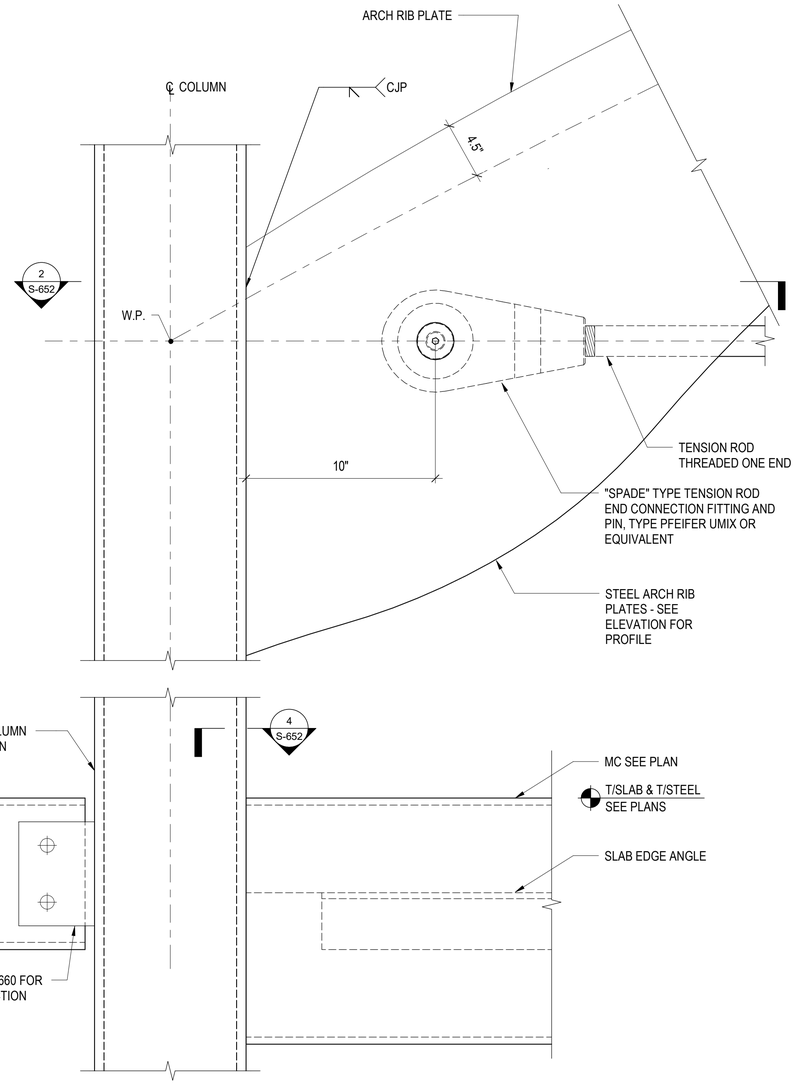

1 BRIDGE END CONNECTION DETAIL
3" = 1'-0"

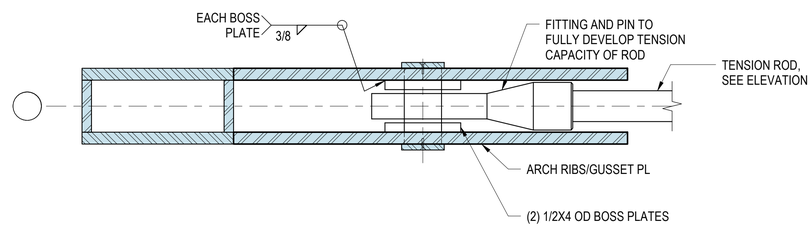

2 BRIDGE END CONNECTION DETAIL PLAN SECTION
3" = 1'-0"

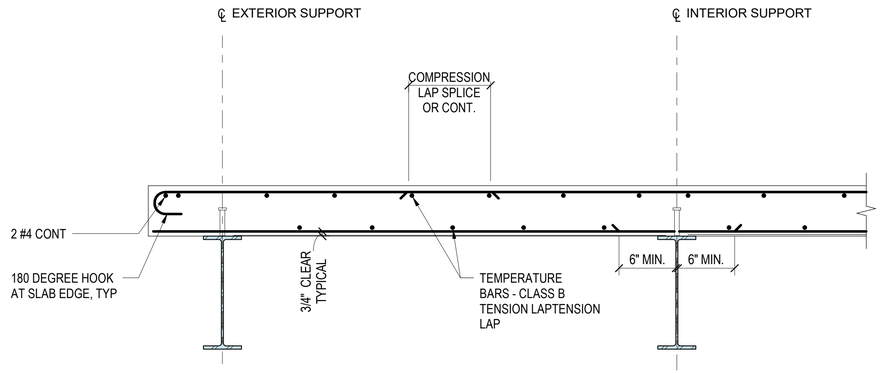

3 TYPICAL REINFORCED CONCRETE SLAB DETAIL
NOT TO SCALE

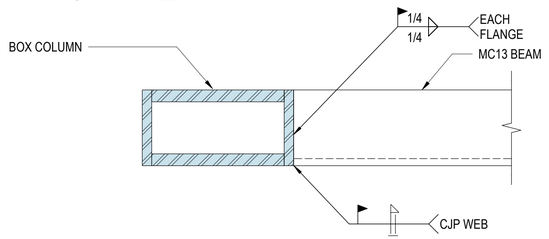

4 MC13 TO COLUMN CONNECTION DETAIL
3" = 1'-0"

NO.	DATE	REVISIONS	DES.	DRW.	CHK.	DCCO	CDOT
4	7/3/2023	ISSUED FOR BID					
1	11/4/2022	ISSUED FOR PERMIT REVISION 1					
0	9/9/2022	ISSUED FOR PERMIT	MC	MW	BY		

DESIGN BY:
DRAWN BY:
CHECKED BY:
APPROVED BY:
CDOT/APPROVED BY:

TRANSYSTEMS
222 SOUTH RIVERSIDE PLAZA SUITE 610
CHICAGO, ILLINOIS 60606

SKIDMORE, OWINGS & MERRILL LLP
224 SOUTH MICHIGAN AVENUE, SUITE 1000
CHICAGO, ILLINOIS 60604

CHICAGO DEPARTMENT
OF TRANSPORTATION
DIVISION OF ENGINEERING

STATE / LAKE LOOP ELEVATED STATION
200 NORTH STATE STREET, CHICAGO, IL 60601

SPEC. NO.

FLYOVER BRIDGE DETAILS

DRAWING NO.
S-652

CDOT PROJECT D-1-209

DATE: 9/9/2022

REVISION NO.4

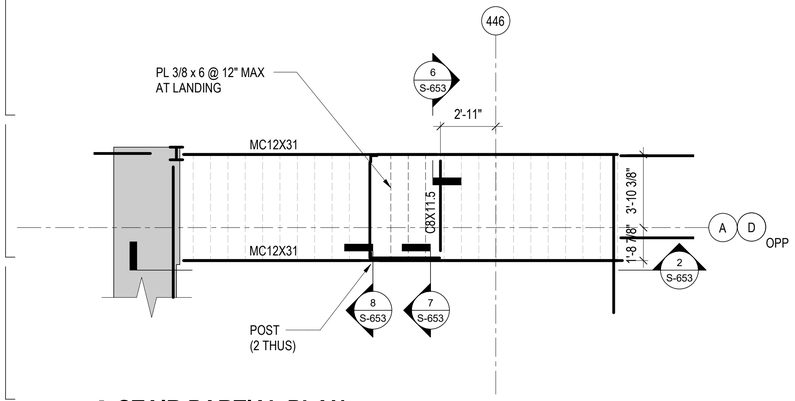

1 STAIR PARTIAL PLAN
1/4" = 1'-0"

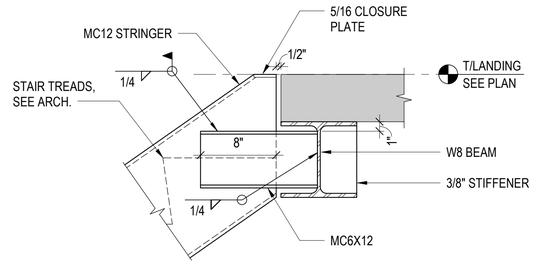

3 TOP OF STAIR STRINGER DETAIL
NOT TO SCALE

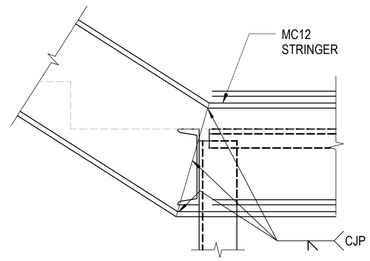

4 STRINGER DETAIL
1 1/2" = 1'-0"

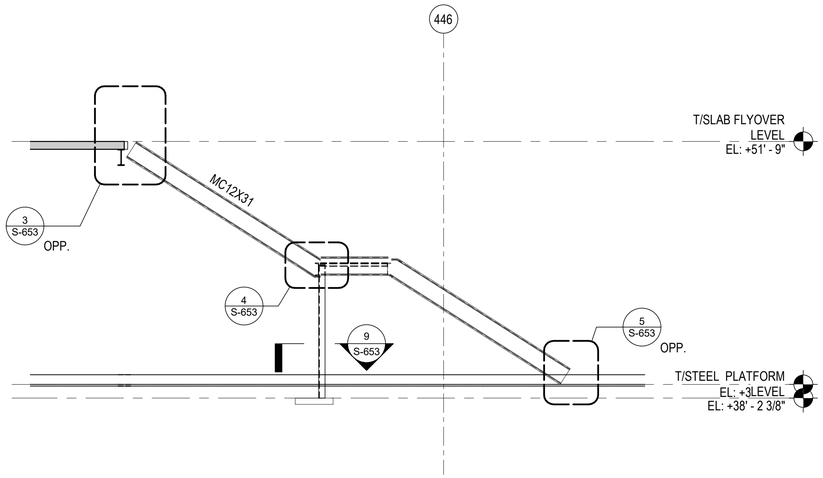

2 STAIR SECTION
1/4" = 1'-0"

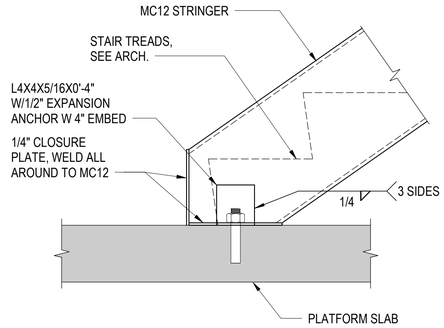

5 BASE OF STAIR STRINGER DETAIL
NOT TO SCALE

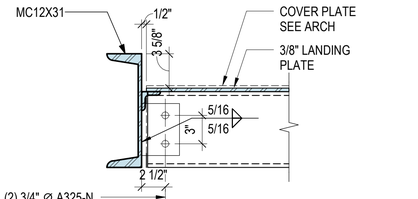

6 STAIR LANDING DETAIL
NOT TO SCALE

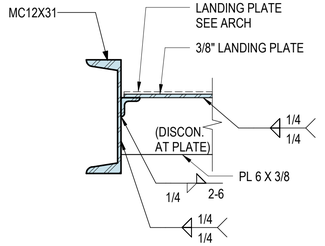

7 LANDING SUPPORT DETAIL
NOT TO SCALE

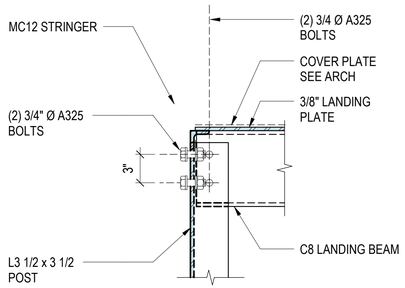

8 STAIR POST CONNECTION DETAIL
NOT TO SCALE

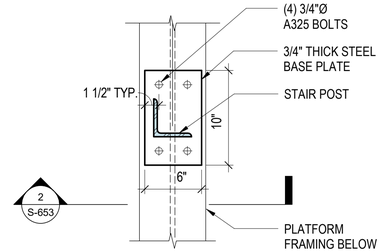

9 STAIR POST BASE PLATE DETAIL
1 1/2" = 1'-0"

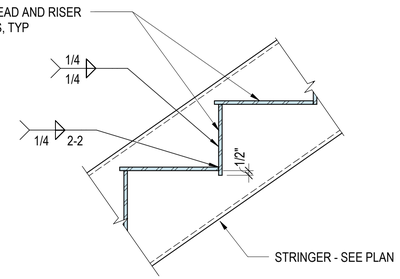

NOTE: SEE ARCH. DWGS FOR TREAD AND RISER DIMENSIONS

10 TREAD AND RISER PLATE DETAIL
NOT TO SCALE

DESIGN BY:										
DRAWN BY:										
CHECKED BY:		4	7/3/2023	ISSUED FOR BID						
APPROVED BY:		1	11/4/2022	ISSUED FOR PERMIT REVISION 1						
CDOT/APPROVED BY:		0	9/9/2022	ISSUED FOR PERMIT	MC	MW	BY			
		NO.	DATE	REVISIONS	DES.	DRW.	CHK.	DCCO	CDOT	

TranSystems
TRANSYSTEMS
222 SOUTH RIVERSIDE PLAZA SUITE 610
CHICAGO, ILLINOIS 60606

SOM
SKIDMORE, OWINGS & MERRILL LLP
224 SOUTH MICHIGAN AVENUE, SUITE 1000
CHICAGO, ILLINOIS 60604

CDOT
CHICAGO DEPARTMENT
OF TRANSPORTATION
DIVISION OF ENGINEERING

STATE / LAKE LOOP ELEVATED STATION
200 NORTH STATE STREET, CHICAGO, IL 60601

STAIR DETAILS

CDOT PROJECT D-1-209

DATE: 9/9/2022

SPEC. NO.

DRAWING NO.
S-653

REVISION NO.4

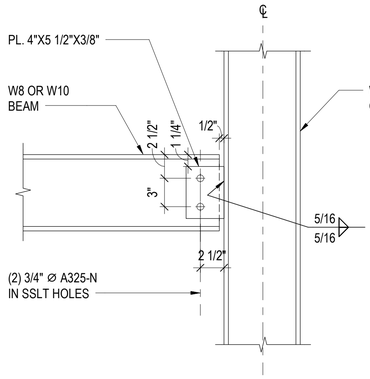

1 TYPICAL BEAM SHEAR CONNECTION TO COLUMN FLANGE
NOT TO SCALE

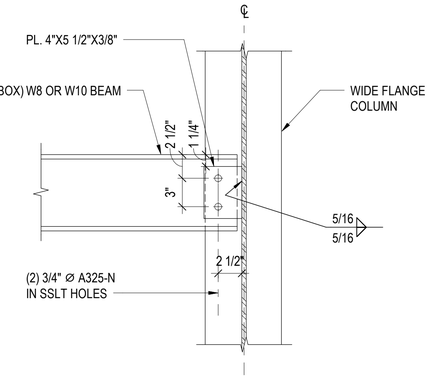

2 TYPICAL BEAM SHEAR CONNECTION TO COLUMN WEB
NOT TO SCALE

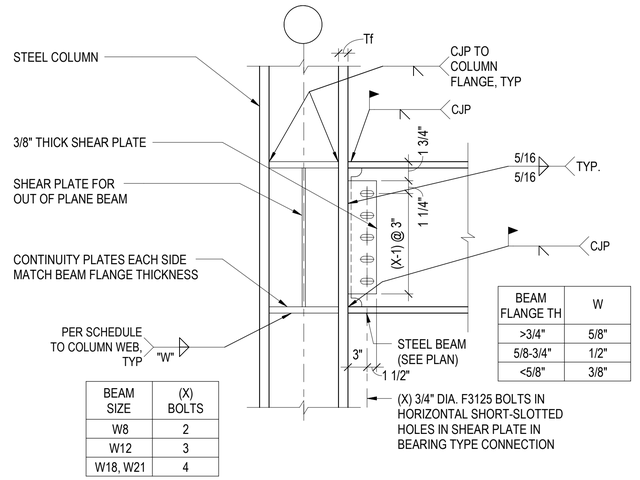

BEAM SIZE	(X) BOLTS
W8	2
W12	3
W18, W21	4

BEAM FLANGE TH	W
>3/4"	5/8"
5/8-3/4"	1/2"
<5/8"	3/8"

3 TYPICAL WELDED BEAM TO COLUMN FLANGE MOMENT CONNECTION
NOT TO SCALE

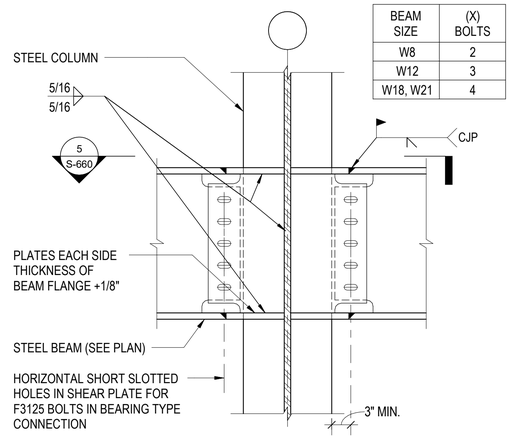

BEAM SIZE	(X) BOLTS
W8	2
W12	3
W18, W21	4

4 TYPICAL WELDED BEAM TO COLUMN WEB MOMENT CONNECTION
NOT TO SCALE

BEAM FLANGE TH	W
>3/4"	5/8"
5/8-3/4"	1/2"
<5/8"	3/8"

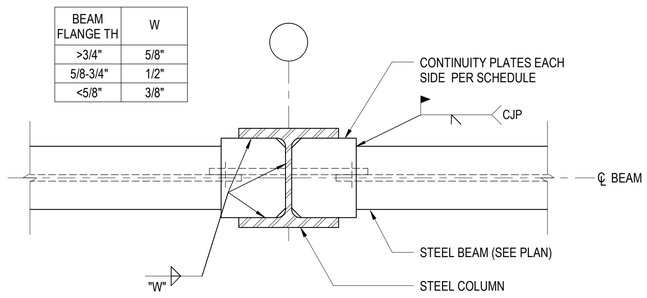

5 TYPICAL WELDED BEAM TO COLUMN WEB MOMENT CONNECTION - PLAN VIEW
NOT TO SCALE

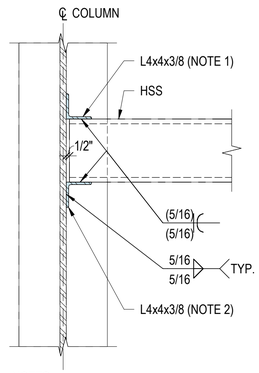

NOTES:
1. RESTRAINT ANGLE LENGTH = HSS WIDTH - 1"
2. SEAT ANGLE LENGTH = HSS WIDTH + 1"

6 TYPICAL HSS SHEAR CONNECTION TO COLUMN WEB
1" = 1'-0"

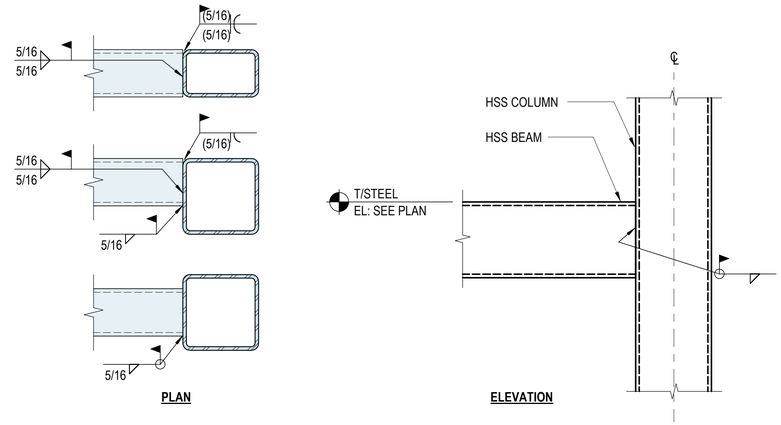

7 HSS BEAM TO HSS COLUMN MOMENT CONNECTION
NOT TO SCALE

DESIGN BY:										
DRAWN BY:										
CHECKED BY:										
APPROVED BY:		4	7/3/2023	ISSUED FOR BID						
		0	9/9/2022	ISSUED FOR PERMIT	MC	MW	BY			
CDOT/APPROVED BY:		NO.	DATE	REVISIONS	DES.	DRW.	CHK.	DCCO	CDOT	

TRANSYSTEMS
222 SOUTH RIVERSIDE PLAZA SUITE 610
CHICAGO, ILLINOIS 60606

SKIDMORE, OWINGS & MERRILL LLP
224 SOUTH MICHIGAN AVENUE, SUITE 1000
CHICAGO, ILLINOIS 60604

CHICAGO DEPARTMENT
OF TRANSPORTATION
DIVISION OF ENGINEERING

STATE / LAKE LOOP ELEVATED STATION
200 NORTH STATE STREET, CHICAGO, IL 60601

STEEL DETAILS

CDOT PROJECT D-1-209

DATE: 9/9/2022

SPEC. NO.

DRAWING NO.
S-660

REVISION NO.4

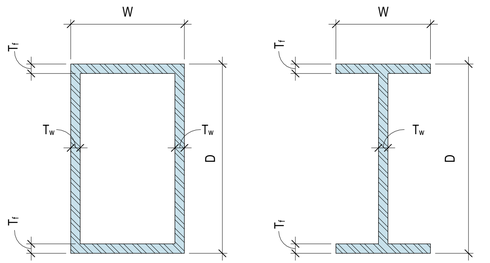

'BUB' SECTIONS

BUILT-UP BOX SECTIONS ARE NOTED ON THE PLANS AND ELEVATIONS AS SUCH:

BUB D" x W" x T_f" x T_w"

'BUH' SECTIONS

BUILT-UP 'H' SECTIONS ARE NOTED ON THE PLANS AND ELEVATIONS AS SUCH:

BUH D" x W" x T_f" x T_w"

1 BUILT-UP STRUCTURAL STEEL SECTION DETAILS

NOT TO SCALE

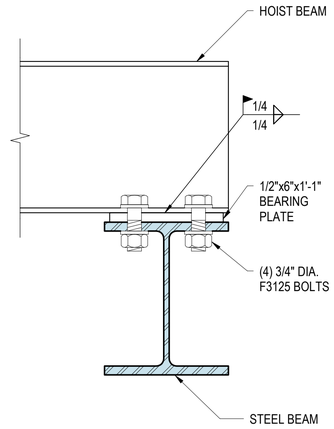

2 HOIST BEAM DETAIL

3" = 1'-0"

DESIGN BY:										
DRAWN BY:										
CHECKED BY:										
APPROVED BY:		4	7/3/2023	ISSUED FOR BID						
		0	9/9/2022	ISSUED FOR PERMIT	MC	MW	BY			
CDOT/APPROVED BY:		NO.	DATE	REVISIONS	DES.	DRW.	CHK.	DCCO	CDOT	

TRANSYSTEMS
222 SOUTH RIVERSIDE PLAZA SUITE 610
CHICAGO, ILLINOIS 60606

SKIDMORE, OWINGS & MERRILL LLP
224 SOUTH MICHIGAN AVENUE, SUITE 1000
CHICAGO, ILLINOIS 60604

CHICAGO DEPARTMENT OF TRANSPORTATION
DIVISION OF ENGINEERING

STATE / LAKE LOOP ELEVATED STATION
200 NORTH STATE STREET, CHICAGO, IL 60601

STEEL DETAILS

CDOT PROJECT D-1-209

DATE: 9/9/2022

SPEC. NO.

DRAWING NO. S-661

REVISION NO.4

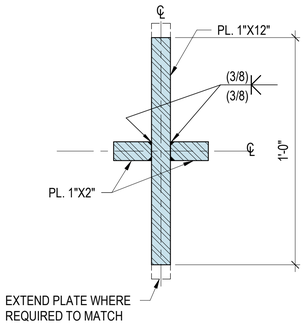

1 BUILT-UP COLUMN C1
3" = 1'-0"

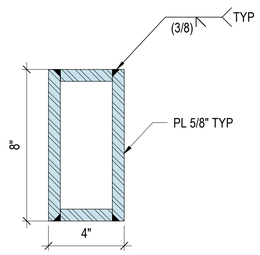

2 BUILT-UP COLUMN C2
3" = 1'-0"

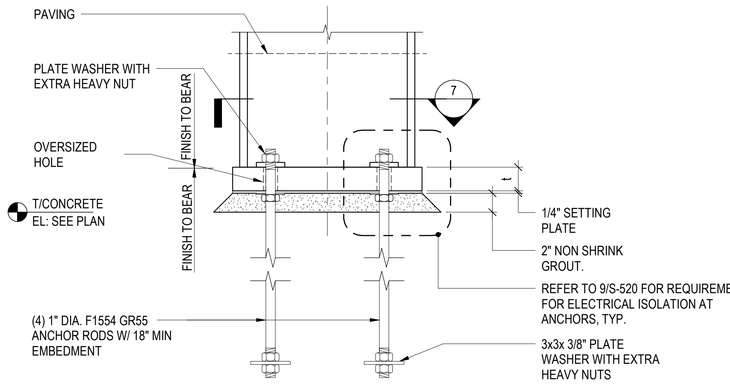

3 TYPICAL BASE PLATE AT CONCRETE FOUNDATION ELEVATION
1 1/2" = 1'-0"

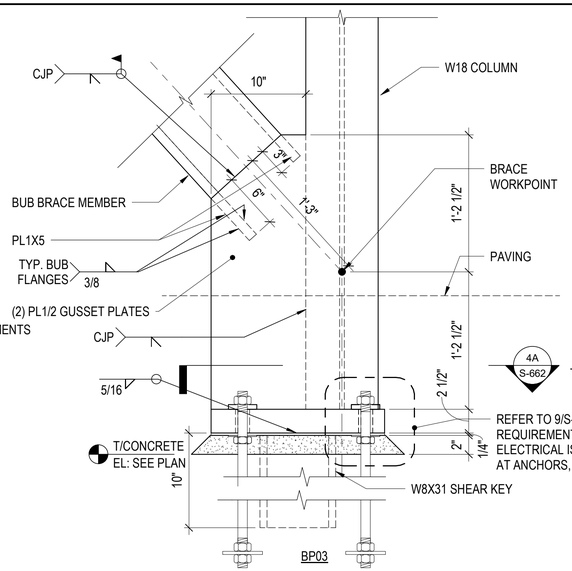

NOTE: SEE DETAIL 3 FOR ADDITIONAL INFORMATION.

4 BASE PLATE AT TOWER BRACE
1 1/2" = 1'-0"

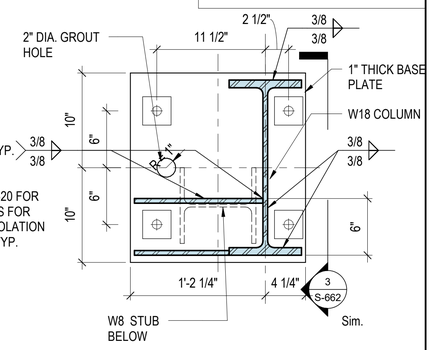

4A COLUMN BASE PLATE DETAIL
1 1/2" = 1'-0"

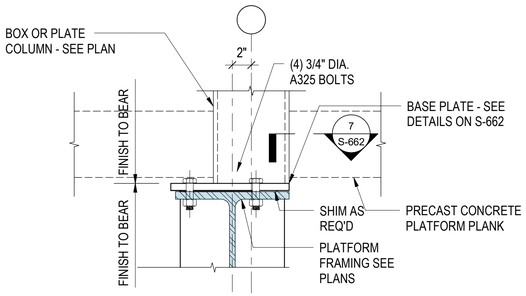

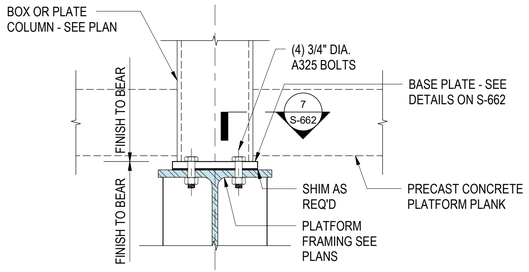

TYPICAL BASE PLATE AT PLATFORM FRAMING ELEVATION
5
1 1/2" = 1'-0"

TYPICAL OFFSET BASE PLATE AT PLATFORM FRAMING ELEVATION
6
1 1/2" = 1'-0"

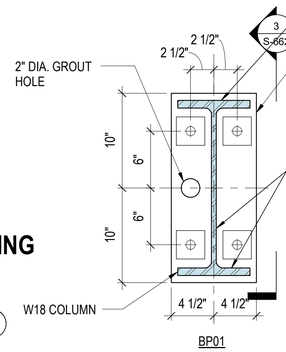

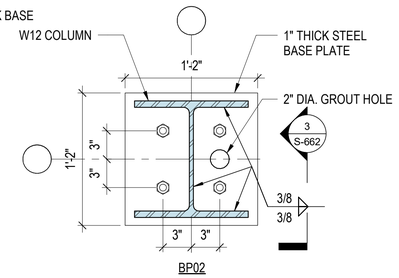

NOTES:
1. SEE DETAIL 1 FOR ADDITIONAL INFORMATION.

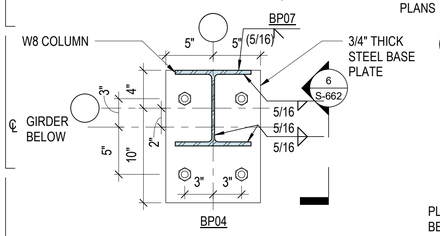

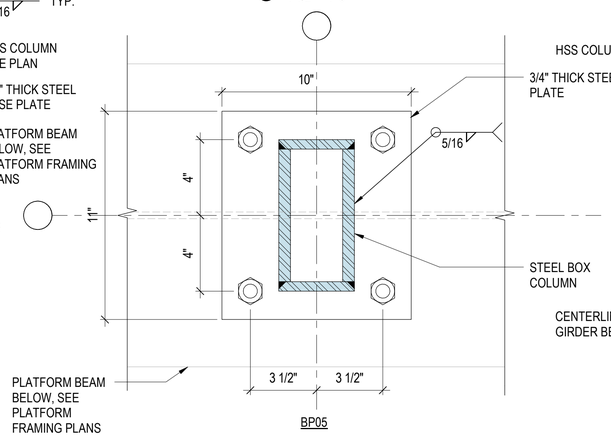

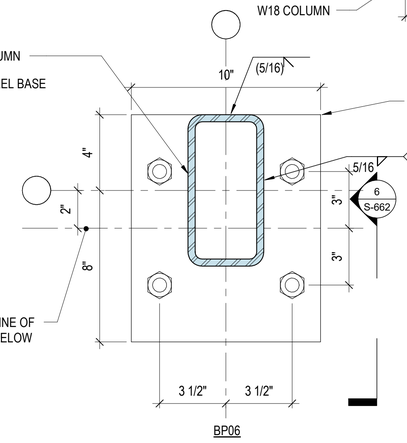

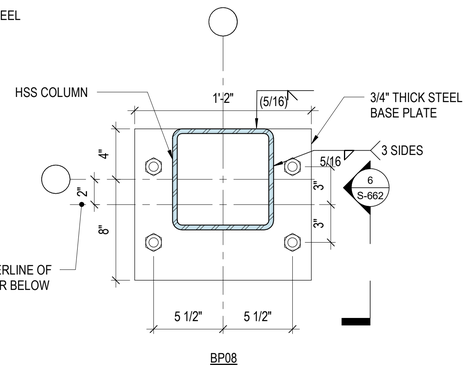

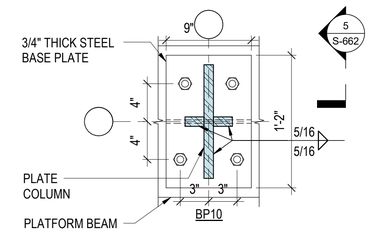

7 COLUMN BASE PLATE DETAILS
1 1/2" = 1'-0"

DESIGN BY:										
DRAWN BY:										
CHECKED BY:		4	7/3/2023	ISSUED FOR BID						
APPROVED BY:		1	11/4/2022	ISSUED FOR PERMIT REVISION 1						
CDOT/APPROVED BY:		0	9/9/2022	ISSUED FOR PERMIT	MC	MW	BY			
		NO.	DATE	REVISIONS	DES.	DRW.	CHK.	DCCO	CDOT	

TRANSYSTEMS
222 SOUTH RIVERSIDE PLAZA SUITE 610
CHICAGO, ILLINOIS 60606

SKIDMORE, OWINGS & MERRILL LLP
224 SOUTH MICHIGAN AVENUE, SUITE 1000
CHICAGO, ILLINOIS 60604

CHICAGO DEPARTMENT OF TRANSPORTATION
DIVISION OF ENGINEERING

STATE / LAKE LOOP ELEVATED STATION
200 NORTH STATE STREET, CHICAGO, IL 60601

SPEC. NO.

STEEL DETAILS

DRAWING NO.
S-662

CDOT PROJECT D-1-209 | DATE: 9/9/2022 | REVISION NO.4

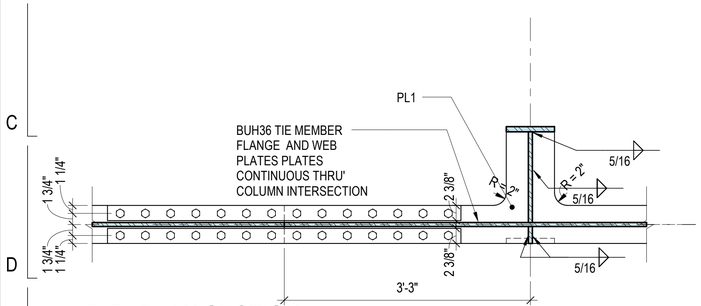

1A PLAN SECTION
1" = 1'-0"

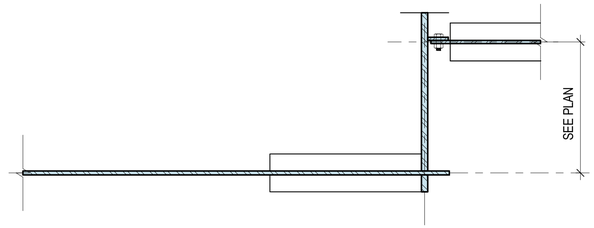

2B PLAN SECTION
1" = 1'-0"

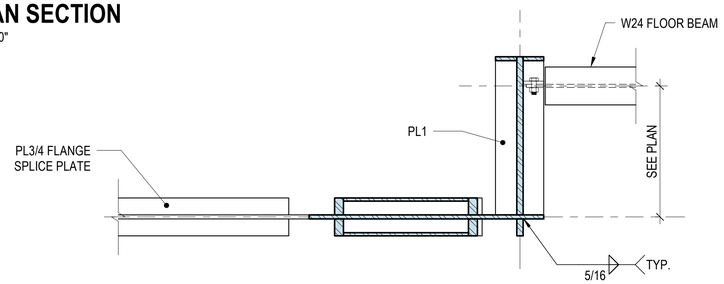

2A PLAN SECTION
1" = 1'-0"

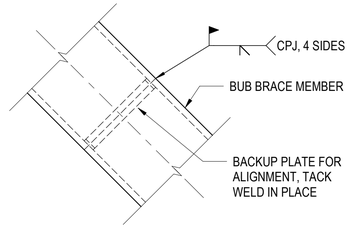

5 BRACE SPLICE DETAIL
1" = 1'-0"

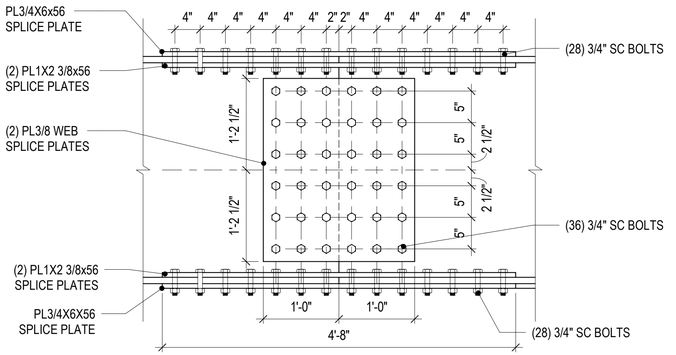

4 TIE SPLICE DETAIL
1" = 1'-0"

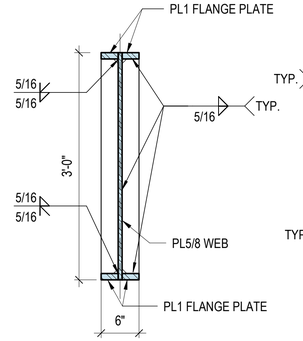

3 TIE SECTION
1" = 1'-0"

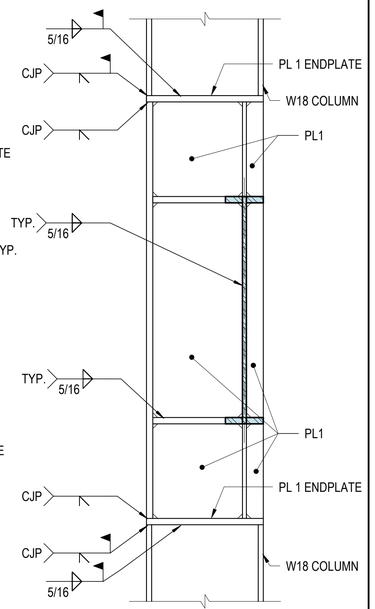

6 TIE SECTION
1" = 1'-0"

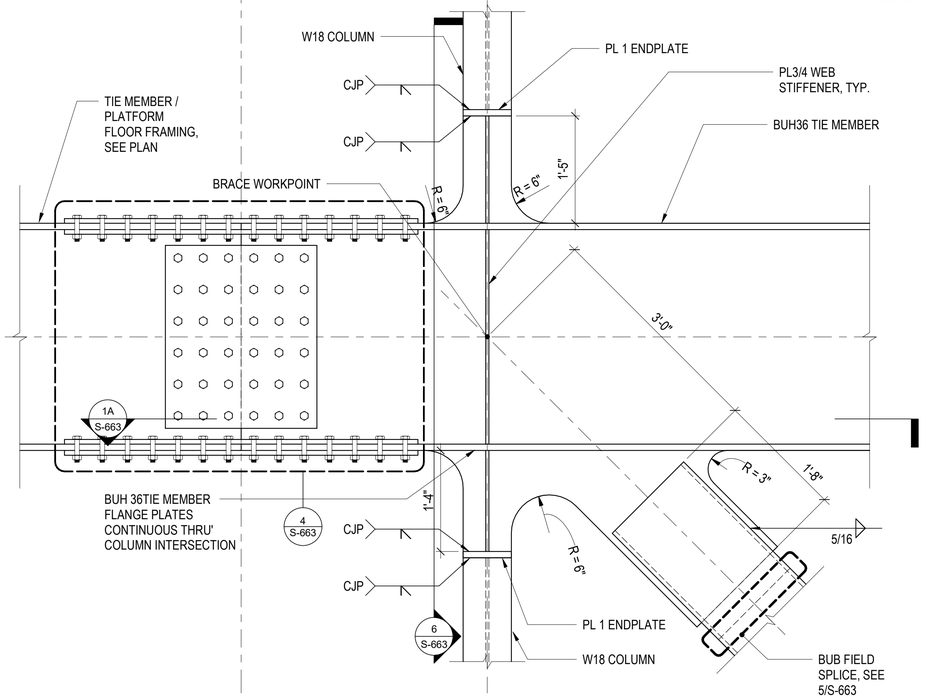

1 TIE DETAIL AT PLATFORM
1" = 1'-0"

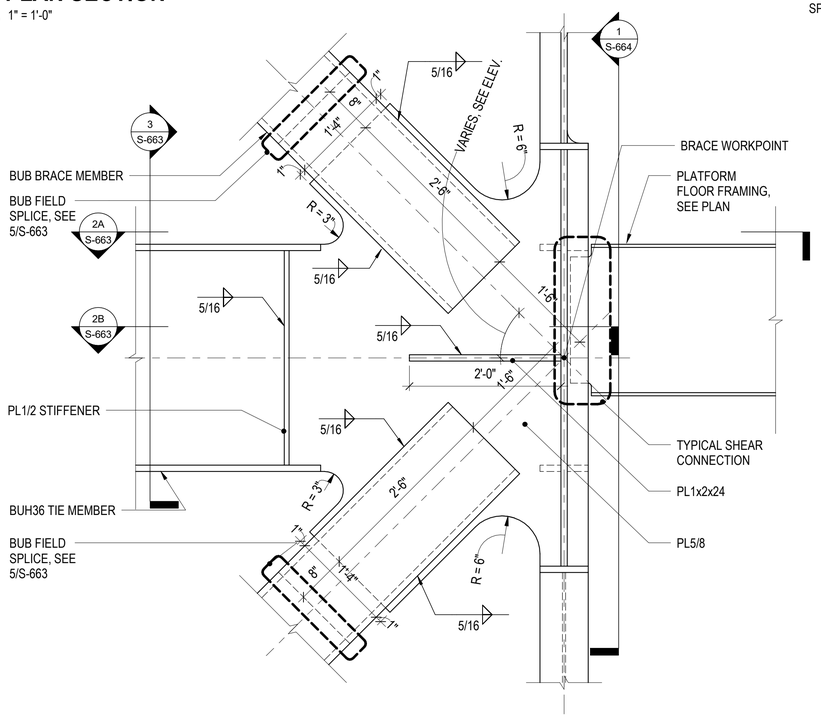

2 BRACE DETAIL AT PLATFORM
1" = 1'-0"

DESIGN BY:										TranSystems TRANSYSTEMS 222 SOUTH RIVERSIDE PLAZA SUITE 610 CHICAGO, ILLINOIS 60606	SOM SKIDMORE, OWINGS & MERRILL LLP 224 SOUTH MICHIGAN AVENUE, SUITE 1000 CHICAGO, ILLINOIS 60604			CDOT CHICAGO DEPARTMENT OF TRANSPORTATION DIVISION OF ENGINEERING	STATE / LAKE LOOP ELEVATED STATION 200 NORTH STATE STREET, CHICAGO, IL 60601	SPEC. NO.
DRAWN BY:																	
CHECKED BY:		4	7/3/2023	ISSUED FOR BID											STEEL DETAILS	DRAWING NO. S-663
APPROVED BY:		1	11/4/2022	ISSUED FOR PERMIT REVISION 1												
CDOT/APPROVED BY:		0	9/9/2022	ISSUED FOR PERMIT	MC	MW	BY								CDOT PROJECT D-1-209	DATE: 9/9/2022	REVISION NO.4
		NO.	DATE	REVISIONS	DES.	DRW.	CHK.	DCCO	CDOT								

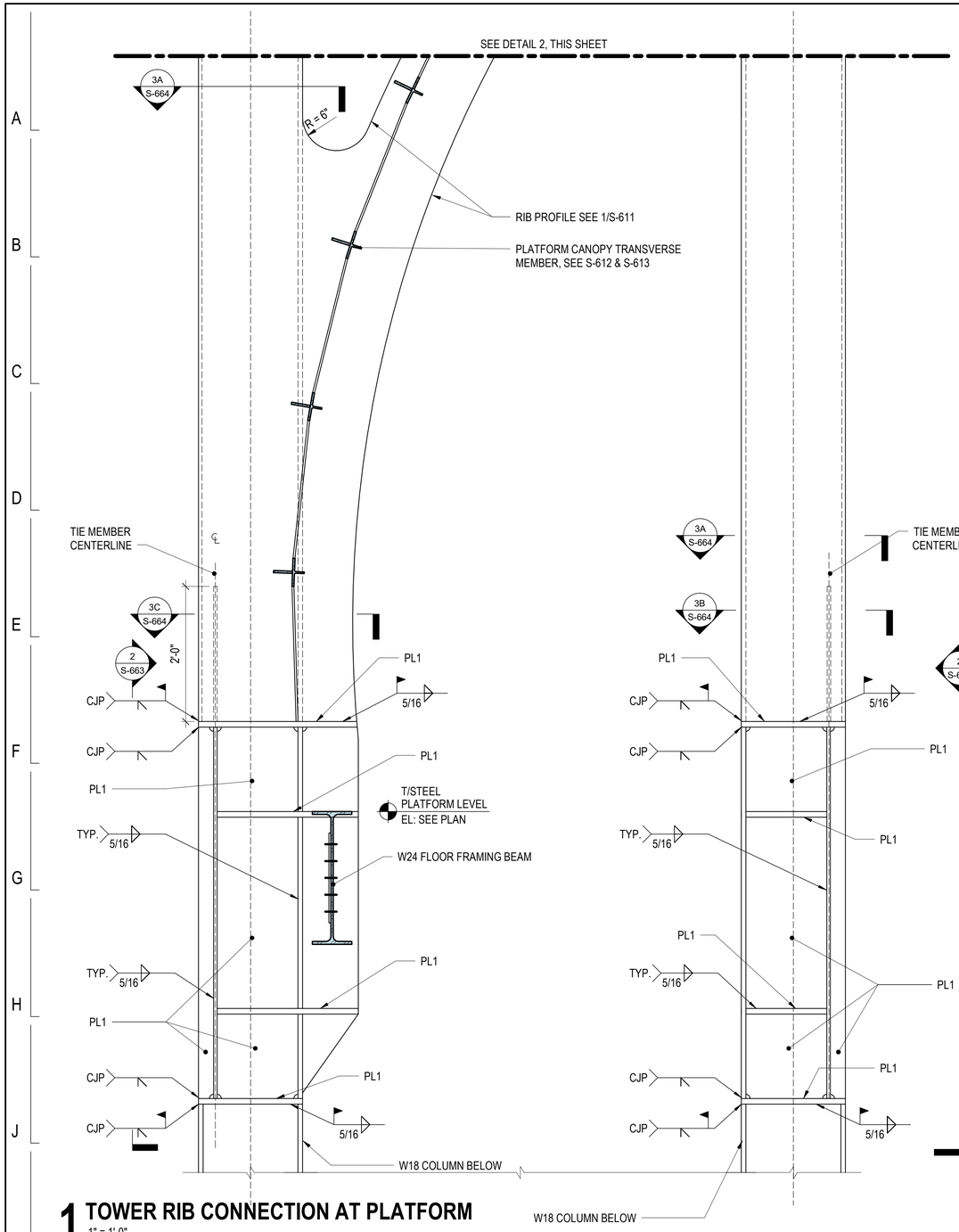

1 TOWER RIB CONNECTION AT PLATFORM
1" = 1'-0"

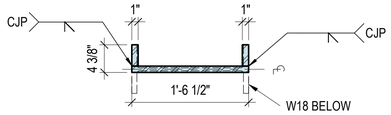

3A TOWER RIB SECTION
1" = 1'-0"

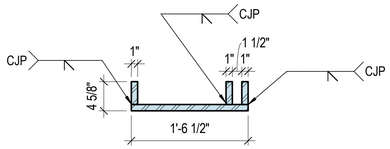

3B TOWER RIB SECTION
1" = 1'-0"

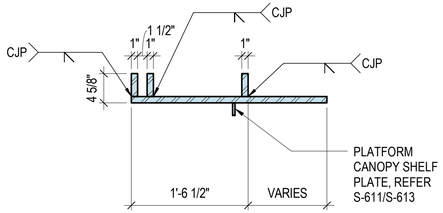

3C TOWER RIB SECTION
1" = 1'-0"

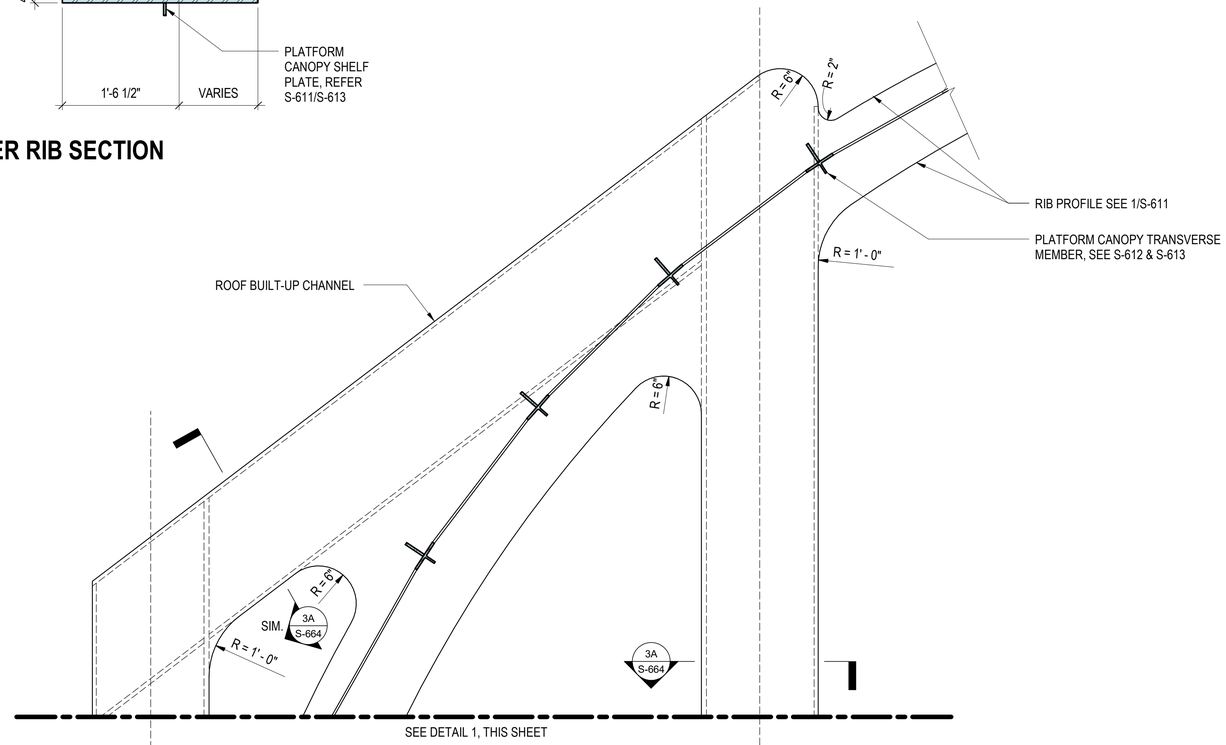

2 TOWER RIB CONNECTION
1" = 1'-0"

DESIGN BY:										TranSystems TRANSYSTEMS 222 SOUTH RIVERSIDE PLAZA SUITE 610 CHICAGO, ILLINOIS 60606	SOM SKIDMORE, OWINGS & MERRILL LLP 224 SOUTH MICHIGAN AVENUE, SUITE 1000 CHICAGO, ILLINOIS 60604			CDOT CHICAGO DEPARTMENT OF TRANSPORTATION DIVISION OF ENGINEERING	STATE / LAKE LOOP ELEVATED STATION 200 NORTH STATE STREET, CHICAGO, IL 60601	SPEC. NO.
DRAWN BY:																	
CHECKED BY:		4	7/3/2023	ISSUED FOR BID											STEEL DETAILS	DRAWING NO. S-664
APPROVED BY:		1	11/4/2022	ISSUED FOR PERMIT REVISION 1												
CDOT/APPROVED BY:		0	9/9/2022	ISSUED FOR PERMIT	MC	MW	BY								CDOT PROJECT D-1-209	DATE: 9/9/2022	REVISION NO.4
		NO.	DATE	REVISIONS	DES.	DRW.	CHK.	DCCO	CDOT								

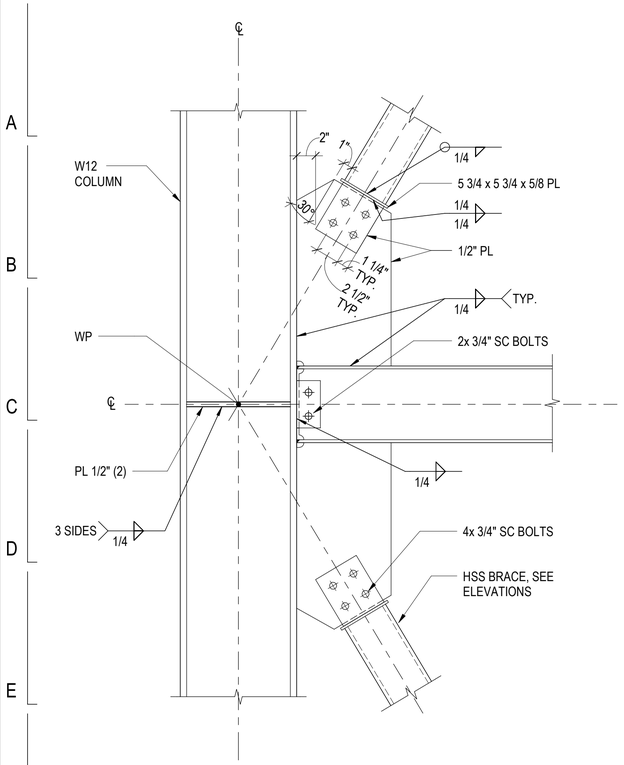

1 BRACE DETAIL
1 1/2" = 1'-0"

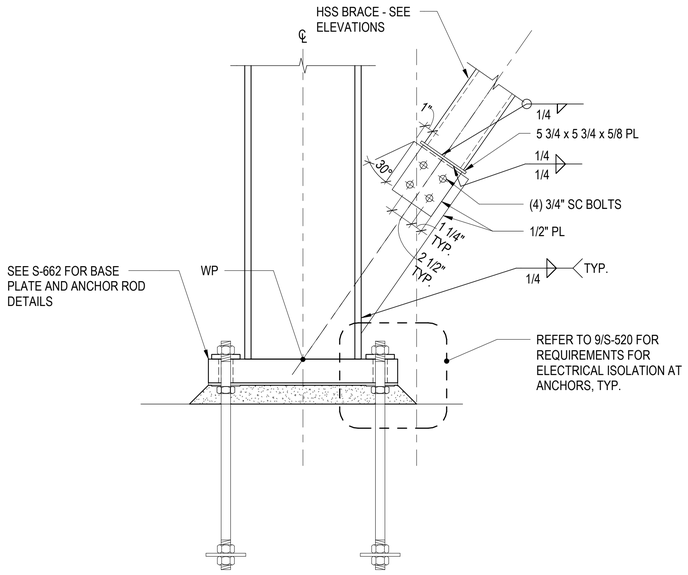

2 BRACE DETAIL AT COLUMN BASE
1 1/2" = 1'-0"

DESIGN BY:										
DRAWN BY:										
CHECKED BY:		4	7/3/2023	ISSUED FOR BID						
APPROVED BY:		1	11/4/2022	ISSUED FOR PERMIT REVISION 1						
CDOT/APPROVED BY:		0	9/9/2022	ISSUED FOR PERMIT	MC	MW	BY			
		NO.	DATE	REVISIONS	DES.	DRW.	CHK.	DCCO	CDOT	

TRANSYSTEMS
222 SOUTH RIVERSIDE PLAZA SUITE 610
CHICAGO, ILLINOIS 60606

SKIDMORE, OWINGS & MERRILL LLP
224 SOUTH MICHIGAN AVENUE, SUITE 1000
CHICAGO, ILLINOIS 60604

CHICAGO DEPARTMENT
OF TRANSPORTATION
DIVISION OF ENGINEERING

STATE / LAKE LOOP ELEVATED STATION
200 NORTH STATE STREET, CHICAGO, IL 60601

SPEC. NO.

BRACE DETAILS

DRAWING NO.
S-665

CDOT PROJECT D-1-209

DATE: 9/9/2022

REVISION NO.4

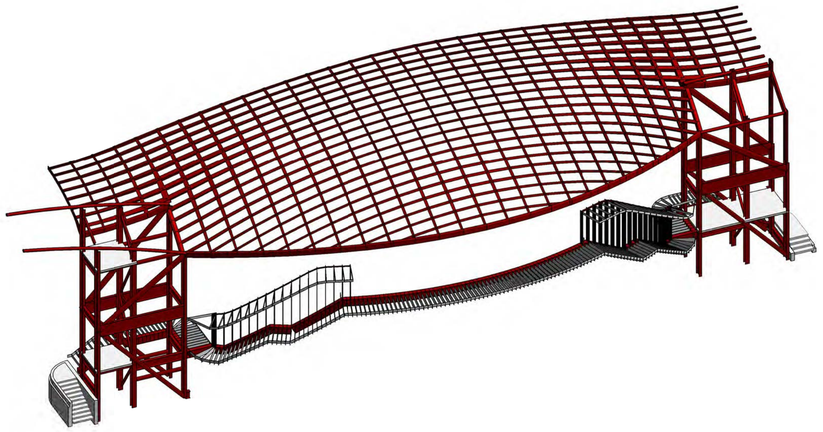

1 3D VIEW CENTRAL STAIR

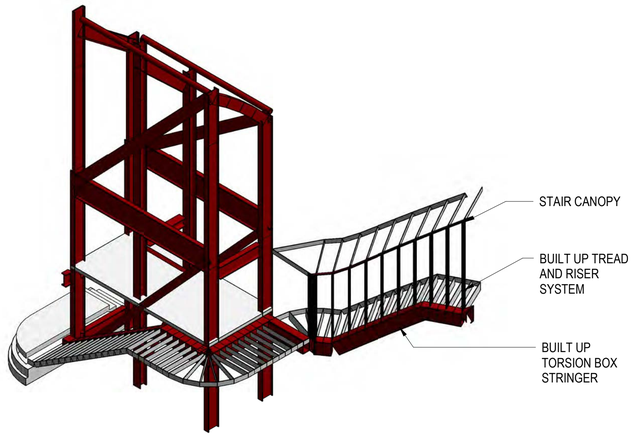

2 3D VIEW OF CENTRAL STAIR CONNECTION TO TOWER

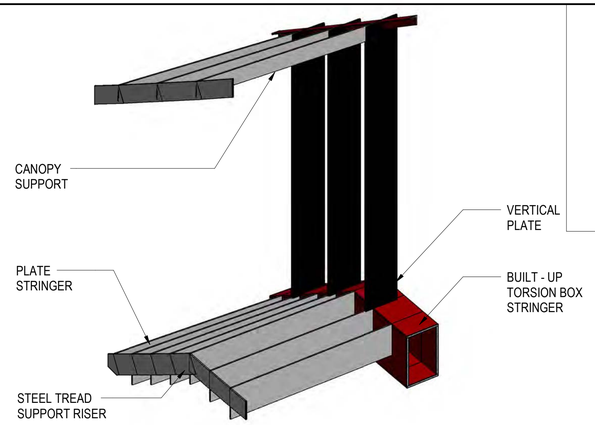

3 STAIR SECTION

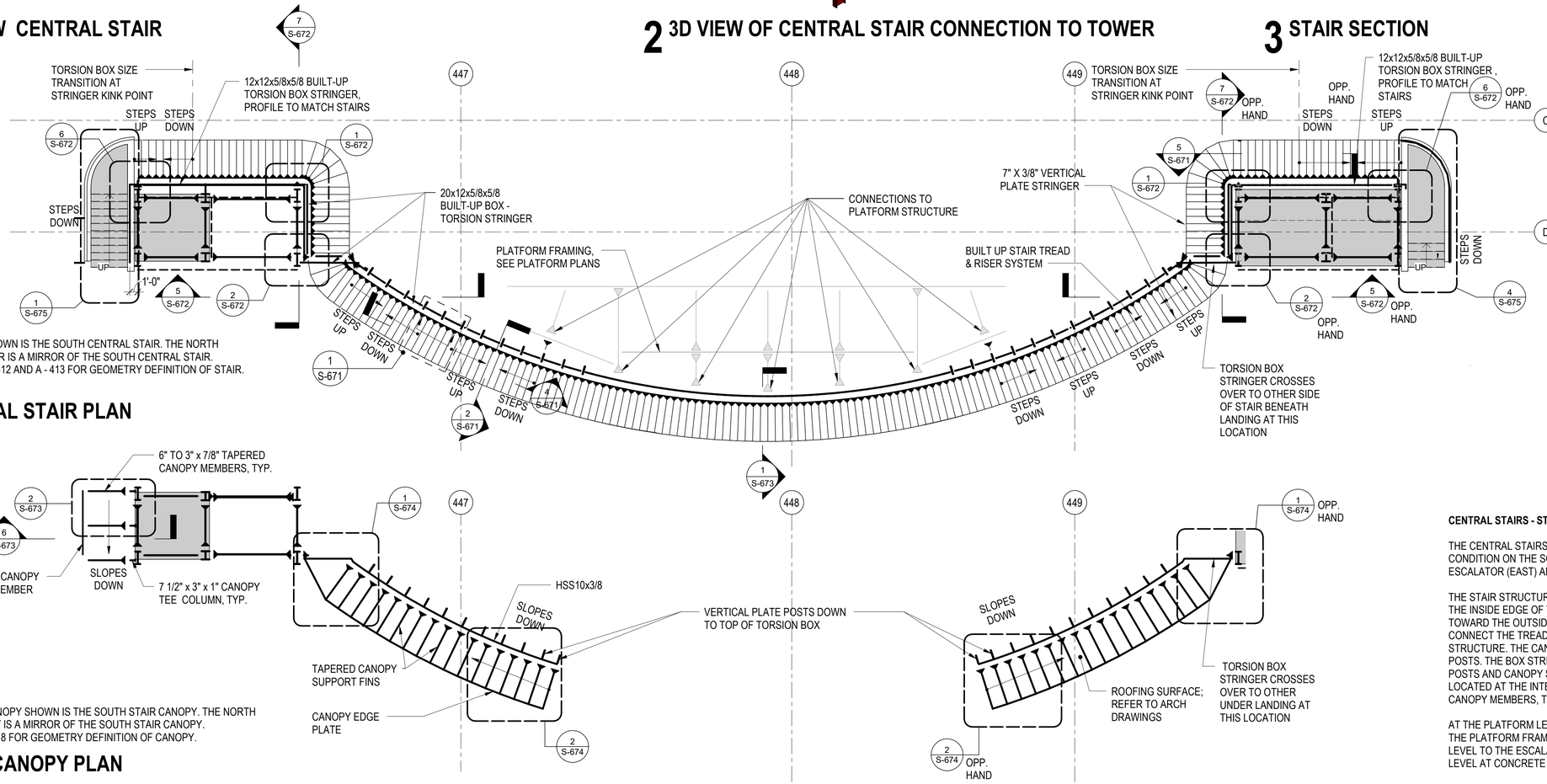

NOTES:
1. THE STAIR SHOWN IS THE SOUTH CENTRAL STAIR. THE NORTH CENTRAL STAIR IS A MIRROR OF THE SOUTH CENTRAL STAIR.
2. REFER TO A - 412 AND A - 413 FOR GEOMETRY DEFINITION OF STAIR.

4 CENTRAL STAIR PLAN
1/8" = 1'-0"

NOTES:
1. THE STAIR CANOPY SHOWN IS THE SOUTH STAIR CANOPY. THE NORTH STAIR CANOPY IS A MIRROR OF THE SOUTH STAIR CANOPY.
2. REFER TO A-418 FOR GEOMETRY DEFINITION OF CANOPY.

5 STAIR CANOPY PLAN
1/8" = 1'-0"

CENTRAL STAIRS - STRUCTURAL SYSTEM DESCRIPTION

THE CENTRAL STAIRS - ONE LOCATED ON THE NORTH SIDE OF THE STATION AND A MIRRORED CONDITION ON THE SOUTH SIDE OF THE STATION, SPAN FROM STREET LEVEL AT THE ESCALATOR (EAST) AND ELEVATOR (WEST) TOWERS UP TO THE MAIN PLATFORM LEVEL.

THE STAIR STRUCTURE CONSISTS OF A PRIMARY SPANNING BUILT-UP BOX STRINGER, INSET TO THE INSIDE EDGE OF THE STAIR AND SUPPORTING TREAD/RISER PLATES CANTILEVERED TOWARD THE OUTSIDE. AT THE OUTSIDE EDGE OF THE STAIR, A PLATE STRINGER ACTS TO CONNECT THE TREAD/RISER PLATES TOGETHER AND HORIZONTALLY STIFFEN THE STAIR STRUCTURE. THE CANTILEVERED RISER PLATES TURN UP TO BECOME HANDRAIL SUPPORT POSTS. THE BOX STRINGER ALSO SUPPORTS A SERIES OF VERTICAL STEEL PLATE 'PICKET' POSTS AND CANOPY STRUCTURE FOR A PORTION OF THE SPAN. A STEEL TUBE MEMBER LOCATED AT THE INTERSECTION OF THE VERICAL PICKET POSTS AND THE CANTILEVERED CANOPY MEMBERS, TIES THE SERIES OF PLATE POSTS TOGETHER.

AT THE PLATFORM LEVEL, THE STAIR STRUCTURE IS SUPPORTED FROM, AND INTEGRATED INTO, THE PLATFORM FRAMING. THE MAIN SPAN OF THE BOX STRINGER IS FROM THE PLATFORM LEVEL TO THE ESCALATOR AND ELEVATOR TOWERS. THE STAIR TERMINATES NEAR GROUND LEVEL AT CONCRETE PLINTHS.

DESIGN BY:									
DRAWN BY:		4	7/3/2023	ISSUED FOR BID					
CHECKED BY:		3	2/03/2023	ISSUED FOR PERMIT REVISION 3					
APPROVED BY:		1	11/4/2022	ISSUED FOR PERMIT REVISION 1					
CDOT/APPROVED BY:		0	9/9/2022	ISSUED FOR PERMIT	MC	MW	BY		
		NO.	DATE	REVISIONS	DES.	DRW.	CHK.	DCCO	CDOT

TRANSYSTEMS
222 SOUTH RIVERSIDE PLAZA SUITE 610
CHICAGO, ILLINOIS 60606

SKIDMORE, OWINGS & MERRILL LLP
224 SOUTH MICHIGAN AVENUE, SUITE 1000
CHICAGO, ILLINOIS 60604

CHICAGO DEPARTMENT OF TRANSPORTATION
DIVISION OF ENGINEERING

STATE / LAKE LOOP ELEVATED STATION
200 NORTH STATE STREET, CHICAGO, IL 60601

SPEC. NO.

CENTRAL STAIR PARTIAL PLANS

DRAWING NO. S-670

CDOT PROJECT D-1-209 | DATE: 9/9/2022 | REVISION NO.4

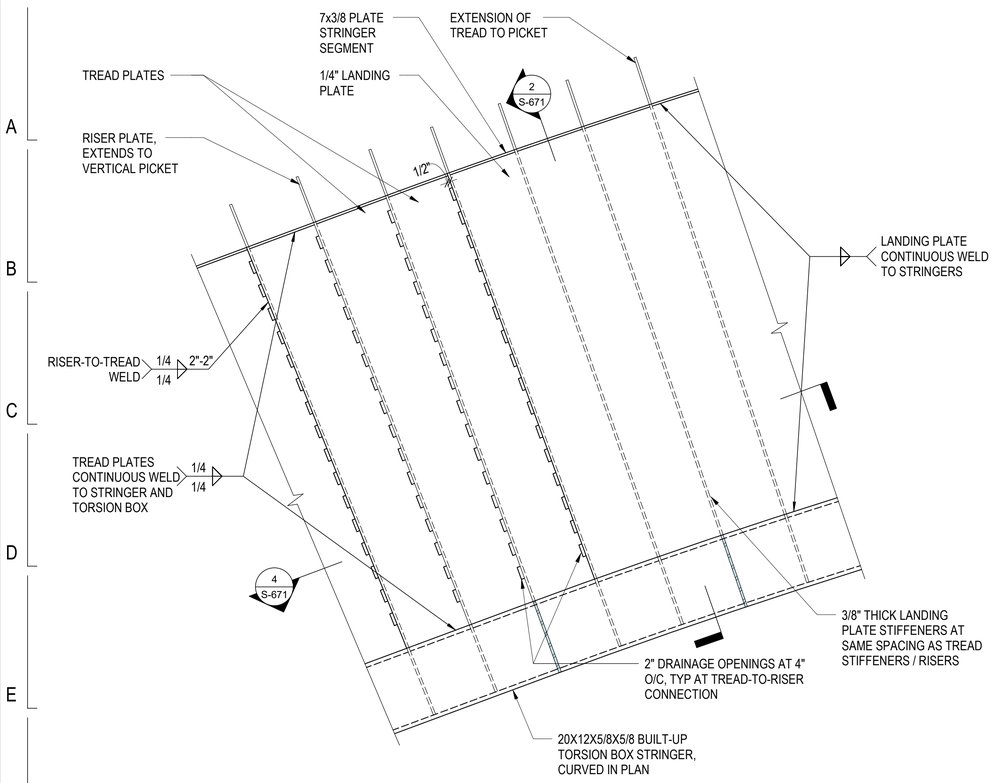

1 CENTRAL STAIR - PLAN DETAIL
1" = 1'-0"

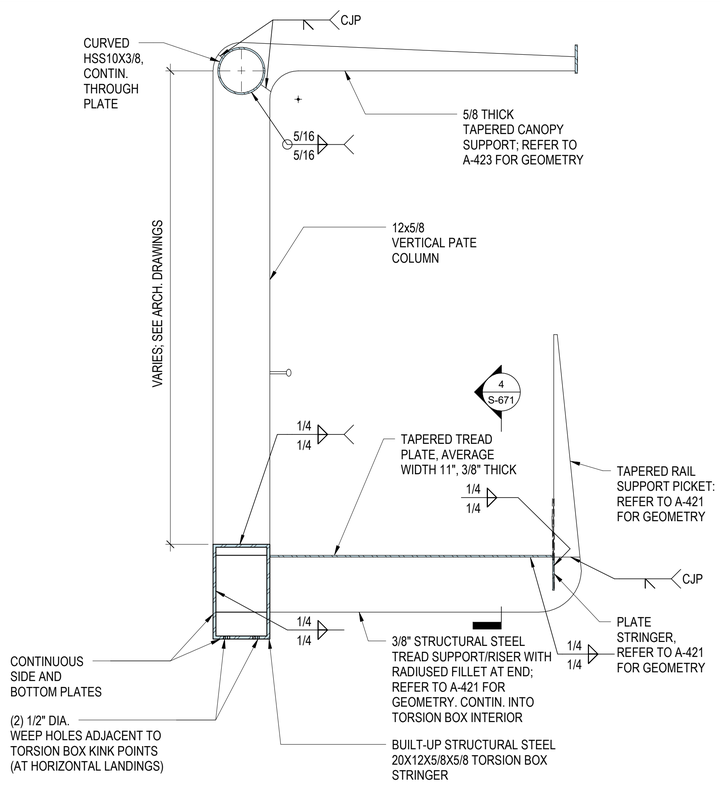

2 SECTION THROUGH TORSION BOX
3/4" = 1'-0"

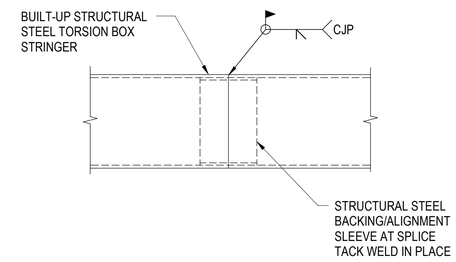

3 TORSION BOX SPLICE DETAIL
3/4" = 1'-0"

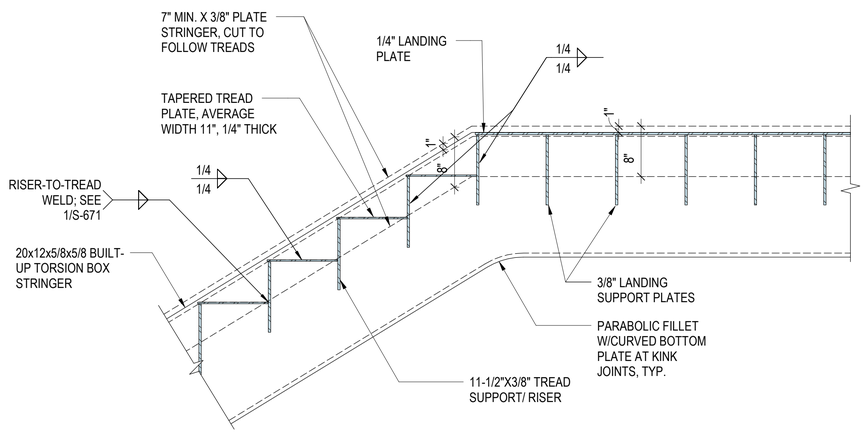

NOTE: REFER TO 9/A-541, SIM. FOR STAIR TREAD GEOMETRY

4 SECTION THROUGH STAIR TREADS
1" = 1'-0"

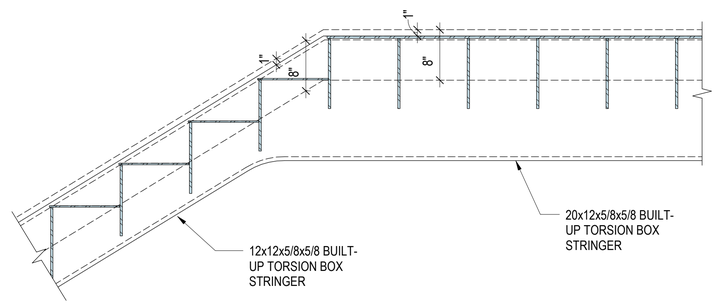

NOTES:
1. REFER TO DETAIL 4 FOR ANNOTATION AND NOTES
2. REFER TO 9/A-541, SIM. FOR STAIR TREAD GEOMETRY

5 SECTION THROUGH STAIR TREADS AT SIZE TRANSITION
1" = 1'-0"

NO.	DATE	REVISIONS	DES.	DRW.	CHK.	DCCO	CDOT
4	7/3/2023	ISSUED FOR BID					
2	1/13/2023	ISSUED FOR PERMIT REVISION 2					
1	11/4/2022	ISSUED FOR PERMIT REVISION 1					
0	9/9/2022	ISSUED FOR PERMIT	MC	MW	BY		

DESIGN BY:
DRAWN BY:
CHECKED BY:
APPROVED BY:
CDOT/APPROVED BY:

TRANSYSTEMS
222 SOUTH RIVERSIDE PLAZA SUITE 610
CHICAGO, ILLINOIS 60606

SKIDMORE, OWINGS & MERRILL LLP
224 SOUTH MICHIGAN AVENUE, SUITE 1000
CHICAGO, ILLINOIS 60604

CHICAGO DEPARTMENT OF TRANSPORTATION
DIVISION OF ENGINEERING

STATE / LAKE LOOP ELEVATED STATION
200 NORTH STATE STREET, CHICAGO, IL 60601

CENTRAL STAIR DETAILS

CDOT PROJECT D-1-209

DATE: 9/9/2022

SPEC. NO.

DRAWING NO. S-671

REVISION NO.4

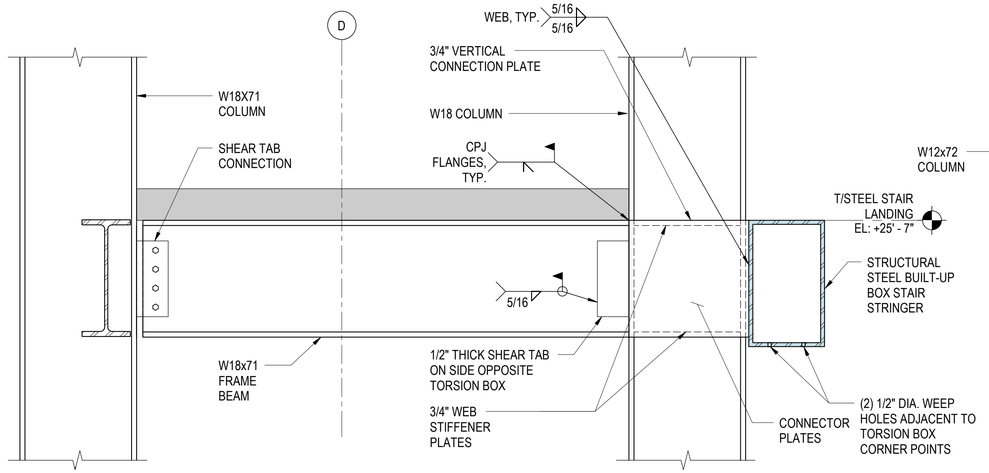

7 STAIR TORSION BOX CONNECTION TO ELEVATOR TOWERS, EAST - WEST DIRECTION

1" = 1'-0"

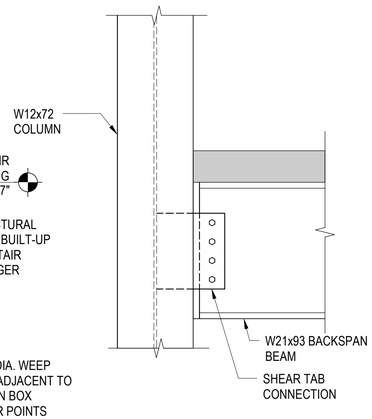

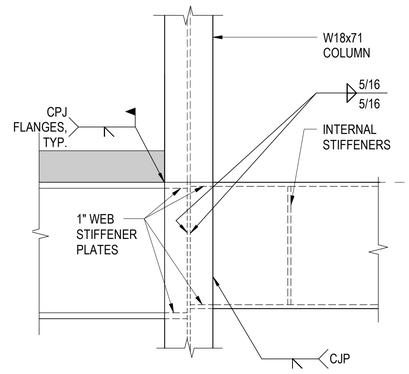

5 STAIR TORSION BOX CONNECTION TO ELEVATOR TOWER, NORTH - SOUTH DIRECTION

1" = 1'-0"

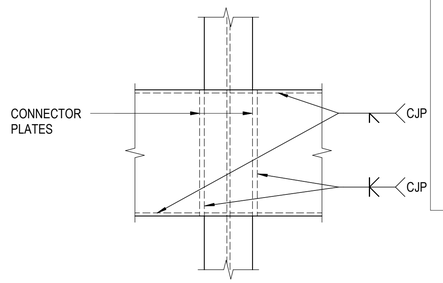

3 ELEVATION VIEW OF INTERIOR - SIDE CONNECTION TO STAIR TORSION BOX

1" = 1'-0"

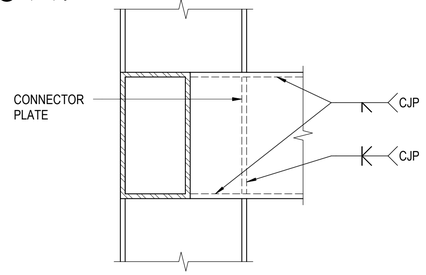

4 ELEVATION VIEW OF EXTERIOR - SIDE CONNECTION TO STAIR TORSION BOX

1" = 1'-0"

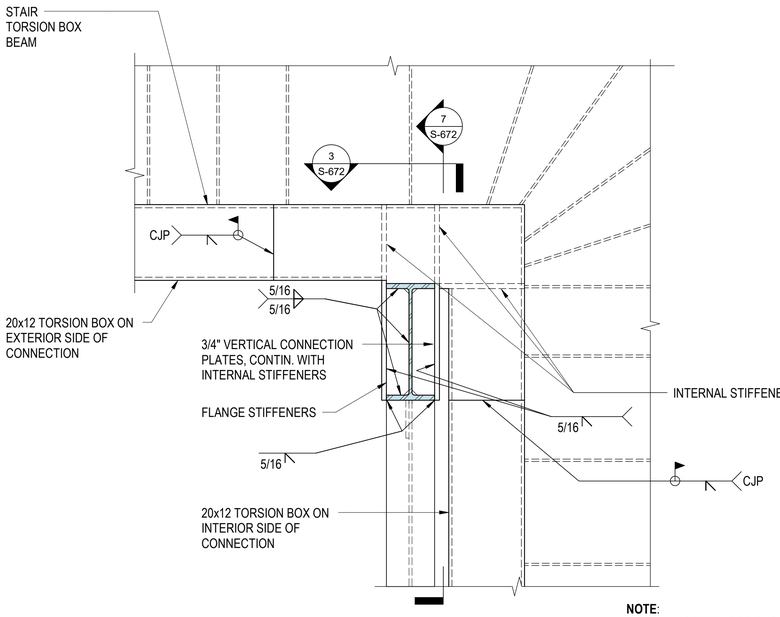

1 PLAN VIEW OF INTERIOR - SIDE CONNECTION TO STAIR TORSION BOX

1" = 1'-0"

NOTE:
INTERNAL STIFFENERS SHOWN HAVE THE SAME THICKNESS AS THE ADJACENT PARALLEL CONNECTION PLATES, COLUMN SEGMENTS, OR BOX SIDES

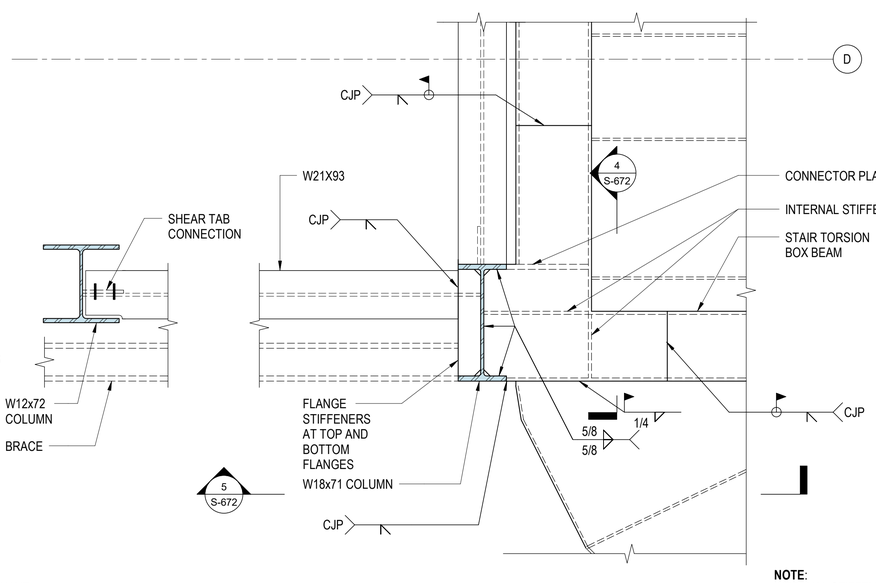

2 PLAN VIEW OF EXTERIOR - SIDE CONNECTION TO STAIR TORSION BOX

1" = 1'-0"

NOTE:
INTERNAL STIFFENERS SHOWN HAVE THE SAME THICKNESS AS THE ADJACENT PARALLEL CONNECTION PLATES, COLUMN SEGMENTS, OR BOX SIDES

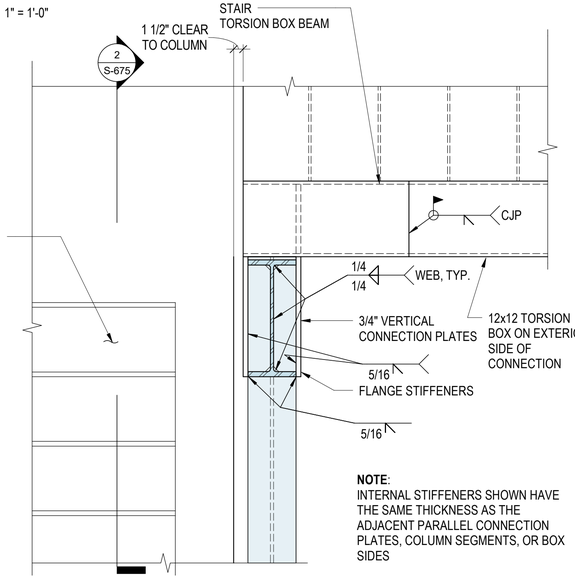

6 PLAN VIEW OF INTERIOR - SIDE CONNECTION TO STAIR TORSION BOX

1" = 1'-0"

NOTE:
CONNECT TORSION BOX BEAM TO COLUMN CONNECTOR PLATES BEFORE CONCRETE PLINTH IS POURED

DESIGN BY:									
DRAWN BY:		4	7/3/2023	ISSUED FOR BID					
CHECKED BY:		2	1/13/2023	ISSUED FOR PERMIT REVISION 2					
APPROVED BY:		1	11/4/2022	ISSUED FOR PERMIT REVISION 1					
CDOT/APPROVED BY:		0	9/9/2022	ISSUED FOR PERMIT	MC	MW	BY		
		NO.	DATE	REVISIONS	DES.	DRW.	CHK.	DCCO	CDOT

TRANSYSTEMS
222 SOUTH RIVERSIDE PLAZA SUITE 610
CHICAGO, ILLINOIS 60606

SKIDMORE, OWINGS & MERRILL LLP
224 SOUTH MICHIGAN AVENUE, SUITE 1000
CHICAGO, ILLINOIS 60604

CHICAGO DEPARTMENT OF TRANSPORTATION
DIVISION OF ENGINEERING

STATE / LAKE LOOP ELEVATED STATION
200 NORTH STATE STREET, CHICAGO, IL 60601

SPEC. NO.

CENTRAL STAIR DETAILS

DRAWING NO.
S-672

CDOT PROJECT D-1-209

DATE: 9/9/2022

REVISION NO.4

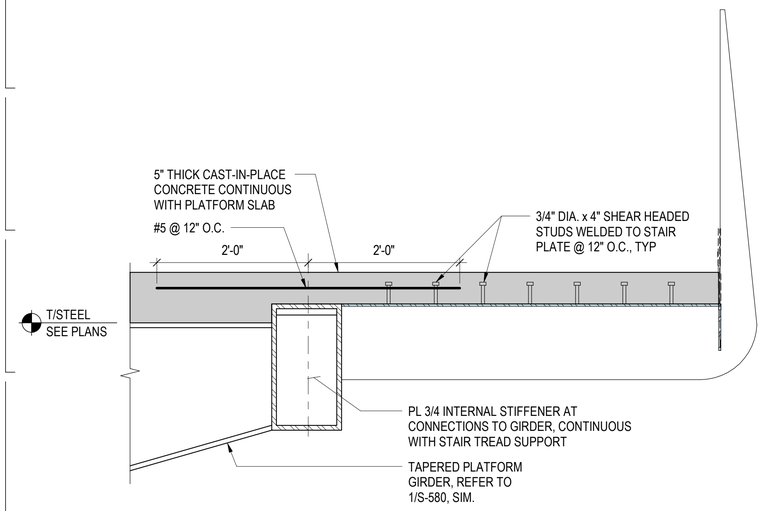

1 SECTION OF STAIR CONNECTION TO PLATFORM
1" = 1'-0"

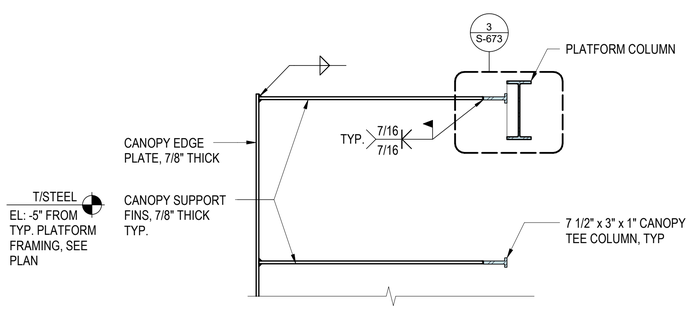

2 PLAN VIEW - CANOPY TEE COLUMN TO FIN CONNECTION
1/2" = 1'-0"

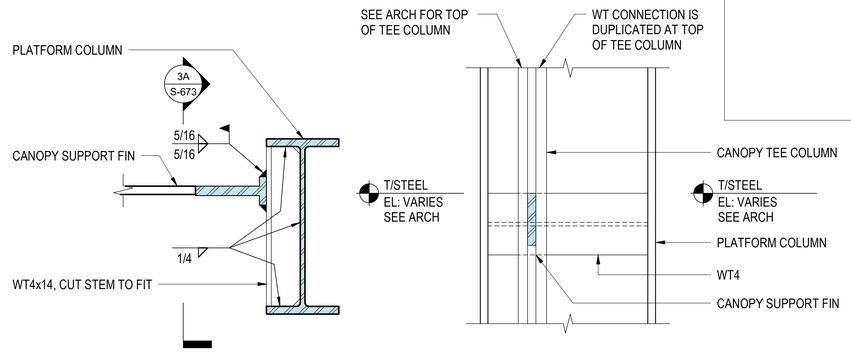

3A SECTION
1 1/2" = 1'-0"

3 CANOPY TEE COLUMN TO PLATFORM COLUMN CONNECTION AT HORIZONTAL CANOPY SUPPORT
1 1/2" = 1'-0"

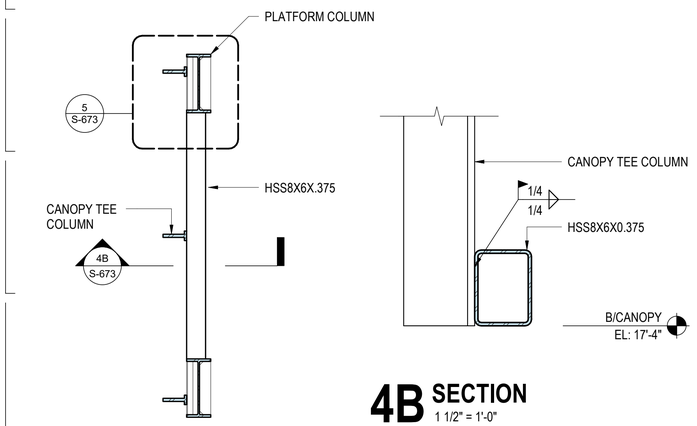

4B SECTION
1 1/2" = 1'-0"

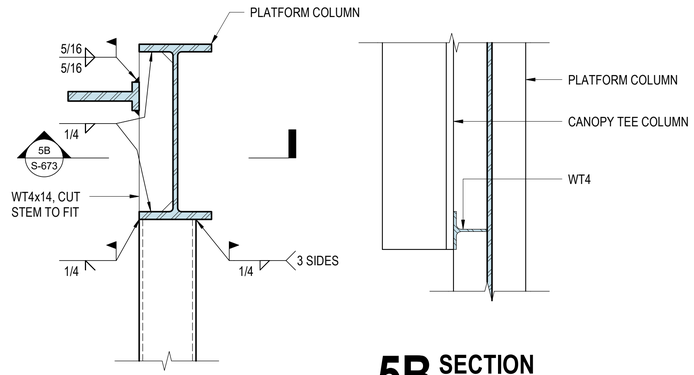

5B SECTION
1 1/2" = 1'-0"

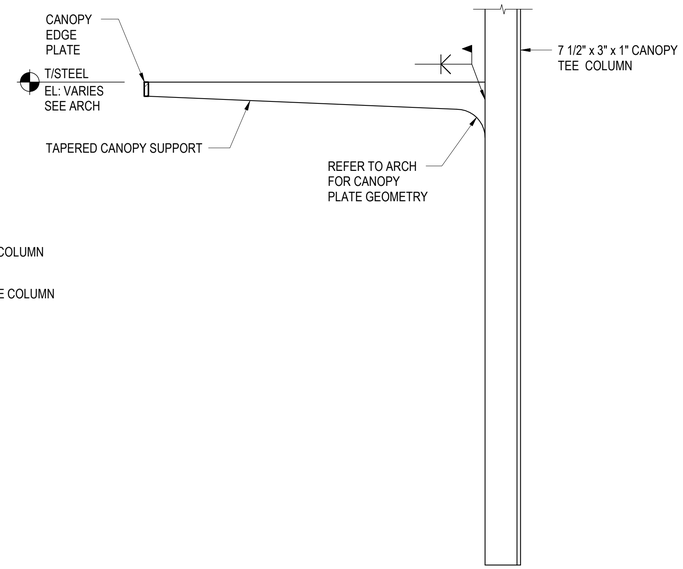

4 PLAN VIEW - BASE OF CANOPY TEE COLUMN
1/2" = 1'-0"

5 BASE OF CANOPY TEE COLUMN CONNECTION TO PLATFORM COLUMN
1 1/2" = 1'-0"

6 ELEVATION VIEW - CANOPY SUPPORT FIN
3/4" = 1'-0"

DESIGN BY:										
DRAWN BY:										
CHECKED BY:		4	7/3/2023	ISSUED FOR BID						
APPROVED BY:		1	11/4/2022	ISSUED FOR PERMIT REVISION 1						
CDOT/APPROVED BY:		0	9/9/2022	ISSUED FOR PERMIT	MC	MW	BY			
		NO.	DATE	REVISIONS	DES.	DRW.	CHK.	DCCO	CDOT	

TRANSYSTEMS
222 SOUTH RIVERSIDE PLAZA SUITE 610
CHICAGO, ILLINOIS 60606

SKIDMORE, OWINGS & MERRILL LLP
224 SOUTH MICHIGAN AVENUE, SUITE 1000
CHICAGO, ILLINOIS 60604

CHICAGO DEPARTMENT OF TRANSPORTATION
DIVISION OF ENGINEERING

STATE / LAKE LOOP ELEVATED STATION
200 NORTH STATE STREET, CHICAGO, IL 60601

SPEC. NO.

CENTRAL STAIR DETAILS

DRAWING NO. S-673

CDOT PROJECT D-1-209 | DATE: 9/9/2022 | REVISION NO.4

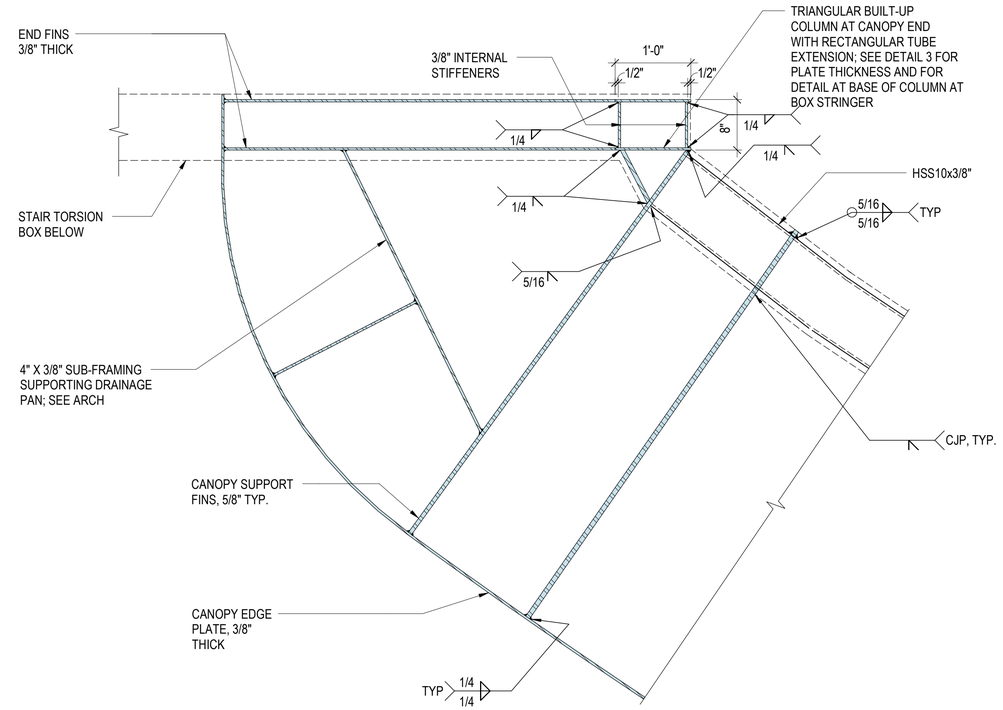

1 CANOPY END NEAR ABUTMENT TOWER
1" = 1'-0"

NOTE:
REFER TO A-418 FOR CANOPY GEOMETRY

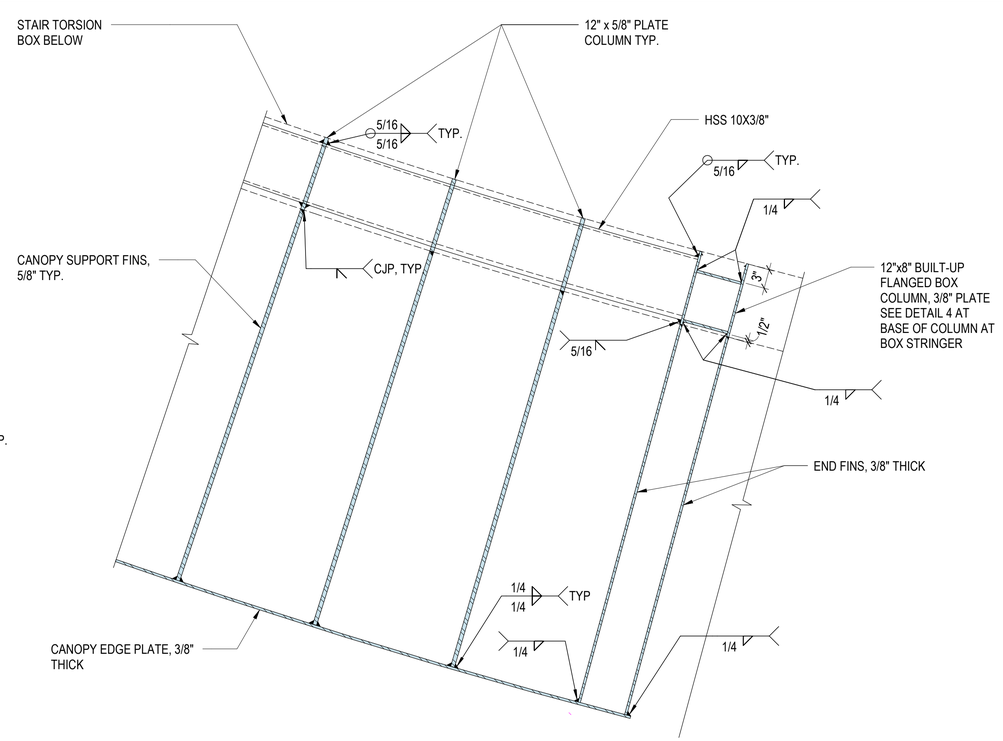

2 CANOPY END AT PLATFORM LEVEL
1" = 1'-0"

NOTE:
REFER TO A-418 FOR CANOPY GEOMETRY

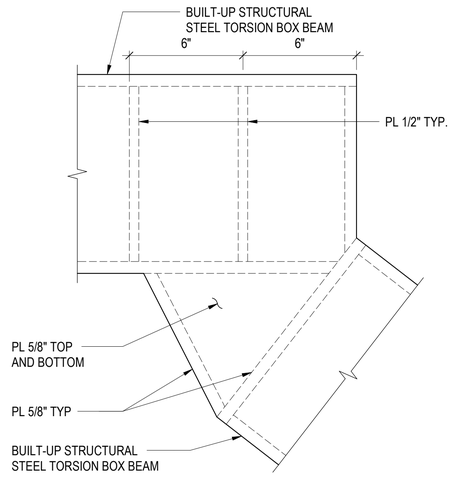

3A AT TORSION BOX

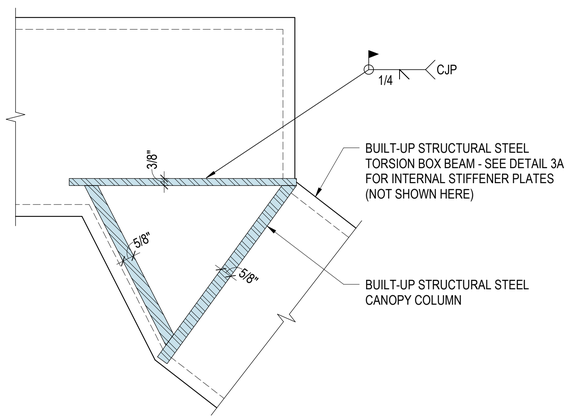

3B AT CANOPY COLUMN

3 CANOPY COLUMN BASE DETAIL
3" = 1'-0"

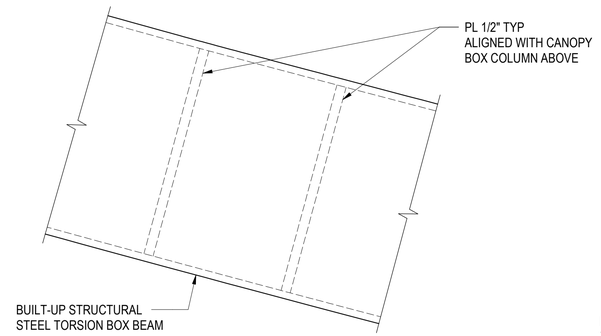

4A AT TORSION BOX

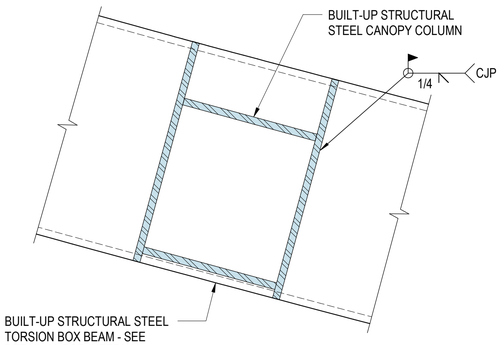

4B AT CANOPY COLUMN

4 CANOPY COLUMN BASE DETAIL
3" = 1'-0"

NO.	DATE	REVISIONS	DES.	DRW.	CHK.	DCCO	CDOT
4	7/3/2023	ISSUED FOR BID					
3	2/03/2023	ISSUED FOR PERMIT REVISION 3					
2	1/13/2023	ISSUED FOR PERMIT REVISION 2					
1	11/4/2022	ISSUED FOR PERMIT REVISION 1					
0	9/9/2022	ISSUED FOR PERMIT	MC	MW	BY		

DESIGN BY:
DRAWN BY:
CHECKED BY:
APPROVED BY:
CDOT/APPROVED BY:

TRANSYSTEMS
222 SOUTH RIVERSIDE PLAZA SUITE 610
CHICAGO, ILLINOIS 60606

SKIDMORE, OWINGS & MERRILL LLP
224 SOUTH MICHIGAN AVENUE, SUITE 1000
CHICAGO, ILLINOIS 60604

CHICAGO DEPARTMENT
OF TRANSPORTATION
DIVISION OF ENGINEERING

STATE / LAKE LOOP ELEVATED STATION
200 NORTH STATE STREET, CHICAGO, IL 60601

SPEC. NO.

CENTRAL STAIR DETAILS

DRAWING NO.
S-674

CDOT PROJECT D-1-209

DATE: 9/9/2022

REVISION NO.4

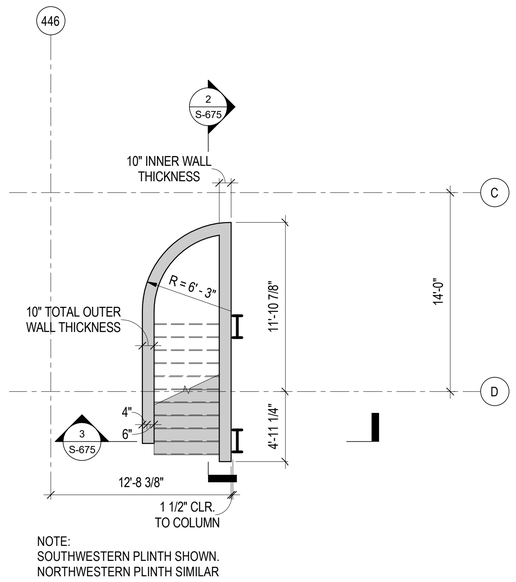

NOTE:
SOUTHWESTERN PLINTH SHOWN.
NORTHWESTERN PLINTH SIMILAR

1 WEST PLINTH PLAN
3/16" = 1'-0"

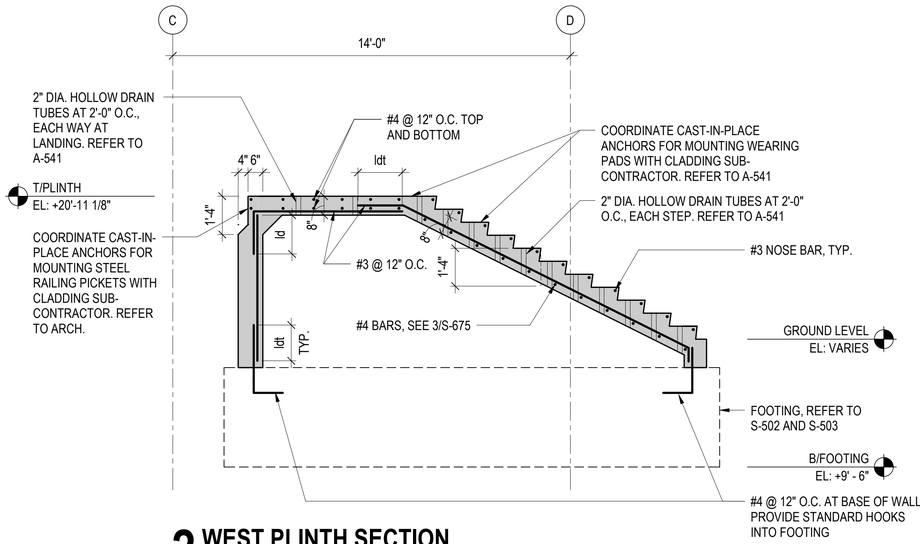

2 WEST PLINTH SECTION
3/8" = 1'-0"

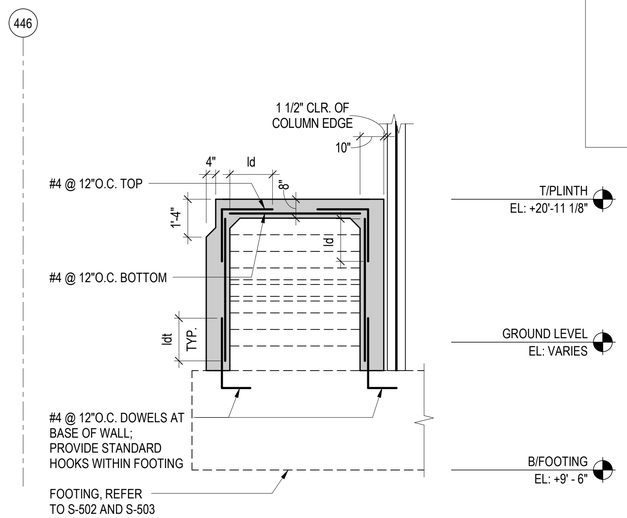

3 WEST PLINTH SECTION
3/8" = 1'-0"

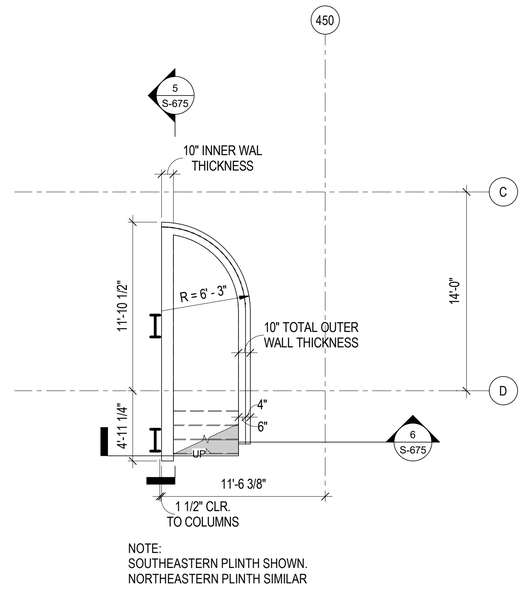

NOTE:
SOUTHEASTERN PLINTH SHOWN.
NORTHEASTERN PLINTH SIMILAR

4 EAST PLINTH PLAN
3/16" = 1'-0"

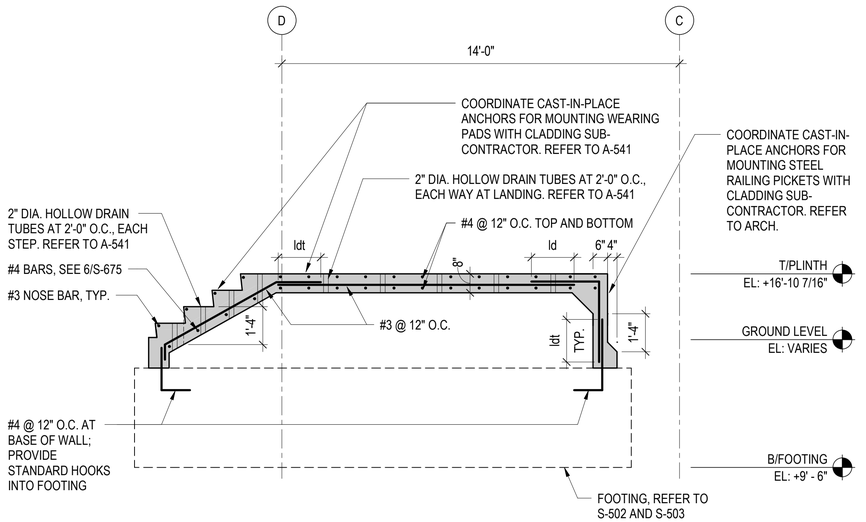

5 EAST PLINTH SECTION
3/8" = 1'-0"

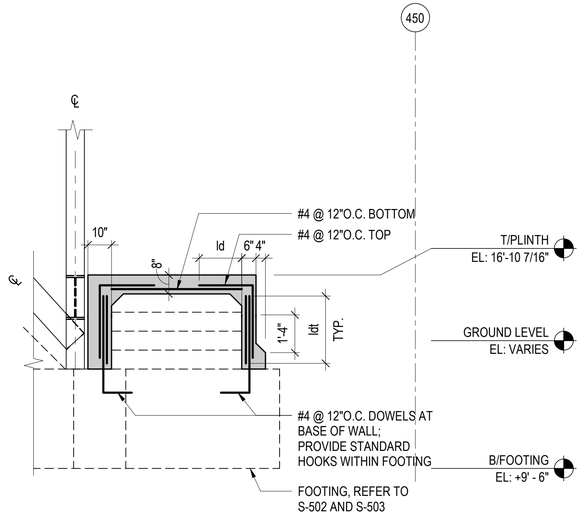

6 EAST PLINTH SECTION
3/8" = 1'-0"

DESIGN BY:									
DRAWN BY:									
CHECKED BY:		4	7/3/2023	ISSUED FOR BID					
APPROVED BY:		1	11/4/2022	ISSUED FOR PERMIT REVISION 1					
CDOT/APPROVED BY:		0	9/9/2022	ISSUED FOR PERMIT	MC	MW	BY		
		NO.	DATE	REVISIONS	DES.	DRW.	CHK.	DCCO	CDOT

TranSystems
TRANSYSTEMS
222 SOUTH RIVERSIDE PLAZA SUITE 610
CHICAGO, ILLINOIS 60606

SOM
SKIDMORE, OWINGS & MERRILL LLP
224 SOUTH MICHIGAN AVENUE, SUITE 1000
CHICAGO, ILLINOIS 60604

CDOT
CHICAGO DEPARTMENT
OF TRANSPORTATION
DIVISION OF ENGINEERING

STATE / LAKE LOOP ELEVATED STATION
200 NORTH STATE STREET, CHICAGO, IL 60601

PLINTH PARTIAL PLANS AND SECTIONS

CDOT PROJECT D-1-209 | DATE: 9/9/2022

SPEC. NO.

DRAWING NO.
S-675

REVISION NO.4

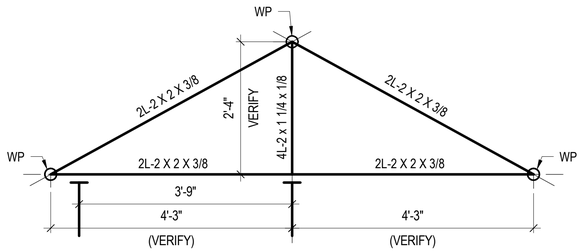

NOTES: 1. RAFTER TRUSS MEMBERS SHOWN IN THIS DETAIL ARE FROM THE ORIGINAL STATE & LAKE STATION AND ARE INTENDED TO BE SALVAGED AND RE-USED. REFER TO HISTORIC CANOPY NOTES, THIS SHEET.

2. DIMENSIONS AND LINES SHOWN ARE STRUCTURAL WORKPOINT DIMENSIONS, NOT MEMBER LENGTHS. REFER TO ARCHITECTURAL DRAWINGS FOR MEMBER LENGTHS

4 RAFTER TRUSS DETAIL
3/4" = 1'-0"

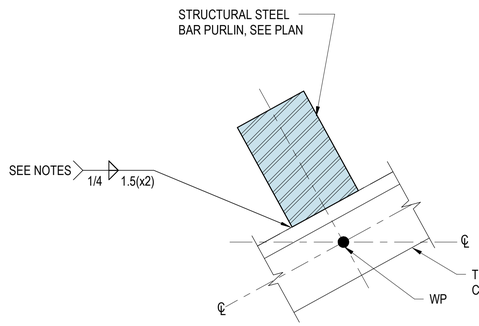

5 DETAIL
6" = 1'-0"

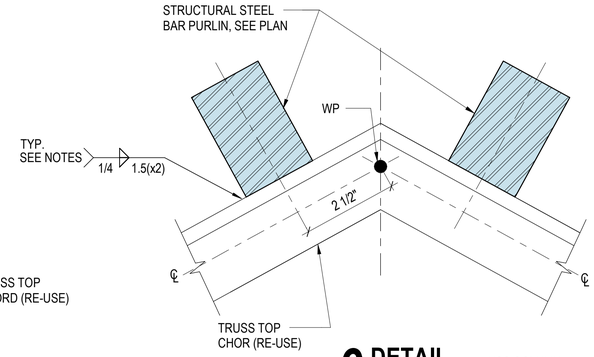

6 DETAIL
6" = 1'-0"

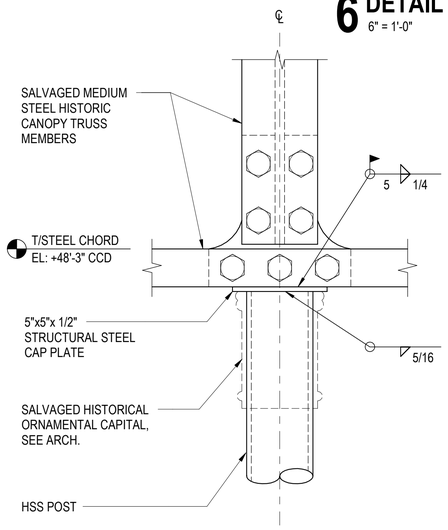

7 DETAIL
3" = 1'-0"

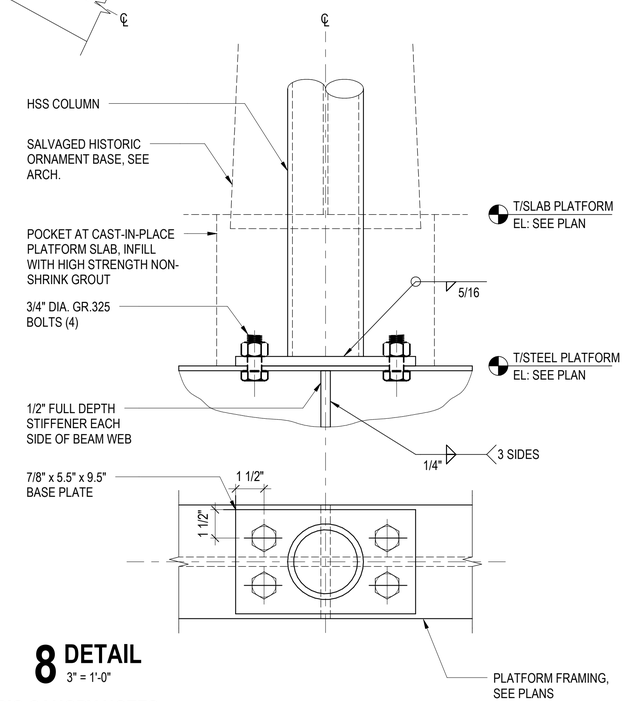

8 DETAIL
3" = 1'-0"

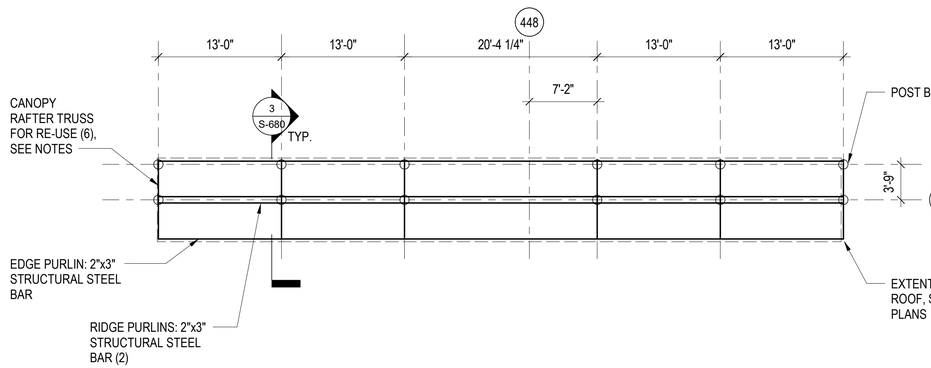

2 CANOPY TRUSS PLAN
1/8" = 1'-0"

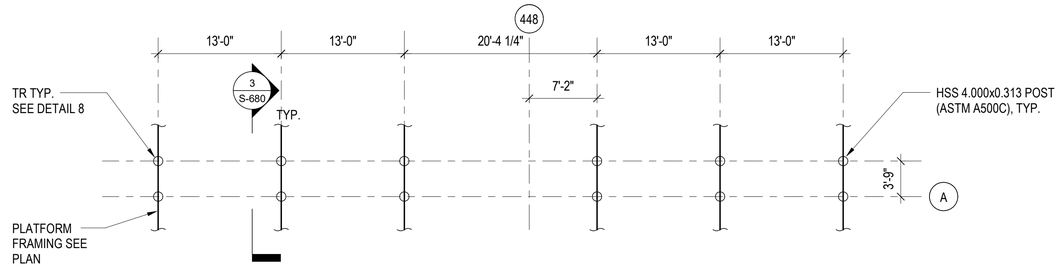

1 PLATFORM LEVEL CANOPY
1/8" = 1'-0"

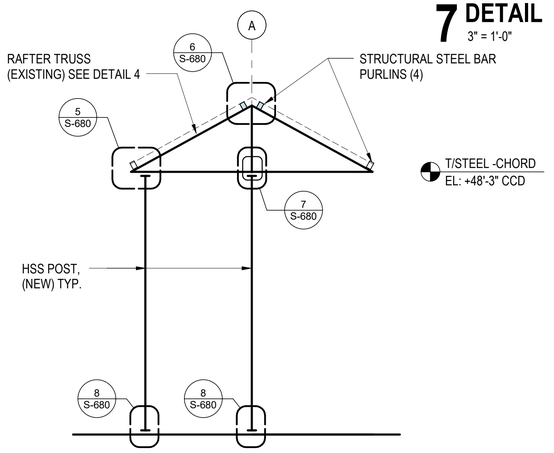

3 TYP. CANOPY SECTION
3/8" = 1'-0"

HISTORIC CANOPY NOTES

1. RAFTER TRUSSES ARE INTENDED TO BE SALVAGED FROM EXISTING CANOPY STRUCTURE AND RE-USED. ALL OTHER STRUCTURAL ELEMENTS SHOWN ON THE HISTORIC CANOPY DRAWING ARE INTENDED TO BE NEW STRUCTURAL STEEL PER THE MATERIAL GRADES INDICATED ON S-600
2. RAFTER TRUSSES FOR RE-USE ARE CONSIDERED TO BE 'MEDIUM STEEL' WITH A YIELD STRENGTH OF NOT LESS THAN 30ksi. CONTRACTOR TO PERFORM COUPON TESTING PER AISC TO VERIFY MATERIAL STRENGTH AND NOTIFY THE ARCHITECT AND ENGINEER IF THE RESULTS DEVIATE FROM THE ASSUMED STRENGTH.
3. ALL HISTORIC CANOPY STEEL IS CLASSIFIED AS AESS TYPE 3. TYPE. REFER TO THE SPECIFICATIONS 051250 FOR AESS REQUIREMENTS.
4. ALL EXISTING HOLES IN RAFTER TRUSS MEMBERS SHALL BE COMPLETELY CLOSED WITH WELD MATERIAL.
5. ALL SALVAGED STEEL FOR RE-USE SHALL BE BLAST CLEANED TO REMOVE ALL EXISTING PAINT AND SHALL ACHIEVE A NEAR-WHITE SURFACE FINISH PRIOR TO APPLICATION OF COATING SYSTEMS AS INDICATED
6. THE STEEL CONTRACTOR FOR THE HISTORIC CANOPY WORK SHALL BE EXPERIENCED ON RENOVATION PROJECTS, WITH MULTIPLE PROJECTS OF SIMILAR SCOPE AND SCALE
7. THE CONTRACTOR SHALL TEST THE EXISTING METAL TO DETERMINE THE CHEMICAL COMPOSITION OF THE STEEL, AND SHALL DEVELOP APPROPRIATE WELDING PROCEDURES WITH APPROPRIATE ELECTRODES, BASED ON THE CHEMICAL CONTENT OF THE EXISTING STEEL.
8. THE CONTRACTOR SHALL NOTIFY THE ARCHITECT IF CONDITIONS / DIMENSIONS OF THE SALVAGED TRUSSES ARE DIFFERENT FROM WHAT IS EXPECTED BASED ON THE DRAWINGS.
9. REFER TO ARCHITECTURAL DRAWINGS INCLUDING A-442 THROUGH A-444, AND A-561 FOR HISTORIC CANOPY

DESIGN BY:									
DRAWN BY:									
CHECKED BY:		4	7/3/2023	ISSUED FOR BID					
APPROVED BY:		1	11/4/2022	ISSUED FOR PERMIT REVISION 1					
CDOT/APPROVED BY:		0	9/9/2022	ISSUED FOR PERMIT	MC	MW	BY		
		NO.	DATE	REVISIONS	DES.	DRW.	CHK.	DCCO	CDOT

TRANSYSTEMS
222 SOUTH RIVERSIDE PLAZA SUITE 610
CHICAGO, ILLINOIS 60606

SKIDMORE, OWINGS & MERRILL LLP
224 SOUTH MICHIGAN AVENUE, SUITE 1000
CHICAGO, ILLINOIS 60604

CHICAGO DEPARTMENT
OF TRANSPORTATION
DIVISION OF ENGINEERING

STATE / LAKE LOOP ELEVATED STATION
200 NORTH STATE STREET, CHICAGO, IL 60601

SPEC. NO.

HISTORIC CANOPY PLANS, SECTIONS & DETAILS

DRAWING NO. S-680

CDOT PROJECT D-1-209 | DATE: 9/9/2022 | REVISION NO.4

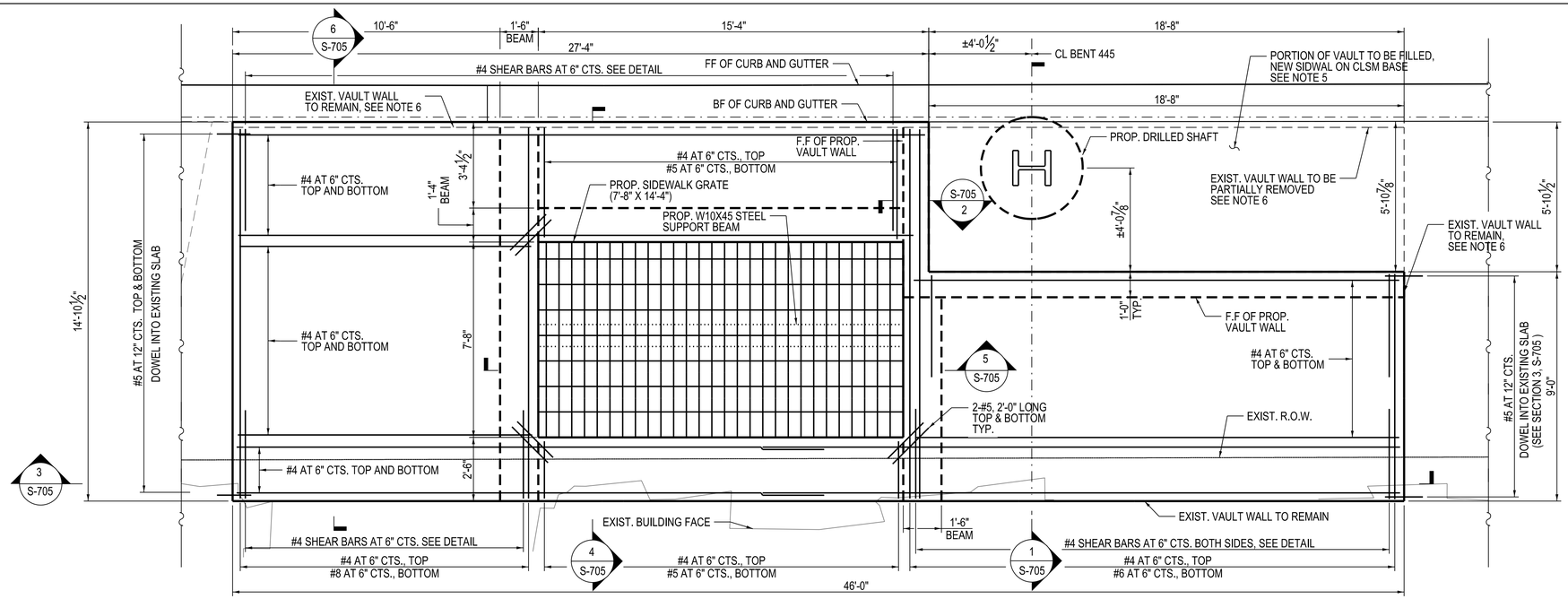

1 VAULT SLAB PLAN

3/8" = 1'-0"

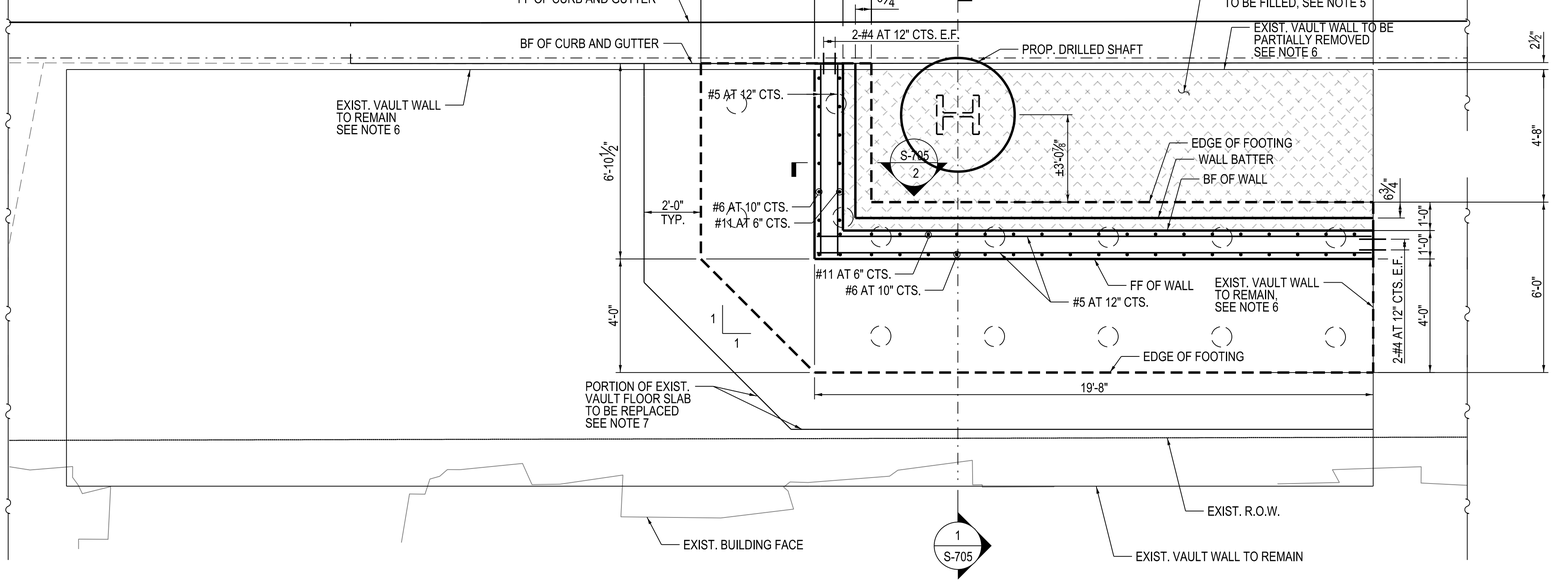

2 VAULT WALL PLAN

3/8" = 1'-0"

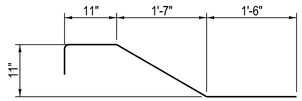

3 SHEAR BAR DETAIL

NOTES:

1. FOR FOOTING REINFORCEMENT AND MICROPILE SPACING, SEE S-703.
2. FOR ADDITIONAL VAULT LOCATION 1 DETAILS, AND EDGE BEAM REINFORCEMENT, SEE S-705
3. FOR TYPICAL VAULT RECONSTRUCTION DETAILS, SEE S-708.
4. FOR GENERAL NOTES, SEE S-708.
5. CONTROLLED LOW STRENGTH MATERIAL (CLSM) SHALL BE USED TO FILL BACK VAULT.
6. SEE SHEETS SD-111 AND SD-112 FOR REMOVAL DETAILS AT EXISTING VAULTS.
7. SEE DETAIL 5 ON S-706 FOR TYPICAL VAULT FLOOR SLAB REPLACEMENT DETAIL.

LEGEND

- LIMITS OF SIDEWALK VAULT TO BE FILLED
- PROPOSED MICROPILE

DESIGN BY:	WJC									
DRAWN BY:	WJC		01/13/2023							
CHECKED BY:	MDS									
APPROVED BY:	MDS	4	7/3/2023	ISSUED FOR BID						
CDOT/APPROVED BY:		NO.	DATE	REVISIONS	DES.	DRW.	CHK.	DCCO	CDOT	

TRANSYSTEMS
222 SOUTH RIVERSIDE PLAZA SUITE 610
CHICAGO, ILLINOIS 60606

SKIDMORE, OWINGS & MERRILL LLP
224 SOUTH MICHIGAN AVENUE, SUITE 1000
CHICAGO, ILLINOIS 60604

ARDMORE RODERICK
1500 W CARROLL AVE SUITE 300
CHICAGO, ILLINOIS 60607

CHICAGO DEPARTMENT OF TRANSPORTATION
DIVISION OF ENGINEERING

STATE / LAKE LOOP ELEVATED STATION
200 NORTH STATE STREET, CHICAGO, IL 60601

VAULTED SIDEWALK RECONSTRUCTION PLAN
LOCATION 1 (190 N. STATE ST.)

CDOT PROJECT D-1-209

DATE: 7/3/2023

SPEC. NO.

DRAWING NO. S-700

REVISION NO.

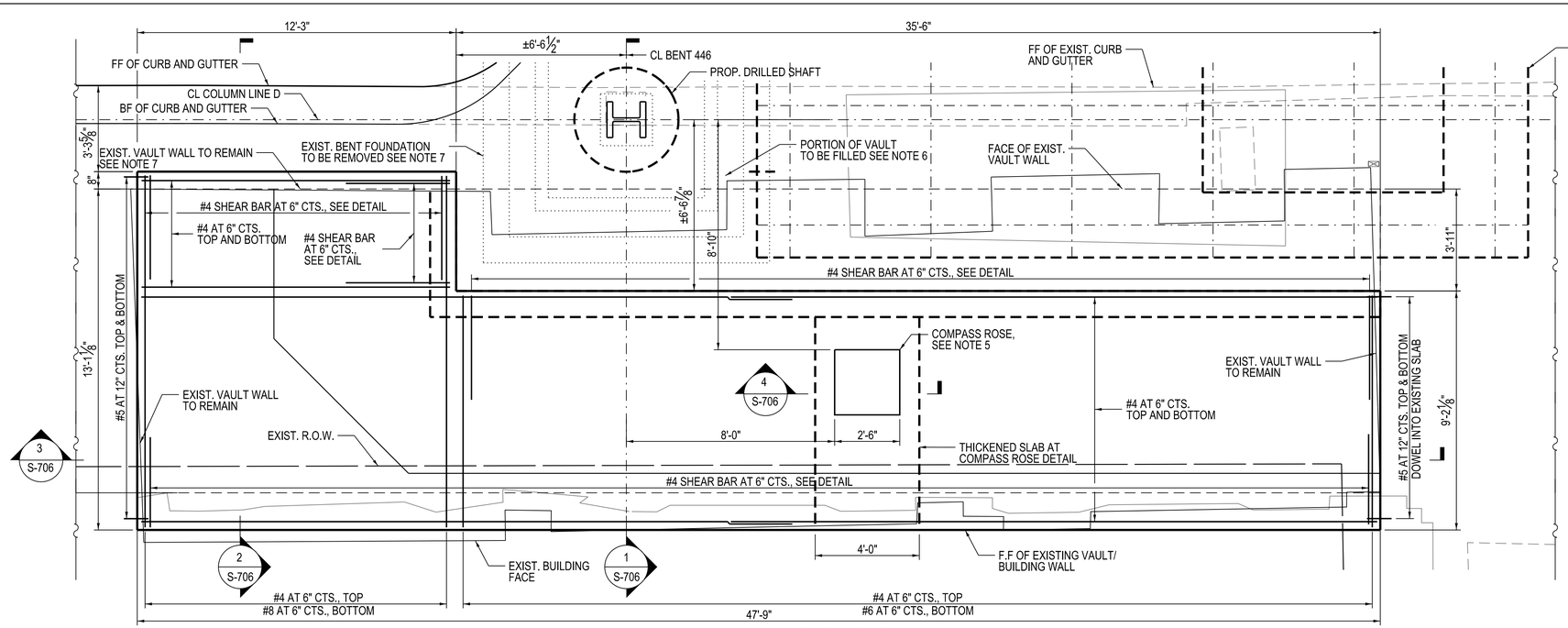

1 VAULT SLAB PLAN

3/8" = 1'-0"

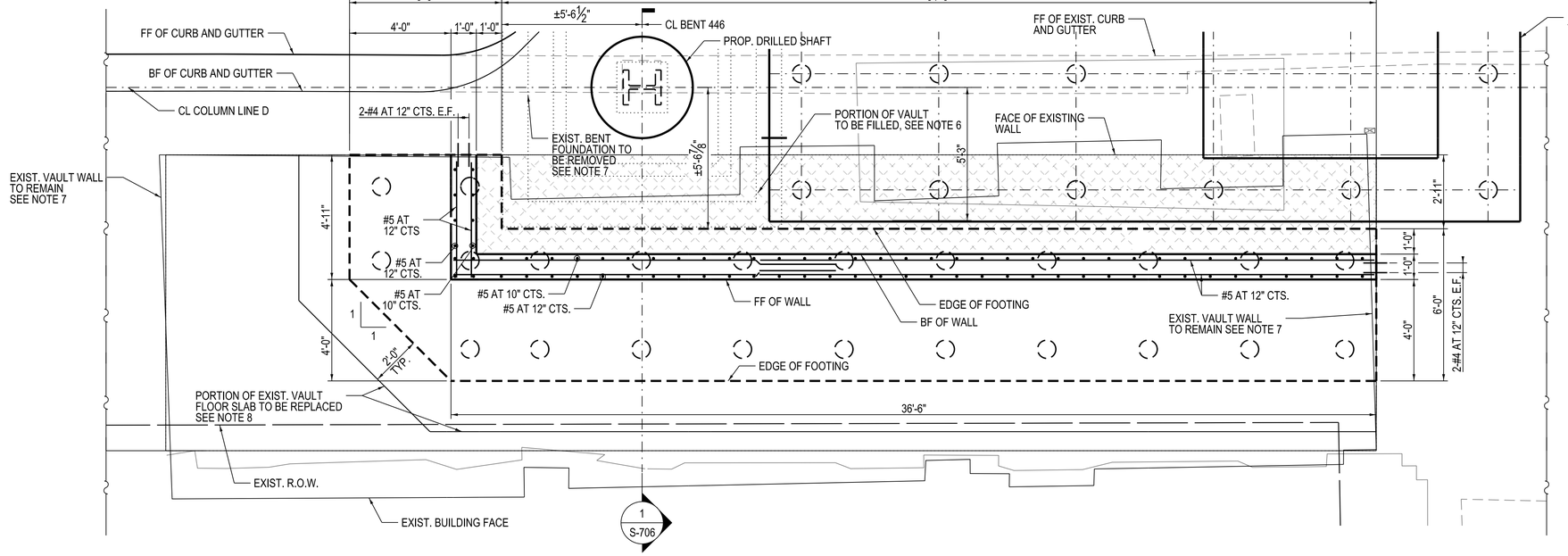

2 VAULT WALL PLAN

3/8" = 1'-0"

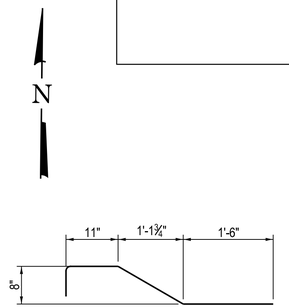

3 SHEAR BAR DETAIL

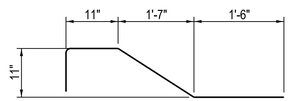

4 SHEAR BAR DETAIL AT THICKENED SLAB DETAIL

NOTES:

1. FOR FOOTING REINFORCEMENT AND MICROPILE SPACING, SEE S-703.
2. FOR ADDITIONAL VAULT LOCATION 2 DETAILS, SEE S-706.
3. FOR TYPICAL VAULT RECONSTRUCTION DETAILS, SEE S-708
4. FOR GENERAL NOTES, SEE S-708.
5. COMPASS ROSE DETAIL SHALL BE CENTERED WITH STATION ACCESS STAIRS. FOR ADDITIONAL DETAILS OF COMAPSS ROSE, SEE SHEET A-701.
6. CONTROLLED LOW STRENGTH MATERIAL (CLSM) SHALL BE USED TO FILL BACK VAULT.
7. SEE SHEETS SD-111 AND SD-112 FOR REMOVAL DETAILS AT EXISTING VAULTS.
8. SEE DETAIL 5 ON S-706 FOR TYPICAL VAULT FLOOR SLAB REPLACEMENT DETAIL.

LEGEND

LIMITS OF SIDEWALK VAULT TO BE FILLED

PROPOSED MICROPILE

DESIGN BY:	WJC									
DRAWN BY:	WJC									
CHECKED BY:	MDS									
APPROVED BY:	MDS	4	7/3/2023	ISSUED FOR BID						
CDOT/APPROVED BY:		NO.	DATE	REVISIONS	DES.	DRW.	CHK.	DCCO	CDOT	

TRANSYSTEMS
222 SOUTH RIVERSIDE PLAZA SUITE 610
CHICAGO, ILLINOIS 60606

SKIDMORE, OWINGS & MERRILL LLP
224 SOUTH MICHIGAN AVENUE, SUITE 1000
CHICAGO, ILLINOIS 60604

ARDMORE RODERICK
1500 W CARROLL AVE SUITE 300
CHICAGO, ILLINOIS 60607

CHICAGO DEPARTMENT OF TRANSPORTATION
DIVISION OF ENGINEERING

STATE / LAKE LOOP ELEVATED STATION
200 NORTH STATE STREET, CHICAGO, IL 60601

VAULTED SIDEWALK RECONSTRUCTION PLAN
LOCATION 2 (190 N. STATE ST.)

CDOT PROJECT D-1-209

DATE: 7/3/2023

SPEC. NO.

DRAWING NO. S-701

REVISION NO.

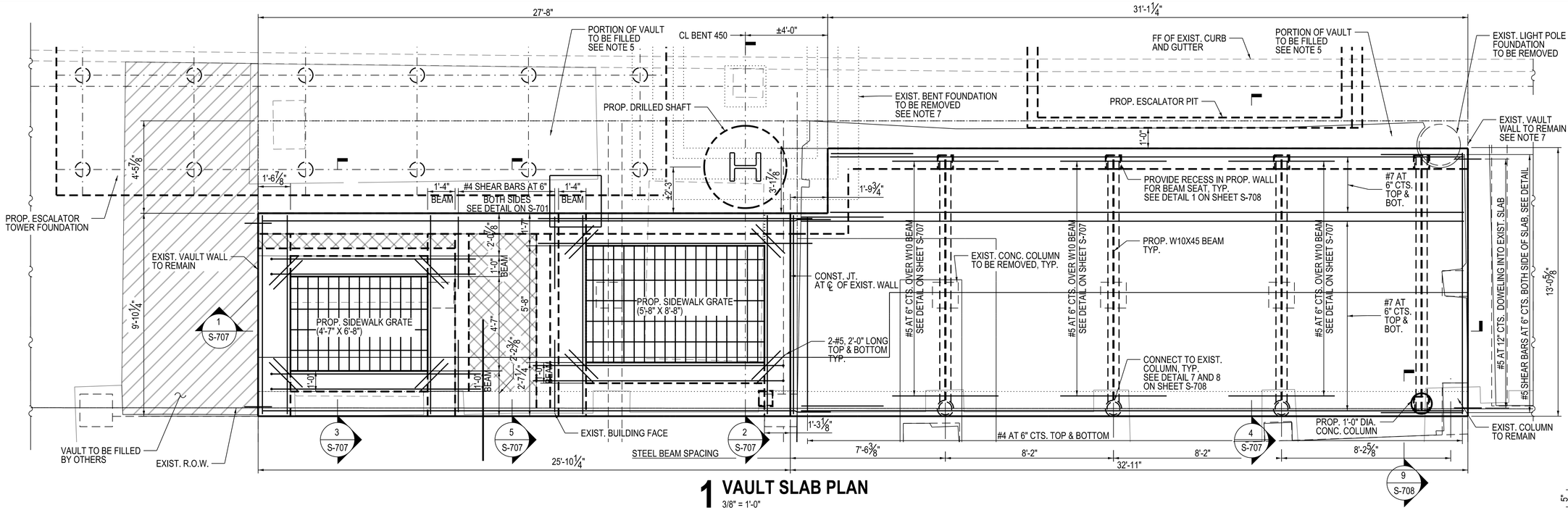

1 VAULT SLAB PLAN

3/8" = 1'-0"

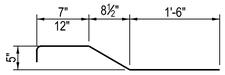

3 SHEAR BAR DETAIL

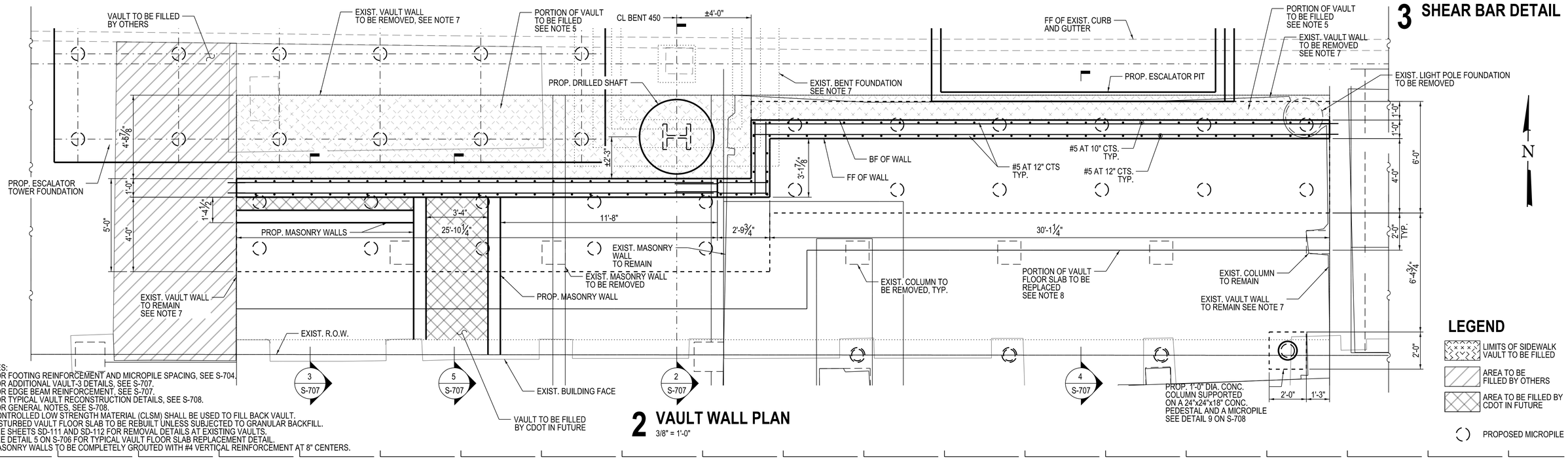

2 VAULT WALL PLAN

3/8" = 1'-0"

NOTES:
1. FOR FOOTING REINFORCEMENT AND MICROPILE SPACING, SEE S-704.
2. FOR ADDITIONAL VAULT-3 DETAILS, SEE S-707.
   FOR EDGE BEAM REINFORCEMENT, SEE S-707.
3. FOR TYPICAL VAULT RECONSTRUCTION DETAILS, SEE S-708.
4. FOR GENERAL NOTES, SEE S-708.
5. CONTROLLED LOW STRENGTH MATERIAL (CLSM) SHALL BE USED TO FILL BACK VAULT.
6. DISTURBED VAULT FLOOR SLAB TO BE REBUILT UNLESS SUBJECTED TO GRANULAR BACKFILL.
7. SEE SHEETS SD-111 AND SD-112 FOR REMOVAL DETAILS AT EXISTING VAULTS.
8. SEE DETAIL 5 ON S-706 FOR TYPICAL VAULT FLOOR SLAB REPLACEMENT DETAIL.
9. MASONRY WALLS TO BE COMPLETELY GROUTED WITH #4 VERTICAL REINFORCEMENT AT 8" CENTERS.

LEGEND

- LIMITS OF SIDEWALK VAULT TO BE FILLED
- AREA TO BE FILLED BY OTHERS
- AREA TO BE FILLED BY CDOT IN FUTURE
- PROPOSED MICROPILE

DESIGN BY:	WJC									
DRAWN BY:	WJC									
CHECKED BY:	MDS									
APPROVED BY:	MDS	4	7/3/2023	ISSUED FOR BID						
CDOT/APPROVED BY:		NO.	DATE	REVISIONS	DES.	DRW.	CHK.	DCCO	CDOT	

TRANSYSTEMS
222 SOUTH RIVERSIDE PLAZA SUITE 610
CHICAGO, ILLINOIS 60606

SKIDMORE, OWINGS & MERRILL LLP
224 SOUTH MICHIGAN AVENUE, SUITE 1000
CHICAGO, ILLINOIS 60604

ARDMORE RODERICK
1500 W CARROLL AVE SUITE 300
CHICAGO, ILLINOIS 60607

CHICAGO DEPARTMENT OF TRANSPORTATION
DIVISION OF ENGINEERING

STATE / LAKE LOOP ELEVATED STATION
200 NORTH STATE STREET, CHICAGO, IL 60601

VAULTED SIDEWALK RECONSTRUCTION PLAN
LOCATION 3 (177 N. STATE ST.)

CDOT PROJECT D-1-209 | DATE: 7/3/2023

SPEC. NO.

DRAWING NO. S-702

REVISION NO.

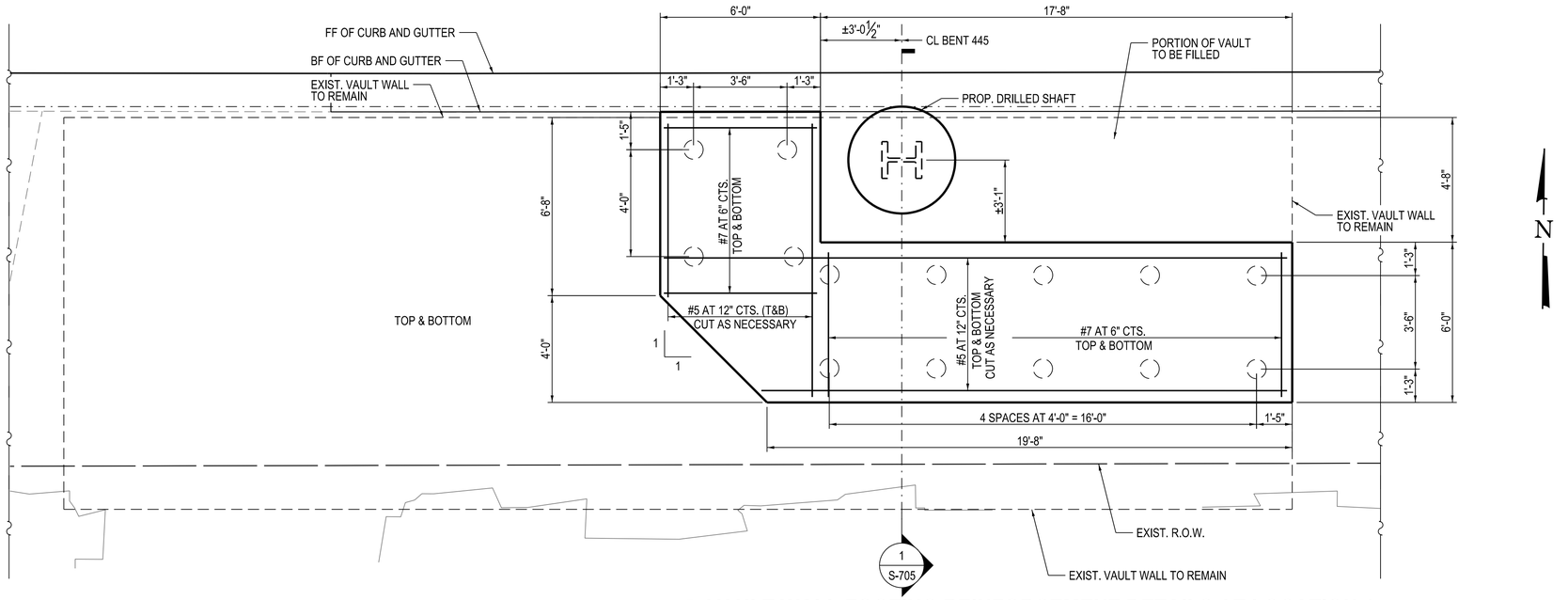

1 VAULT WALL FOOTING REINFORCEMENT DETAILS AT LOCATION 1

3/8" = 1'-0"

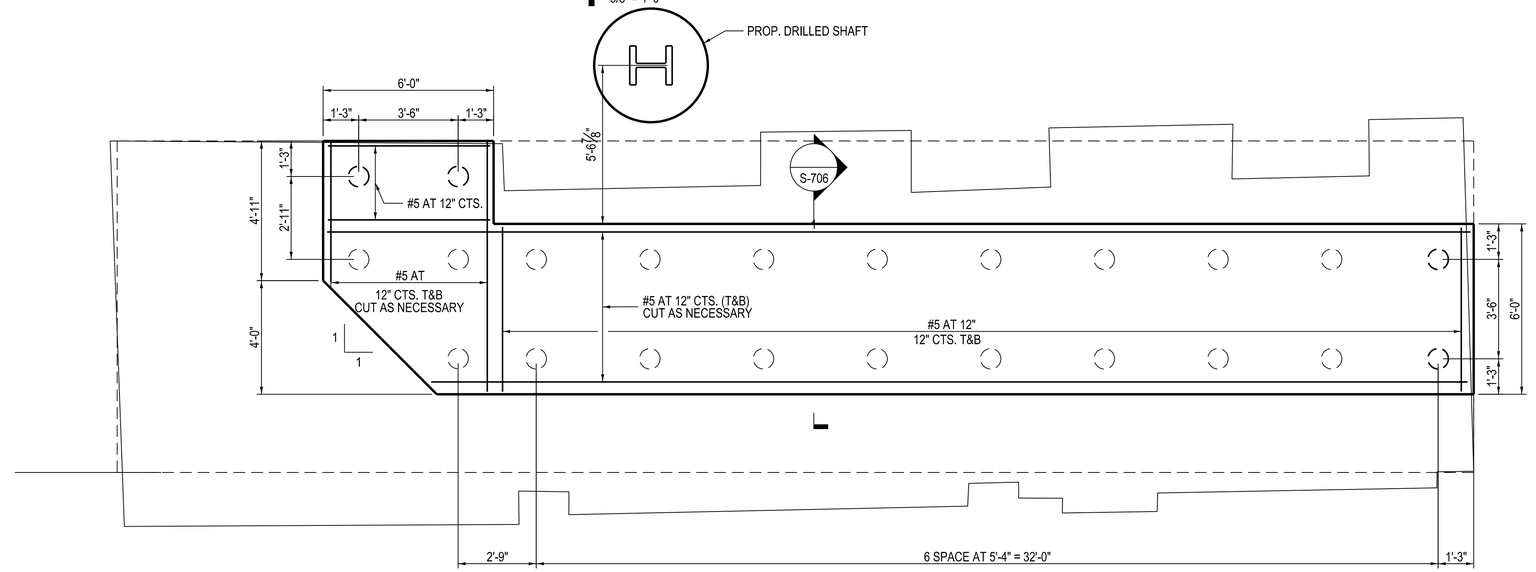

2 VAULT WALL FOOTING REINFORCEMENT DETAILS AT LOCATION 2

3/8" = 1'-0"

LEGEND

- LIMITS OF SIDEWALK VAULT TO BE FILLED
- PROPOSED MICROPILE

NOTES:

1. SEE SHEET S-500 FOR MICROPILE DETIALS
2. FOR GENERAL NOTES SEE SHEET S-708

DESIGN BY:										
DRAWN BY:										
CHECKED BY:										
APPROVED BY:		4	7/3/2023	ISSUED FOR BID						
CDOT/APPROVED BY:		NO.	DATE	REVISIONS	DES.	DRW.	CHK.	DCCO	CDOT	

TRANSYSTEMS
222 SOUTH RIVERSIDE PLAZA SUITE 610
CHICAGO, ILLINOIS 60606

SKIDMORE, OWINGS & MERRILL LLP
224 SOUTH MICHIGAN AVENUE, SUITE 1000
CHICAGO, ILLINOIS 60604

ARDMORE RODERICK
1500 W CARROLL AVE SUITE 300
CHICAGO, ILLINOIS 60607

CHICAGO DEPARTMENT OF TRANSPORTATION
DIVISION OF ENGINEERING

STATE / LAKE LOOP ELEVATED STATION
200 NORTH STATE STREET, CHICAGO, IL 60601

VAULTED SIDEWALK RECONSTRUCTION
FOOTING PLANS - LOCATION 1 & 2 (190 N. STATE ST.)

CDOT PROJECT D-1-209 | DATE: 7/3/2023

SPEC. NO.

DRAWING NO. S-703

REVISION NO.

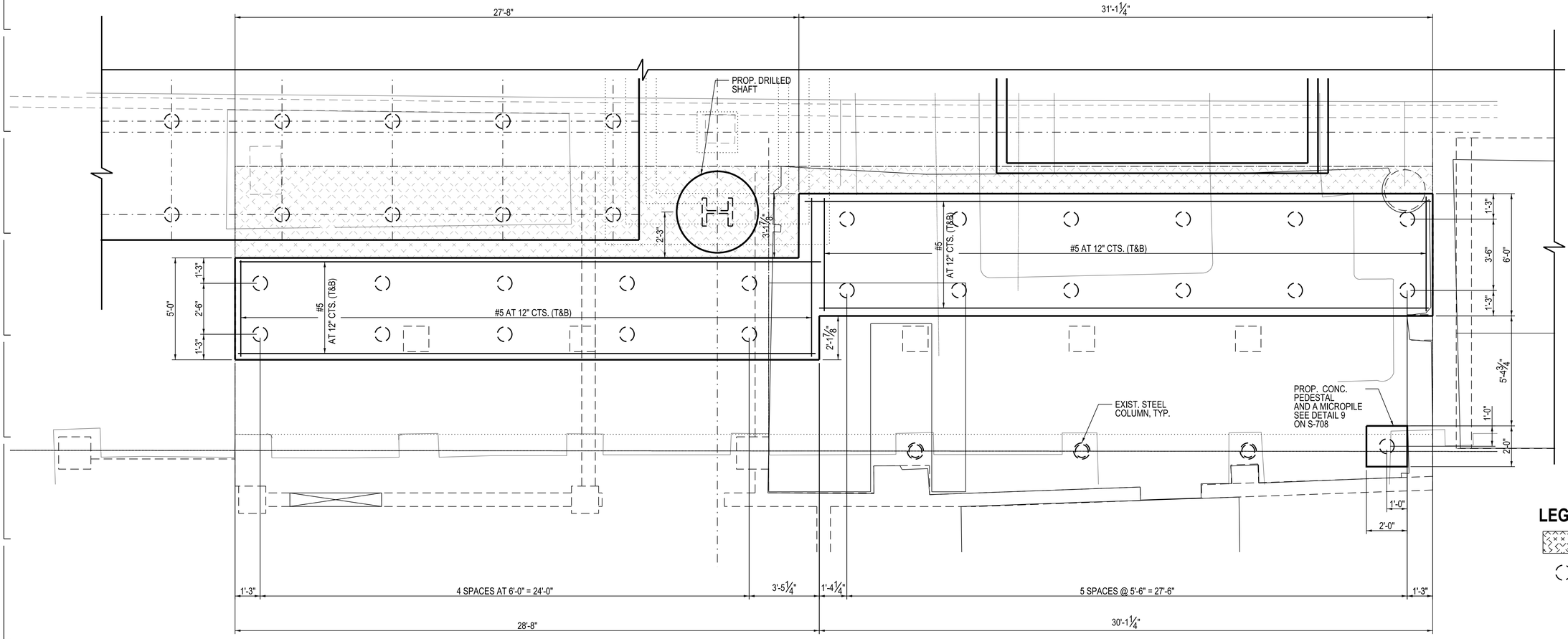

LEGEND

- LIMITS OF SIDEWALK VAULT TO BE FILLED
- PROPOSED MICROPILE

NOTES:

1. SEE SHEET S-500 FOR MICROPILE DETIALS
2. FOR GENERAL NOTES SEE SHEET S-708

3 VAULT WALL FOOTING REINFORCEMENT DETAILS AT LOCATION 3

3/8" = 1'-0"

DESIGN BY:										
DRAWN BY:										
CHECKED BY:										
APPROVED BY:		4	7/3/2023	ISSUED FOR BID						
CDOT/APPROVED BY:		NO.	DATE	REVISIONS	DES.	DRW.	CHK.	DCCO	CDOT	

TRANSYSTEMS
222 SOUTH RIVERSIDE PLAZA SUITE 610
CHICAGO, ILLINOIS 60606

SKIDMORE, OWINGS & MERRILL LLP
224 SOUTH MICHIGAN AVENUE, SUITE 1000
CHICAGO, ILLINOIS 60604

ARDMORE RODERICK
1500 W CARROLL AVE SUITE 300
CHICAGO, ILLINOIS 60607

CHICAGO DEPARTMENT OF TRANSPORTATION
DIVISION OF ENGINEERING

STATE / LAKE LOOP ELEVATED STATION
200 NORTH STATE STREET, CHICAGO, IL 60601

VAULTED SIDEWALK RECONSTRUCTION
FOOTING PLAN - LOCATION 3 (190 N. STATE ST.)

CDOT PROJECT D-1-209 | DATE: 7/3/2023

SPEC. NO.

DRAWING NO. S-704

REVISION NO.

NOTES:

1. FOR GENERAL NOTES, SEE S-708
2. SIDEWALK GRATE BEARING BARS SHALL BE DESIGNED BY MANUFACTURER TO SUPPORT AASHTO HL-93 WHEEL LOADING AND SHALL SPAN IN THE NORTH -SOUTH DIRECTION. DETAILING PROVIDED CAN ACCOMMODATE A MAX. BEARING BAR DEPTH OF 5". CLEAR OPENING BETWEEN BEARING BARS SHALL MEET ADA REQUIREMENTS.
3. THE CONTRACTOR SHALL FIELD CHECK AND VERIFY ALL DIMENSIONS AND EXISTING CONDITIONS PRIOR TO CONSTRUCTION.THE CONTRACTOR SHALL NOTIFY THE ENGINEER IMMEDIATELY OF ANY DISCREPANCIES BETWEEN CONSTRUCTION DOCUMENTS AND ACTUAL FIELD CONDITIONS
4. MINIMUM BAR LAP FOR #4 BAR IS 2'-8".
5. SEE SHEET NO. S-500 FOR TYPICAL MICROPILE DETAILS.
6. BOTTOM OF FOOTING ELEVATION IS BASED ON BEST AVAILABLE INFORMATION, AND IS SUBJECT TO SLIGHT VARIATION. FINAL ELEVATION WILL BE SET BY MAINTAINING A MINIMUM OF 1'-0" FROM TOP OF EXISTING VAULT FLOOR SLAB TO TOP OF FOOTING.
7. SEE DETAIL 5 ON S-706 FOR TYPICAL VAULT FLOOR SLAB REPLACEMENT DETAIL.

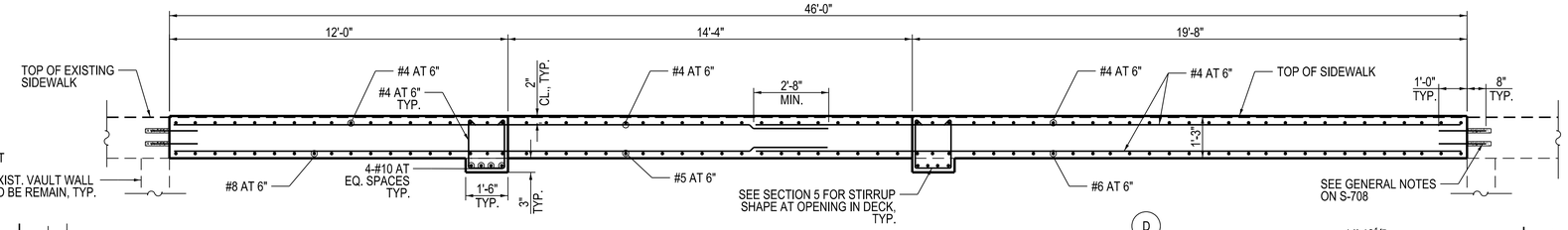

3 SECTION THRU VAULT
NTS

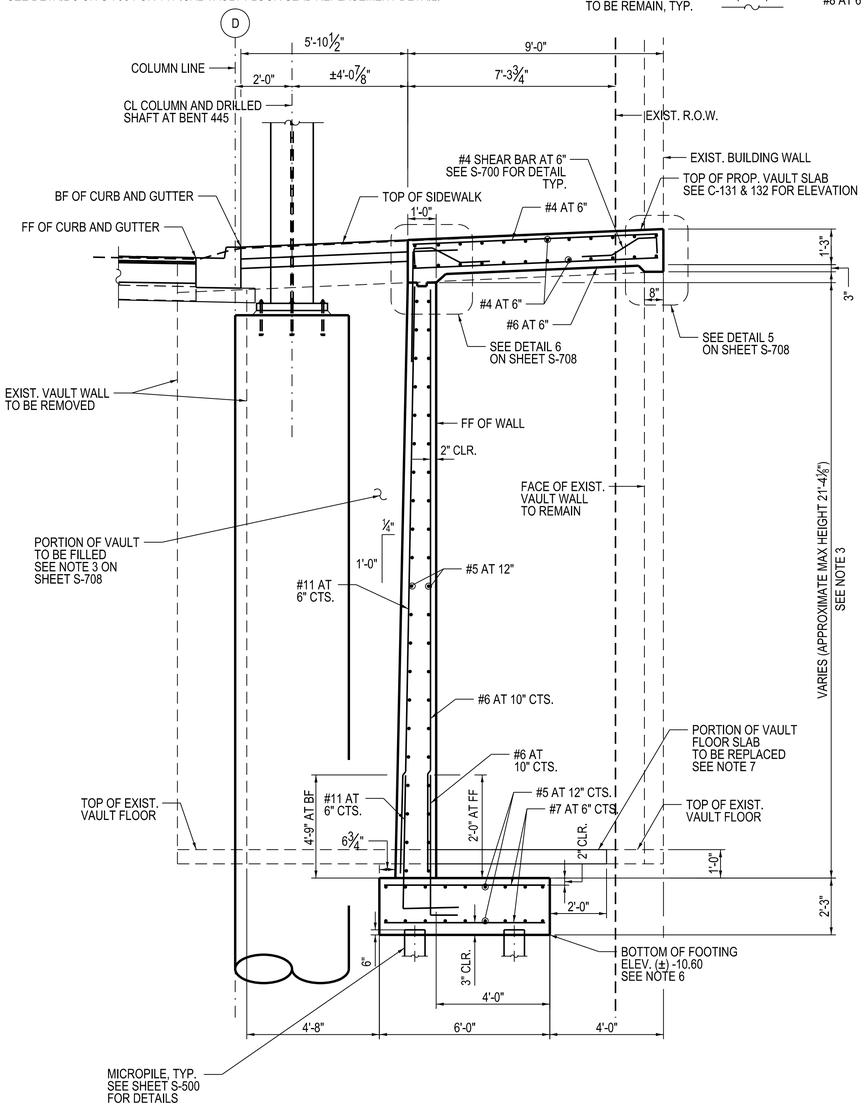

1 SECTION THRU VAULT EAST-WEST SEGMENT
NTS

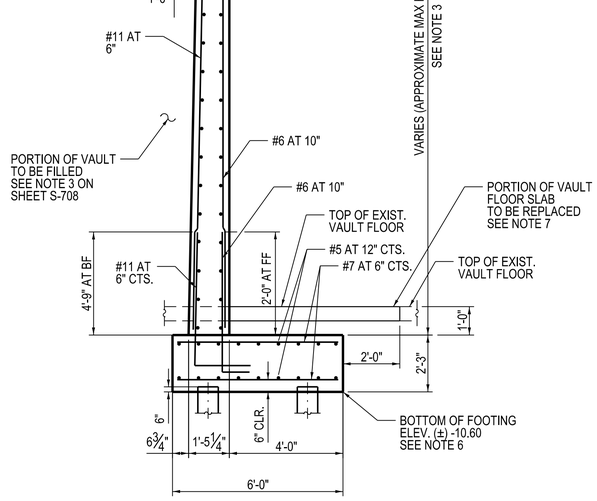

2 SECTION THRU VAULT NORTH-SOUTH SEGMENT
NTS

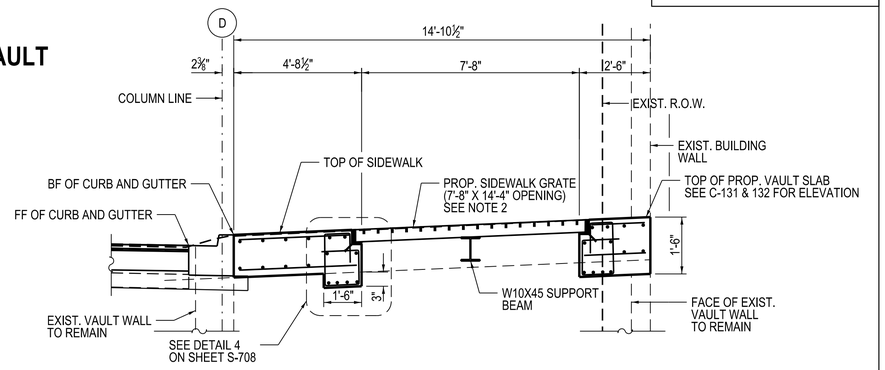

4 SECTION THRU SIDEWALK GRATE
NTS

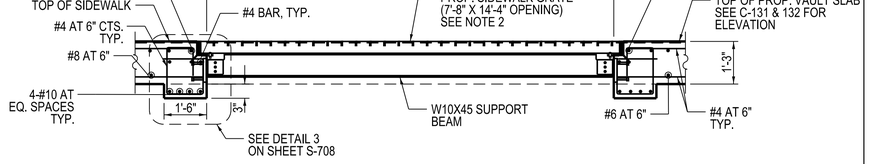

5 SECTION THRU SIDEWALK GRATE
NTS

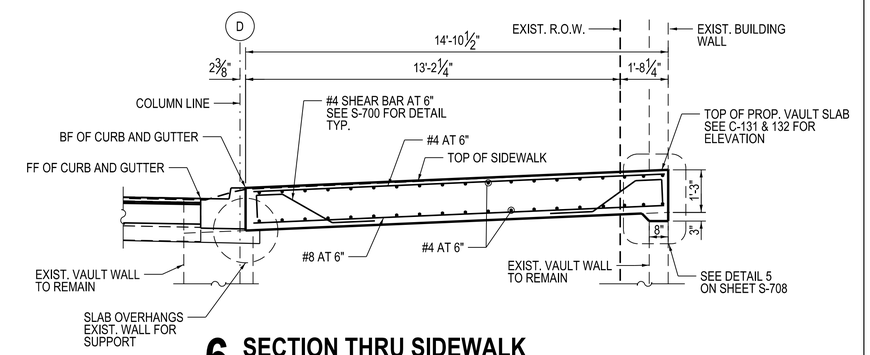

6 SECTION THRU SIDEWALK
NTS

DESIGN BY:	OJS									
DRAWN BY:	AS									
CHECKED BY:	AS									
APPROVED BY:	BS	4	7/3/2023	ISSUED FOR BID						
CDOT/APPROVED BY:		NO.	DATE	REVISIONS	DES.	DRW.	CHK.	DCCO	CDOT	

TRANSYSTEMS
222 SOUTH RIVERSIDE PLAZA SUITE 610
CHICAGO, ILLINOIS 60606

SKIDMORE, OWINGS & MERRILL LLP
224 SOUTH MICHIGAN AVENUE, SUITE 1000
CHICAGO, ILLINOIS 60604

ARDMORE RODERICK
1500 W CARROLL AVE SUITE 300
CHICAGO, ILLINOIS 60607

CHICAGO DEPARTMENT OF TRANSPORTATION
DIVISION OF ENGINEERING

STATE / LAKE LOOP ELEVATED STATION
200 NORTH STATE STREET, CHICAGO, IL 60601

SPEC. NO.

VAULTED SIDEWALK RECONSTRUCTION DETAILS
LOCATION 1 (190 N. STATE ST.)

DRAWING NO.
S-705

CDOT PROJECT D-1-209

DATE: 7/3/2023

REVISION NO.

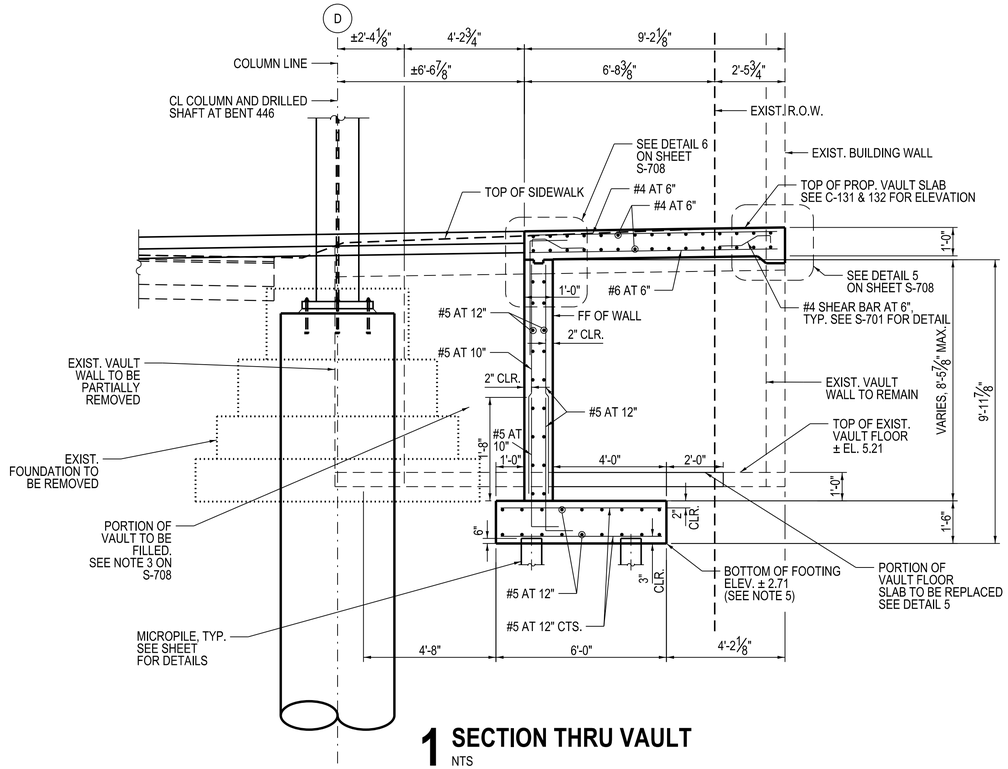

1 SECTION THRU VAULT
NTS

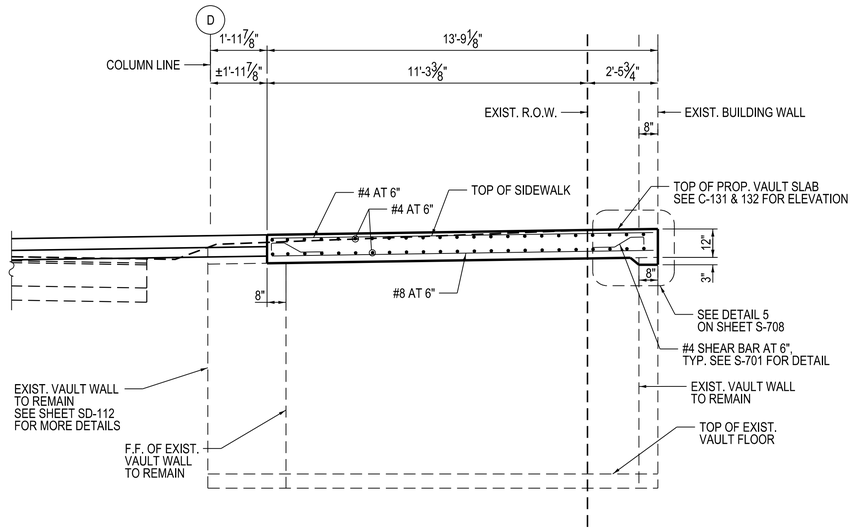

2 SECTION THRU VAULT
NTS

NOTES:

1. FOR GENERAL NOTES, SEE S-708
2. THE CONTRACTOR SHALL FIELD CHECK AND VERIFY ALL DIMENSIONS AND EXISTING CONDITIONS PRIOR TO CONSTRUCTION. THE CONTRACTOR SHALL NOTIFY THE ENGINEER IMMEDIATELY OF ANY DISCREPANCIES BETWEEN CONSTRUCTION DOCUMENTS AND ACTUAL FIELD CONDITIONS
3. MINIMUM BAR LAP FOR #4 BAR IS 2'-8".
4. SEE SHEET S-500 FOR TYPICAL MICROPILE DETAILS.
5. BOTTOM OF FOOTING ELEVATION IS BASED ON BEST AVAILABLE INFORMATION, AND IS SUBJECT TO SLIGHT VARIATION. FINAL ELEVATION WILL BE SET BY MAINTAINING A MINIMUM OF 1'-0" FROM TOP OF EXISTING VAULT FLOOR SLAB TO TOP OF FOOTING.

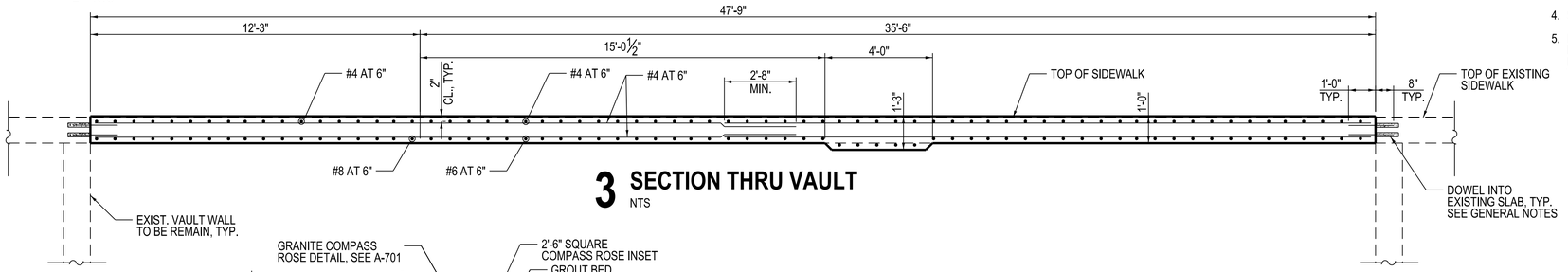

3 SECTION THRU VAULT
NTS

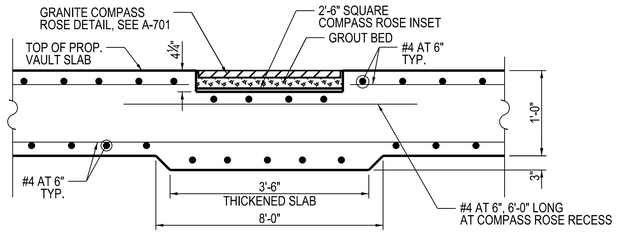

4 SECTION THRU VAULT
NTS

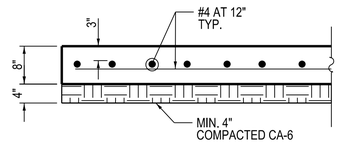

5 TYPICAL VAULT FLOOR SLAB REPLACEMENT DETAIL
NTS

DESIGN BY:	JOS								
DRAWN BY:	AS		01/13/2023						
CHECKED BY:	AS								
APPROVED BY:	SB	4	7/3/2023	ISSUED FOR BID					
CDOT/APPROVED BY:		NO.	DATE	REVISIONS	DES.	DRW.	CHK.	DCCO	CDOT

TRANSYSTEMS
222 SOUTH RIVERSIDE PLAZA SUITE 610
CHICAGO, ILLINOIS 60606

SKIDMORE, OWINGS & MERRILL LLP
224 SOUTH MICHIGAN AVENUE, SUITE 1000
CHICAGO, ILLINOIS 60604

ARDMORE RODERICK
1500 W CARROLL AVE SUITE 300
CHICAGO, ILLINOIS 60607

CHICAGO DEPARTMENT OF TRANSPORTATION
DIVISION OF ENGINEERING

STATE / LAKE LOOP ELEVATED STATION
200 NORTH STATE STREET, CHICAGO, IL 60601

SPEC. NO.

VAULTED SIDEWALK RECONSTRUCTION DETAILS
LOCATION 2 (190 N. STATE ST.)

DRAWING NO.
S-706

CDOT PROJECT D-1-209

DATE: 7/3/2023

REVISION NO.

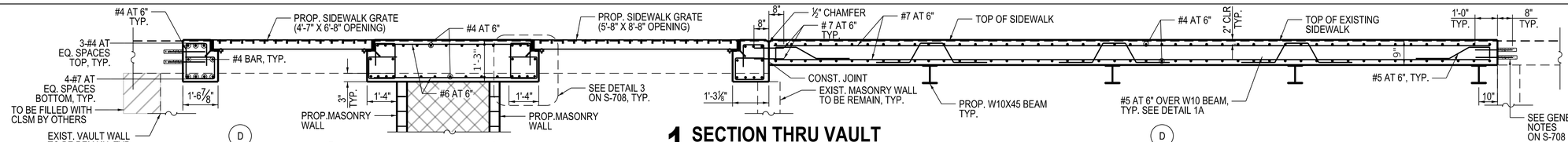

1 SECTION THRU VAULT
NTS

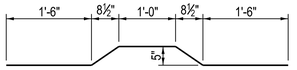

1A SHEAR BAR OVER BEAM
NTS

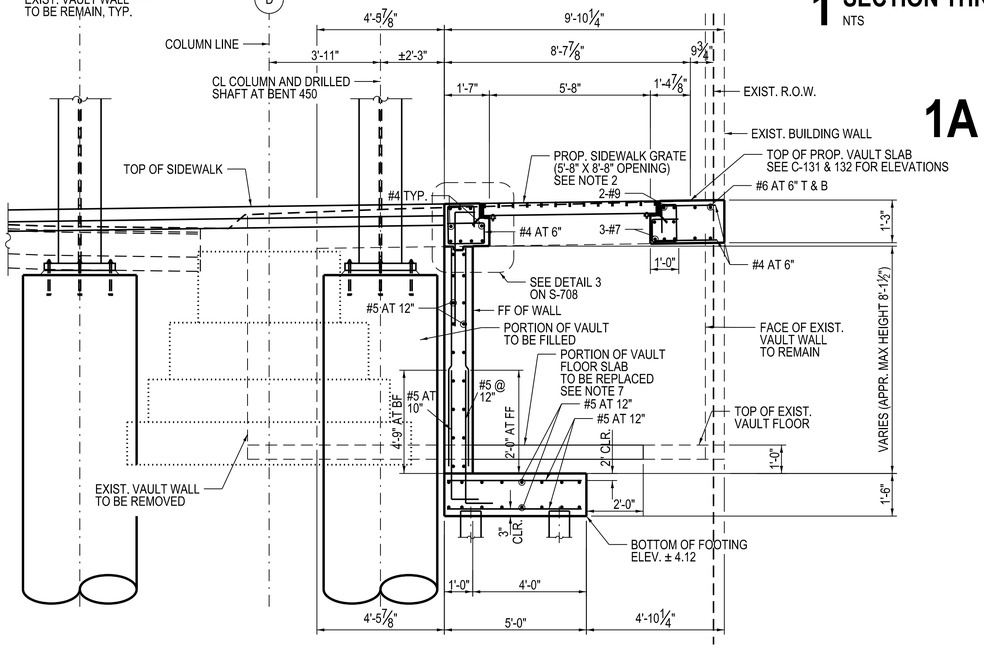

2 SECTION THRU VAULT
NTS

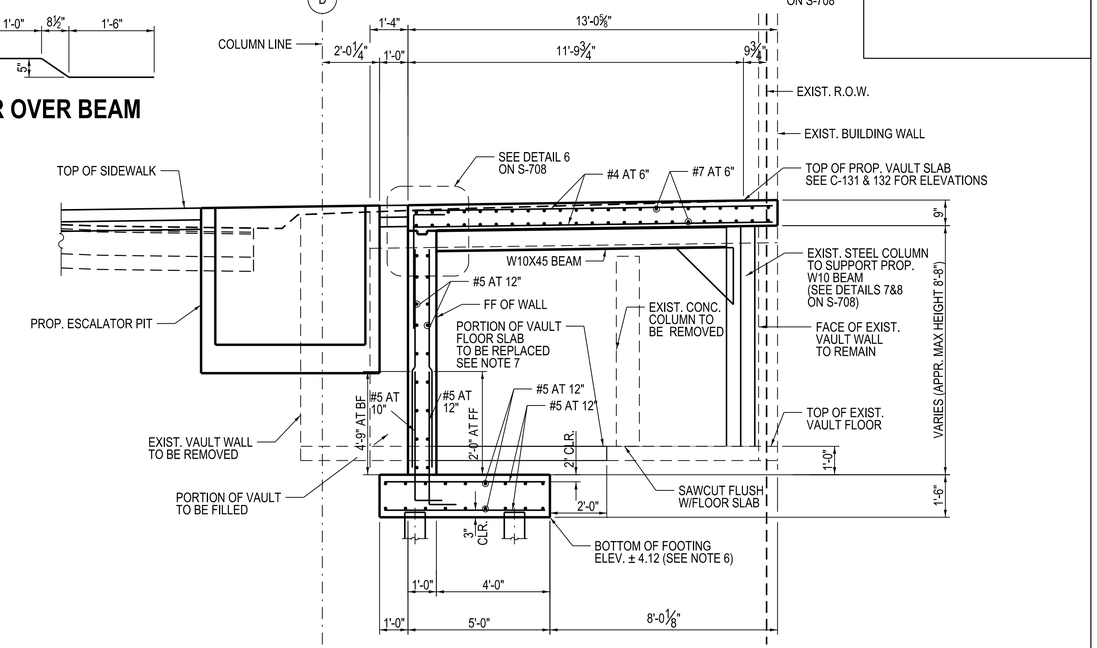

4 SECTION THRU VAULT
NTS

LEGEND

AREA TO BE FILLED BY OTHERS

AREA TO BE FILLED BY CDOT IN FUTURE

NOTES:

1. FOR GENERAL NOTES, SEE S-708
2. SIDEWALK GRATE BEARING BARS SHALL BE DESIGNED BY MANUFACTURER TO SUPPORT AASHTO HL-93 WHEEL LOADING, AND SHALL SPAN IN THE NORTH -SOUTH DIRECTION. DETAILING PROVIDE TO ACCOMMODATE A MAX. BEARING BAR DEPTH OF 5". CLEAR OPENING BETWEEN BEARING BARS SHALL MEET ADA REQUIREMENTS.
3. THE CONTRACTOR SHALL FIELD CHECK AND VERIFY ALL DIMENSIONS AND EXISTING CONDITIONS PRIOR TO CONSTRUCTION. THE CONTRACTOR SHALL NOTIFY THE ENGINEER IMMEDIATELY OF ANY DISCREPANCIES BETWEEN CONSTRUCTION DOCUMENTS AND ACTUAL FIELD CONDITIONS
4. MINIMUM BAR LAP FOR #4 BAR IS 2'-8".
5. SEE SHEET S-704 FOR TYPICAL MICROPILE DETAILS.
6. BOTTOM OF FOOTING ELEVATION IS BASED ON BEST AVAILABLE INFORMATION, AND SUBJECT TO SLIGHT VARIATION. FINAL ELEVATION WILL BE SET BY MAINTAINING A MINIMUM OF 1'-0" FROM TOP OF EXISTING VAULT FLOOR SLAB TO TOP OF FOOTING.
7. SEE DETIAL 5 ON S-706 FOR TYPICAL VAULT FLOOR SLAB REPLACEMENT DETAIL.

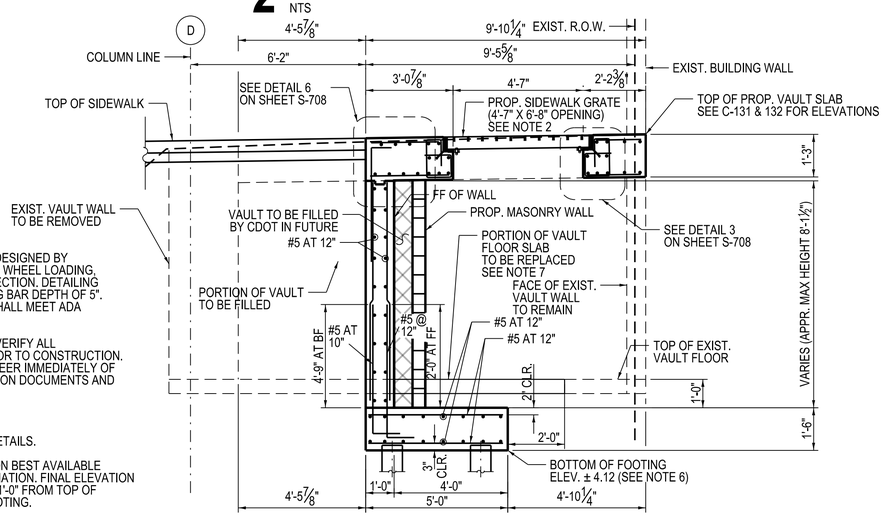

3 SECTION THRU VAULT
NTS

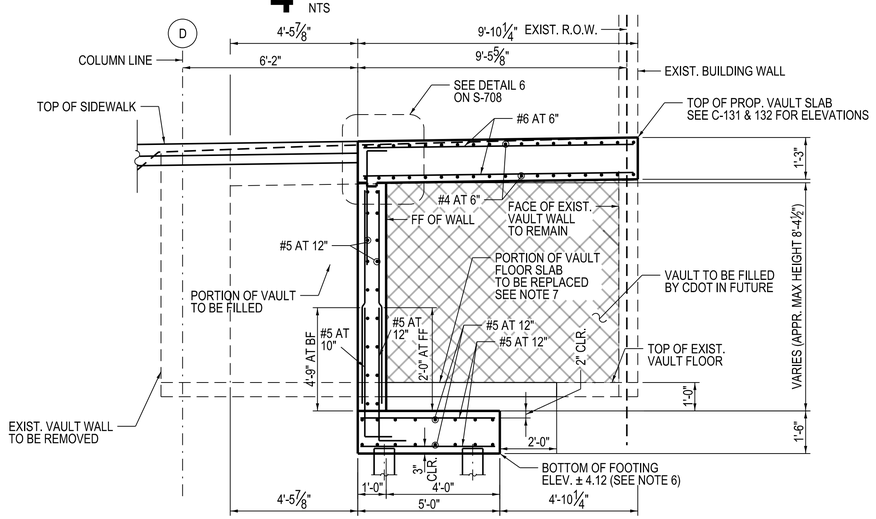

5 SECTION THRU VAULT
NTS

DESIGN BY:	WJC								
DRAWN BY:	WJC								
CHECKED BY:	MDS								
APPROVED BY:	MDS	4	7/3/2023	ISSUED FOR BID					
CDOT/APPROVED BY:		NO.	DATE	REVISIONS	DES.	DRW.	CHK.	DCCO	CDOT

TRANSYSTEMS
222 SOUTH RIVERSIDE PLAZA SUITE 610
CHICAGO, ILLINOIS 60606

SKIDMORE, OWINGS & MERRILL LLP
224 SOUTH MICHIGAN AVENUE, SUITE 1000
CHICAGO, ILLINOIS 60604

ARDMORE RODERICK
1500 W CARROLL AVE SUITE 300
CHICAGO, ILLINOIS 60607

CHICAGO DEPARTMENT OF TRANSPORTATION
DIVISION OF ENGINEERING

STATE / LAKE LOOP ELEVATED STATION
200 NORTH STATE STREET, CHICAGO, IL 60601

VAULTED SIDEWALK RECONSTRUCTION DETAILS
LOCATION 3 (177 N. STATE ST.)

CDOT PROJECT D-1-209 | DATE: 7/3/2023

SPEC. NO.

DRAWING NO. S-707

REVISION NO.

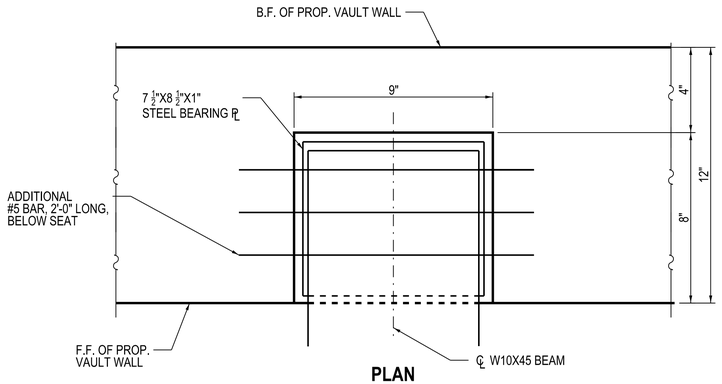

PLAN

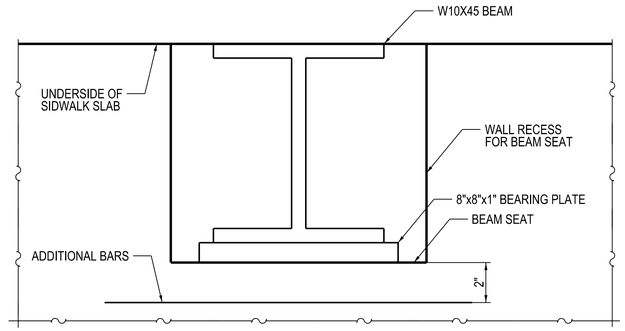

ELEVATION

GENERAL NOTES:

1. FOR TOP OF SIDEWALK SLAB ELEVATION SEE SHEETS C-131 AND C-132.
2. DRILL AND GROUT BARS INTO EXISTING CONCRETE. CONTRACTOR TO AVOID DAMAGE TO EXISTING CONCRETE SIDEWALK.
3. BACKFILL VOID SPACE BEHIND NEW VAULT WALL WITH CLSM AS RECOMMENDED IN SGR.
4. THE CONTRACTOR SHALL FIELD CHECK AND VERIFY ALL DIMENSIONS AND EXISTING CONDITIONS PRIOR TO CONSTRUCTION. THE CONTRACTOR SHALL NOTIFY THE ENGINEER IMMEDIATELY OF ANY DISCREPANCIES BETWEEN CONSTRUCTION DOCUMENTS AND ACTUAL FIELD CONDITIONS.
5. ALL CONCRETE SHALL HAVE A COMPRESSIVE STRENGTH AT 28 DAYS (F'c) OF4.0 KSI
6. ALL REINFORCEMENT SHALL BE EPOXY COATED
7. HOOKS SHOWN IN REINFORCEMET SHALL BE IN ACCORDANCE WITH STANDARD DETAILING IN ACI 318 MANUAL.
8. GRATES AT SLAB OPENINGS SHALL HAVE BEARING BARS ORIENTED PERPENDICULAR TO THE NORMAL FLOW OF PEDESTRIAN TRAFFIC
9. PRIOR TO INSTALLATION OF BEAM SUPPORT, AND EXISTING ATTACHMENTS TO COLUMN THAT WILL CONFLICT WITH BEAM SUPPORT SHALL BE REMOVED AND EXISTING COLUMN SHALL BE BLAST CLEANED.
10. ALL WELDING SHALL BE IN CONFORMANCE WITH LASTEST EDITION OF AWS D 1.5.
11. ALL STRUCTURAL STEEL SHALL CONFORM TO THE REQUIREMENTS OF AASHTO M270 GRADE 50.
12. ALL BOLTS SHALL BE ASTM F3125, GRADE A325, TYPE 1, HOT DIPPED GALVANIZED BOLTS.

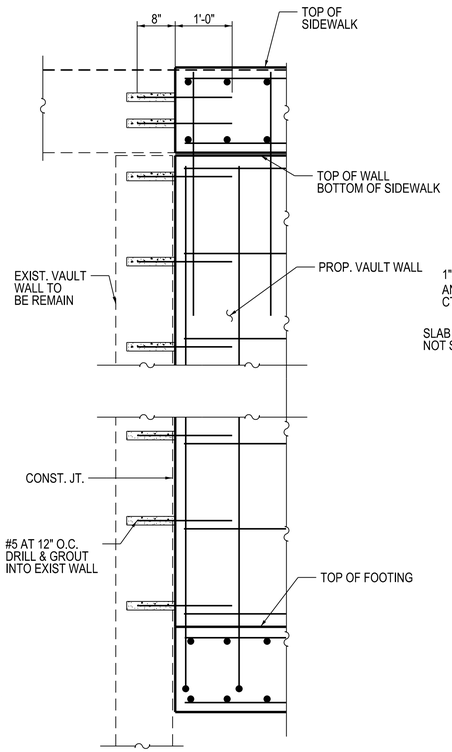

1 BEAM SEAT AT NEW VAULT WALL
NTS

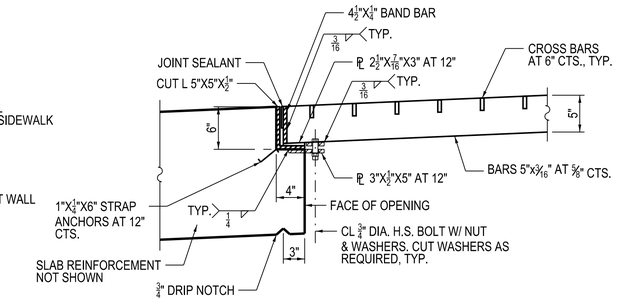

2 VERTICAL SECTION AT PROP. WALL CONNECTION TO EXIST. WALL
NTS

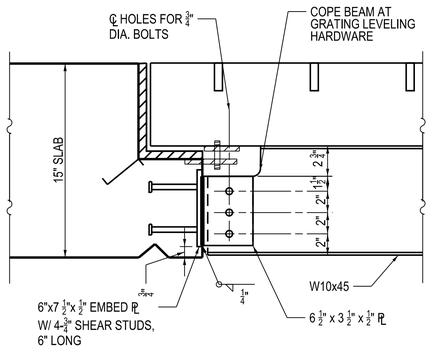

4 GRATE STEEL DETAIL AT BEAM
NTS

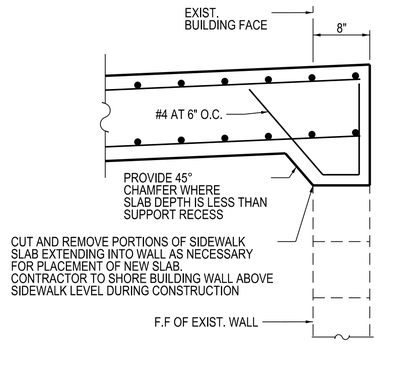

5 CONNECTION DETAILS AT EXISTING WALL
NTS

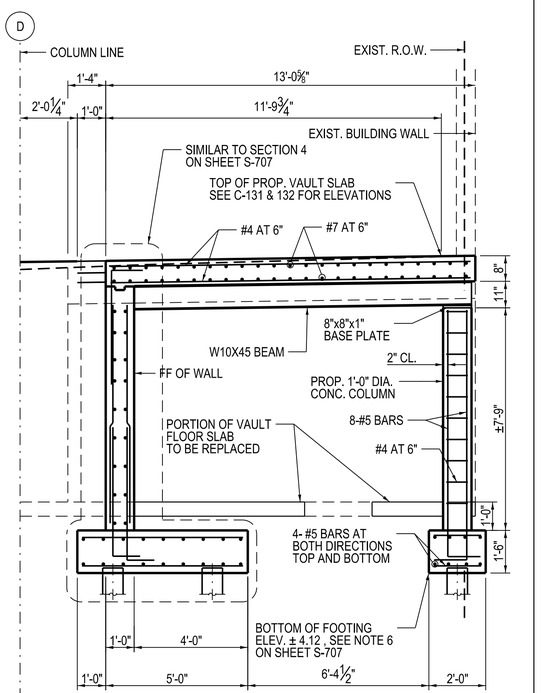

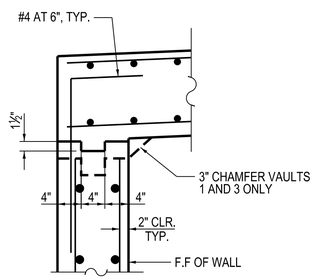

3 GRATE SUPPORT DETAIL
NTS

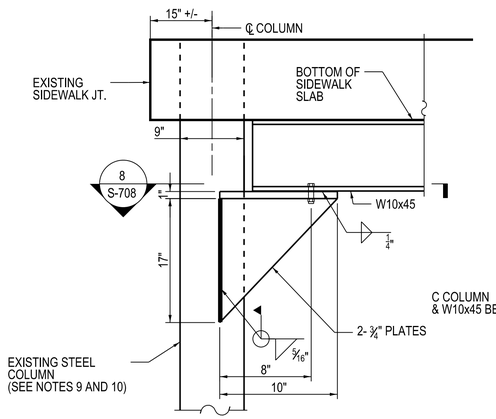

7 BEAM SUPPORT DETAIL AT EXISTING COLUMN
NTS

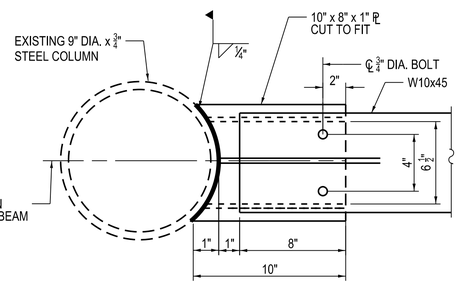

8 SECTION
NTS

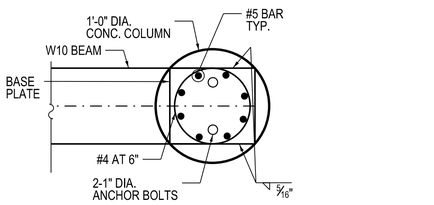

9 BEAM TO CONCRETE COLUMN SECTION AND CONNECTION DETAILS
NTS

6 SHEAR KEY TYPICAL DETAIL
NTS

DESIGN BY:	WJC								
DRAWN BY:	WJC		01/13/2023						
CHECKED BY:	MDS								
APPROVED BY:	MDS	4	7/3/2023	ISSUED FOR BID					
CDOT/APPROVED BY:		NO.	DATE	REVISIONS	DES.	DRW.	CHK.	DCCO	CDOT

TRANSYSTEMS
222 SOUTH RIVERSIDE PLAZA SUITE 610
CHICAGO, ILLINOIS 60606

SKIDMORE, OWINGS & MERRILL LLP
224 SOUTH MICHIGAN AVENUE, SUITE 1000
CHICAGO, ILLINOIS 60604

ARDMORE RODERICK
1500 W CARROLL AVE SUITE 300
CHICAGO, ILLINOIS 60607

CHICAGO DEPARTMENT OF TRANSPORTATION
DIVISION OF ENGINEERING

STATE / LAKE LOOP ELEVATED STATION
200 NORTH STATE STREET, CHICAGO, IL 60601

VAULTED SIDEWALK RECONSTRUCTION
TYPICAL DETAILS

CDOT PROJECT D-1-209 | DATE: 7/3/2023

SPEC. NO.

DRAWING NO. S-708

REVISION NO.

GENERAL NOTES:

1. THESE DRAWINGS SHOW A SUGGESTED CONCEPT AND ASSOCIATED MINIMUM SIZES. DESIGN OF SHORING SYSTEM AND TEMPORARY EARTH RETENTION SHALL BE DONE BY CONTRACTOR'S ENGINEER. SEALED PLANS AND CALCULATIONS SHALL BE SUBMITTED TO THE COMMISSIONER FOR APPROVAL BY AN ILLINOIS LICENSED STRUCTURAL ENGINEER PRIOR TO INSTALLATION OF ANY TEMPORARY SHORING.
2. IT IS THE CONTRACTOR'S RESPONSIBILITY TO MAINTAIN STABILITY OF THE STRUCTURE AT ALL TIMES.
3. FOR ADDITIONAL STRUCTURAL NOTES, SEE SHEETS S-001 THRU S-003 .
4. FOR STRUCTURAL DEMOLITION DETAILS, SEE SD SHEETS.
5. THE CONTRACTOR SHALL FULLY FAMILIARIZE THEIRSELF WITH ALL EXISTING STRUCTURES, SEWER LOCATIONS AND OTHER UTILITIES, SITE CONDITIONS, EXISTING BUILDING DRAWINGS, SURVEYS, AND REPORTS. THE CONTRACTOR SHALL FIELD VERIFY ALL DIMENSIONS AND CONDITIONS SHOWN OR DESCRIBED TO BE EXISTING BY THEIR OWN FIELD SURVEY PRIOR TO THE START OF SHOP DRAWING PREPARATION, FABRICATION, OR SITE CONSTRUCTION. SUCH FIELD SURVEY DETERMINATION UTILIZING TEST PITS TO DETERMINE THE VERTICAL AND HORIZONTAL DIMENSIONAL LOCATIONS OF ALL POTENTIALLY AFFECTED UTILITIES. NOTIFY THE COMMISSIONER OF DISCREPANCIES IN WRITING BEFORE PROCEEDING WITH THE WORK.
6. IT IS THE CONTRACTOR'S RESPONSIBILITY TO INVESTIGATE THE EXISTENCE OF VAULTED SIDEWALKS. HEAVY EQUIPMENT SHALL NOT BE DRIVEN OVER ANY SIDEWALK WITHOUT AN EVALUATION BY AN ILLINOIS LICENSED STRUCTURAL ENGINEER.
7. BEFORE CONSTRUCTION COMMENCES, A PROFESSIONAL SURVEYOR MUST CHECK AND RECORD THE ELEVATION AND LOCATION OF EACH CTA COLUMN, ADJACENT BUILDINGS, AND BUILDING FOUNDATIONS BETWEEN STATION 14+18 AND STATION 21+90 ALONG LAKE STREET. THE SURVEYOR MUST CHECK THE COLUMNS, BUILDINGS, BUILDING FOUNDATIONS, AND UNCOVERED UNDERGROUND UTILITIES THROUGHOUT CONSTRUCTION FOR SETTLEMENT AND DEFLECTION CAUSED BY CONSTRUCTION OPERATIONS, AS DIRECTED BY THE COMMISSIONER. THIS SURVEY SHALL SUPERSEDE ANY SURVEY DOCUMENTATION PROVIDED BY THE COMMISSIONER.
8. AT A MINIMUM, COLUMNS WITHIN 25 FT OF TRENCHING OR EXCAVATION OPERATIONS MUST BE SURVEYED FOR MOVEMENT DAILY WHILE TRENCHES OR AREAS OF EXCAVATION ARE OPEN, WEEKLY THROUGHOUT CONSTRUCTION, AND AT THE CONCLUSION OF CONSTRUCTION UNTIL IT IS DETERMINED THAT NO MOVEMENT IS OCCURRING. BUILDINGS AND BUILDING FOUNDATIONS WITHIN 25 FT OF TRENCHING OR EXCAVATION OPERATIONS MUST BE SURVEYED FOR MOVEMENT DAILY WHILE TRENCHES OR AREAS OF EXCAVATION ARE OPEN. ONCE TRENCHING OR EXCAVATION WITHIN 25FT OF A BUILDING OR BUILDING FOUNDATION IS BACKFILLED, BUILDINGS AND BUILDING FOUNDATIONS MUST BE SURVEYED AT LEAST WEEKLY FOR AT LEAST TWO WEEKS OR UNTIL IT IS DETERMINED THAT NO MOVEMENT IS OCCURRING. A FINAL SURVEY OF ALL BUILDINGS AND BUILDINGS FOUNDATIONS MUST BE CONDUCTED AT THE CONCLUSION OF CONSTRUCTION. IF ANY UTILITIES ARE UNCOVERED WITHIN AN AREA OF EXCAVATION, THE SURVEYOR MUST CHECK AND RECORD THEIR LOCATION AND ELEVATION. THE LOCATION AND ELEVATION OF THE UTILITY MUST BE CHECKED DAILY WHILE EXPOSED. FURTHERMORE, THE COMMISSIONER MAY DIRECT THE SURVEYOR TO CHECK ADDITIONAL COLUMNS, BUILDINGS, BUILDING FOUNDATIONS, OR UTILITIES IN AREAS OF CONCERN WITHIN THE PROJECT LIMITS AT ANY TIME. ANY SETTLEMENT OR DEFLECTION OF ANY STRUCTURE, COLUMN, BUILDING FOUNDATION, TEMPORARY SHORING, OR UTILITY MUST BE IMMEDIATELY BROUGHT TO THE ATTENTION OF THE COMMISSIONER, AND ALL WORK IN THE AREA MUST CEASE UNTIL A PLAN IS APPROVED BY THE COMMISSIONER ADDRESSING THE ISSUE. THIS WORK WILL BE PAID SEPARATELY, BUT WILL BE CONSIDERED INCLUDED IN THE COST OF THE CONTRACT.
9. TEMPORARY SHEETING WILL BE USED DURING UTILITY AND FOUNDATION WORK AS NECESSARY TO ENSURE THE SAFETY OF WORKERS, THE PUBLIC, AND THE STABILITY OF THE EXCAVATION.
10. THE CONTRACTOR IS RESPONSIBLE FOR MONITORING ADJACENT BUILDINGS AND THE CTA STRUCTURE FOR DAMAGE AND MOVEMENT THROUGHOUT CONSTRUCTION IN ACCORDANCE WITH THE CTA ADJACENT CONSTRUCTION MANUAL.
11. THE SHORING SHEETS PRIMARILY DEAL WITH TRACK STRUCTURE SHORING AND DO NOT COVER ALL THE SHORING THE CONTRACTOR WILL NEED TO PROVIDE. ADDITIONAL SHORING WILL BE REQUIRED FOR VAULT CONSTRUCTION AND UTILITIES AND POSSIBLY FOR STATION CONSTRUCTION.
12. THE TEMPORARY SHORING IS DESIGNED AS A PERMANENT STRUCTURE PER AREMA.
13. THE TEMPORARY SHORING MUST CARRY THE FULL SPEED TRANSIT LOAD.
14. WHEN NOT PROTECTED BY AN IDOT STANDARD F SHAPE BARRIER, THE TEMPORARY SHORING MUST BE CAPABLE OF WITHSTANDING VEHICLE COLLISION FORCE AS SPECIFIED IN THE CTA INFRASTRUCTURE DESIGN CRITERIA MANUAL.
15. JACKS SHALL HAVE A RATED CAPACITY AT LEAST 50% GREATER THAN THE COMPUTED REQUIRED JACKING FORCE.
16. RAPID TRANSIT LIVE LOADS SHALL NOT BE SUPPORTED HYDRAULICALLY.
17. BENTS ADJACENT TO ONE ANOTHER MAY NOT BE SUPPORTED BY TEMPORARY SHORING AT THE SAME TIME.
18. WHERE TEMPORARY REINFORCEMENT, JACKS, STUBS, SHIMS, OR OTHER MODIFICATIONS CONNECT TO THE EXISTING TRACK STRUCTURE, THEY SHALL ACCOMMODATE BOLT HOLE SPACING THAT MATCHES TO THE EXISTING RIVET LOCATIONS TO MINIMIZE THE NEED TO DRILL THROUGH THE EXISTING STRUCTURE. THESE RIVETS SHOULD THEN BE REMOVED, AND BOLTS PUT IN PLACE TO MAKE THE NECESSARY CONNECTION.
19. DETERMINING THE ADEQUACY OF THE EXISTING STRUCTURE TO RESIST JACKING FORCES, CONSTRUCTION CONDITIONS, AND ANY OTHER LOADS WHILE IN A STATE DIFFERENT THAN THAT OF THE STRUCTURE PRIOR TO ANY CONSTRUCTION WORK, SHALL BE THE RESPONSIBILITY OF THE CONTRACTOR, AND SHALL BE EVALUATED BY AN ILLINOIS LICENSED STRUCTURAL ENGINEER.
20. DETERMINING THE ADEQUACY OF THE PROPOSED STRUCTURE TO RESIST JACKING FORCES, CONSTRUCTION CONDITIONS, AND ANY OTHER LOADS WHILE IN A STATE DIFFERENT THAN THAT OF THE STRUCTURE AS SHOWN ON THE FINAL PLANS, SHALL BE THE RESPONSIBILITY OF THE CONTRACTOR, AND SHALL BE EVALUATED BY AN ILLINOIS LICENSED STRUCTURAL ENGINEER.
21. ANY MODIFICATIONS TO THE PROPOSED STRUCTURE AS SHOWN ON THE FINALS PLANS TO FACILITATE CONSTRUCTION, MUST BE APPROVED BY THE COMMISSIONER, EVALUATED BY, AND SEALED BY A LICENSED STRUCTURAL ENGINEER IN THE STATE OF ILLINOIS PRIOR TO THE START OF CONSTRUCTION. THIS WORK WILL BE CONSIDERED AS INCLUDED IN THE COST OF THE CONTRACT.

DESIGN LOADS & PROPERTIES

1. STRUCTURAL STEEL AND STEEL CONNECTIONS FOR THE TEMPORARY SHORING SHALL HAVE THE SAME PROPERTIES AS THE TRACK SUPPORTING STRUCTURE UNO. SEE SHEETS S-001 THRU S-003.
2. TIMBER SHALL BE SOUTHERN PINE DENSE SELECT STRUCTURAL, DOUGLAS FIR SELECT STRUCTURAL, OR BETTER. MIN. BENDING CAPACITY Fb = 1500 PSI. MIN. SHEAR CAPACITY Fv = 165 PSI.
3. ALLOWABLE BEARING IS 2500 PSF.
4. HYDRAULIC JACKS SHALL BE PANCAKE TYPE AND HAVE MINIMUM CAPACITIES OF 250 TONS PER JACK WHEN TWO JACKS ARE USED TO LIFT UNDER BENT GIRDER. WHEN EIGHT JACKS ARE USED TO LIFT UNDER STRINGERS, THE JACKS SHALL HAVE A MINIMUM CAPACITIES OF 100 TONS PER JACK.
5. DESIGN LOADS ARE PER JACK, STUB, AND/OR SHIM IN EACH STAGE, UNO. STAGE 1 HAS TWO LOAD POINTS AND STAGE 2 HAS EIGHT LOAD POINTS, BOTH OF WHICH ARE DENOTED ON THE PLANS. THESE LOADS DO NOT INCLUDE ANY PLATFORM LOADS AND ARE TABULATED FOR WHEN THE PLATFORM AND CANOPY FRAMING HAS BEEN REMOVED FROM THE EXISTING STRUCTURE.

a. STAGE 1 LOADS

i.	DEAD LOAD	63 KIPS
ii.	LIVE LOAD	204 KIPS
iii.	IMPACT	96 KIPS
iv.	LATERAL WIND	28 KIPS
v.	LONGITUDINAL WIND	17 KIPS
vi.	WIND	0 KIPS
vii.	LONGITUDINAL BRAKING	13 KIPS

b. STAGE 2 LOADS

i.	DEAD LOAD	18 KIPS
ii.	LIVE LOAD	66 KIPS
iii.	IMPACT	32 KIPS
iv.	LATERAL WIND	8 KIPS
v.	LONGITUDINAL WIND	5 KIPS
vi.	WIND	11 KIPS
vii.	LONGITUDINAL BRAKING	3.5 KIPS

c. VEHICLE COLLISION FORCE (OCCURS EITHER STAGE, APPLY TO TOWER POSTS PER CTA IDCM)

i.	COLLISION LOAD (ALONG LAKE ST.)	16 KIPS
ii.	COLLISION LOAD (ALONG STATE ST.)	228 KIPS

NOTICE OF EXISTING SHORING TOWERS AVAILABLE FOR RE-USE

1. THERE ARE THREE SHORING TOWERS FROM THE DAMEN STATION PROJECT (CONTRACT D-7-135) THAT ARE AVAILABLE TO THE CONTRACTOR FOR USE ON THIS PROJECT. SEE APPENDIX J OF THE SPECIFICATIONS FOR PHOTOS, DRAWINGS, AND MORE INFORMATION.
2. ACTIONS REQUIRED TO UTILIZE THE SHORING TOWERS SHALL BE THE RESPONSIBILITY OF THE CONTRACTOR AS OUTLINED IN APPENDIX J OF THE SPECIFICATIONS.
3. THE SHORING TOWERS AVAILABLE FOR RE-USE MAY NOT MATCH THE CONFIGURATIONS SHOWN THROUGHOUT SX-101 TO SX-306. IT IS THE RESPONSIBILITY OF THE CONTRACTOR TO PROPERLY SHORE THE STRUCTURE DURING CONSTRUCTION REGARDLESS OF WETHER THE AVAILABLE SHORING TOWERS ARE RE-USED, MODIFIED, INCORPORATED INTO NEW SHORING, OR WETHER NEW SHORING IS PROCURED.

TYPICAL CONSTRUCTION & SHORING SEQUENCE

1. BENTS WILL BE REPLACED SUCH THAT NO TWO ADJACENT BENTS ARE TEMPORARILY SHORED AT THE SAME TIME. SEE SHEET S-001 FOR FULL SUGGESTED SEQUENCE OF CONSTRUCTION.
2. REMOVE EXISTING PLATFORMS, FLOORS, AND STATION FRAMING AS DENOTED IN THE DEMOLITION DRAWINGS, RETAIN FRAMING NEEDED FOR LATERAL STABILITY.
3. PERFORM REPAIRS TO EXISTING TRACK STRUCTURE AS DENOTED IN THE REPAIR DRAWINGS AS NECESSARY TO WITHSTAND TEMPORARY SHORING AND CONSTRUCTION CONDITIONS.
4. CREATE LEVEL SURFACES FOR THE TIMBER MATS AND TOWERS. SEE SUGGESTED SHORING ELEVATIONS.
5. CONSTRUCT TEMPORARY SHORING UNDER BENT.
6. WITH NO TRAIN IN ADJACENT SPANS, APPLY JACKING FORCES SUFFICIENT TO RELIEVE THE EXISTING COLUMNS OF GRAVITY LOAD (THESE FORCES TO BE CALCULATED BY THE CONTRACTOR AND SUBMITTED TO THE COMMISSIONER FOR APPROVAL), RECORD MOVEMENT, PLACE STUBS AND/OR SHIMS AS SHOWN IN CONFIGURATION 1 OF THE SUGGESTED SHORING PLANS, RELIEVE JACKS.
7. CUT AND REMOVE DENOTED PORTION OF BENT GIRDER AND COLUMNS. FOUNDATION REMOVAL MAY TAKE PLACE IF THE OPERATION WILL NOT COMPROMISE THE TEMPORARY SHORING STRUCTURE OR EXISTING TRACK STRUCTURE.
8. IF FOUNDATION REMOVAL CANNOT TAKE PLACE AS DENOTED IN THE DEMOLITION PLANS, IT IS SUGGESTED TO CORE THROUGH EXISTING FOUNDATIONS TO FACILITATE INSTALLATION OF PROPOSED DRILLED SHAFTS.
9. WITH NO TRAIN IN ADJACENT SPANS, MANIPULATE JACKS, STUBS, AND/OR SHIM PACKS TO ADJUST TOP OF RAIL ELEVATIONS. FOR PROPOSED RAIL PROFILE AND DETAILS, SEE CT SHEETS.
10. INSTALL NEW FOUNDATIONS AND ALLOW FULL 28 DAY CONCRETE CURE.
11. WITH NO TRAIN IN ADJACENT SPANS, APPLY JACKING FORCES TO RELIEVE STUBS AND/OR SHIM PACKS OF GRAVITY LOAD. REMOVE CONFIGURATION 1 STUBS AND/OR SHIMS AND PLACE STUBS AND/OR SHIMS AS SHOWN IN CONFIGURATION 2 OF THE SUGGESTED SHORING PLANS, RELIEVE JACKS.
12. REMOVE RIVETS AND REMOVE REMAINING PORTION OF EXISTING BENT GIRDER.
13. INSTALL LATERAL SLIDE SYSTEM, SKID TRACK, AND OTHER SHORING SYSTEMS NECESSARY TO FACILITATE SLIDE-IN OF NEW PROPOSED BENT GIRDER SECTION.
14. LIFT AND SET MIDDLE PROPOSED BENT GIRDER SECTION ONTO SLIDE SYSTEM AND SECURE AS REQUIRED FOR SLIDE-IN OPERATION.
15. PERFORM SLIDE OPERATION TO INSTALL NEW BENT GIRDER SECTION. CHECK ALIGNMENT OF PROPOSED BENT GIRDER SECTION FOLLOWING EACH STROKE OF JACK TO ENSURE NO DAMAGE TO THE EXISTING STRUCTURE.
16. ONCE THE PROPOSED BENT GIRDER SECTION IS IN THE FINAL POSITION, INSTALL NEW CONNECTIONS TO AFFIX THE PROPOSED SECTION TO THE EXISTING TRACK STRINGERS.
17. REMOVE LATERAL SLIDE SYSTEM AND SKID TRACK FROM TEMPORARY SHORING.
18. WITH NO TRAIN IN ADJACENT SPANS, APPLY JACKING FORCES TO RELIEVE STUBS AND/OR SHIM PACKS OF GRAVITY LOAD. REMOVE CONFIGURATION 2 STUBS AND/OR SHIMS AND PLACE STUBS AND/OR SHIMS AS SHOWN IN CONFIGURATION 1 OF THE SUGGESTED SHORING PLANS, MODIFYING STUBS/SHIMS AS REQUIRED TO SUPPORT THE PROPOSED BENT GIRDER SECTION, RELIEVE JACKS.
19. INSTALL PROPOSED BENT COLUMNS, REMAINING PROPOSED BENT GIRDER SECTIONS, AND CONNECTING ELEMENTS.
20. WITH NO TRAIN IN ADJACENT SPANS, APPLY JACKING FORCES TO RELIEVE STUBS AND/OR SHIM PACKS OF GRAVITY LOAD. REMOVE STUBS AND/OR SHIMS. LOWER JACKS TO TRANSFER LOAD TO COLUMNS AND FOUNDATIONS.
21. REMOVE TEMPORARY SHORING SYSTEM.

DESIGN BY:	CMG									
DRAWN BY:	CMG									
CHECKED BY:	MDS									
APPROVED BY:	MDS	4	7/3/2023	ISSUED FOR BID						
CDOT/APPROVED BY:		NO.	DATE	REVISIONS	DES.	DRW.	CHK.	DCCO	CDOT	

TRANSYSTEMS
222 SOUTH RIVERSIDE PLAZA SUITE 610
CHICAGO, ILLINOIS 60606

SKIDMORE, OWINGS & MERRILL LLP
224 SOUTH MICHIGAN AVENUE, SUITE 1000
CHICAGO, ILLINOIS 60604

CHICAGO DEPARTMENT OF TRANSPORTATION
DIVISION OF ENGINEERING

STATE / LAKE LOOP ELEVATED STATION
200 NORTH STATE STREET, CHICAGO, IL 60601

SUGGESTED SHORING NOTES

CDOT PROJECT D-1-209

DATE: 7/3/2023

SPEC. NO.

DRAWING NO. SX-001

REVISION NO.

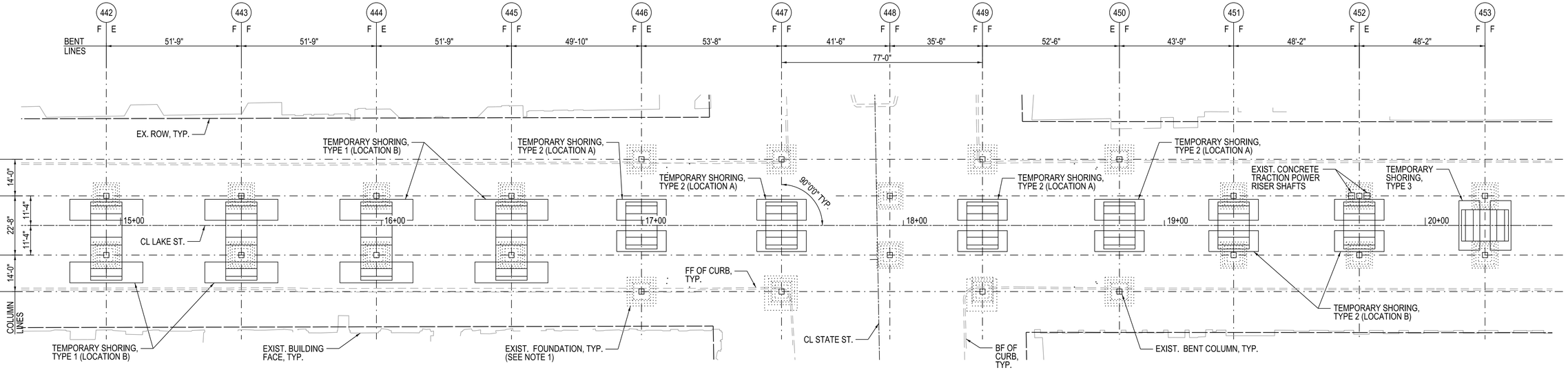

1 SUGGESTED SHORING PLAN

1" = 20'-0"

NOTES:

1. FOR REMOVAL OF EXISTING FOUNDATIONS, SEE SHEET SD-101
2. EXIST. UTILITIES NOT SHOWN FOR CLARITY. SEE CIVIL PLANS.
3. VAULTED SIDEWALK FOUNDATIONS NOT SHOWN FOR CLARITY. SEE VAULTED SIDEWALK DEMOLITION PLANS.
4. DIMENSIONS INDICATED FOR EXISTING STRUCTURE ARE TO BE VERIFIED IN FIELD.
5. SEE CIVIL SHEETS FOR MAINTENANCE OF TRAFFIC PLANS.

DESIGN BY:	CMG								
DRAWN BY:	CMG	4	7/3/2023	ISSUED FOR BID					
CHECKED BY:	MDS	1	11/4/2022	PERMIT REVISION #1					
APPROVED BY:	MDS	0	9/9/2022	ISSUED FOR PERMIT					
CDOT/APPROVED BY:		NO.	DATE	REVISIONS	DES.	DRW.	CHK.	DCCO	CDOT

TRANSYSTEMS
222 SOUTH RIVERSIDE PLAZA SUITE 610
CHICAGO, ILLINOIS 60606

SKIDMORE, OWINGS & MERRILL LLP
224 SOUTH MICHIGAN AVENUE, SUITE 1000
CHICAGO, ILLINOIS 60604

CHICAGO DEPARTMENT OF TRANSPORTATION
DIVISION OF ENGINEERING

STATE / LAKE LOOP ELEVATED STATION
200 NORTH STATE STREET, CHICAGO, IL 60601

SUGGESTED SHORING PLAN

CDOT PROJECT D-1-209 | DATE: 9/9/2022

SPEC. NO.

DRAWING NO. SX-101

REVISION NO.

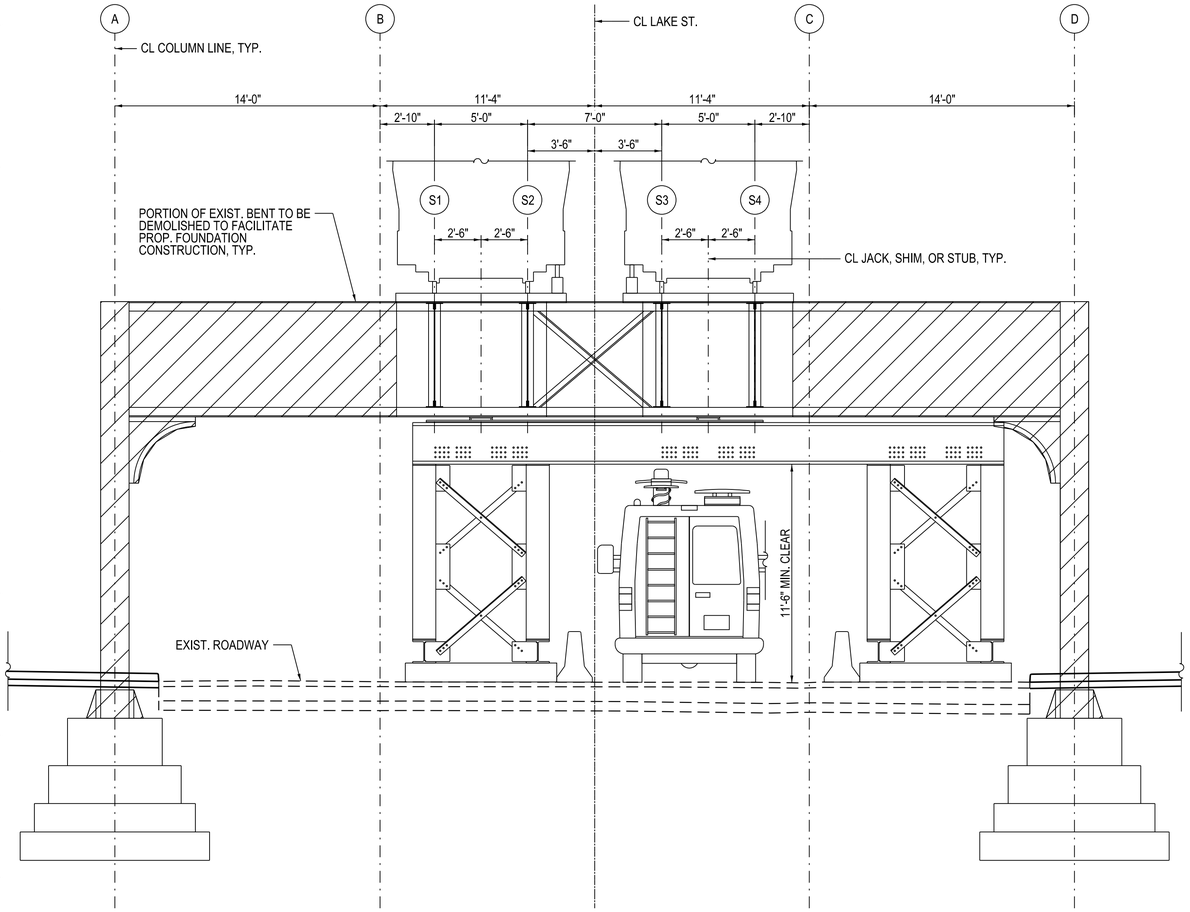

1 ELEVATION VIEW - SHORING TYPE 1 (LOCATION A)

1/4" = 1'-0" (LOOKING EAST, 0 LOCATIONS)

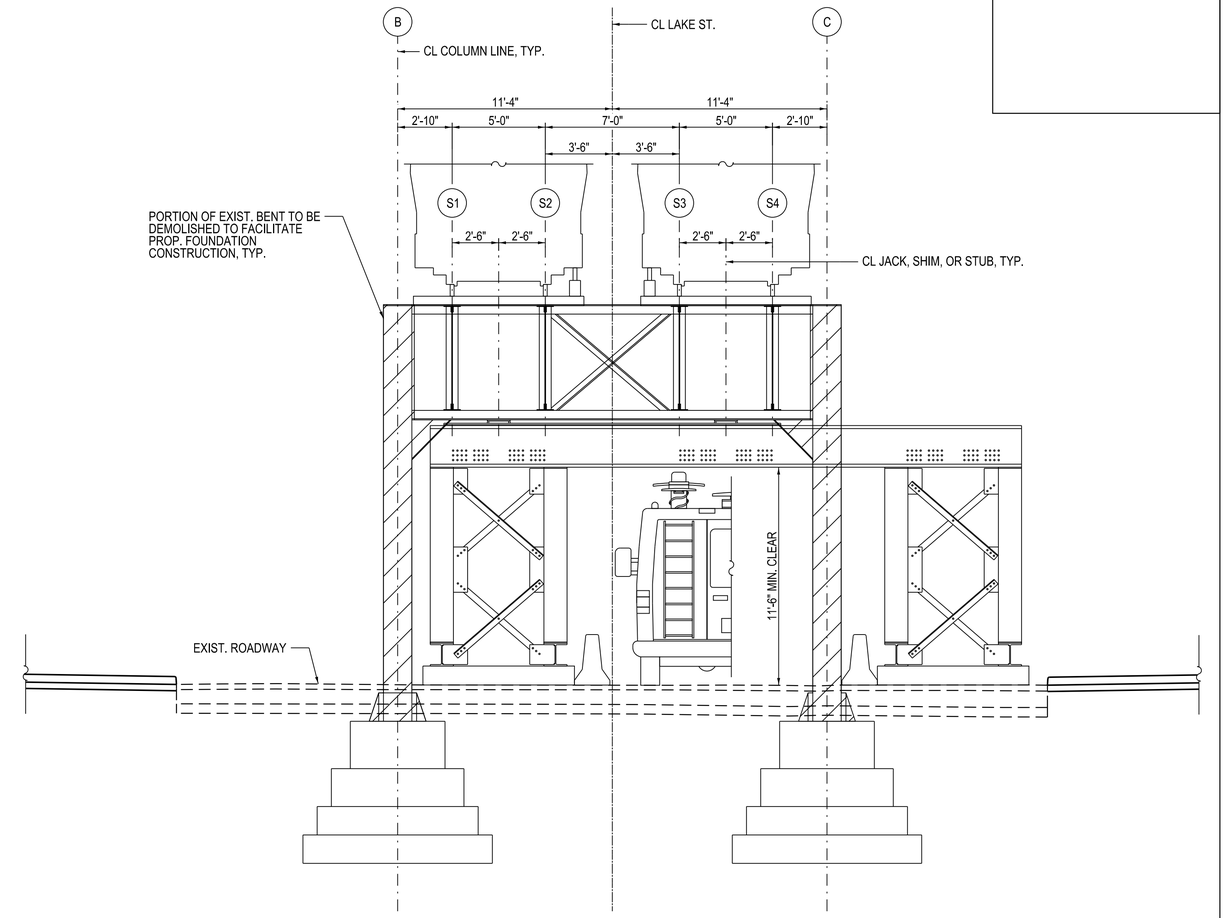

2 ELEVATION VIEW - SHORING TYPE 1 (LOCATION B)

1/4" = 1'-0" (LOOKING EAST, 4 LOCATIONS)

NOTES:

1. FOR TEMPORARY SHORING LOCATIONS, SEE SX-101
2. SEE CIVIL SHEETS FOR MAINTENANCE OF TRAFFIC PLANS.
3. DIMENSIONS INDICATED FOR EXISTING STRUCTURE ARE TO BE VERIFIED IN THE FIELD.

DESIGN BY:	CMG								
DRAWN BY:	CMG	4	7/3/2023	ISSUED FOR BID					
CHECKED BY:	WJC	1	11/4/2022	PERMIT REVISION #1					
APPROVED BY:	WJC	0	9/9/2022	ISSUED FOR PERMIT					
CDOT/APPROVED BY:		NO.	DATE	REVISIONS	DES.	DRW.	CHK.	DCCO	CDOT

TRANSYSTEMS
222 SOUTH RIVERSIDE PLAZA SUITE 610
CHICAGO, ILLINOIS 60606

SKIDMORE, OWINGS & MERRILL LLP
224 SOUTH MICHIGAN AVENUE, SUITE 1000
CHICAGO, ILLINOIS 60604

CHICAGO DEPARTMENT OF TRANSPORTATION
DIVISION OF ENGINEERING

STATE / LAKE LOOP ELEVATED STATION
200 NORTH STATE STREET, CHICAGO, IL 60601

SUGGESTED SHORING - TYPE 1
STAGING DIAMGRAMS

CDOT PROJECT D-1-209 | DATE: 9/9/2022

SPEC. NO.

DRAWING NO.
SX-201

REVISION NO.

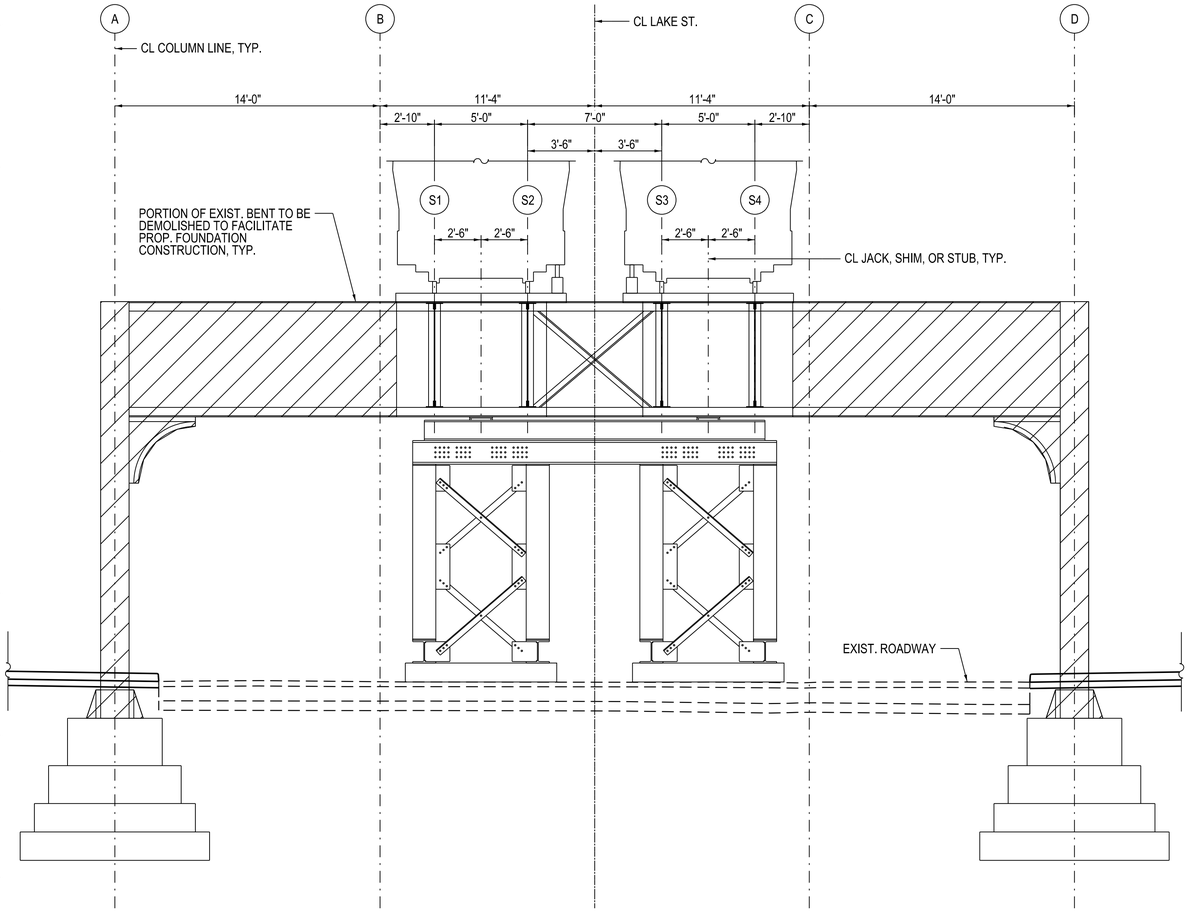

1 ELEVATION VIEW - SHORING TYPE 2 (LOCATION A)

1/4" = 1'-0" (LOOKING EAST , 4 LOCATIONS)

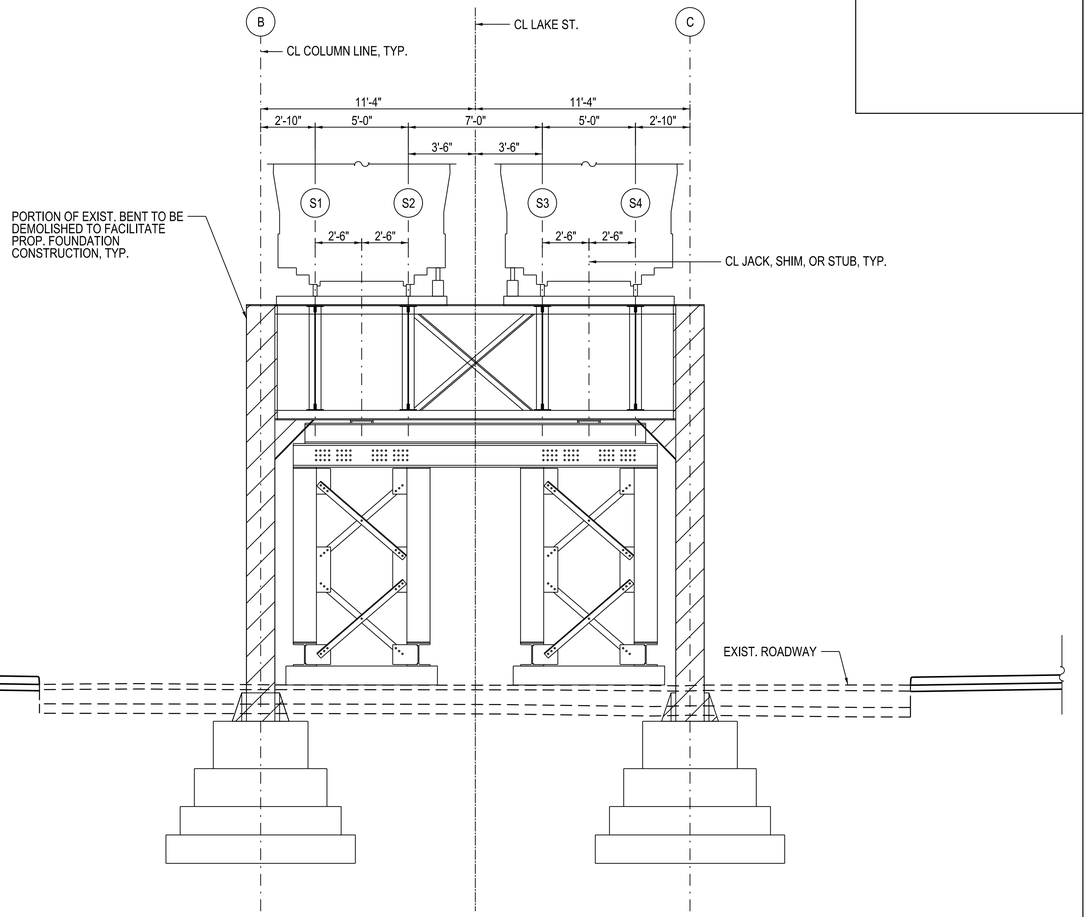

2 ELEVATION VIEW - SHORING TYPE 2 (LOCATION B)

1/4" = 1'-0" (LOOKING EAST, 2 LOCATIONS)

NOTES:

1. FOR TEMPORARY SHORING LOCATIONS, SEE SX-101
2. SEE CIVIL SHEETS FOR MAINTENANCE OF TRAFFIC PLANS.
3. DIMENSIONS INDICATED FOR EXISTING STRUCTURE ARE TO BE VERIFIED IN THE FIELD.

DESIGN BY:	CMG								
DRAWN BY:	CMG	4	7/3/2023	ISSUED FOR BID					
CHECKED BY:	WJC	1	11/4/2022	PERMIT REVISION #1					
APPROVED BY:	WJC	0	9/9/2022	ISSUED FOR PERMIT					
CDOT/APPROVED BY:		NO.	DATE	REVISIONS	DES.	DRW.	CHK.	DCCO	CDOT

TRANSYSTEMS
222 SOUTH RIVERSIDE PLAZA SUITE 610
CHICAGO, ILLINOIS 60606

SKIDMORE, OWINGS & MERRILL LLP
224 SOUTH MICHIGAN AVENUE, SUITE 1000
CHICAGO, ILLINOIS 60604

CHICAGO DEPARTMENT OF TRANSPORTATION
DIVISION OF ENGINEERING

STATE / LAKE LOOP ELEVATED STATION
200 NORTH STATE STREET, CHICAGO, IL 60601

SUGGESTED SHORING - TYPE 2
STAGING DIAGRAMS

CDOT PROJECT D-1-209

DATE: 9/9/2022

SPEC. NO.

DRAWING NO. SX-202

REVISION NO.

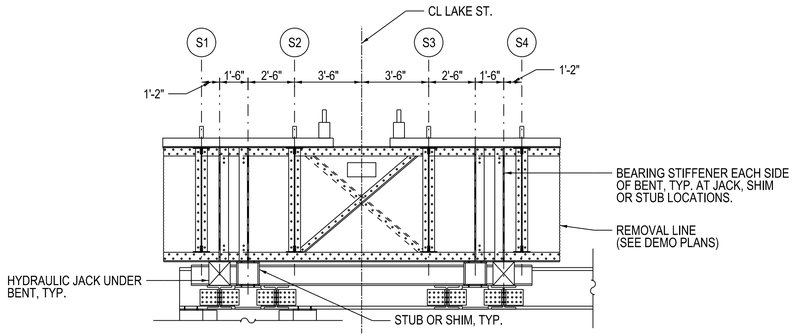

1 TYPE 1 SHORING JACK LOCATIONS

1/4" = 1'-0"

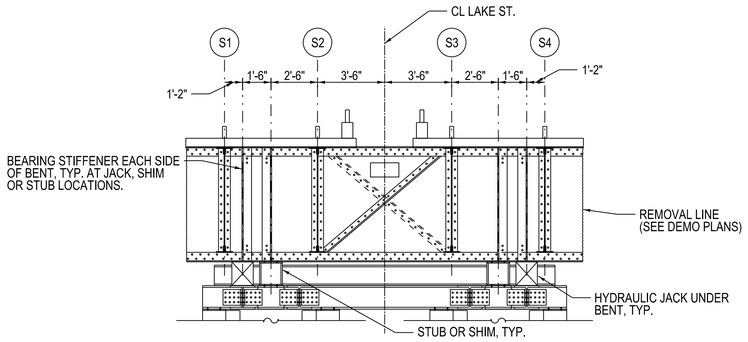

2 TYPE 2 SHORING JACK LOCATIONS

1/4" = 1'-0"

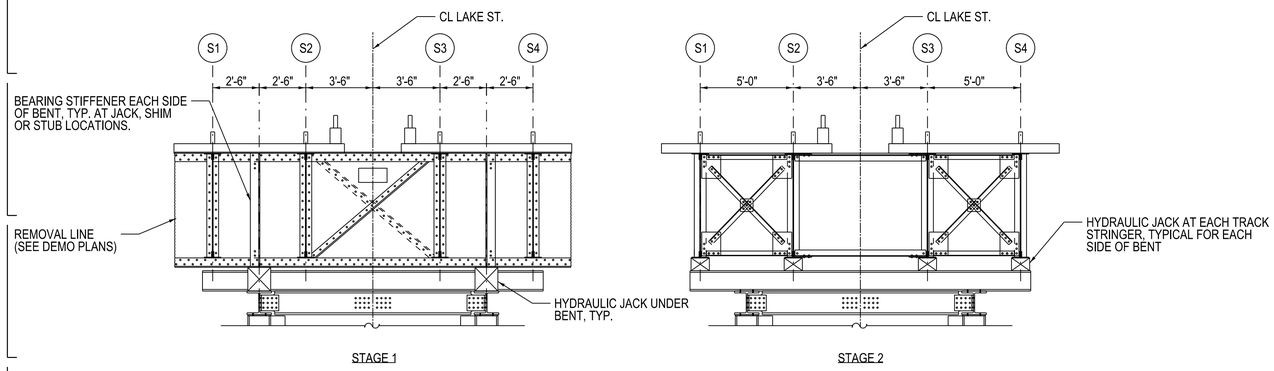

3 TYPE 3 SHORING JACK LOCATIONS - STAGE 1 & 2

1/4" = 1'-0"

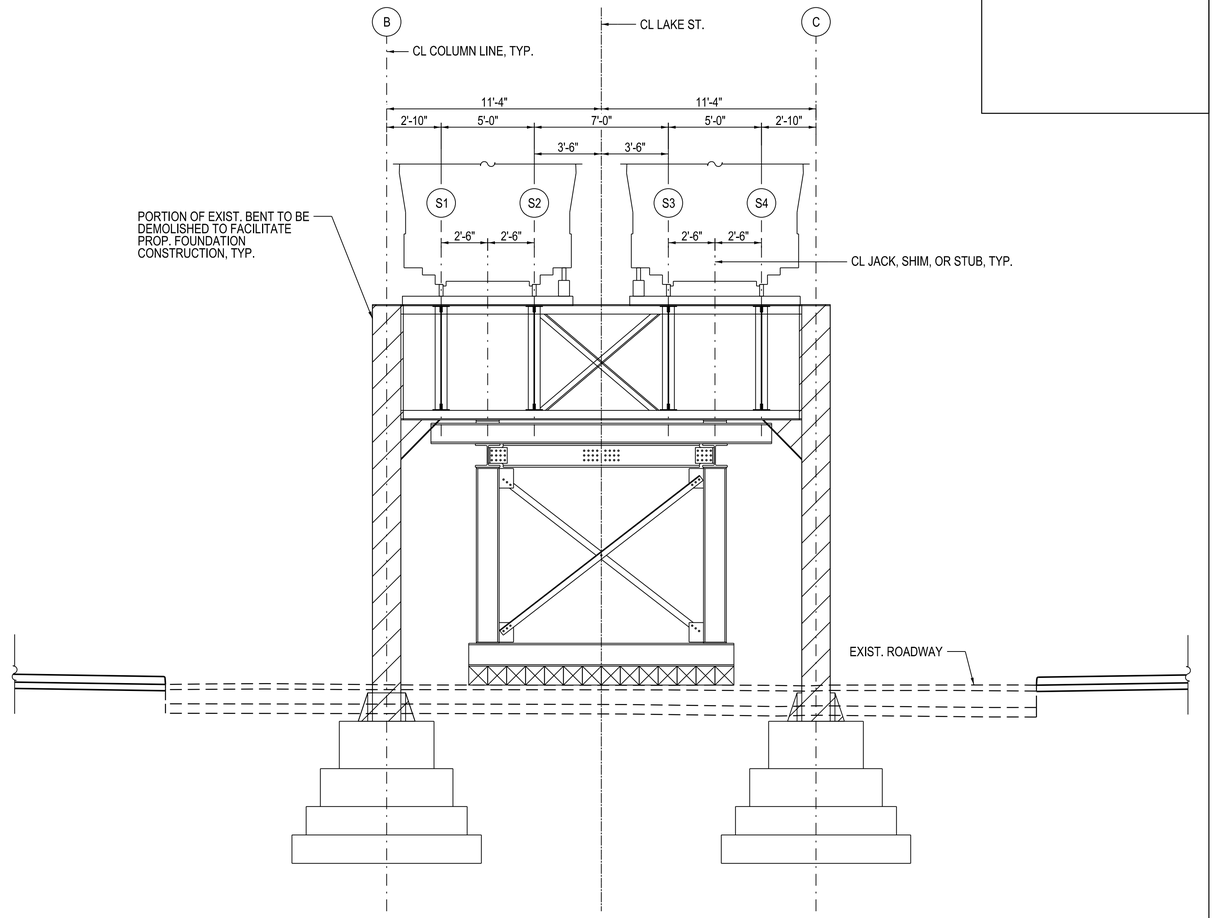

4 ELEVATION VIEW - SHORING TYPE 3

1/4" = 1'-0" (LOOKING EAST, 1 LOCATION)

NOTES:

1. FOR TEMPORARY SHORING LOCATIONS, SEE SX-101
2. SEE CIVIL SHEETS FOR MAINTENANCE OF TRAFFIC PLANS.
3. DIMENSIONS INDICATED FOR EXISTING STRUCTURE ARE TO BE VERIFIED IN THE FIELD.

DESIGN BY:	CMG								
DRAWN BY:	CMG	4	7/3/2023	ISSUED FOR BID					
CHECKED BY:	WJC	1	11/4/2022	PERMIT REVISION #1					
APPROVED BY:	WJC	0	9/9/2022	ISSUED FOR PERMIT					
CDOT/APPROVED BY:		NO.	DATE	REVISIONS	DES.	DRW.	CHK.	DCCO	CDOT

TRANSYSTEMS
222 SOUTH RIVERSIDE PLAZA SUITE 610
CHICAGO, ILLINOIS 60606

SKIDMORE, OWINGS & MERRILL LLP
224 SOUTH MICHIGAN AVENUE, SUITE 1000
CHICAGO, ILLINOIS 60604

CHICAGO DEPARTMENT OF TRANSPORTATION
DIVISION OF ENGINEERING

STATE / LAKE LOOP ELEVATED STATION
200 NORTH STATE STREET, CHICAGO, IL 60601

SUGGESTED SHORING - JACKING AND TYPE 3 STAGING DIAGRAMS

SPEC. NO.

DRAWING NO. SX-203

CDOT PROJECT D-1-209 | DATE: 9/9/2022 | REVISION NO.

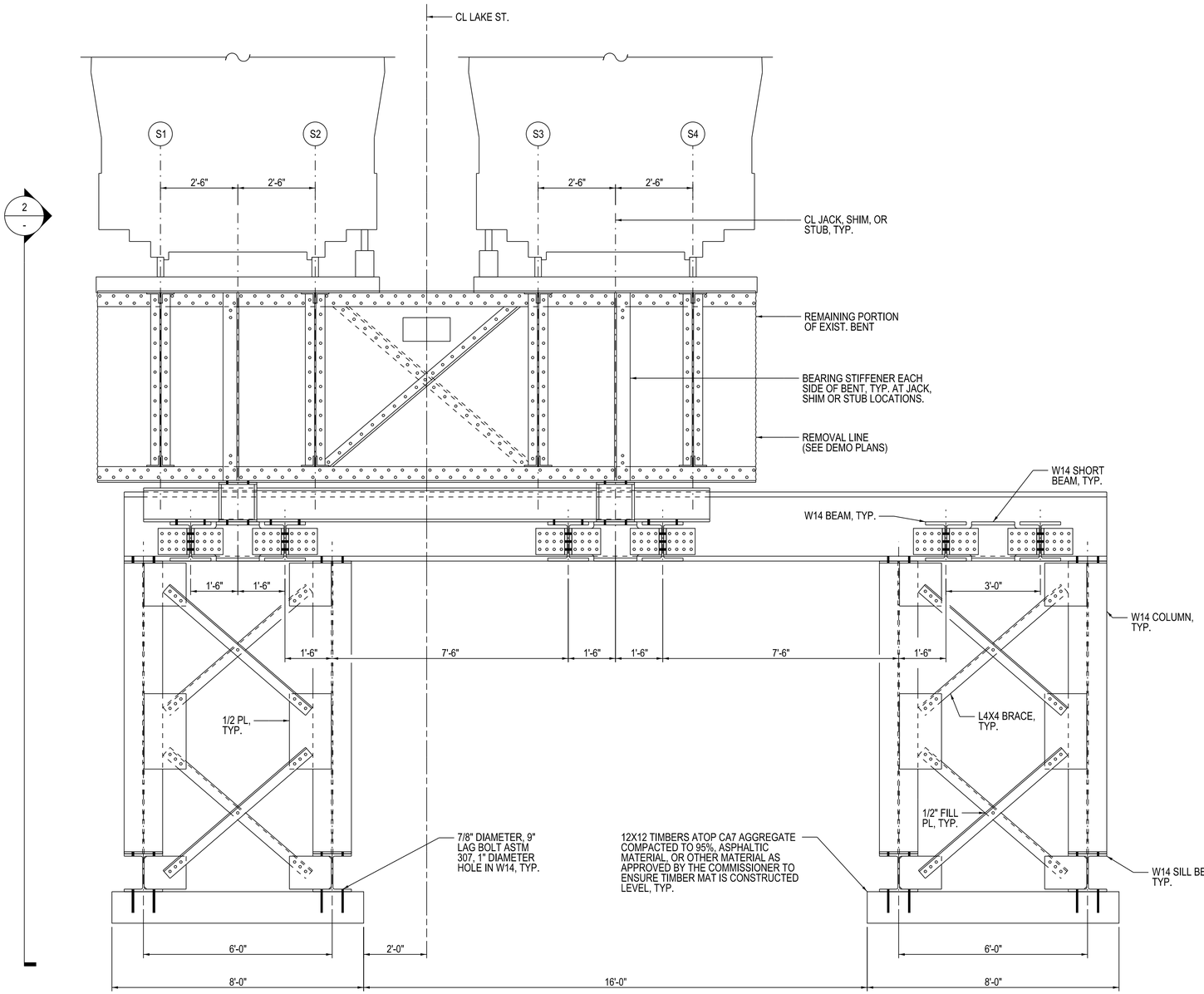

1 ELEVATION VIEW - SHORING TYPE 1 (STAGE 1)

1/2"=1'-0" (LOOKING EAST)

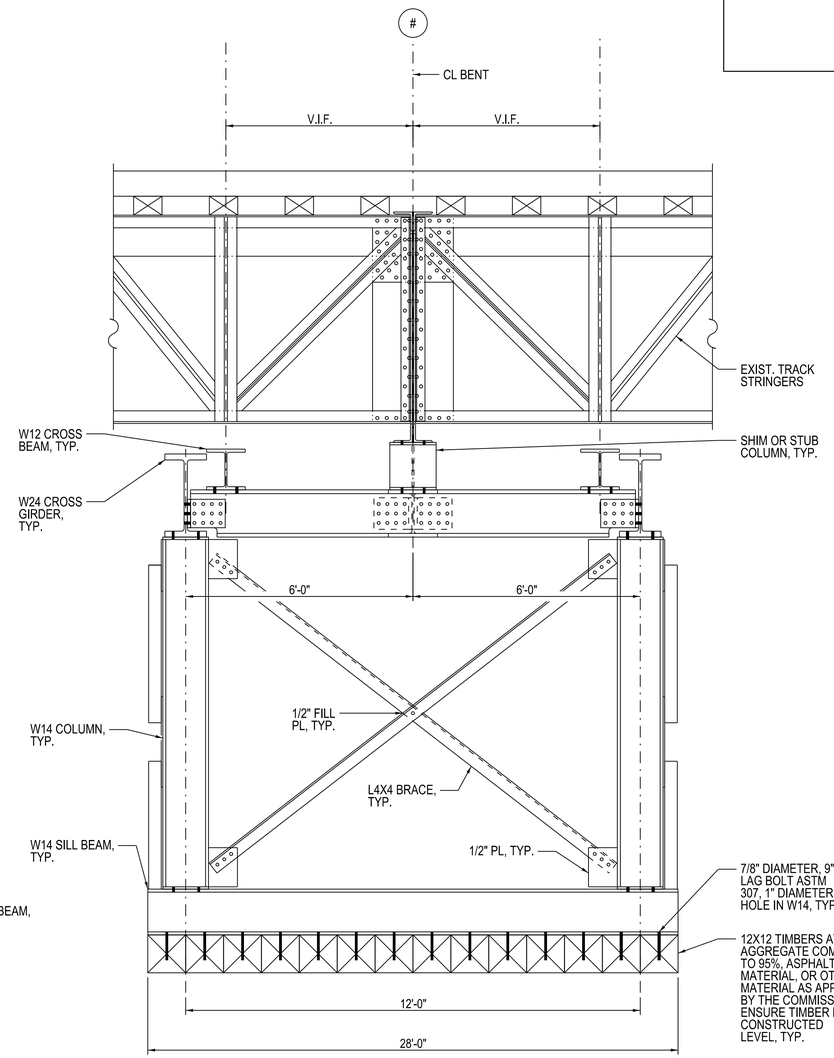

2 SECTION - SHORING TYPE 1 (STAGE 1)

1/2"=1'-0" (LOOKING SOUTH)

NOTES:

1. FOR TEMPORARY SHORING LOCATIONS, SEE SHEET SX-101
2. DIMENSIONS INDICATED FOR EXISTING STRUCTURE ARE TO BE VERIFIED IN THE FIELD.

DESIGN BY:	CMG								
DRAWN BY:	CMG	4	7/3/2023	ISSUED FOR BID					
CHECKED BY:	WJC	1	11/4/2022	PERMIT REVISION #1					
APPROVED BY:	WJC	0	9/9/2022	ISSUED FOR PERMIT					
CDOT/APPROVED BY:		NO.	DATE	REVISIONS	DES.	DRW.	CHK.	DCCO	CDOT

TRANSYSTEMS
222 SOUTH RIVERSIDE PLAZA SUITE 610
CHICAGO, ILLINOIS 60606

SKIDMORE, OWINGS & MERRILL LLP
224 SOUTH MICHIGAN AVENUE, SUITE 1000
CHICAGO, ILLINOIS 60604

CHICAGO DEPARTMENT OF TRANSPORTATION
DIVISION OF ENGINEERING

STATE / LAKE LOOP ELEVATED STATION
200 NORTH STATE STREET, CHICAGO, IL 60601

SUGGESTED SHORING - TYPE 1 (STAGE 1) DETAILS

CDOT PROJECT D-1-209 | DATE: 9/9/2022

SPEC. NO.

DRAWING NO. SX-301

REVISION NO.

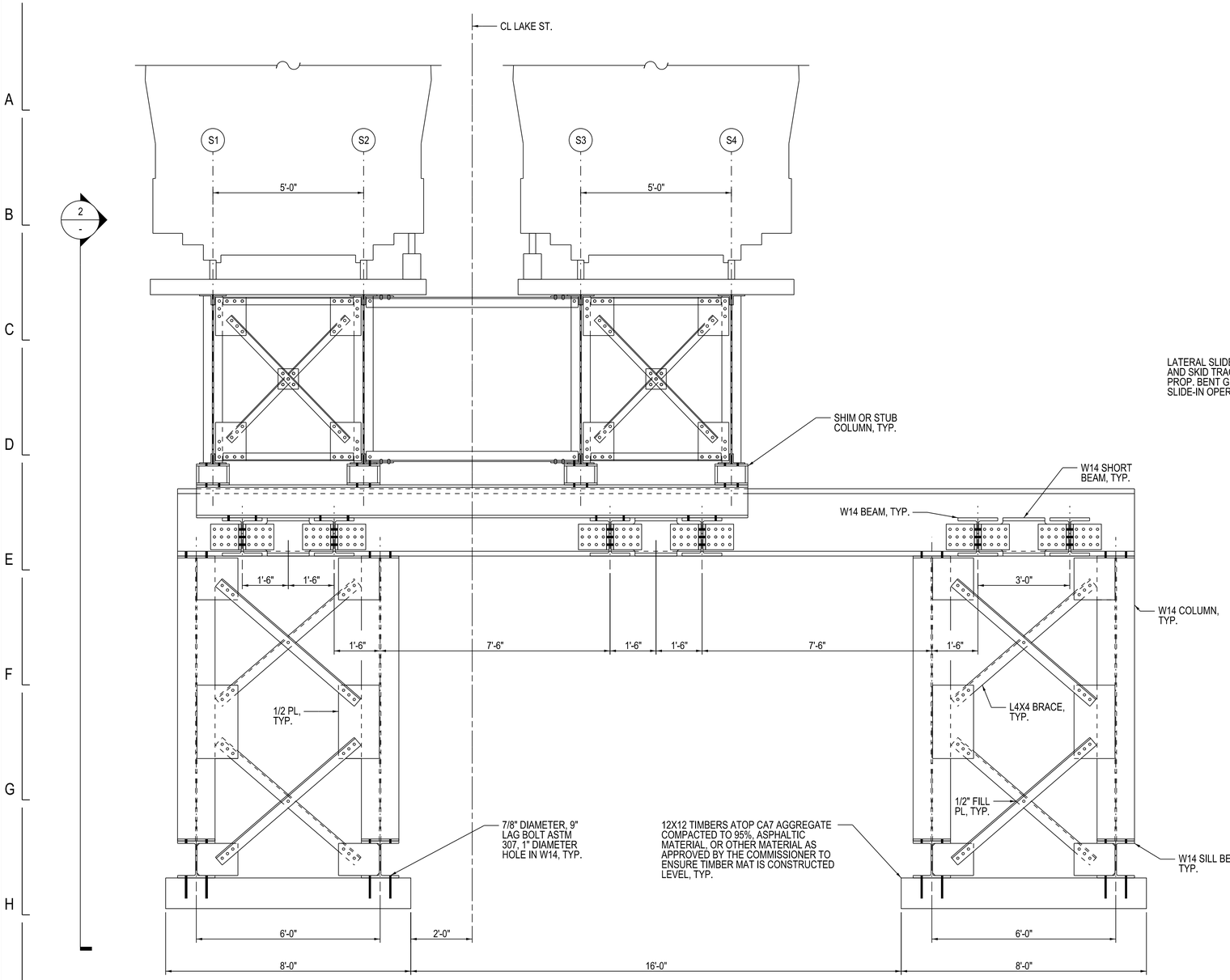

1 ELEVATION VIEW - SHORING TYPE 1 (STAGE 2)

1/2"=1'-0" (LOOKING EAST)

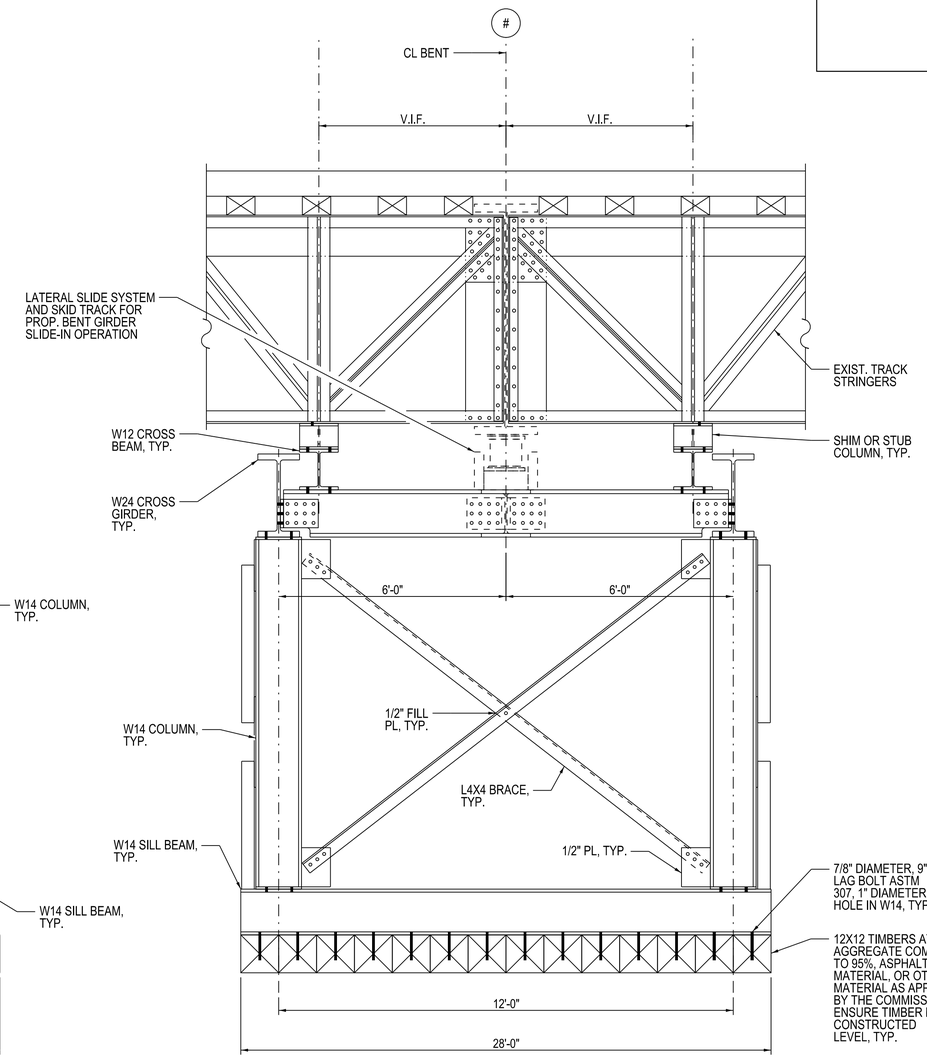

2 SECTION - SHORING TYPE 1 (STAGE 2)

1/2"=1'-0" (LOOKING SOUTH)

NOTES:

1. FOR TEMPORARY SHORING LOCATIONS, SEE SHEET SX-101
2. DIMENSIONS INDICATED FOR EXISTING STRUCTURE ARE TO BE VERIFIED IN THE FIELD.

DESIGN BY:	CMG								
DRAWN BY:	CMG	4	7/3/2023	ISSUED FOR BID					
CHECKED BY:	WJC	1	11/4/2022	PERMIT REVISION #1					
APPROVED BY:	WJC	0	9/9/2022	ISSUED FOR PERMIT					
CDOT/APPROVED BY:		NO.	DATE	REVISIONS	DES.	DRW.	CHK.	DCCO	CDOT

TRANSYSTEMS
222 SOUTH RIVERSIDE PLAZA SUITE 610
CHICAGO, ILLINOIS 60606

SKIDMORE, OWINGS & MERRILL LLP
224 SOUTH MICHIGAN AVENUE, SUITE 1000
CHICAGO, ILLINOIS 60604

CHICAGO DEPARTMENT OF TRANSPORTATION
DIVISION OF ENGINEERING

STATE / LAKE LOOP ELEVATED STATION
200 NORTH STATE STREET, CHICAGO, IL 60601

SUGGESTED SHORING - TYPE 1 (STAGE 2) DETAILS

CDOT PROJECT D-1-209 | DATE: 9/9/2022

SPEC. NO.

DRAWING NO. SX-302

REVISION NO.

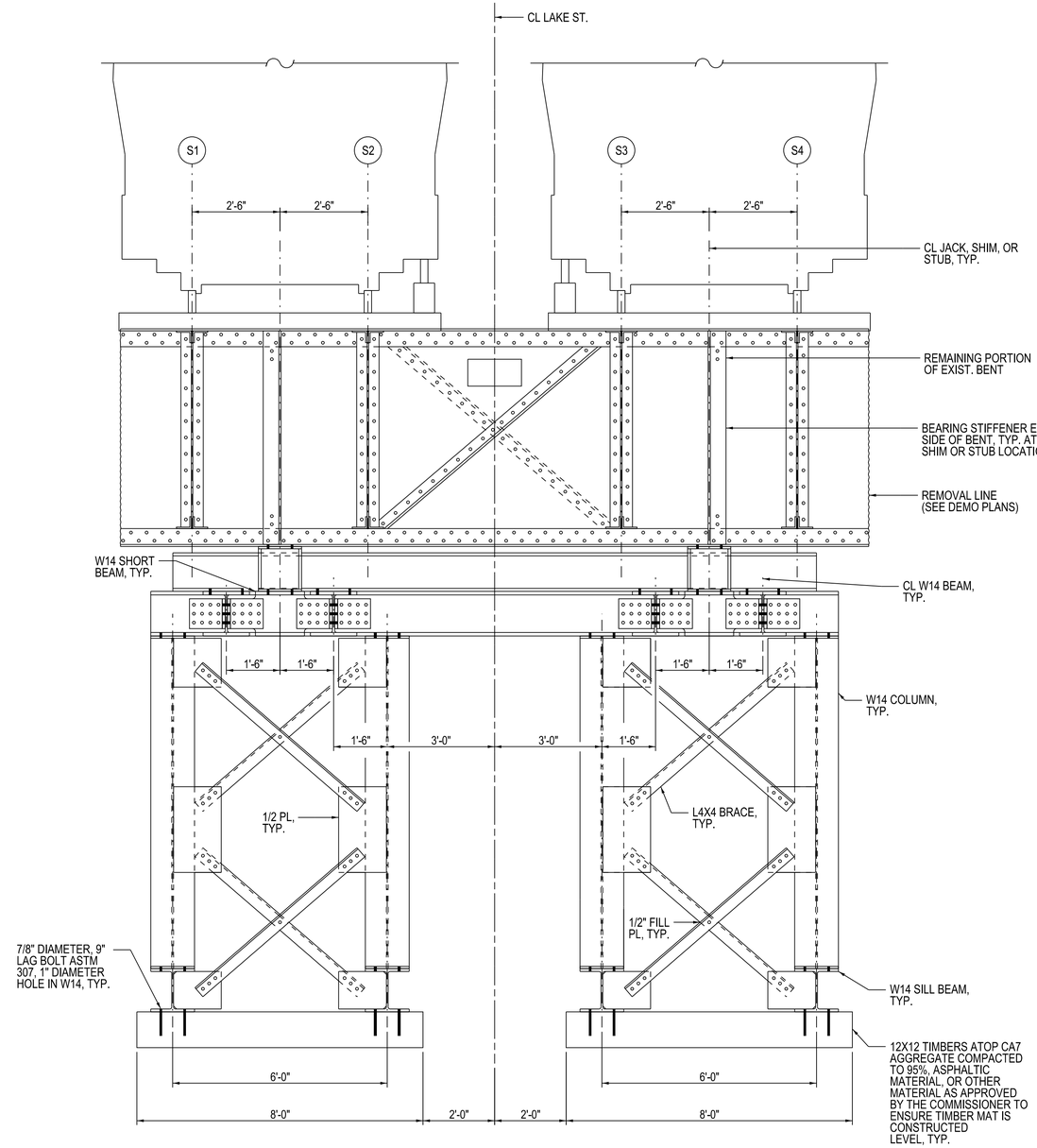

1 ELEVATION VIEW - SHORING TYPE 2 (STAGE 1)

1/2"=1'-0" (LOOKING EAST)

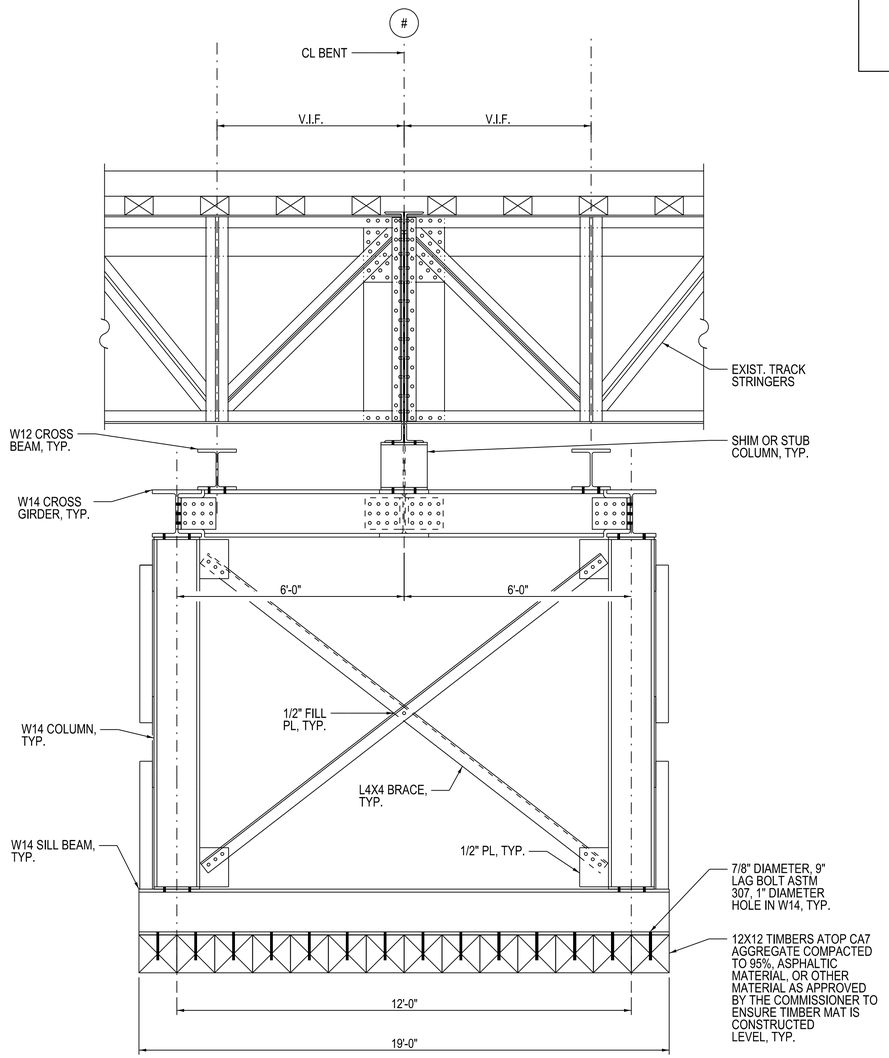

2 SECTION - SHORING TYPE 2 (STAGE 1)

1/2"=1'-0" (LOOKING SOUTH)

NOTES:

1. FOR TEMPORARY SHORING LOCATIONS, SEE SHEET SX-101
2. DIMENSIONS INDICATED FOR EXISTING STRUCTURE ARE TO BE VERIFIED IN THE FIELD.

DESIGN BY:	CMG								
DRAWN BY:	CMG	4	7/3/2023	ISSUED FOR BID					
CHECKED BY:	WJC	1	11/4/2022	PERMIT REVISION #1					
APPROVED BY:	WJC	0	9/9/2022	ISSUED FOR PERMIT					
CDOT/APPROVED BY:		NO.	DATE	REVISIONS	DES.	DRW.	CHK.	DCCO	CDOT

TRANSYSTEMS
222 SOUTH RIVERSIDE PLAZA SUITE 610
CHICAGO, ILLINOIS 60606

SKIDMORE, OWINGS & MERRILL LLP
224 SOUTH MICHIGAN AVENUE, SUITE 1000
CHICAGO, ILLINOIS 60604

CHICAGO DEPARTMENT OF TRANSPORTATION
DIVISION OF ENGINEERING

STATE / LAKE LOOP ELEVATED STATION
200 NORTH STATE STREET, CHICAGO, IL 60601

SUGGESTED SHORING - TYPE 2 (STAGE 1) DETAILS

CDOT PROJECT D-1-209 | DATE: 9/9/2022

SPEC. NO.

DRAWING NO. SX-303

REVISION NO.

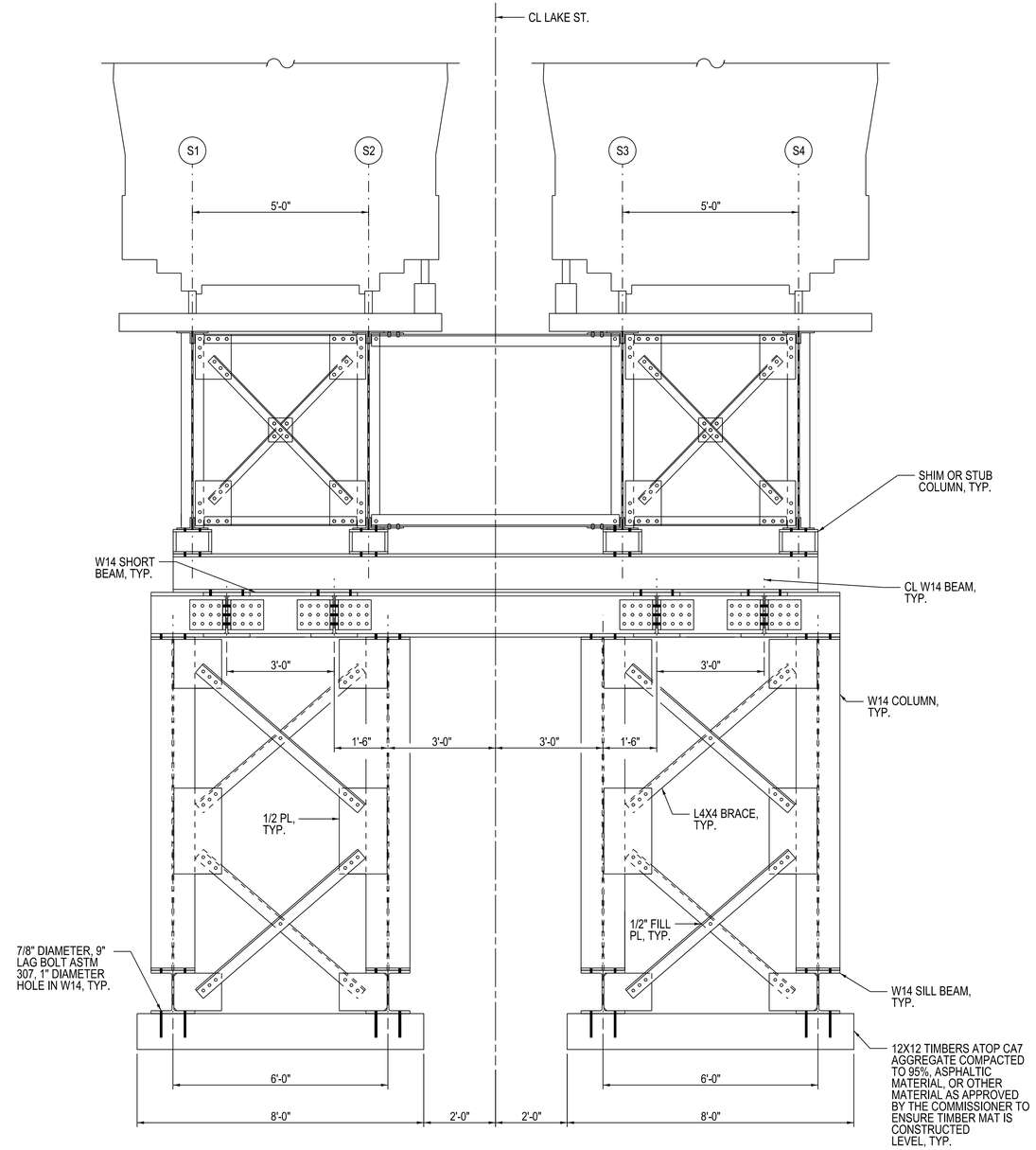

1 ELEVATION VIEW - SHORING TYPE 2 (STAGE 2)

1/2"=1'-0" (LOOKING EAST)

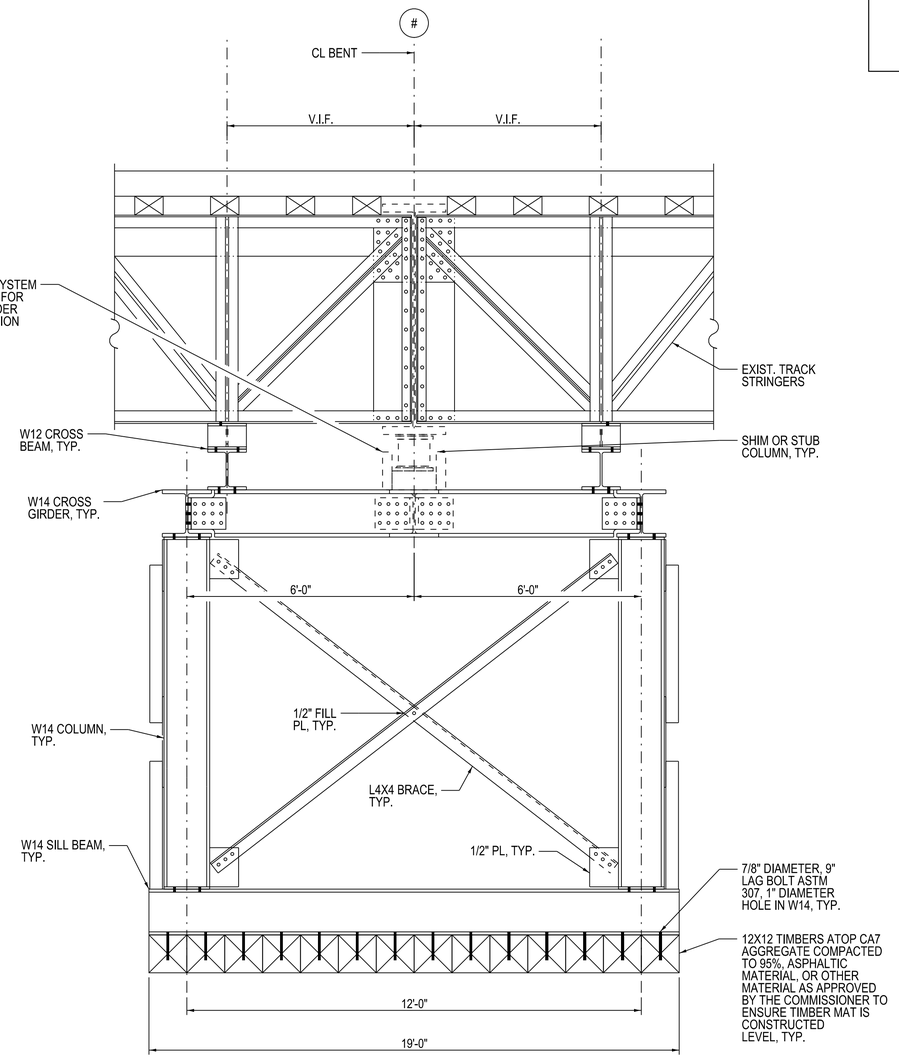

2 SECTION - SHORING TYPE 2 (STAGE 2)

1/2"=1'-0" (LOOKING SOUTH)

NOTES:

1. FOR TEMPORARY SHORING LOCATIONS, SEE SHEET SX-101
2. DIMENSIONS INDICATED FOR EXISTING STRUCTURE ARE TO BE VERIFIED IN THE FIELD.

DESIGN BY:	CMG								
DRAWN BY:	CMG	4	7/3/2023	ISSUED FOR BID					
CHECKED BY:	WJC	1	11/4/2022	PERMIT REVISION #1					
APPROVED BY:	WJC	0	9/9/2022	ISSUED FOR PERMIT					
CDOT/APPROVED BY:		NO.	DATE	REVISIONS	DES.	DRW.	CHK.	DCCO	CDOT

TRANSYSTEMS
222 SOUTH RIVERSIDE PLAZA SUITE 610
CHICAGO, ILLINOIS 60606

SKIDMORE, OWINGS & MERRILL LLP
224 SOUTH MICHIGAN AVENUE, SUITE 1000
CHICAGO, ILLINOIS 60604

CHICAGO DEPARTMENT OF TRANSPORTATION
DIVISION OF ENGINEERING

STATE / LAKE LOOP ELEVATED STATION
200 NORTH STATE STREET, CHICAGO, IL 60601

SUGGESTED SHORING - TYPE 2 (STAGE 2) DETAILS

CDOT PROJECT D-1-209 | DATE: 9/9/2022

SPEC. NO.

DRAWING NO. SX-304

REVISION NO.

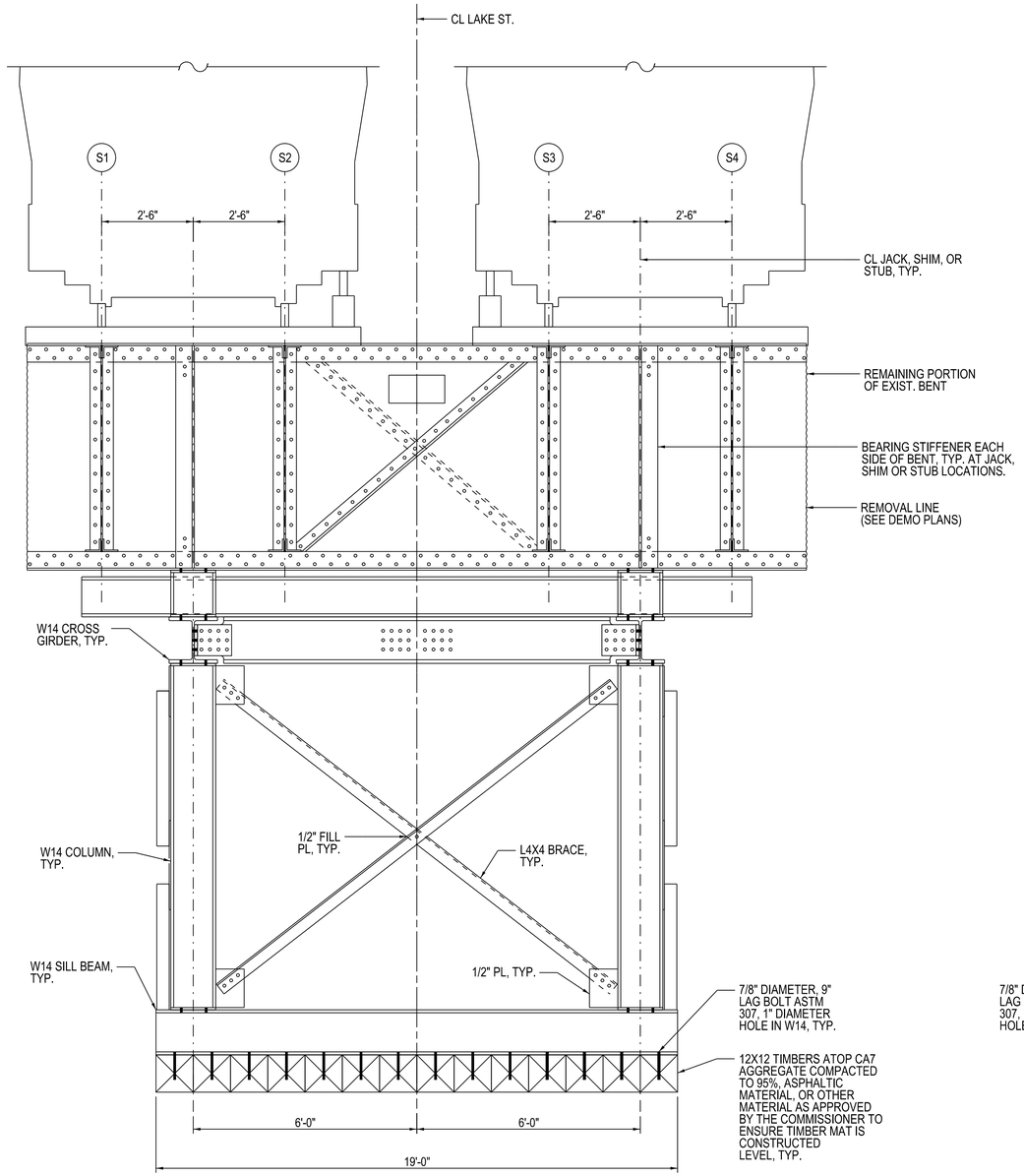

1 ELEVATION VIEW - SHORING TYPE 3 (STAGE 1)

1/2"=1'-0" (LOOKING EAST)

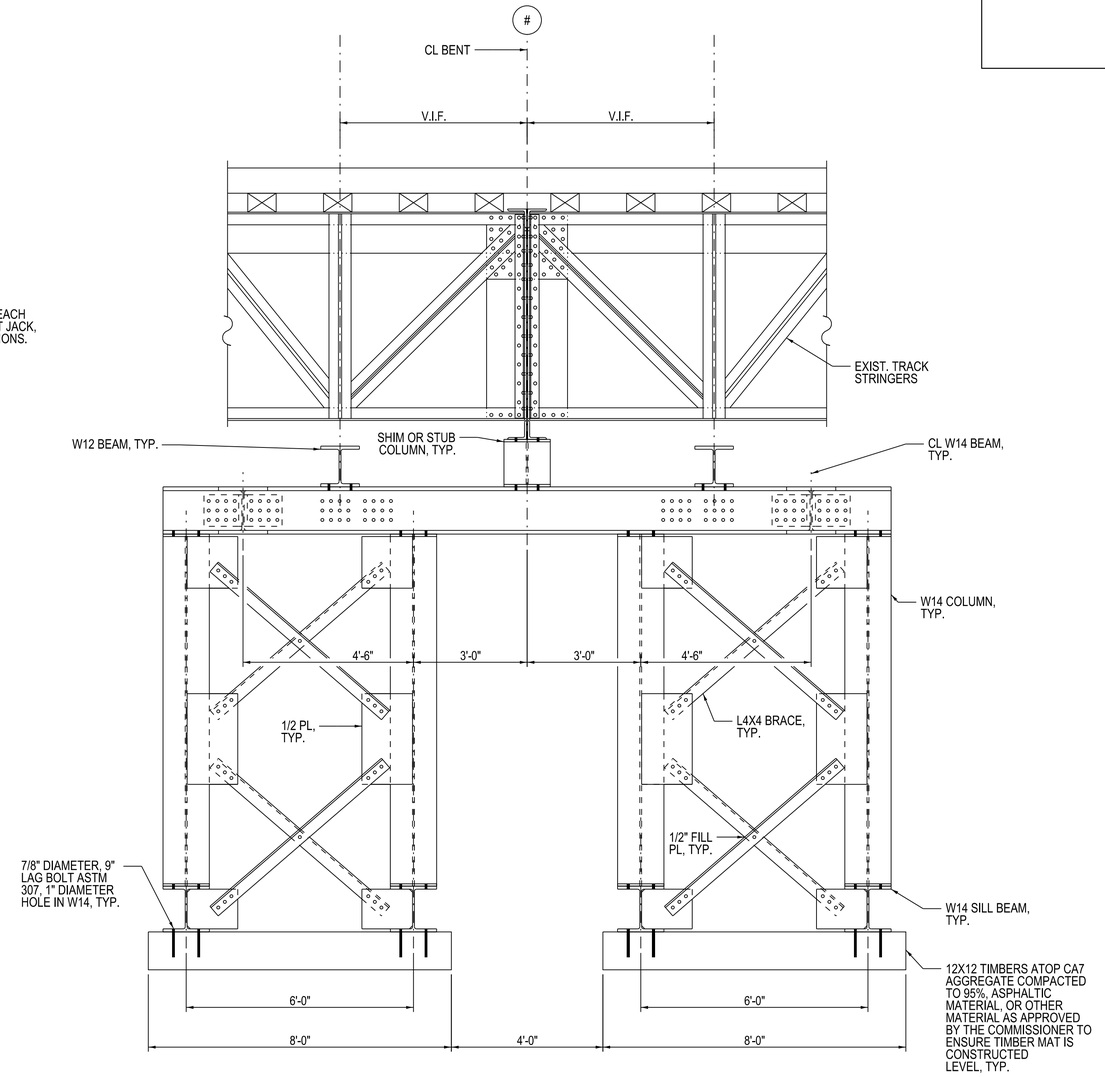

2 SECTION - SHORING TYPE 3 (STAGE 1)

1/2"=1'-0" (LOOKING SOUTH)

NOTES:

1. FOR TEMPORARY SHORING LOCATIONS, SEE SHEET SX-101
2. DIMENSIONS INDICATED FOR EXISTING STRUCTURE ARE TO BE VERIFIED IN THE FIELD.

DESIGN BY:	CMG								
DRAWN BY:	CMG	4	7/3/2023	ISSUED FOR BID					
CHECKED BY:	WJC	1	11/4/2022	PERMIT REVISION #1					
APPROVED BY:	WJC	0	9/9/2022	ISSUED FOR PERMIT					
CDOT/APPROVED BY:		NO.	DATE	REVISIONS	DES.	DRW.	CHK.	DCCO	CDOT

TRANSYSTEMS
222 SOUTH RIVERSIDE PLAZA SUITE 610
CHICAGO, ILLINOIS 60606

SKIDMORE, OWINGS & MERRILL LLP
224 SOUTH MICHIGAN AVENUE, SUITE 1000
CHICAGO, ILLINOIS 60604

CHICAGO DEPARTMENT OF TRANSPORTATION
DIVISION OF ENGINEERING

STATE / LAKE LOOP ELEVATED STATION
200 NORTH STATE STREET, CHICAGO, IL 60601

SUGGESTED SHORING - TYPE 3 (STAGE 1) DETAILS

CDOT PROJECT D-1-209 | DATE: 9/9/2022

SPEC. NO.

DRAWING NO. SX-305

REVISION NO.

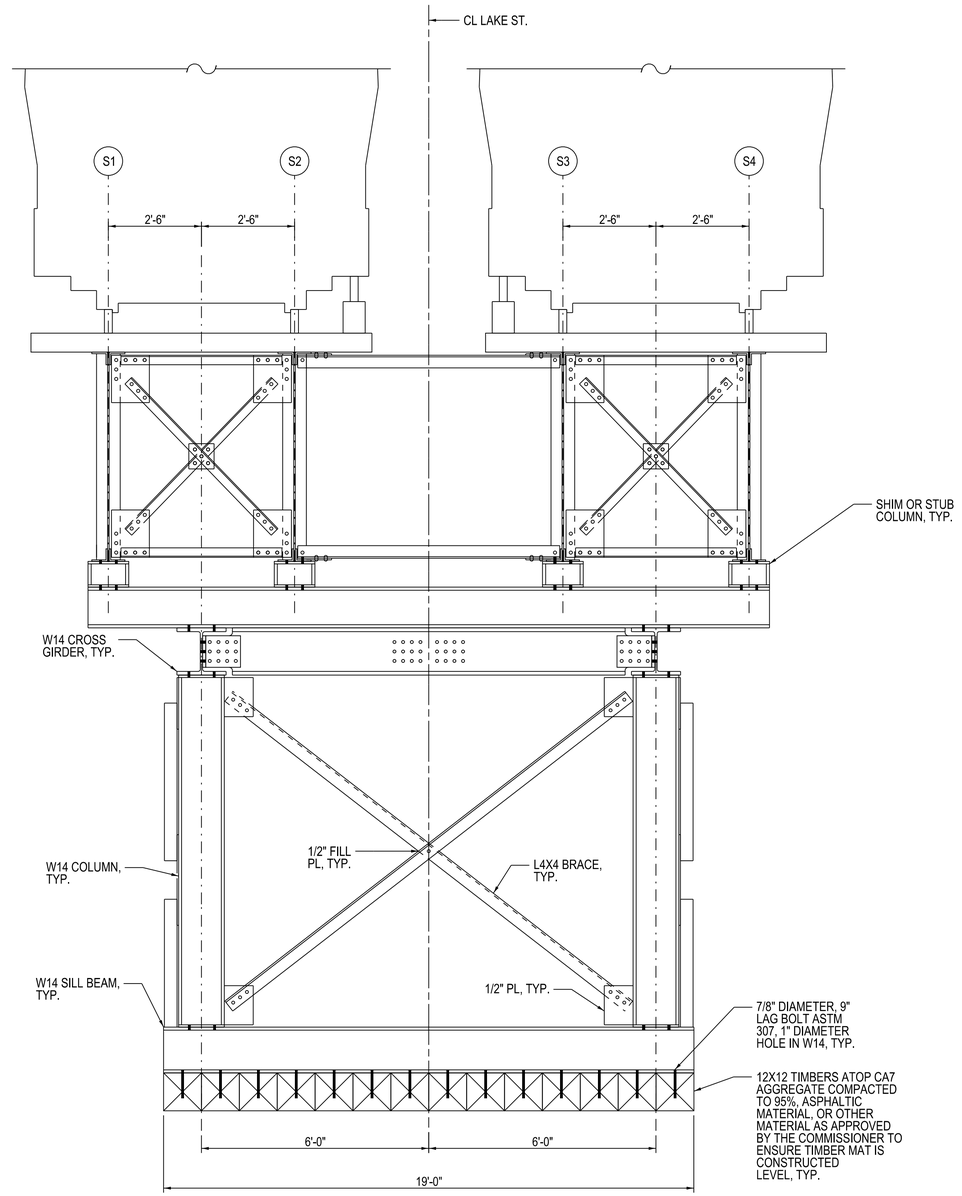

1 ELEVATION VIEW - SHORING TYPE 3 (STAGE 2)

1/2"=1'-0" (LOOKING EAST)

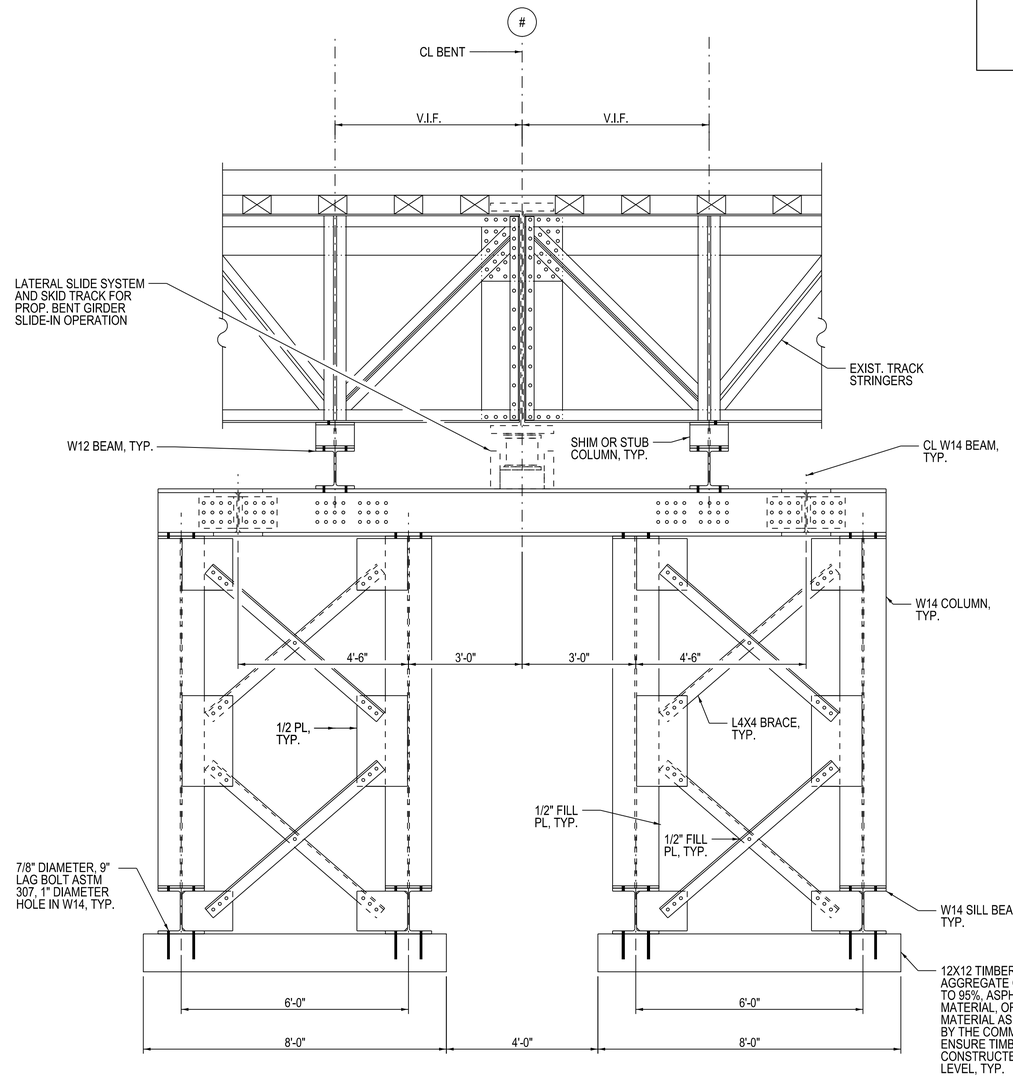

2 SECTION - SHORING TYPE 3 (STAGE 2)

1/2"=1'-0" (LOOKING SOUTH)

NOTES:

1. FOR TEMPORARY SHORING LOCATIONS, SEE SHEET SX-101
2. DIMENSIONS INDICATED FOR EXISTING STRUCTURE ARE TO BE VERIFIED IN THE FIELD.

DESIGN BY:	CMG								
DRAWN BY:	CMG	4	7/3/2023	ISSUED FOR BID					
CHECKED BY:	WJC	1	11/4/2022	PERMIT REVISION #1					
APPROVED BY:	WJC	0	9/9/2022	ISSUED FOR PERMIT					
CDOT/APPROVED BY:		NO.	DATE	REVISIONS	DES.	DRW.	CHK.	DCCO	CDOT

TRANSYSTEMS
222 SOUTH RIVERSIDE PLAZA SUITE 610
CHICAGO, ILLINOIS 60606

SKIDMORE, OWINGS & MERRILL LLP
224 SOUTH MICHIGAN AVENUE, SUITE 1000
CHICAGO, ILLINOIS 60604

CHICAGO DEPARTMENT OF TRANSPORTATION
DIVISION OF ENGINEERING

STATE / LAKE LOOP ELEVATED STATION
200 NORTH STATE STREET, CHICAGO, IL 60601

SUGGESTED SHORING - TYPE 3 (STAGE 2) DETAILS

CDOT PROJECT D-1-209 | DATE: 9/9/2022

SPEC. NO.

DRAWING NO. SX-306

REVISION NO.

GENERAL NOTES:

1. FOR ADDITIONAL STRUCTURAL NOTES, SEE SHEETS S-001 THRU S-003.
2. FOR PROPOSED TRACK STRUCTURE DETAILS, SEE S SHEETS.
3. FOR RIVET REMOVAL PROCEDURE AND OTHER STRUCTURAL DEMOLITION DETAILS, SEE SD SHEETS.
4. THE CONTRACTOR SHALL SURVEY ALL EXISTING TRACK-SUPPORTING STRUCTURES BETWEEN BENTS 442 AND 453 AND REPORT ANY SECTION LOSS (GREATER THAN 5%), MISCELLANEOUS DAMAGE TO STRUCTURAL ELEMENTS, AND ANY AND ALL DAMAGE OR MISSING RIVETS. THIS SURVEY SHALL BE IN ADDITION TO ANY SPECIFIC REPAIR OR REPLACEMENT NOTED ON THE STRUCTURAL REPAIR DRAWINGS. ITEMS WORTHY OF NOTE SHALL BE SUBMITTED TO THE COMMISSIONER. CONTRACTOR SHALL INCLUDE WITHIN THEIR BID AN ALLOWANCE FOR EXISTING TRACK STRUCTURE REPAIR.
5. ALL DIMENSIONS REFERENCING EXISTING STRUCTURAL MEMBERS ARE TO BE VERIFIED IN THE FIELD.
6. WHERE EXISTING RIVETS ARE FOUND TO BE MISSING, DAMAGED, OR CORRODED, CONTRACTOR SHALL REMOVE AND REPLACE RIVETS WITH 7/8" Ø A325 BOLTS UNLESS A 1" Ø A325 BOLT IS REQUIRED PER THE RIVET REMOVAL DETAIL.
7. WHERE EXISTING RIVET HEADS ARE DETERIORATED AND HAVE MORE THAN 50 PERCENT SECTION LOSS, REPLACE RIVETS WITH 7/8" Ø A325 SC BOLTS. REPLACE RIVETS WITH BOLTS WHEREVER SUCH CONDITIONS ARE ENCOUNTERED INCLUDING CASES NOT INDICATED IN DRAWINGS.
8. WHERE EXISTING 7/8" Ø BOLTS HAVE LOOSENED, FALLEN OUT, OR WERE NOT PROPERLY TIGHTENED WHEN INSTALLED, REPLACE WITH NEW 7/8" Ø A325 SC BOLTS. REPLACE BOLTS WHEREVER SUCH CONDITIONS ARE ENCOUNTERED INCLUDED CASES NOT INDICATED IN DRAWINGS.
9. IT IS THE CONTRACTOR'S RESPONSIBILITY TO TAKE MEASUREMENTS IN THE FIELD OF EXISTING STRUCTURE WHEREVER NEW STEEL IS TO BE REPLACED OR CONNECTED INTO THE EXISTING MATERIAL PRIOR TO ORDERING OR FABRICATING ANY NEW STEEL. THE CONTRACTOR SHALL BE RESPONSIBLE FOR THE PROPER FITTING AND ASSEMBLY OF ALL PARTS OF THE WORK.
10. WHERE ACCESSIBLE, CLEAN FAYING SURFACES OF THE EXISTING STEEL ACCORDING TO THE REQUIREMENTS FOR POWER TOOL CLEANING, SSPC-SP3. COAT FAYING SURFACE WITH PRIMER AFTER CLEANING.
11. ONLY ONE LINE OF RIVETS (3 RIVETS) SHALL BE REMOVED AND COMPLETELY REPLACED WITH EITHER TEMPORARY OR PERMANENT BOLTS AT A TIME PER SPAN.
12. EXISTING COLUMNS, BEAMS, AND CONNECTIONS SHALL BE MONITORED DURING REPAIRS. ANY EXCESSIVE DEFLECTION SHALL BE REMEDIED BY THE CONTRACTOR AT THE CONTRACTOR'S EXPENSE.

DESIGN BY:	BMJ								
DRAWN BY:	BMJ	4	7/3/2023	ISSUED FOR BID					
CHECKED BY:	MDS	1	11/4/2022	PERMIT REVISION #1					
APPROVED BY:	WJC	0	9/9/2022	ISSUED FOR PERMIT					
CDOT/APPROVED BY:		NO.	DATE	REVISIONS	DES.	DRW.	CHK.	DCCO	CDOT

TRANSYSTEMS
222 SOUTH RIVERSIDE PLAZA SUITE 610
CHICAGO, ILLINOIS 60606

SKIDMORE, OWINGS & MERRILL LLP
224 SOUTH MICHIGAN AVENUE, SUITE 1000
CHICAGO, ILLINOIS 60604

CHICAGO DEPARTMENT
OF TRANSPORTATION
DIVISION OF ENGINEERING

STATE / LAKE LOOP ELEVATED STATION
200 NORTH STATE STREET, CHICAGO, IL 60601

STRUCTURAL REPAIR NOTES

CDOT PROJECT D-1-209

DATE: 9/9/2022

SPEC. NO.

DRAWING NO. SR-001

REVISION NO.

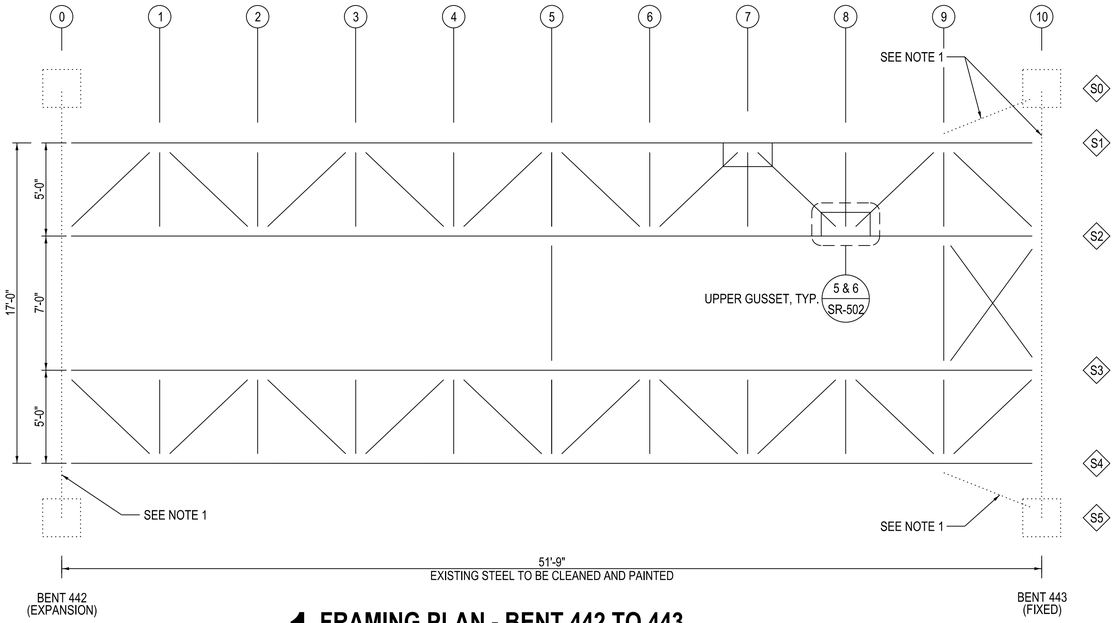

1 FRAMING PLAN - BENT 442 TO 443

1/4" = 1'-0"

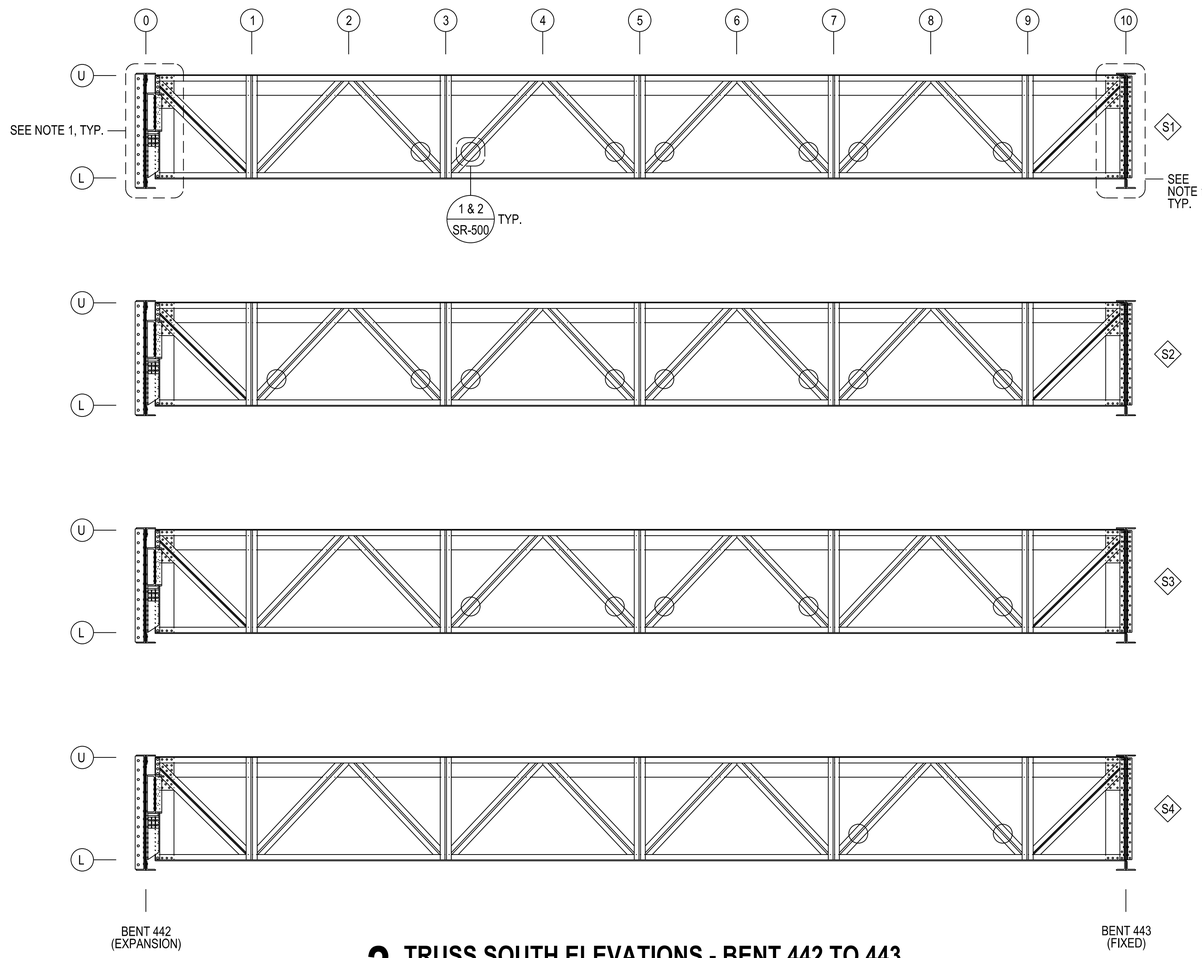

2 TRUSS SOUTH ELEVATIONS - BENT 442 TO 443

1/4" = 1'-0" (LOOKING NORTH)

LEGEND

- (##) PANEL POINT DESIGNATION
- S# TRUSS DESIGNATION
- GUSSET REPAIR LOCATION
- TRUSS DIAGONAL REPAIR LOCATION

NOTES:

1. BENTS, EXTERIOR LATERAL BRACING MEMBERS AND CONNECTIONS FROM EXISTING TRACK STRINGERS TO BENTS TO BE REMOVED AND REPLACED. SEE SHEETS S-114 TO S-116 AND S-300 TO S-310 FOR ADDITIONAL DETAILS.

DESIGN BY:	BMJ								
DRAWN BY:	NRH	4	7/3/2023	ISSUED FOR BID					
CHECKED BY:	RVV	1	11/4/2022	PERMIT REVISION #1					
APPROVED BY:	WJC	0	9/9/2022	ISSUED FOR PERMIT					
CDOT/APPROVED BY:		NO.	DATE	REVISIONS	DES.	DRW.	CHK.	DCCO	CDOT

TRANSYSTEMS
222 SOUTH RIVERSIDE PLAZA SUITE 610
CHICAGO, ILLINOIS 60606

SKIDMORE, OWINGS & MERRILL LLP
224 SOUTH MICHIGAN AVENUE, SUITE 1000
CHICAGO, ILLINOIS 60604

CHICAGO DEPARTMENT OF TRANSPORTATION
DIVISION OF ENGINEERING

STATE / LAKE LOOP ELEVATED STATION
200 NORTH STATE STREET, CHICAGO, IL 60601

REPAIR PLAN AND ELEVATION 1 (BENT 442-443)

CDOT PROJECT D-1-209

DATE: 9/9/2022

SPEC. NO.

DRAWING NO. SR-100

REVISION NO.

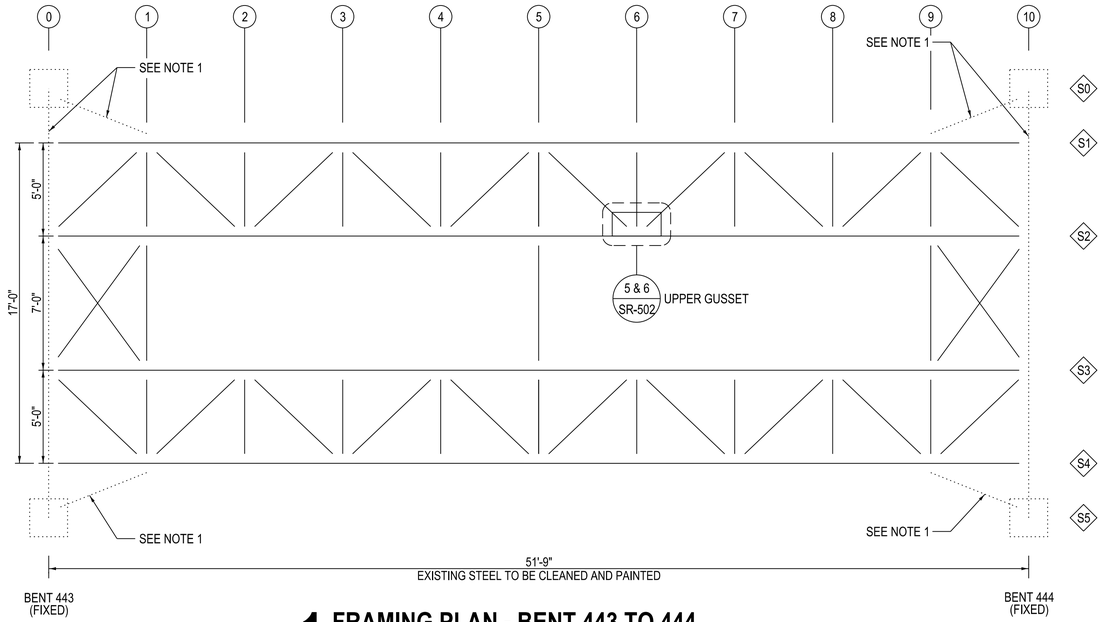

1 FRAMING PLAN - BENT 443 TO 444

1/4" = 1'-0"

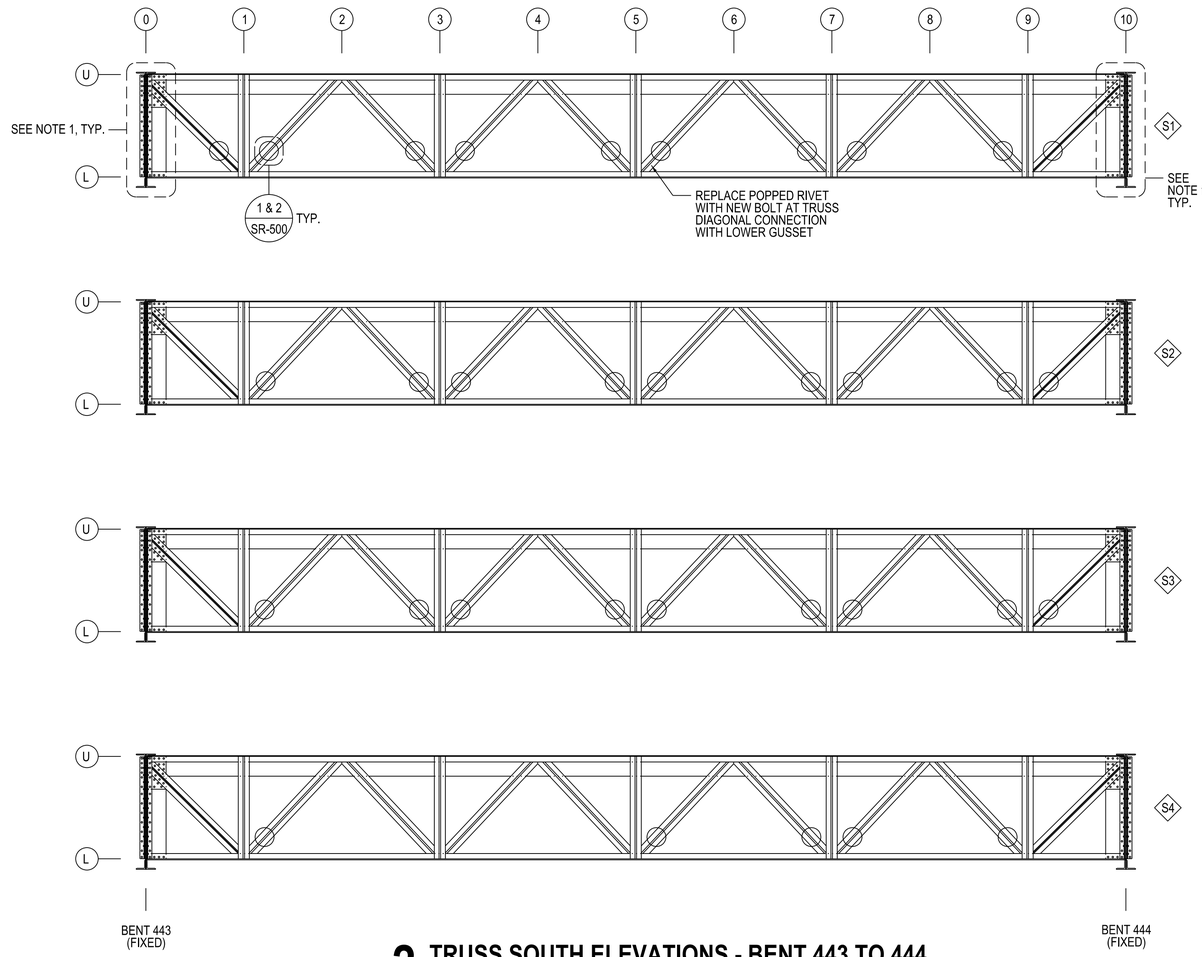

2 TRUSS SOUTH ELEVATIONS - BENT 443 TO 444

1/4" = 1'-0" (LOOKING NORTH)

LEGEND

- (##) PANEL POINT DESIGNATION
- S# TRUSS DESIGNATION
- GUSSET REPAIR LOCATION
- TRUSS DIAGONAL REPAIR LOCATION

NOTES:

1. BENTS, EXTERIOR LATERAL BRACING MEMBERS AND CONNECTIONS FROM EXISTING TRACK STRINGERS TO BENTS TO BE REMOVED AND REPLACED. SEE SHEETS S-114 TO S-116 AND S-300 TO S-310 FOR ADDITIONAL DETAILS.

DESIGN BY:	BMJ								
DRAWN BY:	NRH	4	7/3/2023	ISSUED FOR BID					
CHECKED BY:	RVV	1	11/4/2022	PERMIT REVISION #1					
APPROVED BY:	WJC	0	9/9/2022	ISSUED FOR PERMIT					
CDOT/APPROVED BY:		NO.	DATE	REVISIONS	DES.	DRW.	CHK.	DCCO	CDOT

TRANSYSTEMS
222 SOUTH RIVERSIDE PLAZA SUITE 610
CHICAGO, ILLINOIS 60606

SKIDMORE, OWINGS & MERRILL LLP
224 SOUTH MICHIGAN AVENUE, SUITE 1000
CHICAGO, ILLINOIS 60604

CHICAGO DEPARTMENT
OF TRANSPORTATION
DIVISION OF ENGINEERING

STATE / LAKE LOOP ELEVATED STATION
200 NORTH STATE STREET, CHICAGO, IL 60601

REPAIR PLAN AND ELEVATION 2 (BENT 443-444)

CDOT PROJECT D-1-209

DATE: 9/9/2022

SPEC. NO.

DRAWING NO. SR-101

REVISION NO.

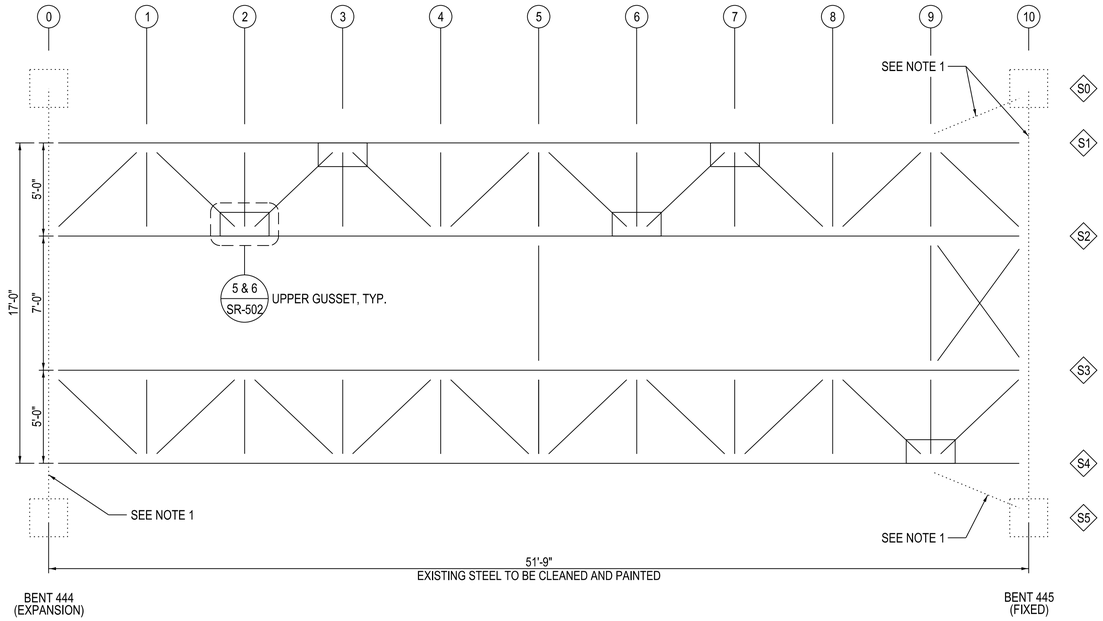

1 FRAMING PLAN - BENT 444 TO 445

1/4" = 1'-0"

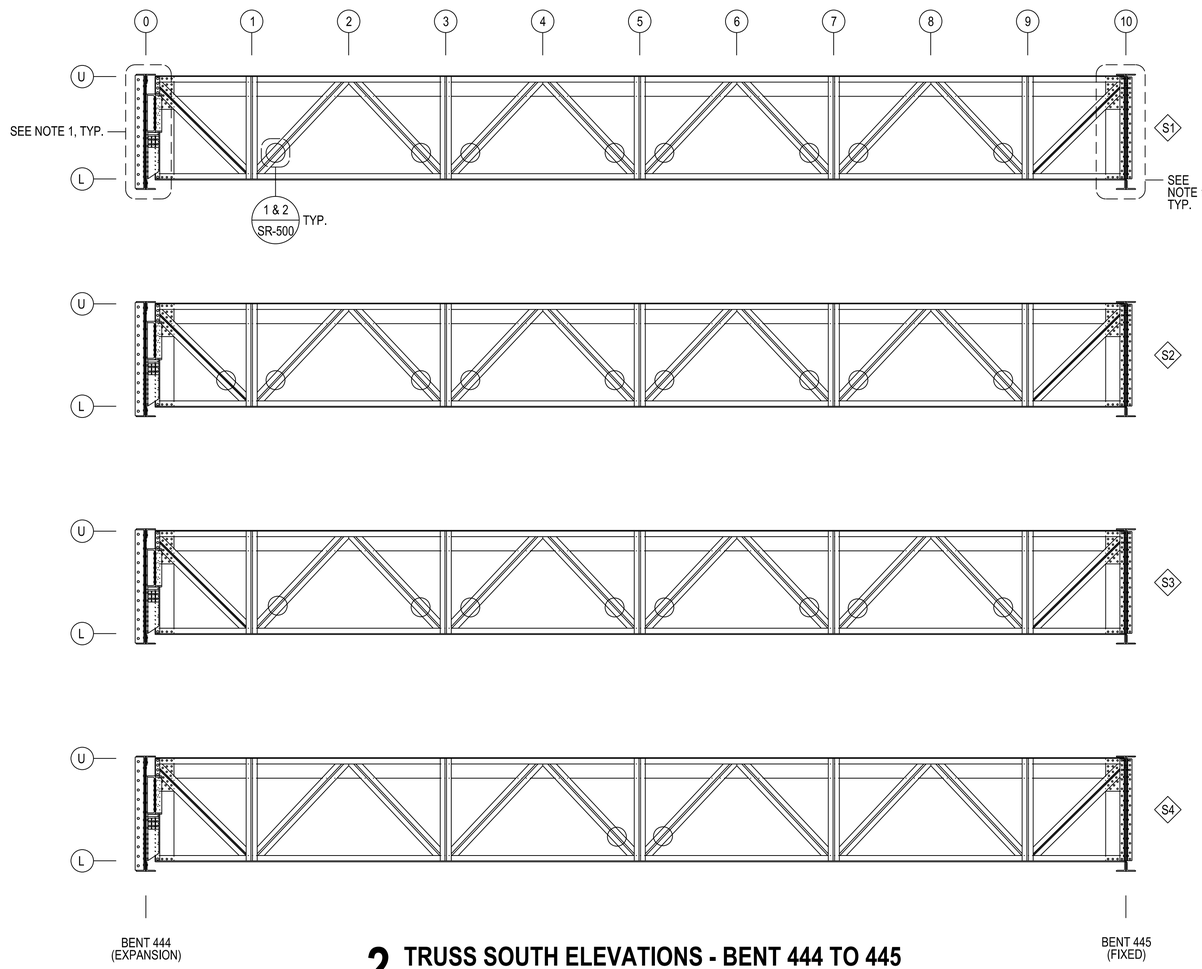

2 TRUSS SOUTH ELEVATIONS - BENT 444 TO 445

1/4" = 1'-0" (LOOKING NORTH)

LEGEND

- (##) PANEL POINT DESIGNATION
- S# TRUSS DESIGNATION
- GUSSET REPAIR LOCATION
- TRUSS DIAGONAL REPAIR LOCATION

NOTES:

1. BENTS, EXTERIOR LATERAL BRACING MEMBERS AND CONNECTIONS FROM EXISTING TRACK STRINGERS TO BENTS TO BE REMOVED AND REPLACED. SEE SHEETS S-114 TO S-116 AND S-300 TO S-310 FOR ADDITIONAL DETAILS.

DESIGN BY:	BMJ								
DRAWN BY:	NRH	4	7/3/2023	ISSUED FOR BID					
CHECKED BY:	RVV	1	11/4/2022	PERMIT REVISION #1					
APPROVED BY:	WJC	0	9/9/2022	ISSUED FOR PERMIT					
CDOT/APPROVED BY:		NO.	DATE	REVISIONS	DES.	DRW.	CHK.	DCCO	CDOT

TRANSYSTEMS
222 SOUTH RIVERSIDE PLAZA SUITE 610
CHICAGO, ILLINOIS 60606

SKIDMORE, OWINGS & MERRILL LLP
224 SOUTH MICHIGAN AVENUE, SUITE 1000
CHICAGO, ILLINOIS 60604

CHICAGO DEPARTMENT OF TRANSPORTATION
DIVISION OF ENGINEERING

STATE / LAKE LOOP ELEVATED STATION
200 NORTH STATE STREET, CHICAGO, IL 60601

REPAIR PLAN AND ELEVATION 3 (BENT 444-445)

CDOT PROJECT D-1-209

DATE: 9/9/2022

SPEC. NO.

DRAWING NO. SR-102

REVISION NO.

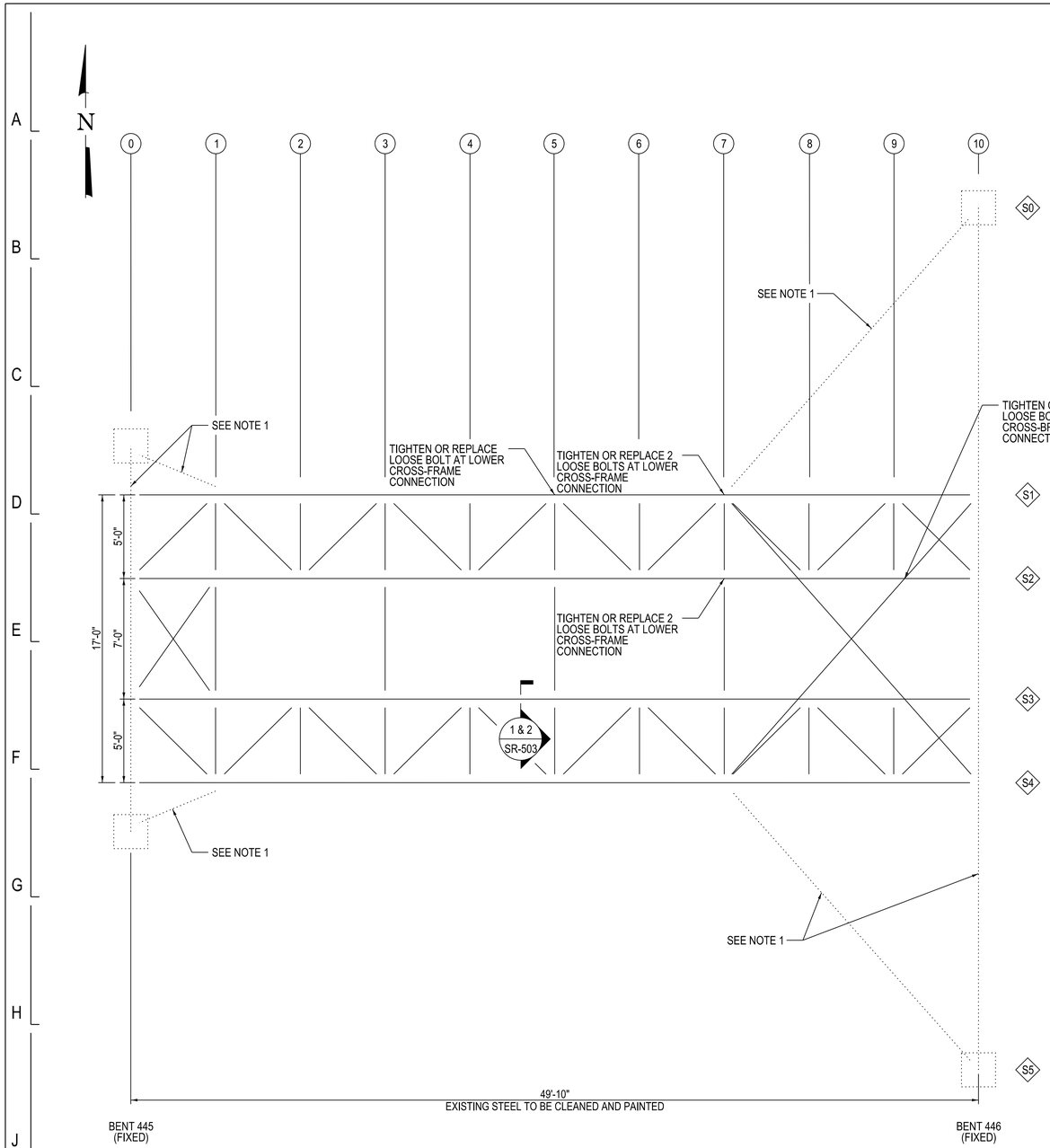

1 FRAMING PLAN - BENT 445 TO 446

1/4" = 1'-0"

LEGEND

- (##) PANEL POINT DESIGNATION
- S# TRUSS DESIGNATION
- TRUSS DIAGONAL REPAIR LOCATION

NOTES:

1. BENTS, EXTERIOR LATERAL BRACING MEMBERS AND CONNECTIONS FROM EXISTING TRACK STRINGERS TO BENTS TO BE REMOVED AND REPLACED. SEE SHEETS S-114 TO S-116 AND S-300 TO S-310 FOR ADDITIONAL DETAILS.

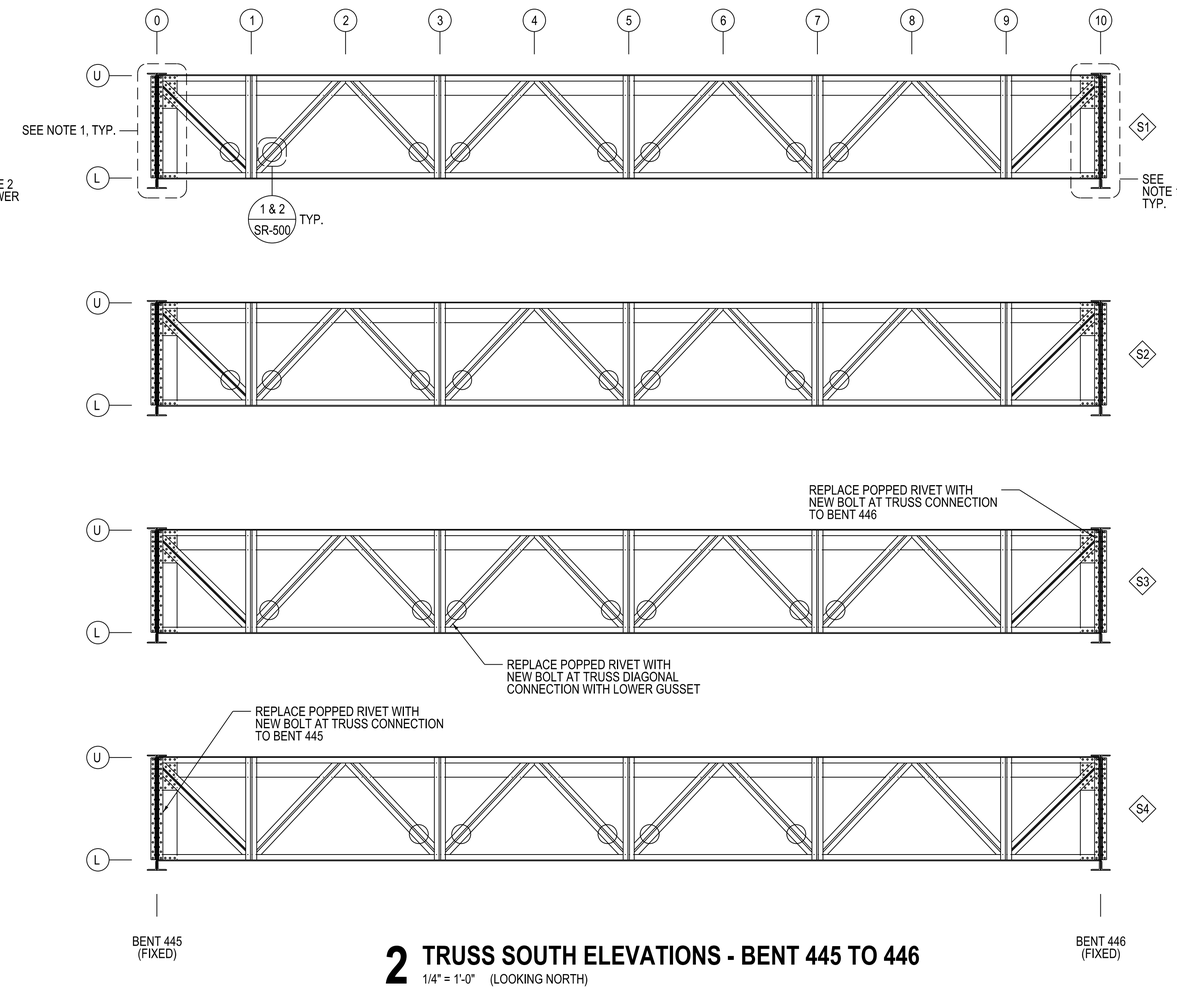

2 TRUSS SOUTH ELEVATIONS - BENT 445 TO 446

1/4" = 1'-0" (LOOKING NORTH)

DESIGN BY:	BMJ								
DRAWN BY:	NRH	4	7/3/2023	ISSUED FOR BID					
CHECKED BY:	RVV	1	11/4/2022	PERMIT REVISION #1					
APPROVED BY:	WJC	0	9/9/2022	ISSUED FOR PERMIT					
CDOT/APPROVED BY:		NO.	DATE	REVISIONS	DES.	DRW.	CHK.	DCCO	CDOT

TRANSYSTEMS
222 SOUTH RIVERSIDE PLAZA SUITE 610
CHICAGO, ILLINOIS 60606

SKIDMORE, OWINGS & MERRILL LLP
224 SOUTH MICHIGAN AVENUE, SUITE 1000
CHICAGO, ILLINOIS 60604

CHICAGO DEPARTMENT OF TRANSPORTATION
DIVISION OF ENGINEERING

STATE / LAKE LOOP ELEVATED STATION
200 NORTH STATE STREET, CHICAGO, IL 60601

REPAIR PLAN AND ELEVATION 4 (BENT 445-446)

CDOT PROJECT D-1-209

DATE: 9/9/2022

SPEC. NO.

DRAWING NO. SR-103

REVISION NO.

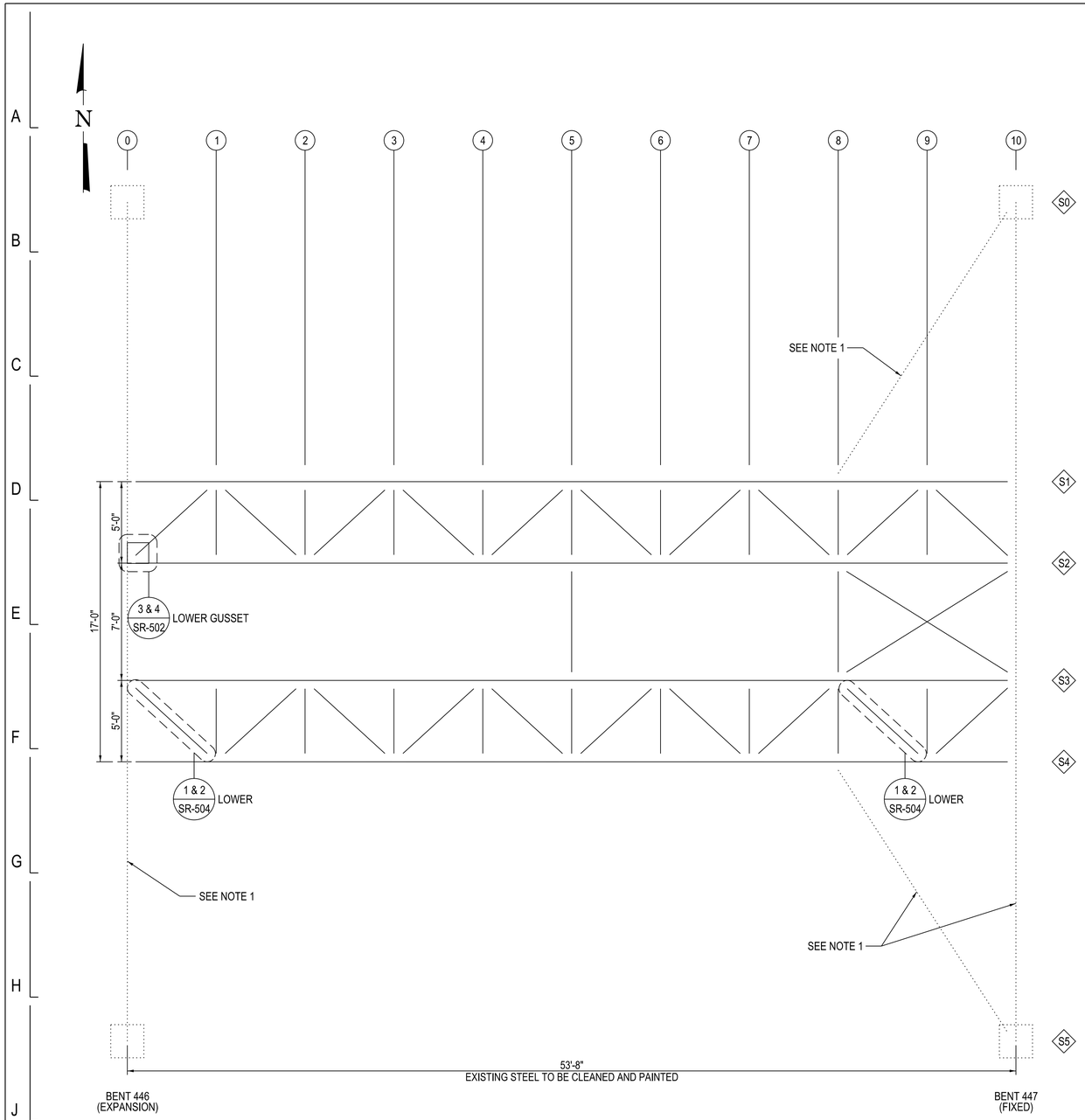

1 CROSS-FRAMING PLAN - BENT 446 TO 447

1/4" = 1'-0"

LEGEND

- (##) PANEL POINT DESIGNATION
- S# TRUSS DESIGNATION
- TRUSS DIAGONAL REPAIR LOCATION
- GUSSET REPAIR LOCATION

NOTES:

1. BENTS, EXTERIOR LATERAL BRACING MEMBERS AND CONNECTIONS FROM EXISTING TRACK STRINGERS TO BENTS TO BE REMOVED AND REPLACED. SEE SHEETS S-114 TO S-116 AND S-300 TO S-310 FOR ADDITIONAL DETAILS.

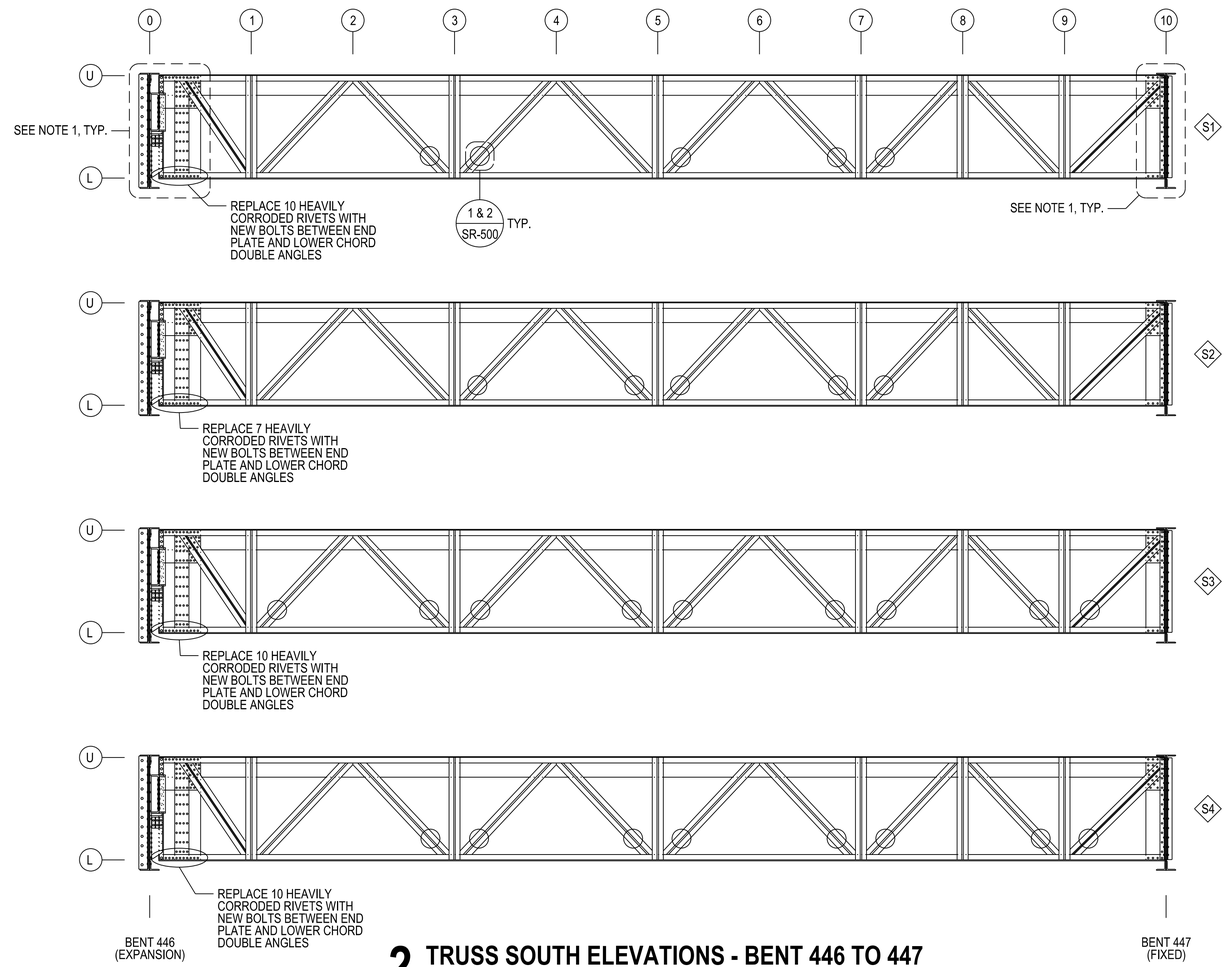

2 TRUSS SOUTH ELEVATIONS - BENT 446 TO 447

1/4" = 1'-0" (LOOKING NORTH)

DESIGN BY:	BMJ									
DRAWN BY:	NRH	4	7/3/2023	ISSUED FOR BID						
CHECKED BY:	RVV	1	11/4/2022	PERMIT REVISION #1						
APPROVED BY:	WJC	0	9/9/2022	ISSUED FOR PERMIT						
CDOT/APPROVED BY:		NO.	DATE	REVISIONS	DES.	DRW.	CHK.	DCCO	CDOT	

TRANSYSTEMS
222 SOUTH RIVERSIDE PLAZA SUITE 610
CHICAGO, ILLINOIS 60606

SKIDMORE, OWINGS & MERRILL LLP
224 SOUTH MICHIGAN AVENUE, SUITE 1000
CHICAGO, ILLINOIS 60604

CHICAGO DEPARTMENT OF TRANSPORTATION
DIVISION OF ENGINEERING

STATE / LAKE LOOP ELEVATED STATION
200 NORTH STATE STREET, CHICAGO, IL 60601

REPAIR PLAN AND ELEVATION 5 (BENT 446-447)

CDOT PROJECT D-1-209

DATE: 9/9/2022

SPEC. NO.

DRAWING NO. SR-104

REVISION NO.

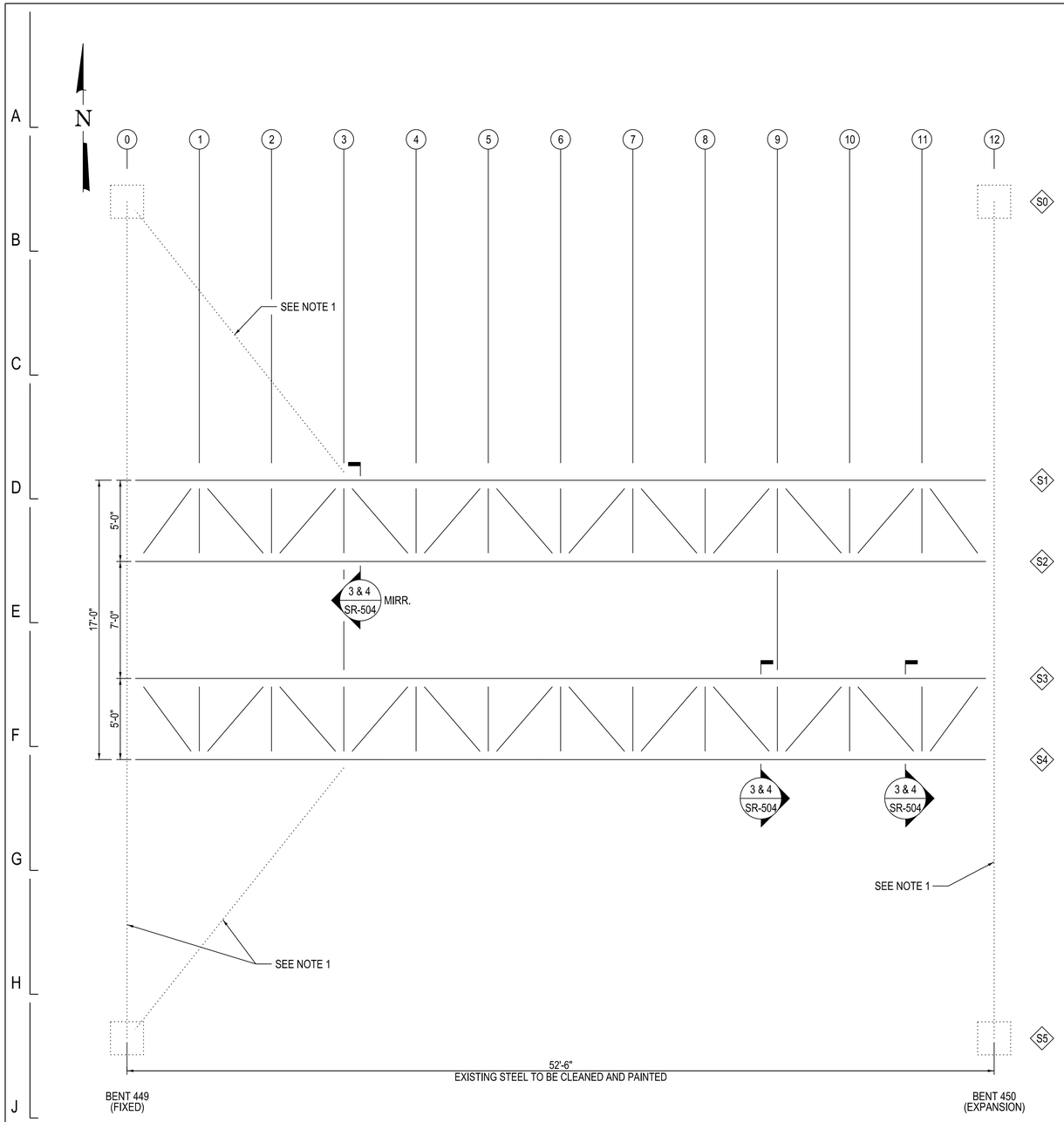

1 FRAMING PLAN - BENT 449 TO 450

1/4" = 1'-0"

LEGEND

- (##) PANEL POINT DESIGNATION
- S# TRUSS DESIGNATION
- TRUSS DIAGONAL REPAIR LOCATION

NOTES:

1. BENTS, EXTERIOR LATERAL BRACING MEMBERS AND CONNECTIONS FROM EXISTING TRACK STRINGERS TO BENTS TO BE REMOVED AND REPLACED. SEE SHEETS S-114 TO S-116 AND S-300 TO S-310 FOR ADDITIONAL DETAILS.

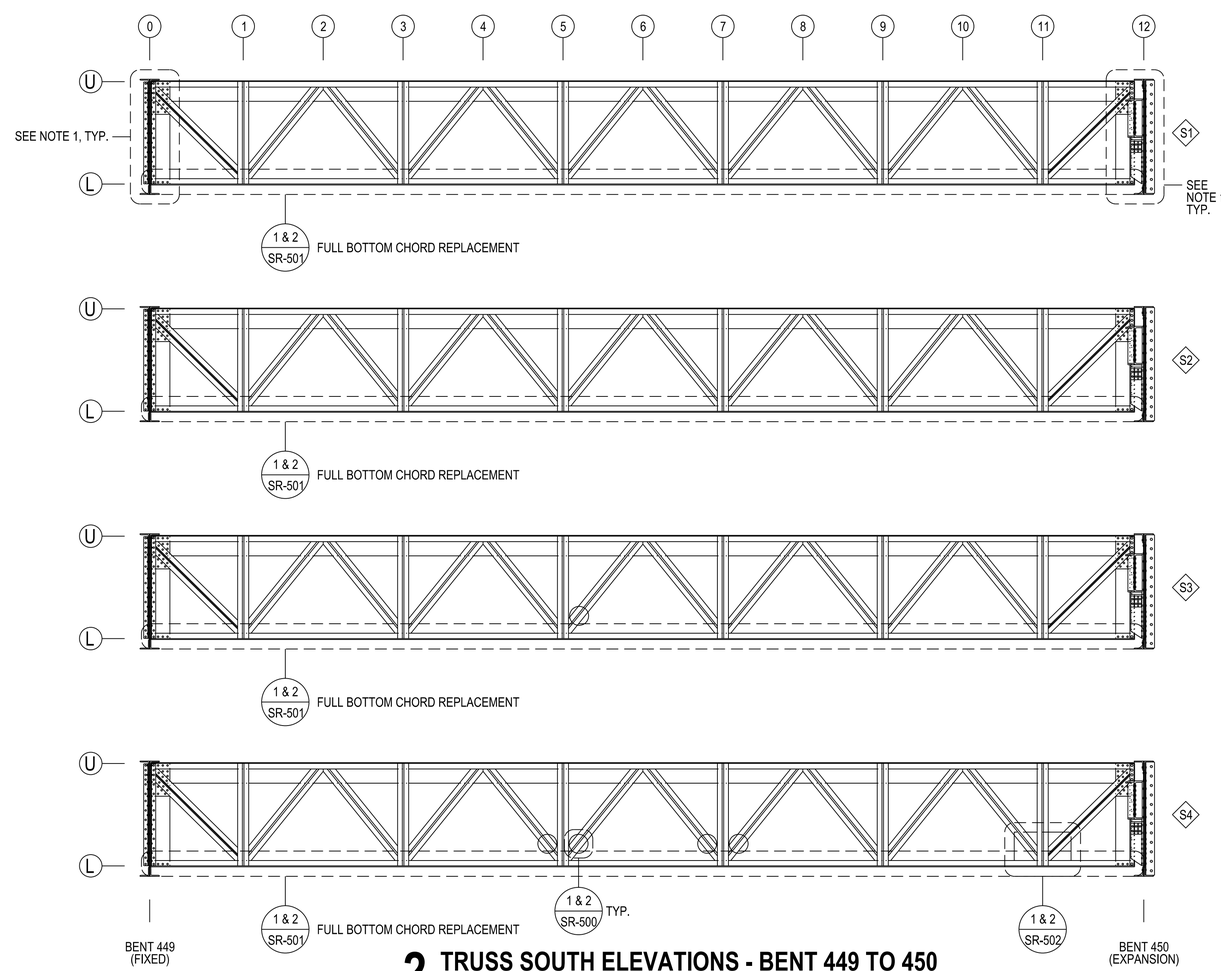

2 TRUSS SOUTH ELEVATIONS - BENT 449 TO 450

1/4" = 1'-0" (LOOKING NORTH)

DESIGN BY:	BMJ								
DRAWN BY:	NRH	4	7/3/2023	ISSUED FOR BID					
CHECKED BY:	RVV	1	11/4/2022	PERMIT REVISION #1					
APPROVED BY:	WJC	0	9/9/2022	ISSUED FOR PERMIT					
CDOT/APPROVED BY:		NO.	DATE	REVISIONS	DES.	DRW.	CHK.	DCCO	CDOT

TRANSYSTEMS
222 SOUTH RIVERSIDE PLAZA SUITE 610
CHICAGO, ILLINOIS 60606

SKIDMORE, OWINGS & MERRILL LLP
224 SOUTH MICHIGAN AVENUE, SUITE 1000
CHICAGO, ILLINOIS 60604

CHICAGO DEPARTMENT OF TRANSPORTATION
DIVISION OF ENGINEERING

STATE / LAKE LOOP ELEVATED STATION
200 NORTH STATE STREET, CHICAGO, IL 60601

SPEC. NO.

REPAIR PLAN AND ELEVATION 6 (BENT 449-450)

DRAWING NO. SR-105

CDOT PROJECT D-1-209

DATE: 9/9/2022

REVISION NO.

LEGEND

- (##) PANEL POINT DESIGNATION
- S# TRUSS DESIGNATION
- GUSSET REPAIR LOCATION
- TRUSS DIAGONAL REPAIR LOCATION

NOTES:

1. BENTS, EXTERIOR LATERAL BRACING MEMBERS AND CONNECTIONS FROM EXISTING TRACK STRINGERS TO BENTS TO BE REMOVED AND REPLACED. SEE SHEETS S-114 TO S-116 AND S-300 TO S-310 FOR ADDITIONAL DETAILS.

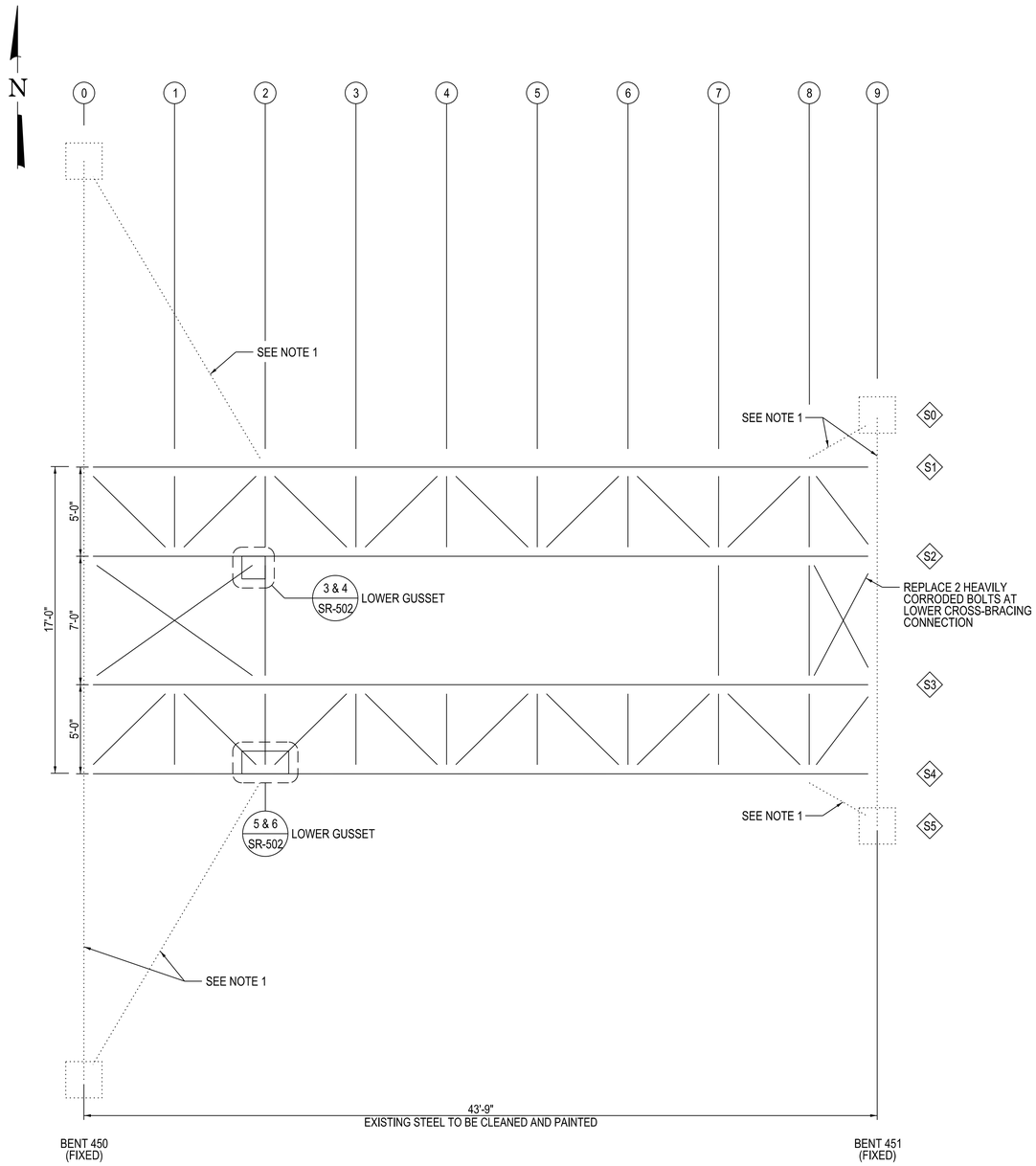

1 FRAMING PLAN - BENT 450 TO 451

1/4" = 1'-0"

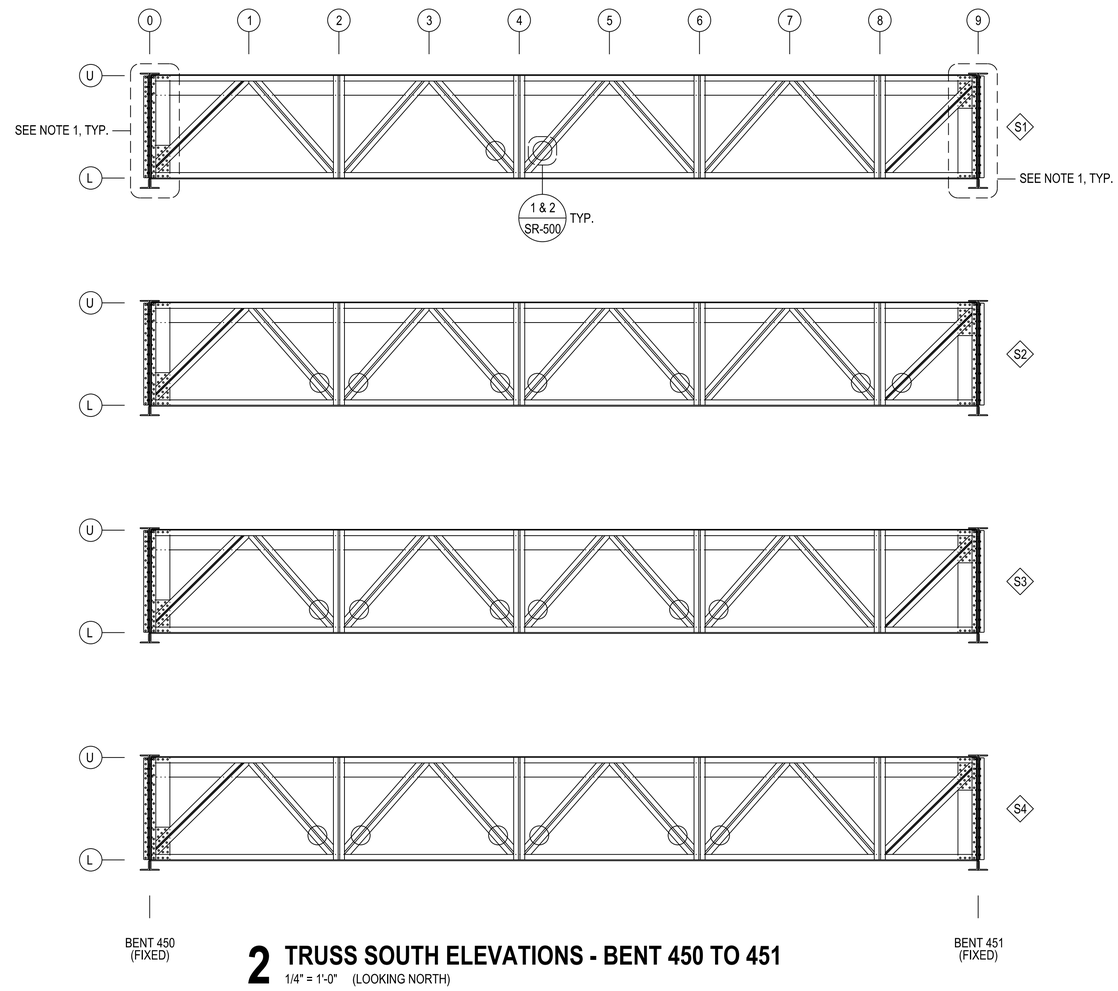

2 TRUSS SOUTH ELEVATIONS - BENT 450 TO 451

1/4" = 1'-0" (LOOKING NORTH)

DESIGN BY:	BMJ									
DRAWN BY:	NRH	4	7/3/2023	ISSUED FOR BID						
CHECKED BY:	RVV	1	11/4/2022	PERMIT REVISION #1						
APPROVED BY:	WJC	0	9/9/2022	ISSUED FOR PERMIT						
CDOT/APPROVED BY:		NO.	DATE	REVISIONS	DES.	DRW.	CHK.	DCCO	CDOT	

TRANSYSTEMS
222 SOUTH RIVERSIDE PLAZA SUITE 610
CHICAGO, ILLINOIS 60606

SKIDMORE, OWINGS & MERRILL LLP
224 SOUTH MICHIGAN AVENUE, SUITE 1000
CHICAGO, ILLINOIS 60604

CHICAGO DEPARTMENT OF TRANSPORTATION
DIVISION OF ENGINEERING

STATE / LAKE LOOP ELEVATED STATION
200 NORTH STATE STREET, CHICAGO, IL 60601

REPAIR PLAN AND ELEVATION 7 (BENT 450-451)

CDOT PROJECT D-1-209 | DATE: 9/9/2022

SPEC. NO.

DRAWING NO. SR-106

REVISION NO.

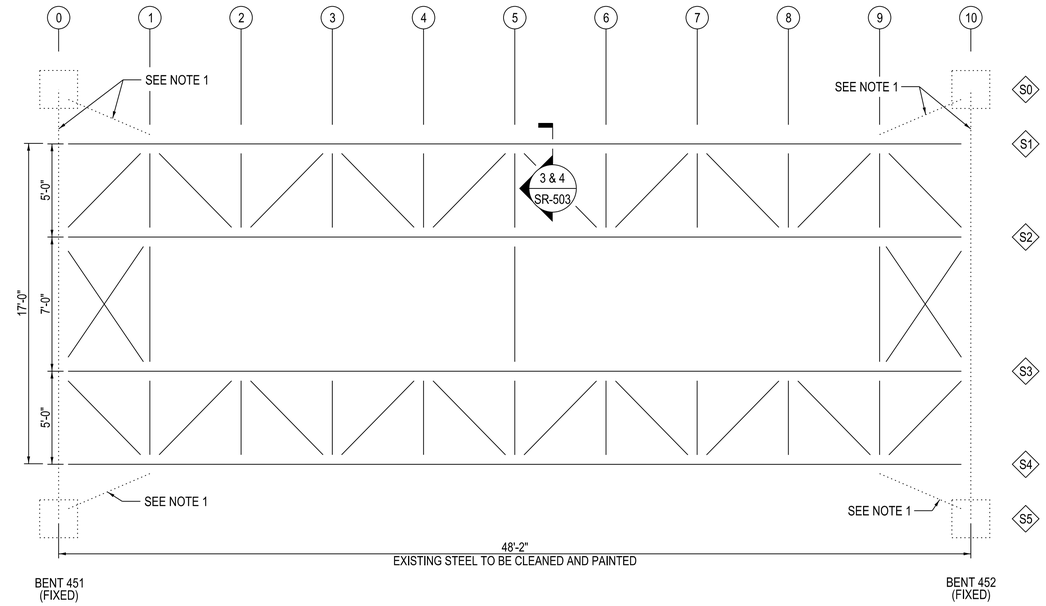

1 FRAMING PLAN - BENT 451 TO 452

1/4" = 1'-0"

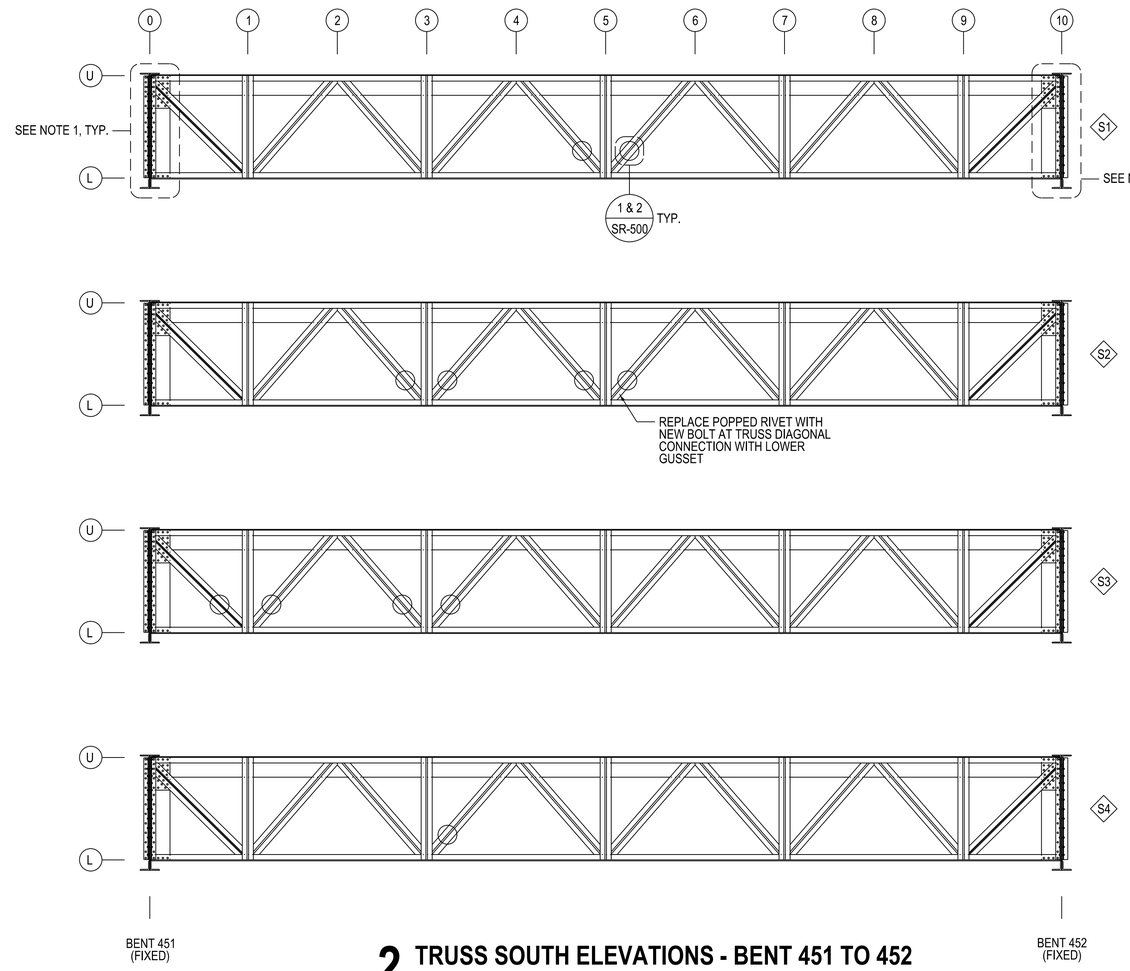

2 TRUSS SOUTH ELEVATIONS - BENT 451 TO 452

1/4" = 1'-0" (LOOKING NORTH)

LEGEND

- (##) PANEL POINT DESIGNATION
- S# TRUSS DESIGNATION
- TRUSS DIAGONAL REPAIR LOCATION

NOTES:

1. BENTS, EXTERIOR LATERAL BRACING MEMBERS AND CONNECTIONS FROM EXISTING TRACK STRINGERS TO BENTS TO BE REMOVED AND REPLACED. SEE SHEETS S-114 TO S-116 AND S-300 TO S-310 FOR ADDITIONAL DETAILS.

DESIGN BY:	BMJ								
DRAWN BY:	NRH	4	7/3/2023	ISSUED FOR BID					
CHECKED BY:	RVV	1	11/4/2022	PERMIT REVISION #1					
APPROVED BY:	WJC	0	9/9/2022	ISSUED FOR PERMIT					
CDOT/APPROVED BY:		NO.	DATE	REVISIONS	DES.	DRW.	CHK.	DCCO	CDOT

TRANSYSTEMS
222 SOUTH RIVERSIDE PLAZA SUITE 610
CHICAGO, ILLINOIS 60606

SKIDMORE, OWINGS & MERRILL LLP
224 SOUTH MICHIGAN AVENUE, SUITE 1000
CHICAGO, ILLINOIS 60604

CHICAGO DEPARTMENT
OF TRANSPORTATION
DIVISION OF ENGINEERING

STATE / LAKE LOOP ELEVATED STATION
200 NORTH STATE STREET, CHICAGO, IL 60601

SPEC. NO.

REPAIR PLAN AND ELEVATION 8 (BENT 451-452)

DRAWING NO.
SR-107

CDOT PROJECT D-1-209

DATE: 9/9/2022

REVISION NO.

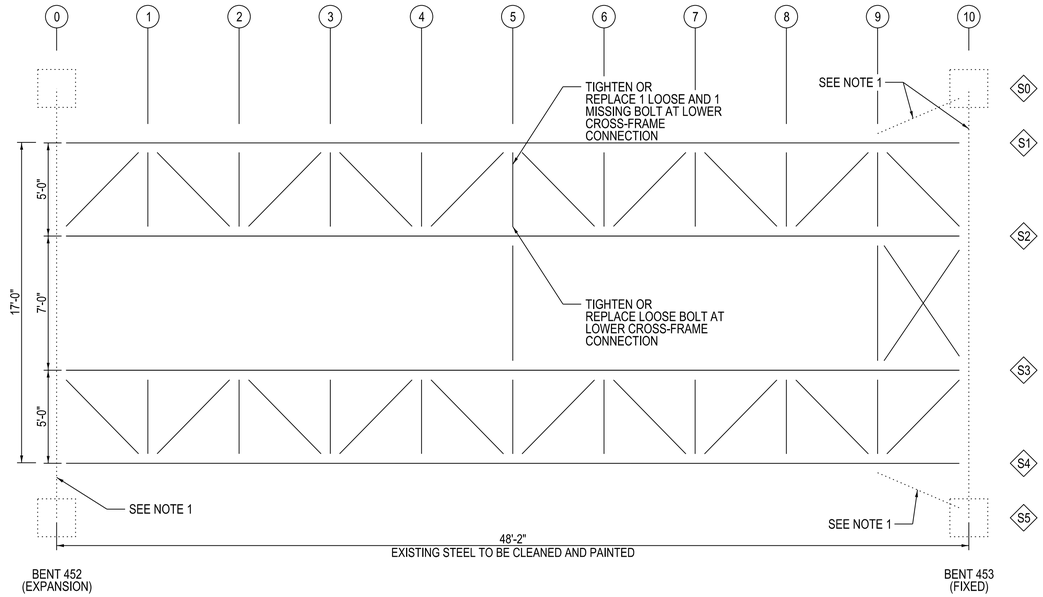

1 FRAMING PLAN - BENT 452 TO 453

1/4" = 1'-0"

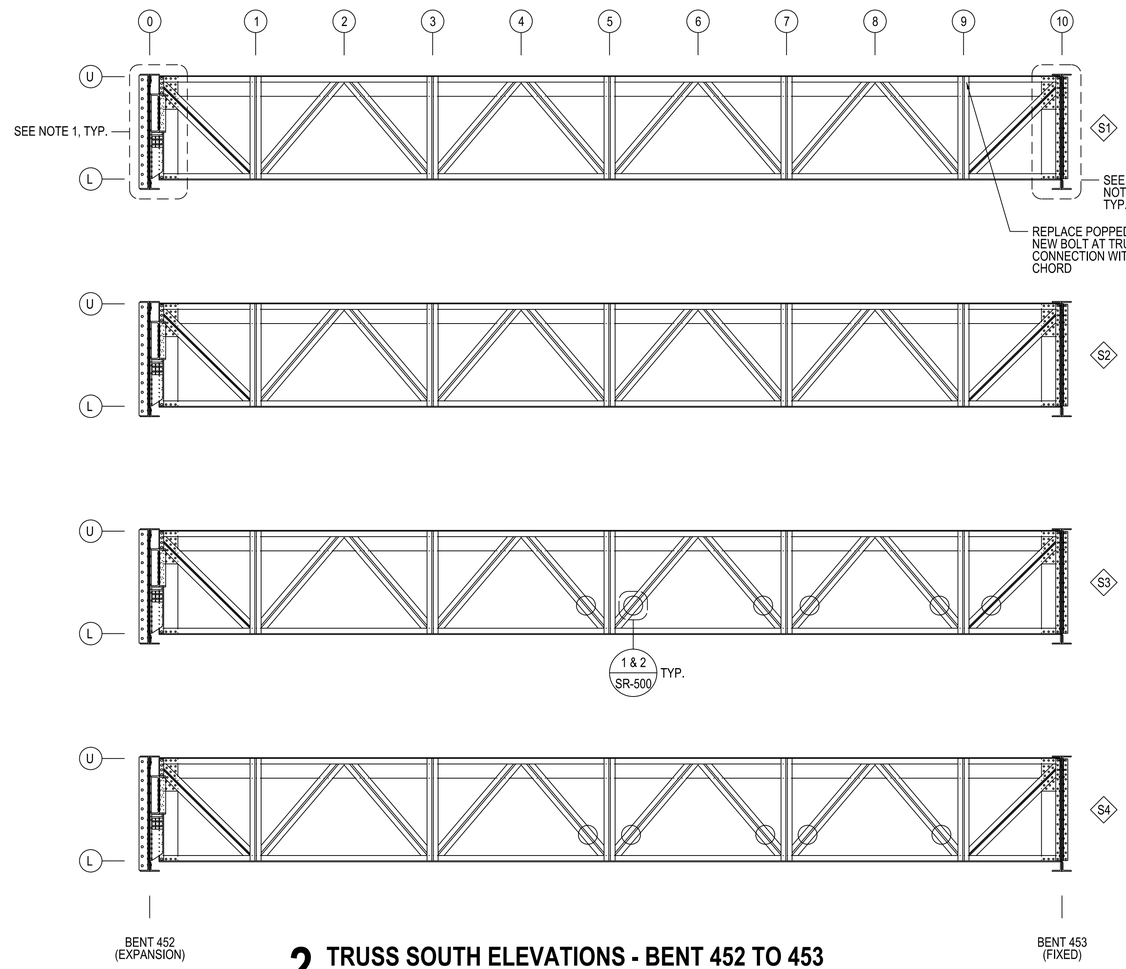

2 TRUSS SOUTH ELEVATIONS - BENT 452 TO 453

1/4" = 1'-0" (LOOKING NORTH)

LEGEND

- (##) PANEL POINT DESIGNATION
- S# TRUSS DESIGNATION
- TRUSS DIAGONAL REPAIR LOCATION

NOTES:

1. BENTS, EXTERIOR LATERAL BRACING MEMBERS AND CONNECTIONS FROM EXISTING TRACK STRINGERS TO BENTS TO BE REMOVED AND REPLACED. SEE SHEETS S-114 TO S-116 AND S-300 TO S-310 FOR ADDITIONAL DETAILS.

DESIGN BY:	BMJ								
DRAWN BY:	NRH	4	7/3/2023	ISSUED FOR BID					
CHECKED BY:	RVV	1	11/4/2022	PERMIT REVISION #1					
APPROVED BY:	WJC	0	9/9/2022	ISSUED FOR PERMIT					
CDOT/APPROVED BY:		NO.	DATE	REVISIONS	DES.	DRW.	CHK.	DCCO	CDOT

TRANSYSTEMS
222 SOUTH RIVERSIDE PLAZA SUITE 610
CHICAGO, ILLINOIS 60606

SKIDMORE, OWINGS & MERRILL LLP
224 SOUTH MICHIGAN AVENUE, SUITE 1000
CHICAGO, ILLINOIS 60604

CHICAGO DEPARTMENT OF TRANSPORTATION
DIVISION OF ENGINEERING

STATE / LAKE LOOP ELEVATED STATION
200 NORTH STATE STREET, CHICAGO, IL 60601

SPEC. NO.

REPAIR PLAN AND ELEVATION 9 (BENT 452-453)

DRAWING NO. SR-108

CDOT PROJECT D-1-209

DATE: 9/9/2022

REVISION NO.

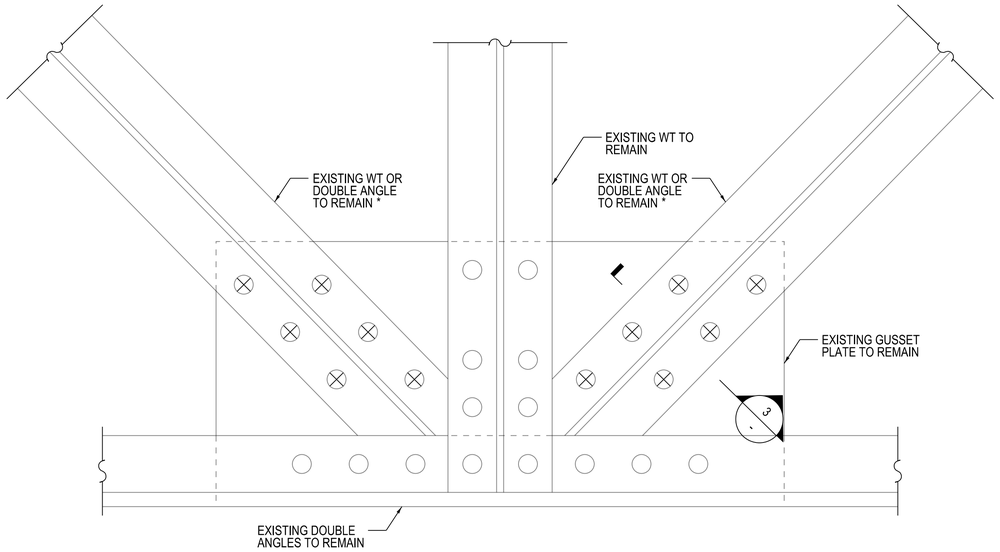

1 EXISTING TRUSS DIAGONAL REPAIR - ELEVATION
NTS

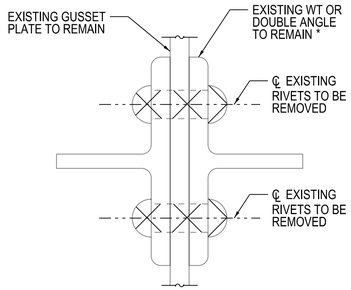

3 EXISTING SECTION THRU GUSSET
NTS

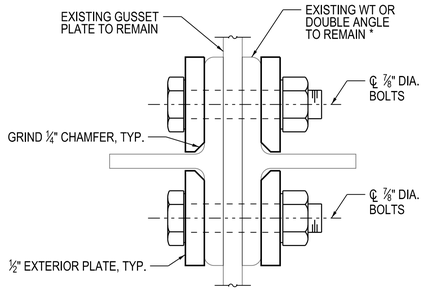

4 PROPOSED SECTION THRU GUSSET
NTS

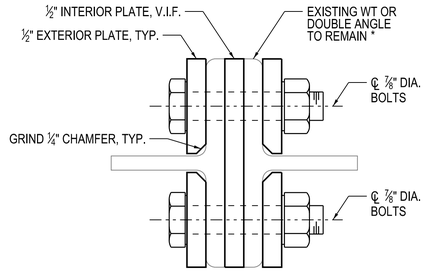

5 PROPOSED SECTION THRU TRUSS DIAGONAL
NTS

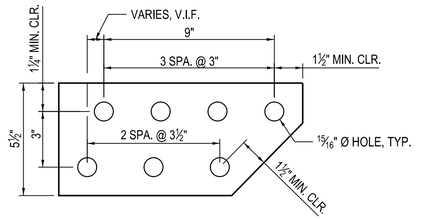

6 INTERIOR PLATE DETAIL
NTS

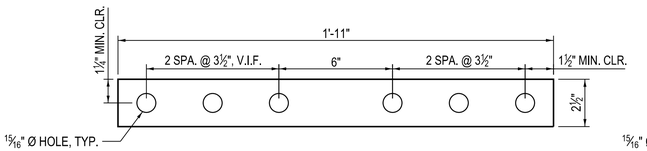

7 EXTERIOR PLATE "A" DETAIL
NTS

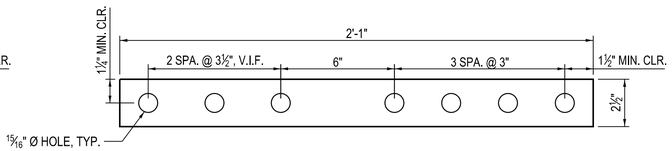

8 EXTERIOR PLATE "B" DETAIL
NTS

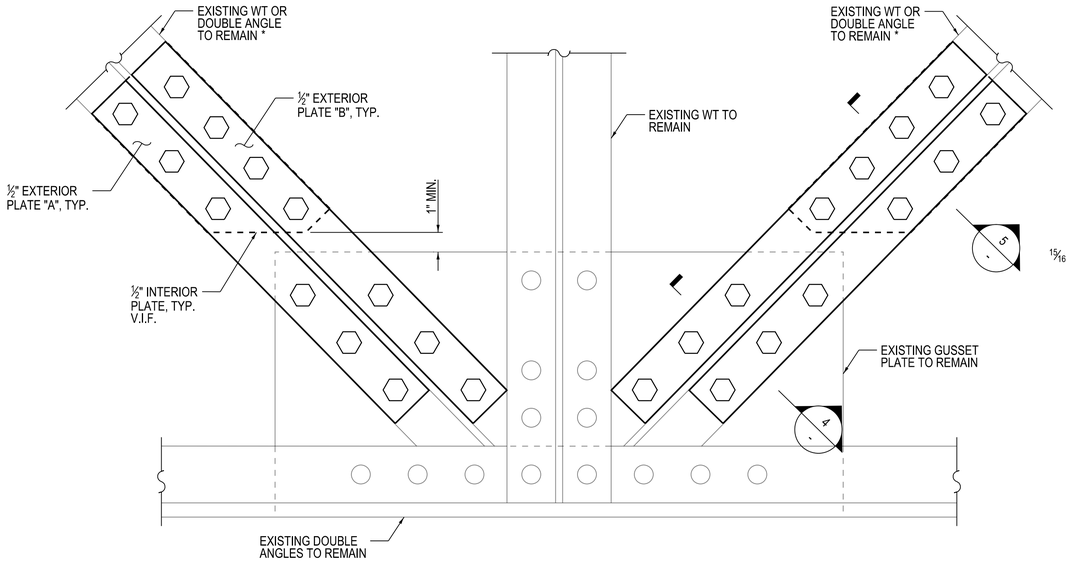

2 PROPOSED TRUSS DIAGONAL REPAIR - ELEVATION
NTS

NOTES:

1. SEE SHEET SR-001 FOR NOTES.
2. ADDITIONAL CROSS-BRACING MEMBERS & RIVETS NOT SHOWN FOR CLARITY.

LEGEND

- EXISTING ⅞" RIVET TO REMAIN
- EXISTING RIVET TO REMOVE
- NEW ⅞" Ø H.S. BOLT
- LIMITS OF MEMBERS TO BE REMOVED
- EXISTING STEEL
- PROPOSED STEEL

* EXISTING DOUBLE ANGLE AT FIRST INTERIOR VERTICAL, WT ALL OTHER LOCATIONS.

DESIGN BY:	BMJ								
DRAWN BY:	NRH	4	7/3/2023	ISSUED FOR BID					
CHECKED BY:	RVV	1	11/4/2022	PERMIT REVISION #1					
APPROVED BY:	WJC	0	9/9/2022	ISSUED FOR PERMIT					
CDOT/APPROVED BY:		NO.	DATE	REVISIONS	DES.	DRW.	CHK.	DCCO	CDOT

TRANSYSTEMS
222 SOUTH RIVERSIDE PLAZA SUITE 610
CHICAGO, ILLINOIS 60606

SKIDMORE, OWINGS & MERRILL LLP
224 SOUTH MICHIGAN AVENUE, SUITE 1000
CHICAGO, ILLINOIS 60604

CHICAGO DEPARTMENT OF TRANSPORTATION
DIVISION OF ENGINEERING

STATE / LAKE LOOP ELEVATED STATION
200 NORTH STATE STREET, CHICAGO, IL 60601

PROPOSED STRUCTURE REPAIRS - 1

CDOT PROJECT D-1-209 | DATE: 9/9/2022

SPEC. NO.

DRAWING NO. SR-500

REVISION NO.

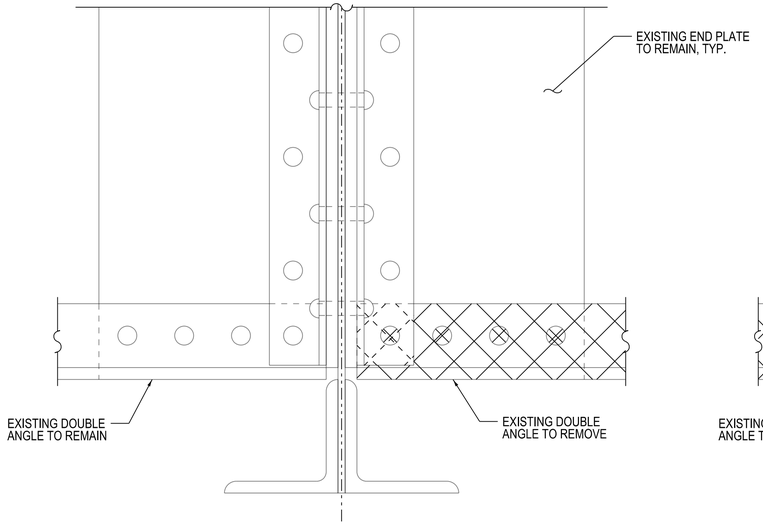

BENT 449 - FIXED

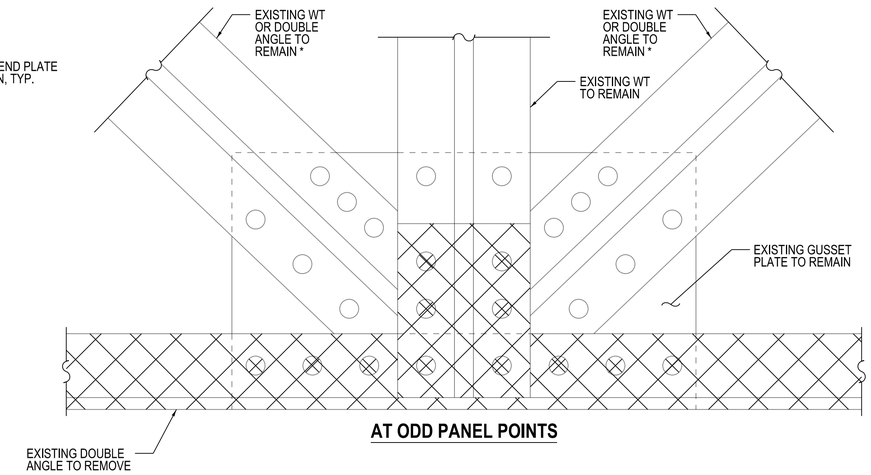

AT ODD PANEL POINTS

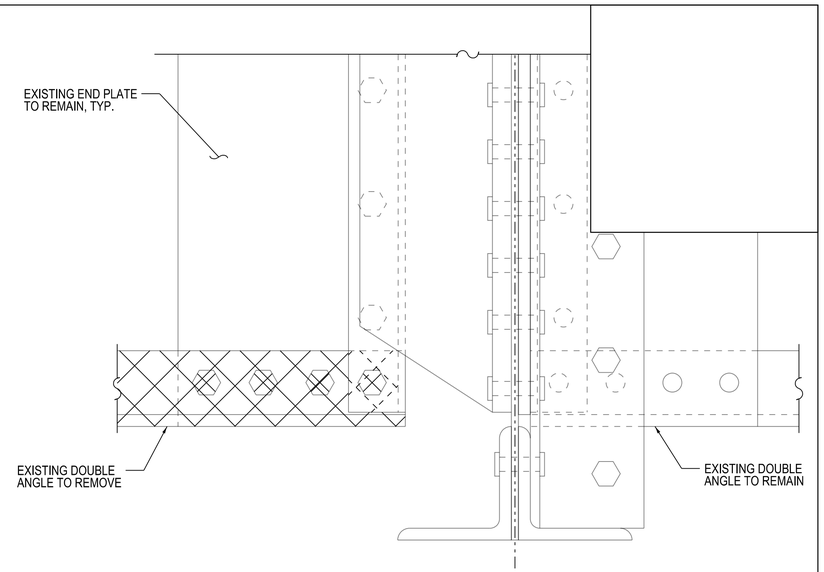

BENT 450 - EXPANSION

1 EXISTING LOWER CHORD REPLACEMENT - ELEVATION
NTS

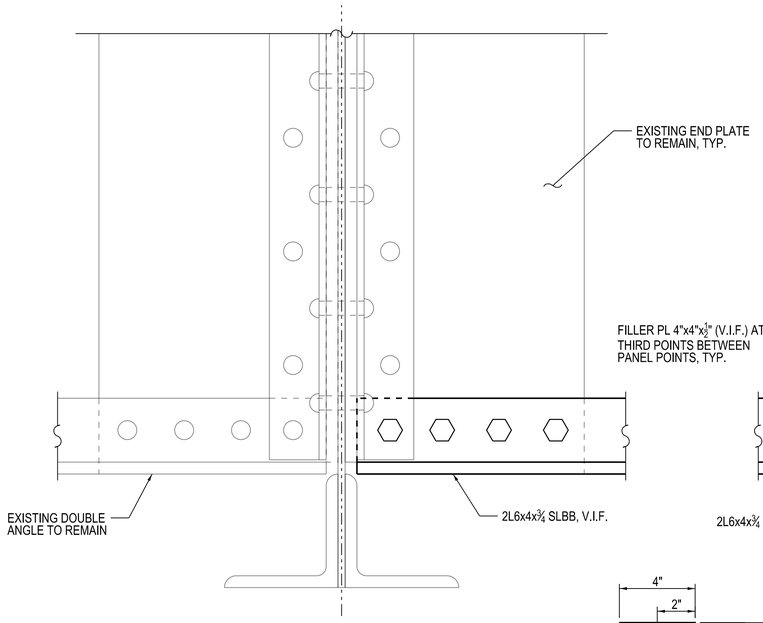

BENT 449 - FIXED

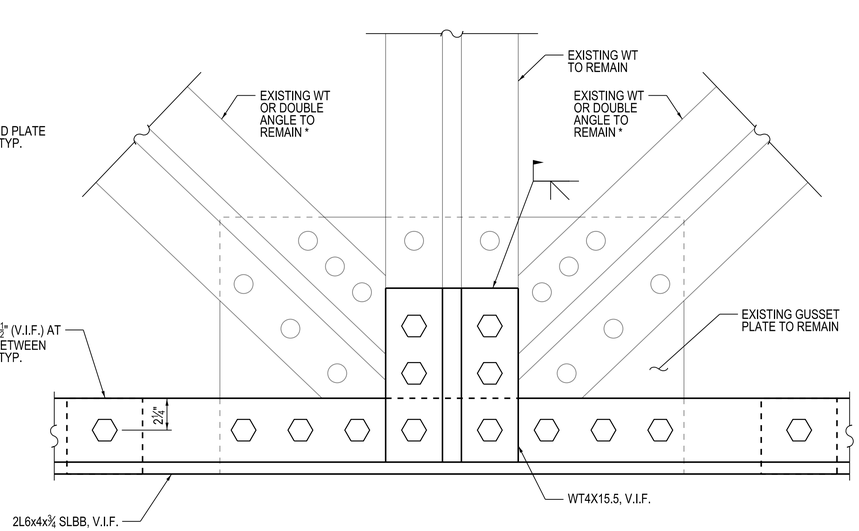

AT ODD PANEL POINTS

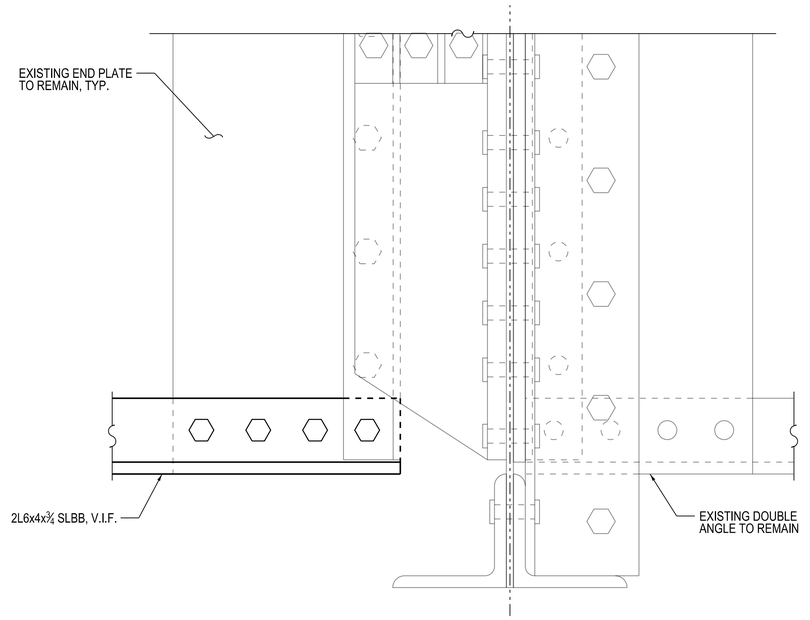

BENT 450 - EXPANSION

2 PROPOSED LOWER CHORD REPLACEMENT - ELEVATION
NTS

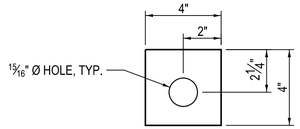

3 FILLER PLATE DETAIL
NTS

NOTES:

1. SEE SHEET SR-001 FOR NOTES.
2. EXISTING BENT SHOWN. SEE SHEETS S-306 TO S-307 FOR PROPOSED BENT DETAILS.

* EXISTING DOUBLE ANGLE AT FIRST INTERIOR VERTICAL, WT ALL OTHER LOCATIONS.

LEGEND

- EXISTING STEEL
- PROPOSED STEEL
- EXISTING ⅞" RIVET TO REMAIN
- EXISTING RIVET TO REMOVE
- EXISTING ⅞" Ø H.S. BOLT TO REMAIN
- EXISTING H.S. BOLT TO REMOVE
- NEW ⅞" Ø H.S. BOLT
- LIMITS OF MEMBERS TO BE REMOVED

DESIGN BY:	BMJ								
DRAWN BY:	NRH	4	7/3/2023	ISSUED FOR BID					
CHECKED BY:	RVV	1	11/4/2022	PERMIT REVISION #1					
APPROVED BY:	WJC	0	9/9/2022	ISSUED FOR PERMIT					
CDOT/APPROVED BY:		NO.	DATE	REVISIONS	DES.	DRW.	CHK.	DCCO	CDOT

TRANSYSTEMS
222 SOUTH RIVERSIDE PLAZA SUITE 610
CHICAGO, ILLINOIS 60606

SKIDMORE, OWINGS & MERRILL LLP
224 SOUTH MICHIGAN AVENUE, SUITE 1000
CHICAGO, ILLINOIS 60604

CHICAGO DEPARTMENT OF TRANSPORTATION
DIVISION OF ENGINEERING

STATE / LAKE LOOP ELEVATED STATION
200 NORTH STATE STREET, CHICAGO, IL 60601

SPEC. NO.

PROPOSED STRUCTURE REPAIRS - 2

DRAWING NO.
SR-501

CDOT PROJECT D-1-209 | DATE: 9/9/2022 | REVISION NO.

NOTES:

1. SEE SHEET SR-001 FOR NOTES.

LEGEND

- LIMITS OF MEMBERS TO BE REMOVED
- EXISTING STEEL
- PROPOSED STEEL
- EXISTING RIVET TO REMOVE
- NEW 7/8" Ø H.S. BOLT

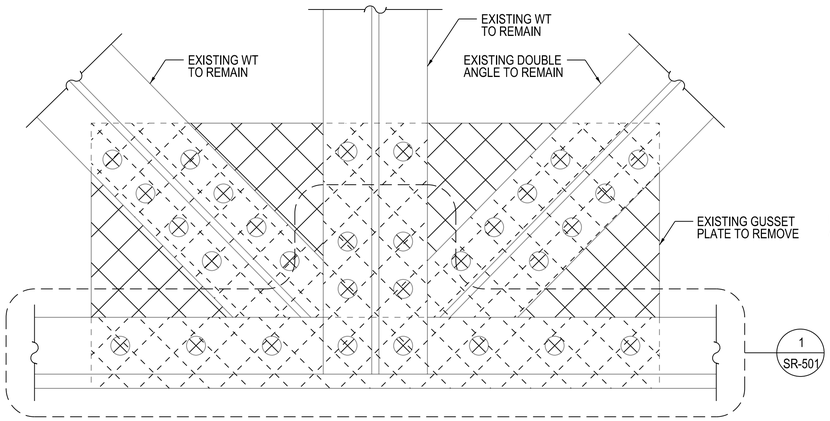

1 EXISTING TYPE 1 GUSSET REPLACEMENT - ELEVATION
NTS

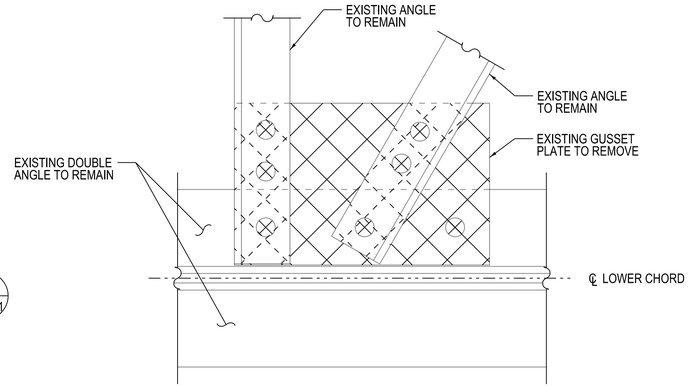

3 EXISTING TYPE 2 GUSSET REPLACEMENT - PLAN
NTS

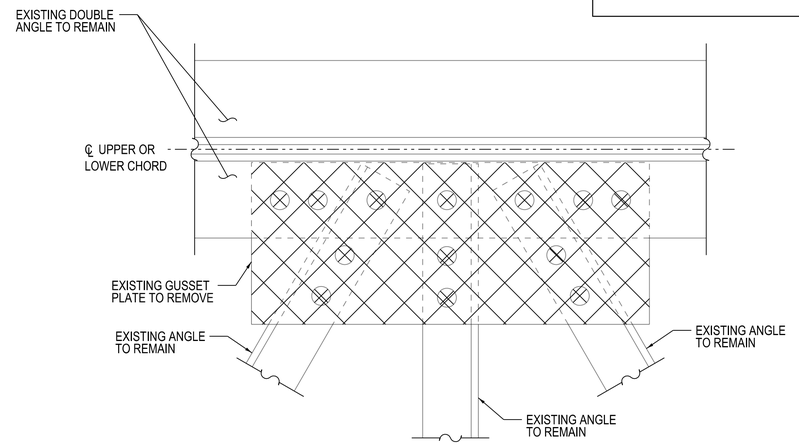

5 EXISTING TYPE 3 GUSSET REPLACEMENT - PLAN
NTS

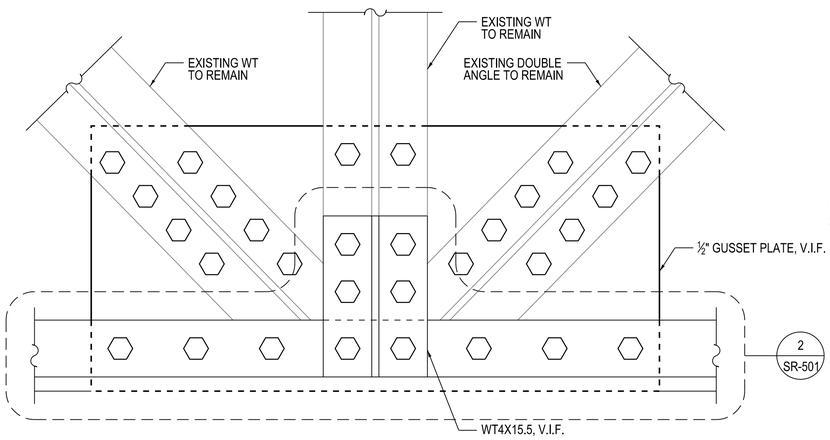

2 PROPOSED TYPE 1 GUSSET REPLACEMENT - ELEVATION
NTS

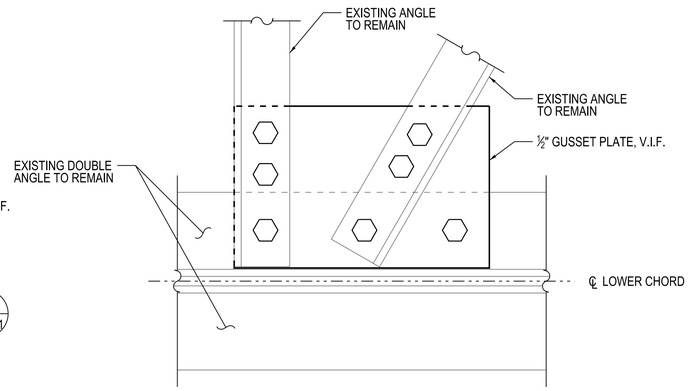

4 PROPOSED TYPE 2 GUSSET REPLACEMENT - PLAN
NTS

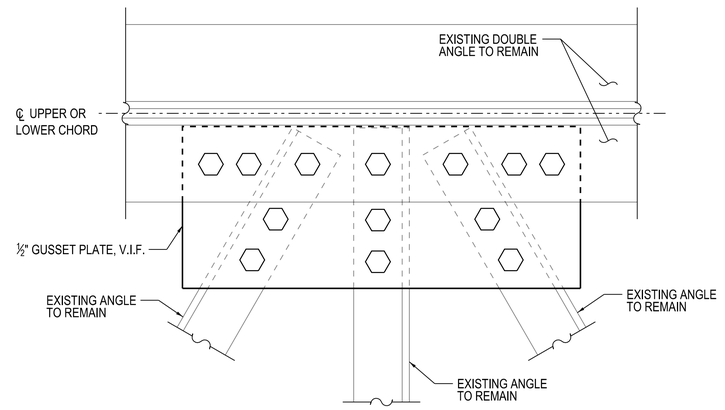

6 PROPOSED TYPE 3 GUSSET REPLACEMENT - PLAN
NTS

DESIGN BY:	BMJ								
DRAWN BY:	NRH	4	7/3/2023	ISSUED FOR BID					
CHECKED BY:	RVV	1	11/4/2022	PERMIT REVISION #1					
APPROVED BY:	WJC	0	9/9/2022	ISSUED FOR PERMIT					
CDOT/APPROVED BY:		NO.	DATE	REVISIONS	DES.	DRW.	CHK.	DCCO	CDOT

TRANSYSTEMS
222 SOUTH RIVERSIDE PLAZA SUITE 610
CHICAGO, ILLINOIS 60606

SKIDMORE, OWINGS & MERRILL LLP
224 SOUTH MICHIGAN AVENUE, SUITE 1000
CHICAGO, ILLINOIS 60604

CHICAGO DEPARTMENT OF TRANSPORTATION
DIVISION OF ENGINEERING

STATE / LAKE LOOP ELEVATED STATION
200 NORTH STATE STREET, CHICAGO, IL 60601

SPEC. NO.

PROPOSED STRUCTURE REPAIRS - 3

DRAWING NO.
SR-502

CDOT PROJECT D-1-209

DATE: 9/9/2022

REVISION NO.

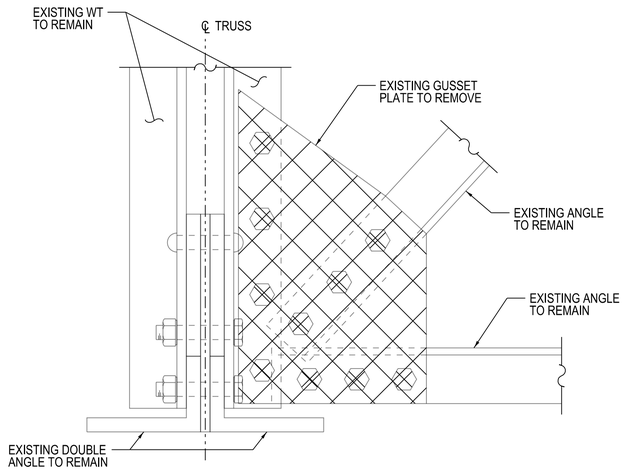

1 EXISTING TYPE 4 GUSSET REPLACEMENT - SECTION
NTS

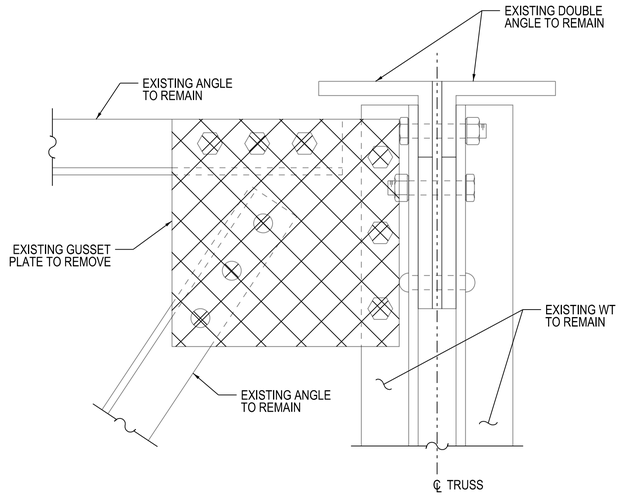

3 EXISTING TYPE 5 GUSSET REPLACEMENT - SECTION
NTS

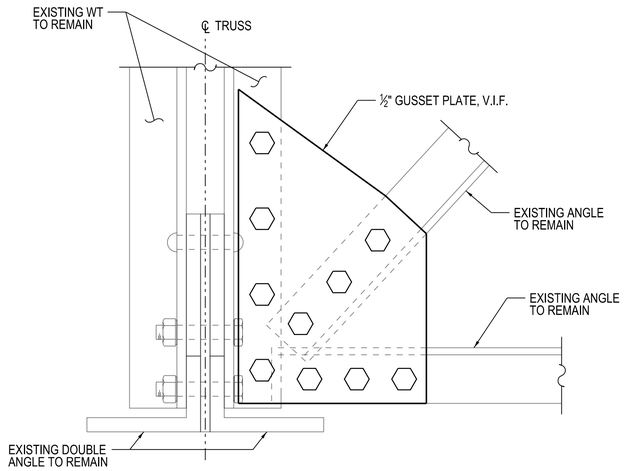

2 PROPOSED TYPE 4 GUSSET REPLACEMENT - SECTION
NTS

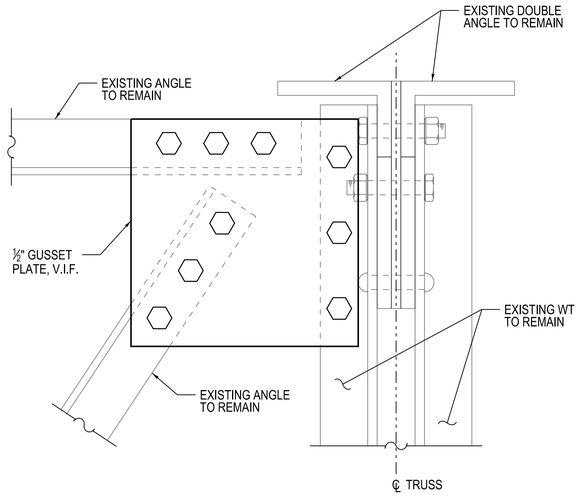

4 PROPOSED TYPE 5 GUSSET REPLACEMENT - SECTION
NTS

LEGEND

- LIMITS OF MEMBERS TO BE REMOVED
- EXISTING STEEL
- PROPOSED STEEL
- EXISTING RIVET TO REMOVE
- EXISTING H.S. BOLT TO REMOVE
- NEW ⅞" Ø H.S. BOLT

NOTES:

1. SEE SHEET SR-001 FOR NOTES.

DESIGN BY:	BMJ								
DRAWN BY:	NRH	4	7/3/2023	ISSUED FOR BID					
CHECKED BY:	RVV	1	11/4/2022	PERMIT REVISION #1					
APPROVED BY:	WJC	0	9/9/2022	ISSUED FOR PERMIT					
CDOT/APPROVED BY:		NO.	DATE	REVISIONS	DES.	DRW.	CHK.	DCCO	CDOT

TRANSYSTEMS
222 SOUTH RIVERSIDE PLAZA SUITE 610
CHICAGO, ILLINOIS 60606

SKIDMORE, OWINGS & MERRILL LLP
224 SOUTH MICHIGAN AVENUE, SUITE 1000
CHICAGO, ILLINOIS 60604

CHICAGO DEPARTMENT OF TRANSPORTATION
DIVISION OF ENGINEERING

STATE / LAKE LOOP ELEVATED STATION
200 NORTH STATE STREET, CHICAGO, IL 60601

PROPOSED STRUCTURE REPAIRS - 4

CDOT PROJECT D-1-209 | DATE: 9/9/2022

SPEC. NO.

DRAWING NO. SR-503

REVISION NO.

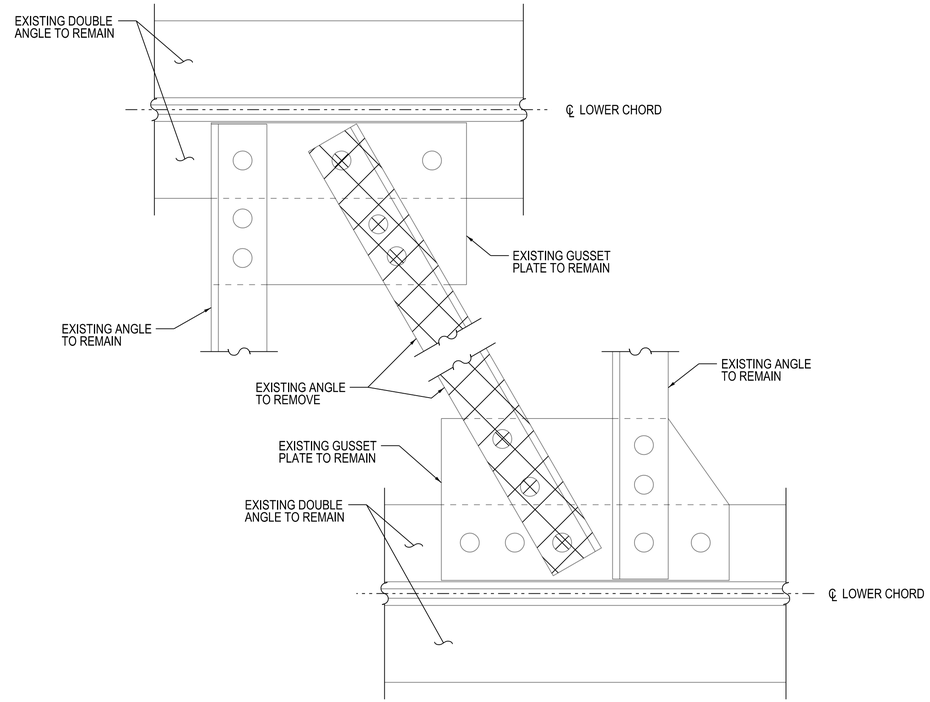

1 EXISTING LATERAL BRACE REPLACEMENT - PLAN
NTS

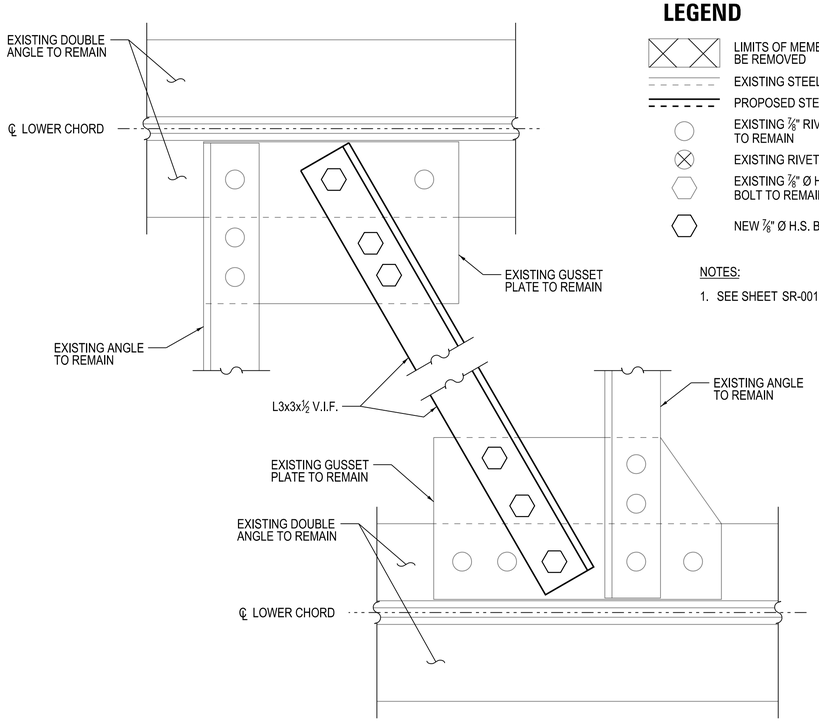

2 PROPOSED LATERAL BRACE REPLACEMENT - PLAN
NTS

LEGEND

- LIMITS OF MEMBERS TO BE REMOVED
- EXISTING STEEL
- PROPOSED STEEL
- EXISTING ⅞" RIVET TO REMAIN
- EXISTING RIVET TO REMOVE
- EXISTING ⅞" Ø H.S. BOLT TO REMAIN
- NEW ⅞" Ø H.S. BOLT

NOTES:

1. SEE SHEET SR-001 FOR NOTES.

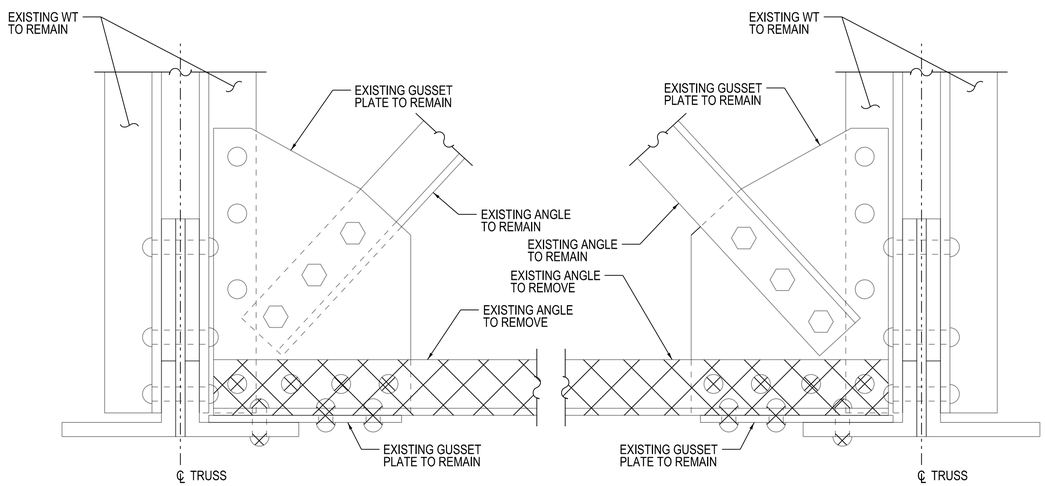

3 EXISTING CROSS BRACE REPLACEMENT - SECTION
NTS

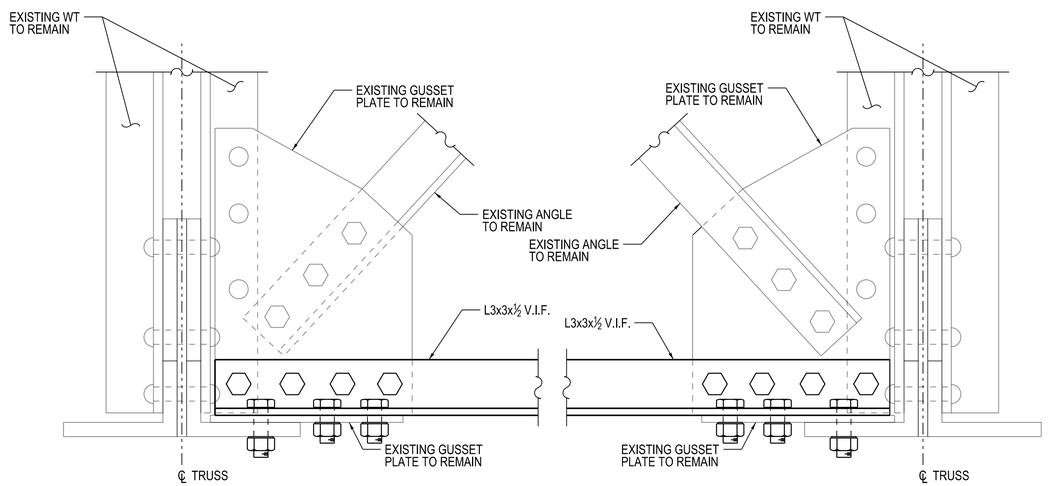

4 PROPOSED CROSS BRACE REPLACEMENT - SECTION
NTS

DESIGN BY:	BMJ								
DRAWN BY:	NRH	4	7/3/2023	ISSUED FOR BID					
CHECKED BY:	RVV	1	11/4/2022	PERMIT REVISION #1					
APPROVED BY:	WJC	0	9/9/2022	ISSUED FOR PERMIT					
CDOT/APPROVED BY:		NO.	DATE	REVISIONS	DES.	DRW.	CHK.	DCCO	CDOT

TRANSYSTEMS
222 SOUTH RIVERSIDE PLAZA SUITE 610
CHICAGO, ILLINOIS 60606

SKIDMORE, OWINGS & MERRILL LLP
224 SOUTH MICHIGAN AVENUE, SUITE 1000
CHICAGO, ILLINOIS 60604

CHICAGO DEPARTMENT OF TRANSPORTATION
DIVISION OF ENGINEERING

STATE / LAKE LOOP ELEVATED STATION
200 NORTH STATE STREET, CHICAGO, IL 60601

PROPOSED STRUCTURE REPAIRS - 5

CDOT PROJECT D-1-209

DATE: 9/9/2022

SPEC. NO.

DRAWING NO. SR-504

REVISION NO.

GENERAL REQUIREMENTS:

1. THE GENERAL STRUCTURAL NOTES ARE INTENDED TO AUGMENT THE DRAWINGS AND SPECIFICATIONS. SHOULD CONFLICTS EXIST BETWEEN THE DRAWINGS, SPECIFICATIONS AND THE STRUCTURAL NOTES, THE STRICTEST PROVISION GOVERNS.
2. THE STRUCTURES ARE DESIGNED TO BE SELF-SUPPORTING AND STABLE AFTER THE BUILDING IS FULLY COMPLETED. IT IS THE CONTRACTOR'S SOLE RESPONSIBILITY TO DETERMINE ERECTION PROCEDURE AND SEQUENCE, TO ENSURE THE SAFETY OF THE BUILDING AND ITS COMPONENT PARTS DURING ERECTION, AND TO PROVIDE TEMPORARY BRACING, GUYS, OR TIE-DOWNS AS NECESSARY FOR COMPLETION OF THE WORK. SUCH MATERIAL REMAINS THE CONTRACTOR'S PROPERTY AFTER COMPLETION OF THE WORK.
3. FOLLOW ALL APPLICABLE SAFETY CODES AND REGULATIONS DURING ALL PHASES OF CONSTRUCTION.
4. ALL CONDITIONS AND DIMENSIONS PERTAINING TO EXISTING UTILITIES AND CONSTRUCTION AT THE SITE MUST BE VERIFIED BY THE CONTRACTOR BEFORE PROCEEDING WITH THE WORK. THIS ASSESSMENT MUST BE CONDUCTED SUFFICIENTLY IN ADVANCE OF ANY PHASE OF CONSTRUCTION, TO THE MAXIMUM EXTENT POSSIBLE, TO AVOID DELAYS IN THE WORK.
5. EQUIPMENT WEIGHTS AND STRUCTURAL ITEMS IN ANY WAY RELATED TO THE SUPPORT OF EQUIPMENT OR OPENINGS ARE INDICATED FOR INFORMATIONAL PURPOSES ONLY. VERIFY AND COORDINATE SIZE, LOCATION AND QUANTITY OF OPENINGS AND EQUIPMENT WEIGHTS REQUIRED FOR ARCHITECTURAL, MECHANICAL, ELECTRICAL AND ALL OTHER TRADES. OBTAIN APPROVAL OF AFFECTED TRADES BEFORE PROCEEDING WITH SUCH PORTION OF THE WORK. CHANGES REQUIRED BY EQUIPMENT IN EXCESS OF THE WEIGHT OR GEOMETRIC ALLOWANCES ARE THE CONTRACTOR'S RESPONSIBILITY.
6. IN GENERAL, ALL SECTIONS AND DETAILS SHOWN ON THE PLANS ARE INTENDED TO APPLY TO SIMILAR CONDITIONS, UNLESS SPECIFICALLY NOTED. DETAILS LABELED "TYPICAL" APPLY AT ALL SITUATIONS THAT ARE THE SAME OR SIMILAR TO THOSE SPECIFICALLY DETAILED. SUCH DETAILS APPLY WHETHER OR NOT THEY ARE KEYED AT EACH LOCATION.
7. SEE ARCHITECTURAL, MECHANICAL, ELECTRICAL AND ALL OTHER TRADE REQUIREMENTS FOR EMBEDDED ITEMS NOT SHOWN HEREIN AND TO VERIFY SIZE AND LOCATION OF ALL OPENINGS.
8. NO CORE DRILLING IS ALLOWED WITHOUT APPROVAL OF THE COMMISSIONER. BEFORE CORE DRILLING ANY HOLES, LOCATE THE REINFORCING STEEL IN EXISTING CONCRETE WITH A REINFORCING DETECTOR. RELOCATE THE HOLE TO AVOID CUTTING ANY REINFORCING. DO NOT DRILL HOLES THROUGH EXISTING REINFORCING UNLESS ACCEPTABLE TO THE COMMISSIONER. DO NOT OVERCUT ANY HOLES.
9. COMMISSIONER IS NOT RESPONSIBLE FOR THE MEANS, METHODS, TECHNIQUES, SEQUENCES OR PROCEDURES OF CONSTRUCTION SELECTED BY CONTRACTOR.
10. TRANSYSTEMS IS NOT RESPONSIBLE FOR CONDITIONS OF THE JOB SITE INCLUDING SAFETY OF ALL PERSONS AND PROPERTY DURING PERFORMANCE OF THE WORK. THIS REQUIREMENT WILL APPLY CONTINUOUSLY AND IS NOT LIMITED TO NORMAL WORKING HOURS.
11. DO NOT SCALE DRAWINGS.
12. RERERENCE SHEET SS-500 FOR REQUIRED TEMPORARY SOIL RETENTION SYSTEM (TSRS). THIS SHEET SHOWS THE SCHEMATIC LAYOUT OF THE RETENSION SYSTEM HOWEVER THE CONTRACTOR IS RESPONSIBLE FOR FINAL ENGINEERING CALCULATIONS, LAYOUT AND DETAILS.
13. CONTRACTOR IS TO VERIFY ALL DIMENSIONS AND CONDITIONS IN FIELD PRIOR TO FABRICATION AND CONSTRUCTION. ALL DIMENSIONS AND CONDITIONS TYING INTO OR GOVERNED BY EXISTING CONSTRUCTION ARE APPROXIMATE AND ARE NOT CLAIMED TO BE COMPLETELY ACCURATE. ALL SUCH CONDITIONS AND DIMENSIONS MUST BE FIELD VERIFIED BY THE CONTRACTOR PRIOR TO THE PREPARATION OF SHOP DRAWINGS. IF CONDITIONS AND/OR DIMENSIONS VARY FROM THOSE SHOWN, THE CONTRACTOR MUST NOTIFY THE ARCHITECT AND/OR COMMISSIONER PRIOR TO SHOP DRAWING PREPARATION. FAILURE TO REPORT SUCH DISCREPANCIES INDICATES THE SUBCONTRACTOR'S AND GENERAL CONTRACTOR'S ACCEPTANCE OF SUCH CONDITIONS.
14. IT'S THE CONTRACTOR RESPONSIBILITY TO INSPECT AND ENSURE THAT ALL STRUCTURAL WORK IS IN CONFORMANCE WITH THE CONTRACT DOCUMENTS. ANY STRUCTURAL INSPECTION/OBSERVATION PROVIDED BY OTHERS (INCLUDING THE COMMISSIONER) DOES NOT BELIEVE THE CONTRACTOR OF THIS RESPONSIBILITY. ANY STRUCTURAL DEVIATIONS FROM THE CONTRACT DOCUMENTS THAT ARE FOUND AT A LATER DATE AND ARE DECLARED TO BE SIGNIFICANT BY THE COMMISSIONER MUST BE CORRECTED BY THE CONTRACTOR (AT THE CONTRACTOR'S EXPENSE). ANY INDIVIDUAL PERFORMING STRUCTURAL INSPECTION/OBSERVATION IS NOT AUTHORIZED TO DIRECT OR APPROVE ANY CHANGES FROM THE CONTRACT DOCUMENT.
15. DO NOT PLACE CONSTRUCTION MATERIALS AND/OR EQUIPMENT ON THE STRUCTURE SUCH THAT THE DESIGN LIVE LOAD IS EXCEEDED.
16. EACH SUBCONTRACTOR SHALL VERIFY ALL DIMENSIONS AND CONDITIONS RELATING TO HIS WORK BEFORE BEGINNING CONSTRUCTION. ANY DISCREPANCIES SHALL BE REPORTED TO THE CONTRACTOR IMMEDIATELY. FAILURE TO REPORT SUCH DISCREPANCIES INDICATES THE SUBCONTRACTOR'S ACCEPTANCE OF SUCH CONDITIONS.

DESIGN LOAD CRITERIA:

1. REFERENCE STANDARDS:
   CBC-19 2019 CHICAGO BUILDING CODE WITH MAY 2020 SUPPLEMENT
   ASCE 7, MINIMUM DESIGN LOADS FOR BUILDINGS AND OTHER STRUCTURES, 2016. REFER TO PLANS FOR ADDITIONAL LOAD INFORMATION.
2. ALL LOADS AND REACTIONS ON DRAWINGS AND IN THESE GENERAL STRUCTURAL NOTES ARE SERVICE LOADS (ASD), UNLESS SPECIFICALLY NOTED AS ULTIMATE LOADS (ULT). LOAD CASES WHICH INCLUDE COMBINED LOADS SHALL BE CALCULATED IN ACCORDANCE WITH THE REFERENCED BUILDING CODE.
3. LOADS:
   DEAD LOADS (ASD):
   THE SELF WEIGHT OF EACH STRUCTURAL ELEMENT AND THE FOLLOWING SUPERIMPOSED LOADS.
   MECHANICAL, ELECTRICAL AND LIGHTING AT PARKING AREA - 5 PSF
   MECHANICAL, ELECTRICAL, LIGHTING AND CEILING AT OFFICES AND PUBLIC AREAS - 20 PSF

   LIVE LOADS (ASD):

PUBLIC AREAS, LOBBIES & STAIRS	100 PSF
CORRIDORS	100 PSF
LIGHT STORAGE	125 PSF
MECHANICAL ROOM	125 PSF
PAVEMENT/STREET	250 PSF

4. WIND DESIGN CRITERIA (ULT):

BASIC WIND SPEED,	V_{ULT} = 114 MPH
VELOCITY PRESSURE,	qh = 20.2 PSF
WIND EXPOSURE CATEGORY	B
COMPONENTS AND CLADDING	qh = 25 PSF
ENCLOSURE CLASSIFICATION	ENCLOSED
INTERNAL PRESSURE COEFFICIENT	0.85

5. SNOW LOADS (ASD):

GROUND SNOW LOAD, Pg	25 PSF
ROOF SNOW LOAD, Pf	20 PSF
FOR DRIFT AND ROOF SNOW LOAD CALCULATIONS	
EXPOSURE FACTOR, Ce	1.0
IMPORTANCE FACTOR, Is	1.0
THERMAL FACTOR, Ct	1.1

6. SEISMIC DESIGN CRITERIA (ULT):

SEISMIC IMPORTANCE FACTOR, Ie	1.25
MAPPED SPECTRAL RESPONSE ACCELERATIONS:	
SHORT PERIOD, Ss	0.125
1 SEC. PERIOD, S1	0.066
RISK CATEGORY	III
DESIGN SPECTRAL RESPONSE COEFFICIENT	
Sds	0.2
Sd1	0.185
SITE CLASS	E
BASIC STRUCTURAL SYSTEM - BUILDING FRAME	
ANALYSIS PROCEDURE	EQUIVILENT LATERAL FORCE
SEISMIC FORCE RESISTING SYSTEM - ORDINARY REINFORCED	CONCRETE SHEAR WALLS
SEISMIC DESIGN CATEGORY	C
RESPONSE MODIFICATION FACTOR, R	5
OVERSTRENGTH COEFFICIENT, Ω_0	2.5
DEFLECTION AMPLIFICATION FACTOR, Cd	4.5
SEISMIC RESPONSE COEFFICIENT, Cs	0.05

7. SPECIAL LOADS:
   A. INTERIOR WALLS AND PARTITIONS - 5 PSF HORIZONTAL LIVE LOAD
   B. HANDRAILS AND GUARDRAILS:
      1. HANDRAIL AND GUARDRAIL TOP RAIL - 200 POUNDS CONCENTRATED LOAD AT ANY POINT IN ANY DIRECTION OR 50 PLF UNIFORM LOAD APPLIED IN ANY DIRECTION
      2. INTERMEDIATE RAILS, BALUSTERS AND PANEL FILERS - HORIZONTALLY APPLIED NORMAL LOAD OF 50 POUNDS ON AN AREA NOT TO EXCEED 1 SQUARE FT., INCLUDING OPENINGS AND SPACE BETWEEN RAILS.
   C. CONNECTIONS FOR SUPPORTED EQUIPMENT, FASCIA AND OTHER NON-STRUCTURAL ITEMS MUST BE DESIGNED TO ACCOUNT FOR UNEXPECTED ECCENTRICITIES IN THE LOADED PARTS AND RESULTING PRYING EFFECTS. CONNECTIONS WHICH RELY ON MULTIPLE FASTENERS AT ONE LOCATION MUST TAKE INTO ACCOUNT THE STIFFNESS OF THE CONNECTED ELEMENTS AND THEIR ABILITY TO REDISTRIBUTE LOADS TO OTHER ANCHORS IN THE EVENT OF FASTENER YIELD OR SLIP.
   D. ALL ANCHORS EMBEDDED IN CONCRETE OR MASONRY MUST BE SHOWN TO BE IN COMPLIANCE WITH ACI 318-14.
8. LATERAL LOAD RESISTING SYSTEM:
   THE LATERAL LOAD RESISTING SYSTEM CONSISTS OF THE FOLLOWING ELEMENTS:
   A. CONCRETE FLOOR DIAPHRAGM THROUGHOUT.
   B. CONCRETE SHEAR WALLS THROUGHOUT.
9. IT IS THE OWNER'S RESPONSIBILITY TO POST LIVE LOADS PER THE CBC.

FOUNDATIONS:

1. FOUNDATIONS HAVE BEEN DESIGNED IN ACCORDANCE WITH THE RECOMMENDATIONS PROVIDED IN THE PROJECT-SPECIFIC GEOTECHNICAL ENGINEERING STUDY PERFORMED BY GSG CONSULTANTS, INC.; DATED DECEMBER 3, 2021; TITLED: REPLACEMENT OF THE STATE/ LAKE LOOP ELEVATED CTA STATION, CHICAGO ILLINOIS.
2. CONTROLLED LOW STRENGTH MATERIAL (CLSM) SHALL BE USED AS BACKFILL FOR THE SUBWAY CONSTRUCTION. THE UNIT WEIGHT SHALL BE 120 PCF OR LESS AND f'c=100 PSI MINIMUM. THE MATERIAL SHALL MEET REQUIREMENTS AS STATED IN CDOT STANDARD INCLUDING 4.2 AND THE REFERENCED IDOT REQUIREMENTS AS STATED IN 1019 AND 593. THE MATERIAL SHALL BE EXCAVATABLE.
   A. EQUIVALENT LATERAL PRESSURE 35 PCF
   B. MAXIMUM LIFT 4'-0"
3. CONTRACTOR MUST FOLLOW RECOMMENDATIONS CONTAINED WITHIN THE GEOTECHNICAL REPORT IN PREPARATION OF THE SITE, UNDERSLAB SUB-GRADE, BACKFILL AND BUILDING FOUNDATIONS SUBGRADES.
   A. FILL MUST BE PLACED IN LOOSE HORIZONTAL LIFTS OF NOT MORE THAN 8 INCHES THICK.
   B. SUBGRADE AND STONE CAPILLARY FILL MUST BE COMPACTED TO 95% MAXIMUM DRY DENSITY IN ACCORDANCE WITH ASTM D-1557.
   C. COMPACT ALL SUBGRADE WITHIN 10 FEET OF THE BUILDING FOOTPRINT.
4. PRIOR TO ANY EXCAVATION OPERATIONS, THE CONTRACTOR IS RESPONSIBLE FOR LOCATING ALL UNDERGROUND UTILITIES OR OTHER SUBSURFACE STRUCTURES WITHIN THE AREA TO BE EXCAVATED.
5. ALL EXCAVATIONS WITHIN 2 FEET OF EXISTING STRUCTURES TO REMAIN MUST BE REMOVED BY HAND. THE CONTRACTOR IS SOLELY RESPONSIBLE FOR TAKING ADEQUATE PRECAUTIONS NOT TO DAMAGE THE EXISTING INFRASTRUCTURE DURING ALL EXCAVATION, FILL AND COMPACTION OPERATIONS.
6. IN TIGHTLY CONFINED AREAS, A LIGHTWEIGHT VIBRATORY SLED, WEIGHING BETWEEN 500 AND 2,000 POUNDS MAY BE SUBSTITUTED FOR THE DRUM ROLLER COMPACTOR. THE DENSIFICATION REQUIREMENTS REMAIN THE SAME.
7. DENSITY TESTING MUST BE CONDUCTED IN ACCORDANCE WITH THE SPECIFICATIONS.
8. PROOF ROLL IN ACCORDANCE WITH THE SPECIFICATIONS.
9. STORMWATER MUST BE DIVERTED FROM OPEN EXCAVATIONS. MOISTURE CONTROL OF SOILS MUST BE MAINTAINED PER GEOTECHNICAL RECOMMENDATIONS. FOUNDATION EXCAVATIONS MUST BE KEPT FREE OF LOOSE MATERIAL AND STANDING WATER.
10. SUBGRADE DESIGN PARAMETERS AT UPPER MEZZANINE SLAB, NORTH CORRIDOR:
    A. NET ALLOWABLE BEARING PRESSURE 1,000 PSF
    B. MODULUS OF SUBGRADE 50 PSI/IIN
    C. REFERENCE GEOTECHNICAL REPORT FOR REQUIREMENTS FOR BELOW SLAB REQUIREMENTS.
11. ANCHOR RODS/BOLTS AND FOUNDATION DOWELS MUST NOT BE REPAIRED, REPLACED OR FIELD MODIFIED WITHOUT THE WRITTEN APPROVAL OF THE STRUCTURAL COMMISSIONER.
12. NO PIPES, DUCTS, SLEEVES, CHASES ARE TO BE PLACED IN FOUNDATIONS, OR ANY MEMBER CUT FOR PIPES, DUCTS UNLESS SHOWN ON THE DRAWINGS. THE CONTRACTOR MUST OBTAIN APPROVAL BEFORE INSTALLING ANY PIPES, SLEEVES, ETC. THROUGH STRUCTURAL MEMBERS.
13. A TEMPORARY SOIL RETENTION SYSTEM (TSRS) IS REQUIRED FOR THE EXECUTION OF THIS PROJECT. THE CONTRACTOR SHALL BE RESPONSIBLE FOR THE FINAL DESIGN OF THIS SYSTEM. A SCHEMATIC LAYOUT IS SHOWN ON SS-500 THRU SS-502. THE CONTRACTOR SHALL SUBMIT CALCULATIONS AND DRAWINGS OF THE TSRS SIGNED AND SEALED BY A STRUCTURAL ENGINEER LICENSED IN THE STATE OF ILLINOIS FOR REVIEW AND ACCEPTANCE BY THE COMMISSIONER. THE LAYOUT SHALL ACCOMMODATE PHASING OF CONSTRUCTION AND TRAFFIC AS NOTED THROUGHOUT THE CONSTRUCTION DOCUMENTS.
14. REFERENCE GEOTECHNICAL REPORT FOR GROUND WATER TABLE CONDITIONS AND ELEVATIONS.

MICRO-PILE:

1. FOUNDATIONS HAVE BEEN DESIGNED IN ACCORDANCE WITH THE RECOMMENDATIONS PROVIDED IN THE PROJECT-SPECIFIC GEOTECHNICAL ENGINEERING STUDY PERFORMED BY GSG CONSULTANTS, INC.; DATED DECEMBER 3, 2021; TITLED: REPLACEMENT OF THE STATE/ LAKE LOOP ELEVATED CTA STATION, CHICAGO ILLINOIS.
2. THE COMPLETE DESIGN OF THE MICROPILE DESIGN SHALL BE THE RESPONSIBILITY OF THE CONTRACTOR. THE DESIGN SHALL SUPPORT THE WORKING LOADS STATED IN THIS SECTION. GEOTECHNICAL REPORT SPECIFIES ALLOWABLE BEARING CAPACITY OF 200 KSF. REFERENCE THE GEOTECHNICAL REPORT FOR SOIL PARAMETERS. MICROPILE DESIGN SHALL MEET REQUIREMENTS OF CHAPTER 18 OF THE CHICAGO BUILDING CODE. A SCHEMATIC DESIGN IS PROVIDED ON SS-012. REFERENCE SPECIFICATIONS FOR ADDITIONAL REQUIREMENTS. THE CONTRACTOR SHALL PROVIDE CALCULATIONS AND DRAWINGS SIGNED AND SEALED BY A STRUCTURAL ENGINEER LICENSED IN THE STATE OF ILLINOIS FOR REVIEW AND ACCEPTANCE BY THE COMMISSIONER.
3. PILE SPLICES SHALL DEVELOP THE NOMINAL STRENGTH OF THE MICROPILE AND SHALL BE DESIGNED TO RESIST THE AXIAL AND SHEAR FORCES AND MOMENTS OCCURING AT THE LOCATION OF THE SPLICE DURING DRIVING AND FOR DESIGN LOAD COMBINATIONS. DO NOT SPLICE IN THE UPPER 20 FEET OF THE PILE.

MICRO-PILE CONT.:

4. PILE FOUNDATION DESIGN LOADS ARE:
   AXIAL (COMPRESSION) = 250 KIPS / PILE (SERVICE LOAD)
   AXIAL UPLIFT = 30 KIPS/PILE (SERVICE LOAD)
   MAXIMUM PILE DEFLECTION = 0.25 INCHES
   MAXIMUM ALLOWABLE SETTLEMENT = 0.5 INCHES
5. PILES SHALL BE SPACED NO CLOSER THAN 3'-0" ON CENTER.
6. PROVIDE A MINIMUM OF 1 VERIFICATION LOAD TEST PILE TO BE INSTALLED WITHIN FACILITY FOOTPRINT. THE LOCATION OF THE TEST PILE SHOULD BE SELECTED BY THE GEOTECHNICAL ENGINEER WITH INPUT FROM THE CONTRACTOR. THE TEST PILE MAY BE INSTALLED AT A PRODUCTION PILE LOCATION. PERFORM VERIFICATION LOAD TEST PILE PRIOR TO INSTALLATION OF ANY OTHER PRODUCTION PILES.
7. TESTING SHOULD BE CONDUCTED ON TEST PILE IN ACCORDANCE WITH THE PROVISIONS IN THE SPECIFICATIONS.
8. FILL PILE WITH 5000 PSI GROUT AND REINFORCING BAR, Fy=150 KSI.
9. ALL LATERAL LOADS ARE RESISTED BY BATTERED PILES.
10. ALL MICROPILES WITHIN 25 FEET OF NEIGHBORING STRUCTURES AND EXISTING UTILITIES SHALL BE PRE-AUGERED DOWN TO A MINIMUM DEPTH OF 20 FEET OR THE LOWEST LEVEL OF THE ADJACENT STRUCTURE, WHICHEVER IS DEEPER. THE PILE INSTALLER SHALL SUBMIT A VIBRATION CONTROL AND MONITORING PLAN TO THE COMMISSIONER PRIOR TO THE START OF CONSTRUCTION.
11. OBSTRUCTIONS TO THE MICROPILE DRILLING PROCEDURES ARE ANTICIPATED TO BE ENCOUNTERED. PRE-AUGERING THROUGH FILL OR EXCAVATION TO REMOVE THE OBSTRUCTION SHOULD BE PERFORMED AS NECESSARY TO FACILITATE PILE INSTALLATION.
12. REFERENCE SPECIFICATIONS FOR ADDITIONAL REQUIREMENTS AND INFORMATION.
13. BATTERED PILES SHALL BE PROVIDED TO MISS EXISTING STRUCTURES THAT CNANOT BE DEMOLISHED OR REMOVED.

DEMOLITION:

1. THE SYSTEMS SHOWN IN THESE CONTRACT DOCUMENTS ARE STABLE AND SELF-SUPPORTING IN THEIR FINAL CONFIGURATION. THE CONTRACTOR IS SOLELY RESPONSIBLE FOR MAINTAINING THE EXISTING SYSTEMS TO REMAIN IN A SAFE AND STABLE CONDITION.
2. PRIOR TO BEGINNING ANY SELECT DEMOLITION, PROVIDE THE POINT OF CONTACT, WHO IS IN RESPONSIBLE CHARGE OF THE DEMOLITION AND WILL BE AVAILABLE THROUGHOUT THE PROCESS, IN CASE OF EMERGENCY.
3. PRIOR TO BEGINNING ANY SELECT DEMOLITION, NOTE AND RECORD THE CONDITION OF THE EXISTING FACILITY AND OF THE MATERIALS TO REMAIN.
4. CONNECT SELECT DEMOLITION IN A SAFE AND CONTROLLED MANNER. PROVIDE ALL MATERIALS TO REMAIN AGAINST DAMAGE FROM THE DEMOLITION ACTIVITIES.
5. IDENTIFY ALL UTILITIES AND APPURTENANCES TO REMAIN AND TAKE MEASURES TO ENSURE THEIR CONTINUED OPERATION OR COORDINATE OUTAGES AND PROVIDE FOR ALTERNATIVE OR RELOCATED SERVICES IF REQUESTED.
6. COORDINATE THE DEMOLITION SHOWN IN THE DEMOLITION DRAWINGS WITH THE REQUIREMENTS FOR DEMOLITION AND NEW CONSTRUCTION SHOWN ELSEWHERE IN THE CONTRACT DRAWINGS.
7. PROVIDE CLEAN, SMOOTH CUTS AT THE BOUNDARIES OF SELECT DEMOLITION. LOCATE DEMOLITION BOUNDARIES WHERE NOT GENERALLY VISIBLE TO THE BUILDING OCCUPANTS OR WHERE THEY WILL BE HIDDEN FROM VIEW BY NEW FINISHES TO THE MAXIMUM EXTENT PRACTICAL.
8. WHERE NEW MASONRY WILL ADJOIN EXISTING, MATCH THE SURFACE TEXTURE AND COLOR OF THE MASONRY UNITS AS MUCH AS PRACTICAL. TOOTH NEW CMU CONSTRUCTION INTO THE EXISTING CMU TO PROVIDE AN UNINTERRUPTED RUNNING BOND APPEARANCE.

DESIGN BY:										
DRAWN BY:										
CHECKED BY:		4	7/03/2023	ISSUED FOR BID						
APPROVED BY:		3	2/03/2023	ISSUED FOR PERMIT REVISION 3						
CDOT/APPROVED BY:		1	11/04/2022	ISSUED FOR PERMIT REVISION 1						
		0	9/9/2022	ISSUED FOR PERMIT	MMB	MDG	MJT			
		NO.	DATE	REVISIONS	DES.	DRW.	CHK.	DCCO	CDOT	

TRANSYSTEMS
222 SOUTH RIVERSIDE PLAZA SUITE 610
CHICAGO, ILLINOIS 60606

SKIDMORE, OWINGS & MERRILL LLP
224 SOUTH MICHIGAN AVENUE, SUITE 1000
CHICAGO, ILLINOIS 60604

STATE OF ILLINOIS — ANNA M. DUKES — 062-157602 — LICENSED PROFESSIONAL ENGINEER

CHICAGO DEPARTMENT OF TRANSPORTATION
DIVISION OF ENGINEERING

STATE / LAKE LOOP ELEVATED STATION
200 NORTH STATE STREET, CHICAGO, IL 60601

GENERAL STRUCTURAL NOTES (1 OF 4)

CDOT PROJECT D-1-209 | DATE: 9/9/2022

SPEC. NO.

DRAWING NO. SS-001

REVISION NO.4

CAST-IN-PLACE CONCRETE:

1. REFERENCE STANDARDS:
   EXCEPT AS INDICATED, ALL CONCRETE WORK AND DETAILING, FABRICATION AND PLACING OF REINFORCING SHALL BE GOVERNED BY:
   ACI 301, SPECIFICATIONS FOR STRUCTURAL CONCRETE FOR BUILDINGS, 2010.
   ACI 305.1, HOT WEATHER CONCRETING, 2006.
   ACI 306, COLD WEATHER CONCRETING, 2010.
   ACI 315, DETAILS AND DETAILING OF CONCRETE REINFORCEMENT, 1999.
   ACI 318, BUILDING CODE REQUIREMENTS FOR STRUCTURAL CONCRETE, 2014.

2. THE CAST-IN-PLACE CONCRETE AT 28 DAYS OF AGE MINIMUM STRENGTH SHALL BE AS FOLLOWS:

ITEM	PSI
GRADE BEAMS	5,000 PSI
FOUNDATIONS	5,000 PSI
SLABS ON GRADE	4,000 PSI
CURBS AND SIDEWALKS	4,000 PSI
WALLS	6,000 PSI
ELEVATED BEAMS AND SLABS	6,000 PSI

3. HORIZONTAL CONSTRUCTION JOINTS IN CONCRETE WORK IS PERMITTED ONLY WHERE INDICATED ON THE DRAWINGS. SUBMIT PROPOSED LOCATIONS FOR CONSTRUCTION JOINTS NOT SHOWN ON DRAWINGS FOR REVIEW BY THE COMMISSIONER. ADDITIONAL CONSTRUCTION JOINTS MAY REQUIRE ADDITIONAL REINFORCEMENT AS SPECIFIED BY THE COMMISSIONER, WHICH MUST BE PROVIDED BY THE CONTRACTOR AT NO ADDITIONAL COST.

4. EMBEDDED CONDUITS, PIPES, AND SLEEVES MUST BE IN ACCORDANCE WITH ACI 318, SECTION 6.3, INCLUDING THE FOLLOWING:

   A. CONDUITS AND PIPES EMBEDDED WITHIN A SLAB, WALL, OR BEAM (OTHER THAN THOSE PASSING THROUGH)\ MUST NOT BE LARGER IN OUTSIDE DIMENSION THAN 1/3 THE OVERALL THICKNESS OF THE SLAB, WALL OR BEAM IN WHICH THEY ARE EMBEDDED.

   B. CONDUITS, PIPES AND SLEEVES MUST NOT BE SPACED CLOSER THAN THREE DIAMETERS.

   C. EMBEDDED CONDUITS, PIPES AND SLEEVES MUST BE OF UNCOATED OR GALVANIZED IRON OR STEEL NOT THINNER THAN STANDARD SCHEDULE 40 STEEL PIPE.

5. CONCRETE MIX DESIGNS MUST BE SUBMITTED FOR APPROVAL A MINIMUM OF 15 DAYS PRIOR TO THE PLACEMENT OF CONCRETE. ANY ADJUSTMENTS TO THE APPROVED MIX DESIGNS, INCLUDING CHANGES TO THE ADMIXTURES, MUST BE SUBMITTED FOR APPROVAL PRIOR TO THE PLACEMENT OF CONCRETE.

6. CONCRETE DESIGNED TO BE PUMPED MUST BE NOTED ON THE MIX DESIGNS AND MUST HAVE MIX PROPORTIONS COMPATIBLE WITH THE PUMPING PROCESS. ALL MIX DESIGNS MUST HAVE THE TYPE AND LOCATION IDENTIFIED ON THE SUBMITTAL

7. ALL MAJOR DEFECTIVE AREAS IN CONCRETE INCLUDING HONEYCOMBS, CRACKS IN EXCESS OF 0.01", AND SPALLS THAT OCCUR IN LOAD CARRYING MEMBERS VITAL TO STRUCTURAL INTEGRITY MUST BE REPAIRED USING EPOXY ADHESIVE, EPOXY MORTAR AND/OR POLYMER CONCRETE. EXTENT AND DETERMINATION OF MAJOR DEFECTIVE AREAS MUST BE DETERMINED BY THE COMMISSIONER.

8. PROVIDE CONTINUOUS NOMINAL 2x4 SHEAR KEYS IN ALL HORIZONTAL CONCRETE WALL CONSTRUCTION JOINTS WITH MINIMUM #4 DOWELS x2'-0" AT 24" CENTERS TO ALL FLOOR AND FOUNDATION CONSTRUCTION UNLESS DETAILED OTHERWISE ON THE DRAWINGS.

9. UNLESS SPECIFIED OTHERWISE, SLAB-ON-GRADE CONSTRUCTION MUST FOLLOW THE RECOMMENDATIONS OF THE GUIDE FOR CONCRETE FLOOR AND SLAB CONSTRUCTION ACI 302.1R. DURING PLACEMENT OF CONCRETE SLABS, TAKE ALL NECESSARY STEPS TO AVOID PLASTIC CRACKS DUE TO WEATHER CHANGES IN ACCORDANCE WITH ACI 305.1 AND 306R. CURE ALL CONCRETE ACCORDING TO ACI 308.1. UTILIZE THE LATEST EDITION OF ALL ACI SPECIFICATIONS.

10. WHERE ANY OPENING REQUIRED FOR THE WORK IS NOT INDICATED, OBTAIN APPROVAL FROM THE COMMISSIONER BEFORE PROCEEDING WITH THE WORK.

11. PROVIDE 3/4" CHAMFER ON ALL EXPOSED EDGES OF CONCRETE EXCEPT AS INDICATED.

12. WALLS AND PILASTERS MUST BE CAST MONOLITHICALLY. CONTRACTOR MUST LIMIT LENGTH OF CONTINUOUS WALL PLACEMENT TO 60 FEET.

13. ALL CONCRETE USED ON THE PROJECT MUST BE NORMAL WEIGHT UNO.

14. PROVIDE CONTRACTION JOINTS IN SLAB ON GRADE AS SHOWN ON THE CONTRACT DOCUMENTS. THE MAXIMUM ASPECT RATIO OF 1.5:1 MUST BE MAINTAINED. THE MAXIMUM SPACING OF THE CONTROL JOINTS MUST NOT EXCEED 15'-0". SEE DRAWINGS FOR TYPICAL DETAILS.

15. AT CORNERS AND INTERSECTIONS OF FOUNDATIONS AND WALLS, PROVIDE BENT BARS OF EQUAL SIZE AND AT SAME SPACING AS TYPICAL REINFORCING AROUND CORNER AND/OR INTO ABUTTING FOUNDATION OR WALL. REFERENCE TYPICAL DETAILS.

16. AT SLAB AND WALL OPENING CORNERS AND REENTRANT CORNERS, PROVIDE ADDITIONAL REINFORCEMENT PER TYPICAL DETAILS.

17. DO NOT BACKFILL AGAINST RETAINING WALLS UNTIL CONCRETE STRENGTH HAS REACHED 0.75 f'c AND A MINIMUM OF 7 DAYS.

CAST-IN-PLACE CONCRETE CONT.:

18. FINISH OF CONCRETE HANDICAP RAMPS TO CONFORM WITH THE REQUIREMENTS OF THE AMERICAN WITH DISABILITIES ACT (ADA).

19. WHERE BRITTLE FLOOR FINISHES ARE TO BE APPLIED TO FLOOR SLABS, COORDINATE CONTRACTION JOINT LOCATION WITH FLOOR FINISH JOINT LOCATIONS AND ARCHITECT.

20. CONDUITS AND PIPES OF ALUMINUM MUST NOT BE EMBEDDED IN STRUCTURAL CONCRETE UNLESS EFFECTIVELY COATED TO PREVENT ALUMINUM-CONCRETE REACTION OR ELECTROLYTIC ACTION BETWEEN ALUMINUM AND STEEL.

21. PROVIDE CONTRACTION/CONSTRUCTION JOINTS IN CONCRETE WALLS AT A MAXIMUM SPACING OF 1.5 THE HEIGHT OF THE WALL ABOVE THE TOP OF FOOTING. MAXIMUM JOINT SPACING MUST NOT EXCEED 20 FEET. SEE ARCHITECTURAL DRAWINGS FOR ARCHITECTURAL JOINT TREATMENT. SEE TYPICAL DETAILS FOR ADDITIONAL DETAILING REQUIREMENTS.

22. ALL REINFORCING STEEL, ANCHOR BOLTS, DOWELS, AND INSERTS MUST BE WELL SECURED IN POSITION WITH WIRE POSITIONERS BEFORE PLACING CONCRETE OR GROUT.

CONCRETE FORMWORK:

1. THE DESIGN, CONSTRUCTION, AND SAFETY OF ALL FORMWORK IS THE RESPONSIBILITY OF THE GENERAL CONTRACTOR. ALL FORMS, SHORES, BACKSHORES, FALSEWORK, BRACING, AND OTHER TEMPORARY SUPPORTS MUST BE DESIGNED BY A REGISTERED, PROFESSIONAL ENGINEER TO SUPPORT ALL LOADS IMPOSED INCLUDING THE WET WEIGHT OF CONCRETE, CONSTRUCTION EQUIPMENT, LIVE LOADS, LATERAL LOADS DUE TO WIND AND WET UNBALANCED CONCRETE. THE CONTRACTOR'S ENGINEER IS RESPONSIBLE FOR DETERMINING WHEN TEMPORARY SUPPORTS, SHORES, BACKSHORES AND OTHER BRACING CAN BE SAFELY REMOVED.

2. PROVIDE FORMWORK IN ACCORDANCE WITH ACI 301 SPECIFICATIONS FOR STRUCTURAL CONCRETE

3. TRANSYSTEMS IS NOT RESPONSIBLE FOR THE DESIGN OF ANY TEMPORARY BRACING OR SHORING. THE CONTRACTOR IS RESPONSIBLE FOR THE DESIGN OF ANY TEMPORARY BRACING OR SHORING.

CONCRETE REINFORCING:

1. DETAILING AND FABRICATION OF REINFORCING STEEL AND SUPPORTS MUST CONFORM TO:
   ACI 315-99 DETAILS AND DETAILING OF CONCRETE REINFORCING.
   ACI 318-14 BUILDING CODE REQUIREMENTS FOR STRUCTURAL CONCRETE.
   SP-66 ACI DETAILING MANUAL, 2004.

2. MATERIALS:

ITEM	ASTM	Fy (KSI)
DEFORMED REINF BARS	A615	60
DEFORMED REINF BARS - WELDABLE	A705	60
SMOOTH WELDED WIRE MESH	A185	65

3. ALL HOOKS AND BENDS IN REINFORCING BARS MUST CONFORM TO ACI DETAILING STANDARDS UNLESS SHOWN OTHERWISE.

4. PROVIDE REINFORCING BARS IN ACCORDANCE WITH THE BAR BENDING DIAGRAM IF BAR TYPES ARE SPECIFIED IN UNSCHEDULED BEAMS, SLAB, COLUMNS AND WALLS DETAIL REINFORCING AS FOLLOWS:
   A. LAP BEAM TOP REINFORCING BARS AT MID SPAN BETWEEN SUPPORTS WITH A CLASS B TENSION SPLICE.

   B. LAP BEAM BOTTOM REINFORCING BARS AT THE SUPPORTS WITH A CLASS B TENSION SPLICE.

   C. LAP VERTICAL BARS IN COLUMNS AND WALLS ONLY AT FLOOR LINES, UNLESS NOTED OTHERWISE.

   D. LAP REINFORCING BARS WITH CLASS B TENSION SPLICE AT OTHER LOCATIONS, UNLESS NOTED OTHERWISE.

   E. PROVIDE STANDARD HOOKS IN TOP BARS AT CANTILEVER AND DISCONTINUOUS ENDS OF BEAMS, WALLS AND SLABS.

   F. PROVIDE CORNER BARS FOR ALL HORIZONTAL BARS AT THE INSIDE AND OUTSIDE FACES OF INTERSECTION BEAMS OR WALLS, CORNER BARS ARE NOT REQUIRED AT INSIDE FACE IF HORIZONTAL BARS ARE HOOKED. CORNER BARS MUST BE THE SAME SIZE AS LAPPED BARS AND MUST BE CLASS A TENSION SPLICE WITH 90 DEGREE BEND EACH SIDE, UNLESS NOTED OTHERWISE.

   G. UNLESS NOTED OTHERWISE ON DRAWINGS LAP ALL WELDED WIRE MESH A MINIMUM DISTANCE OF ONE CROSS WIRE SPACING PLUS 2 INCHES.

   H. PROVIDE WELDED WIRE MESH IN FLAT SHEETS.

   I. ALL REINFORCING MUST BE HELD SECURELY IN POSITION WITH STANDARD ACCESSORIES DURING CONCRETE PLACEMENT. REINFORCING MUST NOT BE SUPPORTED ON BOOSTERS MADE OF CMU OR CONCRETE NOT SPECIFICALLY DESIGNED TO SUPPORT THE REINFORCING STEEL.

5. GRADE BEAM BOTTOM STEEL MUST BE CHAIRED AT 5'-0" MAXIMUM CENTERS USING BEAM BOLSTERS PROVIDING 3" BOTTOM COVER TO REINFORCING STEEL. BEAM BOLSTERS USED MUST BE INTENDED FOR SUPPORT IN SOIL.

CONCRETE REINFORCING CONT.:

6. ADDITIONAL WALL ENFORCEMENT IS REQUIRED AROUND ALL OPENINGS IN THE WALL. SEE TYPICAL DETAIL ON THE DRAWINGS.

7. SPLICES IN WALL REINFORCING STEEL.
   A. UNLESS SHOWN OTHERWISE ON THE DRAWINGS, SPLICE NO MORE THAN 50% OF THE BARS IN ANY VERTICAL WIDTH OF WALL WITH A MINIMUM OFFSET BETWEEN SPLICE PLANES OF A TENSION DEVELOPMENT LENGTH OF THE BARS. SPLICED BARS MUST BE STAGGERED WITH UNSPLICED BARS. SPLICES MUST BE A CLASS B TENSION SPLICE.

8. DO NOT USE HEAT IN THE FABRICATION OR INSTALLATION OF REINFORCEMENT.

9. REINFORCING STEEL CLEAR COVER MUST BE AS FOLLOWS. COVER IN MEMBER NOT SHOWN BELOW MUST CONFORM TO THE REQUIREMENTS OF ACI 318 UNLESS NOTED OTHERWISE ON DRAWINGS. EXCEPT AS INDICATED, MINIMUM COVER FOR REINFORCING MUST BE AS FOLLOWS:

ITEM	CLEAR (IN)
FOUNDATIONS, GRADE BEAMS:	------
TOP	2
BOTTOM	3
SIDES, EARTH FORMED	3
SIDES, FORMED	2
DRILLED PIERS:	------
SIDES	3
BOT	6
INTERIOR:	------
WALLS	2
COLUMNS	1 1/2
SLABS ABOVE GRADE	1
BEAMS, JOIST ABOVE GRADE	1 1/2
SLABS ON GRADE	PER DETAIL

10. CONTRACTOR MUST MAKE ALLOWANCE TO PROVIDE AND INSTALL TWO (2) TONS OF ADDITIONAL REINFORCING STEEL (SIZE TO RANGE FROM #4 TO #10) TO BE USED IN THE FIELD AS DIRECTED BY THE COMMISSIONER. ANY UNUSED PORTION OF THE QUANTITY MUST BE CREDITED.

11. WHERE NO REINFORCING IS INDICATED IN SLABS ON GRADE, PROVIDE #4 @ 12" ON CENTER, EACH WAY.

12. SEE REINFORCING BAR DEVELOPMENT TABLE FOR REQUIRED DEVELOPMENT AND LAP SPLICE LENGTHS.

13. REINFORCING BARS MUST BE FREE OF DIRT AND FORM RELEASE AGENTS.

ARCHITECTURAL CLADDING:

1. TYPICAL DETAILS INDICATE GENERAL CRITERIA FOR ASSUMED CONNECTIONS OF ARCHITECTURAL CLADDING TO BASE BUILDING STRUCTURE. PROVIDE DESIGNS THAT MEET INDICATED CRITERIA AND CONFORM TO LISTED CODES AND STANDARDS. REFER TO SPECIFICATIONS FOR ADDITIONAL INFORMATION.

2. ALL INSERTS, ANCHORS AND SLEEVES SHALL BE CAST IN PLACE. DRILLED AND POWDER DRIVEN FASTENERS WILL BE PERMITTED ONLY WHEN IT CAN BE SHOWN THAT THE INSERTS WILL NOT SPALL THE CONCRETE AND ARE LOCATED SO AS TO AVOID THE TENDONS AND ANCHORAGE'S AND ONLY WHEN APPROVED IN WRITING BY THE COMMISSIONER.

MASONRY:

REFERENCE STANDARDS:
1. EXCEPT AS INDICATED, ALL DESIGN, MANUFACTURE AND CONSTRUCTION OF MASONRY SHALL BE GOVERNED BY:
   ACI 530, BUILDING CODE REQUIREMENTS FOR MASONRY STRUCTURES, 2011.
   ACI 530.1, SPECIFICATION FOR MASONRY STRUCTURES, 2011.

MATERIAL	ASTM SPEC	GRADE	TYPE	PSI
MASONRY STRENGTH f'm:				1500
HOLLOW CMU, LOAD-BEARING:	C90			1900
HOLLOW CMU, NON-LOAD BEARING:	C90			1500
MORTAR, ALL STRUCTURAL MASONRY:	C270	N		
GROUT:	C476			3000
DEFORMED BAR REINFORCING:	A615	60		
DEFORMED BAR REINFORCING (WELDABLE):	A706	60		
HORIZONTAL JOINT REINFORCING:	A82			

MASONRY CONT.:

2. ALL CMU SHALL BE TWO-CELL TYPE UNITS EXCEPT LINTELS WHICH SHALL BE U-SHAPED UNITS. BOND BEAM UNITS MAY BE U-SHAPED OR TWO-CELL TYPE.

3. THE CONTRACTOR SHALL SUBMIT FOR APPROVAL SHOP DRAWINGS AND SCHEDULES SHOWING SIZE, DETAILS, LOCATION, ETC. FOR ALL WALLS INCLUDING LINTELS.

4. ALL MASONRY RUNNING BOND WALLS SHALL HAVE BOND BEAMS TO BE LOCATED AT EACH FLOOR AND ROOF LEVEL, TOP OF ALL WALLS AND AROUND ALL OPENINGS AS SPECIFIED ON THE TYPICAL CMU DETAILS. BOND BEAMS TO BE REINFORCED ACCORDING TO TYPICAL DETAILS.

5. ALL MASONRY STACK BOND WALLS TYPE SHALL HAVE BOND BEAMS @ 4'-0" ON CENTER IN ADDITION TO TYPICAL BOND BEAMS AT FLOORS, ROOFS AND TOP OF WALLS.

6. SEE ARCHITECTURAL DRAWINGS FOR LOCATIONS AND SPECIFICATIONS OF FIRE RATED MASONRY.

7. RUNNING BOND PATTERN SHALL BE USED FOR ALL MASONRY WORK UNLESS OTHERWISE NOTED.

8. PROVIDE MOVEMENT (CONTROL AND EXPANSION) JOINTS IN WALLS WHERE INDICATED ON DRAWINGS. BOND BEAMS SHALL BE DISCONTINUOUS ACROSS MOVEMENT JOINTS UNLESS NOTED OTHERWISE:

9. UNLESS NOTED OTHERWISE ON PLANS, FILL CELLS WITH GROUT UNDER LINTELS, BEARING PLATES, BEAMS, ETC., 3 COURSES MINIMUM BELOW BEARING.

10. ALL REINFORCING STEEL SHALL BE SUPPORTED AND FASTENED TO APPROVED POSITIONERS LOCATED AT 192 BAR DIAMETERS MAXIMUM SPACING AND WITH A MINIMUM OF TWO POSITIONERS PER GROUT POUR (ONE NEAR THE BOTTOM AND ONE NEAR THE TOP) TO PREVENT DISPLACEMENT DURING THE PLACEMENT OF GROUT.

12. GROUT ALL CELLS BELOW GRADE SOLID.

13. PROVIDE REINFORCING BAR SPLICES AS SPECIFIED IN THE MASONRY TYPICAL DETAIL TABLE. BAR SPLICE COUPLERS MAY BE CONSIDERED AS A SUBSTITUTE, SUBMIT MANUFACTURER'S DATA PRIOR TO INSTALLATION.

14. MAXIMUM GROUT LIFT = 51". GROUT SHALL BE MECHANICALLY VIBRATED.

15. GROUT CONSTRUCTION JOINTS SHALL BE FORMED BY STOPPING THE POUR 1" BELOW THE TOP OF THE UPPERMOST UNIT.

16. HORIZONTAL JOINT REINFORCEMENT:
    9 GAUGE DEFORMED WIRE, LADDER TYPE REINFORCEMENT HOT DIP GALVANIZED COLD DRAWN STEEL IN EVERY SECOND BLOCK COURSE, FULL HEIGHT, AND WHERE INDICATED. PROVIDE IN FIRST BED JOINT ABOVE AND BELOW OPENINGS AND EXTENDING 24" BEYOND OPENINGS. LAP FULL WIDTH AT CORNERS AND INTERSECTIONS.

17. PROVIDE PREFABRICATED "L" AND "T" SHAPED HORIZONTAL JOINT REINFORCING AT WALL INTERSECTIONS.

18. ALL CELLS CONTAINING REINFORCING SHALL BE COMPLETELY GROUTED. VERTICAL CELLS TO BE GROUTED SHALL HAVE VERTICAL ALIGNMENT SUFFICIENT TO MAINTAIN A CLEAR UNOBSTRUCTED CONTINUOUS VERTICAL CELL WITH HORIZONTAL DIMENSIONS NOT LESS THAN 2"x3". INSTALL REINFORCING BARS ACCURATELY IN POSITION INDICATED AND SECURE WITH STANDARD ACCESSORIES DURING GROUT PLACEMENT. GROUT REINFORCED MASONRY WALLS IN LIFTS 48" HIGH MAXIMUM.

19. ALL MASONRY BOND BEAMS AND LINTELS SHALL BE COMPLETELY GROUTED. BOND BEAMS AT INTERSECTING CMU WALLS SHALL MEET AT THE SAME ELEVATION AND THE REINFORCING SHALL BE LAPPED AS REQUIRED.

DESIGN BY:																					
DRAWN BY:																					
CHECKED BY:																					
APPROVED BY:		4	7/03/2023	ISSUED FOR BID																	
CDOT/APPROVED BY:		0	9/9/2022	ISSUED FOR PERMIT	MMB	MDG	MJT														
		NO.	DATE	REVISIONS	DES.	DRW.	CHK.	DCCO	CDOT												

TRANSYSTEMS
222 SOUTH RIVERSIDE PLAZA SUITE 610
CHICAGO, ILLINOIS 60606

SKIDMORE, OWINGS & MERRILL LLP
224 SOUTH MICHIGAN AVENUE, SUITE 1000
CHICAGO, ILLINOIS 60604

ANNA M. DUKES
062-057286
LICENSED PROFESSIONAL ENGINEER
STATE OF ILLINOIS

CHICAGO DEPARTMENT OF TRANSPORTATION
DIVISION OF ENGINEERING

STATE / LAKE LOOP ELEVATED STATION
200 NORTH STATE STREET, CHICAGO, IL 60601

SPEC. NO.

GENERAL STRUCTURAL NOTES (2 OF 4)

DRAWING NO.
SS-002

CDOT PROJECT D-1-209 | DATE: 9/9/2022 | REVISION NO.4

STRUCTURAL STEEL:

1. REFERENCE STANDARDS:
   EXCEPT AS INDICATED, ALL DESIGN, FABRICATION AND ERECTION OF STRUCTURAL STEEL SHALL BE GOVERNED BY:
   AISC MANUAL OF STEEL CONSTRUCTION - LATEST EDITION.
   AISC CODE OF STANDARD PRACTICE FOR STEEL BUILDINGS AND BRIDGES, 2010.
   AISC FCD QUALITY CERTIFICATION PROGRAM, 1995.
   AISC SEISMIC PROVISIONS FOR STRUCTURAL STEEL, 2016.
   AWS D1.1, STRUCTURAL WELDING CODE - STEEL, 2010.

2. MATERIALS:

COMPONENT	ASTM SPEC	GRADE	Fy (KSI)
WIDE FLANGE SHAPES	A992		50
ROUND HOLLOW STRUCTURAL SECTIONS (HSS)	A500	C	46
RECTANGULAR STRUCTURAL SECTIONS (HSS)	A500	B	46
PIPE	A53	C	35
OTHER STRUCTURAL SHAPES AND BARS	A36		36
HIGH STRENGTH PLATES	A572		50
PLATES AND MISCELLANEOUS STEEL	A36		36
BOLTS	F3125		
HIGH STRENGTH BOLTS	F3125		
ANCHOR RODS	F1554		36
GRATING (GALV.)	A1011	B	30
STAINLESS STEEL THREADED ROD	F593		
STAINLESS STEEL NUTS AND WASHERS	F594		
WELDING ELECTRODES	AWS	A105,A5.1 OR A5.5, E70	

3. WELDING SHALL BE PERFORMED ONLY BY OPERATORS QUALIFIED BY THE AWS STANDARD QUALIFICATION PROCEDURE TO PERFORM THE PARTICULAR TYPE OF WORK REQUIRED.

4. MINIMUM SIZE OF ALL FILLET WELDS SHALL CONFORM TO AISC SPECIFICATIONS.

5. ALL WELDS ALONG LENGTHS OF MEMBERS INDICATED ON ARCHITECTURAL OR STRUCTURAL DRAWINGS BUT NOT SIZED SHALL BE A MINIMUM OF 3/16"x3" FILLET WELD.

6. ALL FASTENERS USED FOR CONNECTIONS BETWEEN STRUCTURAL STEEL MEMBERS SHALL BE TENSION CONTROLLED (TWIST-OFF) BOLTS UNLESS NOTED OTHERWISE. FASTENERS MAY NOT BE REUSED ONCE INSTALLED.

7. PAINT AND PROTECTION:
   A. TOUCH UP PAINT ON FASTENERS, WELDS AND ABRADED AREAS AFTER ERECTION. STEEL ITEMS EXPOSED TO WEATHER IN FINISHED STRUCTURE SHALL BE HOT-DIPPED GALVANIZED AFTER FABRICATION, UNLESS OTHERWISE NOTED. ALL FASTENERS USED IN EXTERIOR APPLICATIONS SHALL BE GALVANIZED.
   B. STRUCTURAL STEEL UNLESS NOTED: PREPARE STEEL SURFACES PER SSPC-SP3 "POWER TOOL CLEANING" AND PAINT WITH FABRICATOR'S STANDARD PRIME COAT, SUCH AS TNEMEC 10-1009. TOUCH UP AFTER ERECTION.
   C. ALL STEEL TO BE EMBEDDED IN CONCRETE AND NOT PERMANENTLY EXPOSED TO WEATHER SHALL BE UNPRIMED.
   D. PROVIDE MINIMUM 3" CONCRETE COVER FOR ALL STEEL BELOW GRADE.
   E. LINTELS SUPPORTING EXTERIOR MASONRY WYTHES AND MEMBERS EXPOSED TO WEATHER IN FINISHED STRUCTURES:
      1. HOT DIP GALVANIZE PER ASTM A123 AFTER FABRICATION. COATING WEIGHT PER PARAGRAPH 5.1 OF ASTM A123 AND A153. FABRICATE ASSEMBLIES PER ASTM A143, A384, AND A385. AFTER ERECTION, REPAIR DAMAGED AREAS AND WELDS MADE AFTER GALVANIZING IN ACCORDANCE WITH ASTM A780 WITH ORGANIC ZINC RICH PAINT COMPLYING WITH DOD-P-21035 OR MIL-P-26915, MULTIPLE COATS TO DRY FILM THICKNESS OF 4 MILS.

8. COLUMN BASE PLATES SHALL BE SET TO THE ELEVATION INDICATED ON THE DRAWINGS AND LEVELED USING STEEL SHIMS OR BY DOUBLE NUTS ON ANCHOR BOLTS. BASE PLATES SHALL THEN BE GROUTED WITH NON-SHRINK, HIGH STRENGTH NONMETALLIC GROUT WITH A COMPRESSIVE STRENGHT OF 6000 PSI. TIGHTEN ANCHOR BOLTS AFTER SUPPORTED MEMBERS HAVE BEEN POSITIONED AND PLUMBED.

9. FABRICATE AND ASSEMBLE STRUCTURAL ASSEMBLIES IN SHOP TO GREATEST EXTENT POSSIBLE.

10. FABRICATE STRUCTURAL STEEL MEMBERS WITH NATURAL CAMBER UP EXCEPT AS INDICATED.

11. PUNCH, SUB-PUNCH AND REAM OR DRILL ALL BOLT HOLES. DO NOT USE A CUTTING TORCH TO ENLARGE BOLT HOLES, UNLESS APPROVAL IS OBTAINED FROM THE COMMISSIONER.

12. DIMENSIONAL TOLERANCES OF FABRICATE STRUCTURAL STEEL SHALL CONFORM TO SECTION 6.4 OF THE AISC CODE OF STANDARD PRACTICE UNLESS NOTED OTHERWISE.

13. ERECTION TOLERANCES OF ANCHOR BOLTS, EMBEDDED ITEMS, AND ALL STRUCTURAL STEEL UNLESS SPECIFIED OTHERWISE ON THE DRAWINGS SHALL CONFORM TO THE AISC CODE OF STANDARD PRACTICE.

14. CONTRACTOR SHALL PROTECT ANY UNPRIMED STRUCTURAL STEEL FROM DETRIMENTAL EFFECTS OF CORROSION, AS REQUIRED, UNTIL THE STEEL IS ENCLOSED AND PROTECTED BY THE NEW CONSTRUCTION.

STRUCTURAL STEEL CONT.:

15. SPLICING OR FIELD CUTTING OF STRUCTURAL STEEL MEMBERS IS PROHIBITED WITHOUT PRIOR APPROVAL OF THE COMMISSIONER AS TO LOCATION, TYPE OF SPLICE OR MODIFICATION TO BE MADE. ANY MEMBER HAVING SPLICE NOT SHOWN AND DETAILED ON SHOP DRAWINGS WILL BE REJECTED.

16. CONTRACTOR SHALL COORDINATE STRUCTURAL STEEL FIREPROOFING REQUIREMENTS. ALL INTERIOR STRUCTURAL STEEL, INCLUDING STEEL JOISTS, SCHEDULED OR INDICATED TO RECEIVE SPRAY APPLIED FIREPROOFING SHALL BE DELIVERED TO THE PROJECT SITE UNPRIMED, STEEL EXPOSED TO CORROSIVE CONDITIONS AFTER INSTALLATION SHALL BE PRIMED WITH A PROTECTIVE COATING WHICH DOES NOT DIMINISH THE BOND BETWEEN THE SPRAY APPLIED FIREPROOFING, AND THE STEEL SUBSTRATE, ANY PRIMER, AND/OR COATING APPLIED TO STRUCTURAL STEEL SHALL BE APPROVED FOR USE IN THE APPLICABLE U.L. FIRE RESISTANCE ASSEMBLY USED ON THE PROJECT.

17. STRUCTURAL STEEL FABRICATOR SHALL PARTICIPATE IN THE AISC QUALITY CERTIFICATION PROGRAM, AND SHALL BE DESIGNATED AN AISC-CERTIFIED PLANT.

18. FIELD CONNECTIONS SHALL BE BOLTED EXCEPT WHERE WELDED CONNECTIONS ARE INDICATED ON THE STRUCTURAL DRAWINGS.

19. CONTRACTOR SHALL SUBMIT ERECTION AND SHOP DRAWINGS FOR REVIEW BY COMMISSIONER. FABRICATION SHALL NOT BEGIN PRIOR TO SHOP DRAWING APPROVAL BY COMMISSIONER.

20. PRIOR TO COMMENCEMENT OF STEEL ERECTION, CONTRACTOR MUST PROVIDE THE STEEL ERECTOR WRITTEN NOTIFICATION THAT THE CONCRETE IN THE FOUNDATIONS, PIERS AND WALLS OR THE MORTAR IN THE MASONRY PIERS AND WALLS SHALL HAVE EITHER 75 PERCENT OF THE INTENDED MINIMUM COMPRESSIVE STRENGTH OR SUFFICIENT STRENGTH TO SUPPORT THE LOADS IMPOSED DURING STEEL ERECTION.

21. FABRICATOR SHALL DESIGN CONNECTIONS AND SUBMIT PROFESSIONAL ENGINEERED SIGNED & SEALED CALCULATIONS TO THE COMMISSIONER FOR REVIEW FOR CONNECTIONS NOT DESIGNED AND PROVIDED ON THE DRAWINGS. UNLESS SPECIFIC END MOMENTS AND REACTIONS ARE INDICATED ON DRAWINGS, DESIGN AND FABRICATE CONNECTIONS TO RESIST SHEAR BASED ON THE MAXIMUM UNIFORM LOAD CAPACITY OF THE MEMBER FOR THE SPAN INCREASED BY 15%, BUT NO MORE THAN THE SHEAR CAPACITY OF THE MEMBER.

22. DIAMETER OF BOLT HOLE SHALL BE 1/16" MAXIMUM LARGER THAN THE BOLT'S DIAMETER UNLESS OTHERWISE NOTED.

STEEL DECK:

1. REFERENCE STANDARDS:
   EXCEPT AS INDICATED, DESIGN, MANUFACTURE AND ERECTION OF COMPOSITE FLOOR DECK, FORM DECK AND ROOF DECK MUST BE GOVERNED BY:
   SDI DESIGN MANUAL FOR COMPOSITE DECKS, FORM DECKS AND ROOF DECKS, 2007. AWS D1.3, STRUCTURAL WELDING CODE – SHEET STEEL, 1998.

2. CONTRACTOR MUST SUBMIT SHOP DRAWINGS FOR REVIEW BY COMMISSIONER. FABRICATION SHALL NOT BEGIN PRIOR TO SHOP DRAWING APPROVAL BY COMMISSIONER.

3. MATERIALS:
   A. SEE SPECIFICATION, PLAN AND METAL DECK SCHEDULE FOR SIZE, GAGE, MIN Fy=50 KSI FOR COMPOSITE DECK AND Fy=33 KSI FOR ROOF DECK, REQUIRED SUPPORT FASTENERS, SIDELAP FASTENERS AND FINISH.
   B. SELF DRILLING SCREWS (SDS): HEX WASHER HEAD SELF-DRILLING TAPPING SCREWS (ASTM C1513) MANUFACTURED FROM CARBON STEEL (ASTM A510, MIN GRADE 1018). ZINC PLATING MUST MEET MINIMUM CORROSION RESISTANCE REQUIREMENTS OF ASTM F1941.

4. DECK MUST BE PROVIDED TO RUN CONTINUOUS OVER AT LEAST 3 SPANS EXCEPT AS NOTED OTHERWISE.

5. CONNECT METAL DECK TO STRUCTURAL MEMBERS, INCLUDING PERIMETER ANGLES PER THE METAL DECK SCHEDULE.

6. MINIMUM METAL DECK END BEARING ON SUPPORTS = 2".

7. LAP ENDS OF ROOF DECK 4" MINIMUM.

8. WELDING OF METAL DECK SHALL BE IN ACCORDANCE WITH AWS D1.3-08.

9. PROVIDE 16 GA. (0.0598") TERMINATION STRIPS OR AS DETERMINED BY ARCHITECT WHERE EDGE OF DECK DOES NOT CONTACT SUPPORTING STRUCTURE.

10. METAL DECK ACCESSORIES SHALL BE FORMED FROM STEEL SHEETS CONFORMING TO ASTM-446, GRADE A THE FINISH SHALL BE ZINC COATING CONFORMING TO ASTM A-525, CLASS G-60 (G-90).

POST-INSTALLED ADHESIVE ANCHORS :

1. ANCHORAGE TO CONCRETE: HILTI HIT-RE 500-V3 REPORT EPOXY (ICC ESR-3814) OR APPROVED EQUAL. INSTALL PER ICC AND MANUFACTURER'S PRINTED INSTALLATION INSTRUCTIONS. SUBSTITUTES COMPLYING WITH ACI 318 FOR USE IN CRACKED CONCRETE MAY BE CONSIDERED; SUBMIT EVALUATION REPORT DEMONSTRATING COMPLIANCE WITH GOVERNING CODE PRIOR TO INSTALLATION.
   1.1. STEEL THREADED ROD ANCHORS SHALL BE HILTI HAS-E STANDARD RODS. SIZE AND EMBEDMENT SHALL BE AS INDICATED ON DRAWINGS.

2. ANCHORAGE TO SOLID GROUTED CONCRETE MASONRY UNITS: HILTI HIT-HY 70 (ICC ESR-2682). INSTALL PER ICC REPORT AND MANUFACTURER'S PRINTED INSTALLATION INSTRUCTIONS. SUBSTITUTES COMPLYING WITH ACI 530 MAY BE CONSIDERED. SUBMIT EVALUATION REPORT DEMONSTRATING COMPLIANCE WITH GOVERNING CODE PRIOR TO INSTALLATION. RODS. SIZE AND EMBEDMENT SHALL STEEL THREADED ROD ANCHORS SHALL BE HILTI HAS-E BE AS INDICATED ON DRAWINGS.

3. VERIFY THAT THE SHELF LIFE OF THE ADHESIVE HAS NOT BEEN EXCEEDED ON THE DATE OF INSTALLATION.

4. TESTING AND INSPECTION: REFER TO ICC REPORT(S) AND SPECIAL INSPECTION TABLE FOR TESTING AND INSPECTION REQUIREMENTS. WHERE TESTING IS REQUIRED, ANCHORS SHALL BE TESTED TO THE FOLLOWING LOADS UNLESS OTHERWISE INDICATED.

5. FOR CONNECTIONS TO EXISTING REINFORCED CONCRETE OR MASONRY, VERIFY THE LOCATIONS OF THE EXISTING REINFORCING BARS PRIOR TO DRILLING USING A REINFORCING SCANNER AND/OR OTHER NON-DESTRUCTIVE MEANS, NOTIFY THE COMMISSIONER PRIOR TO INSTALLATION IF ANCHOR LOCATIONS CONFLICT WITH EXISTING REINFORCING BARS. DO NOT DRILL THROUGH EXISTING REINFORCING BARS.

POST-INSTALLED MECHANICAL ANCHORS

1. EXPANSION ANCHORS:
   1.1. ANCHORAGE TO CONCRETE: HILTI KWIK BOLT TZ (ICC ESR-1917) OR APPROVED EQUAL. INSTALL PER ICC REPORT AND MANUFACTURER'S PRINTED INSTALLATION INSTRUCTIONS. SUBSTITUTES COMPLYING WITH CRITERIA FOR USE IN CRACKED CONCRETE MAY BE CONSIDERED. SUBMIT EVALUATION REPORT DEMONSTRATING COMPLIANCE TO THE COMMISSIONER FOR APPROVAL PRIOR TO INSTALLATION.
   1.2. ANCHORAGE TO SOLID GROUTED MASONRY UNITS: HILTI KWIK BOLT 3 (ICC ESR-1385). INSTALL PER ICC REPORT AND MANUFACTURER'S PRINTED INSTALLATION INSTRUCTIONS. SIMILAR SUBSTITUTES MAY BE CONSIDERED; SUBMIT EVALUATION REPORT DEMONSTRATING COMPLIANCE WITH GOVERNING CODE PRIOR TO INSTALLATION.
   1.3. FOR CONNECTIONS TO EXISTING REINFORCED CONCRETE, VERIFY THE LOCATIONS OF THE REINFORCING USING NON-DESTRUCTIVE TESTING PRIOR TO DRILLING. NOTIFY THE COMMISSIONER IF ANCHOR LOCATIONS CONFLICT WITH EXISTING REINFORCING. DO NOT DRILL THROUGH EXISTING REINFORCING BARS.

2. POWDER DRIVEN FASTENERS:
   2.1. FASTENING WOOD OR COLD FORMED METAL FRAMING TO STEEL: HILTI X-U NAIL, 0.157" DIAMETER (ICC-ESR-2269). FASTENER LENGTH SHALL BE AS REQUIRED FOR MINIMUM SHANK PENETRATION THROUGH STEEL. INSTALL PER ICC REPORT.
   2.2. FASTENING COLD FORMED METAL FRAMING TO CONCRETE: TYPE X-U NAIL, 0.157" DIAMETER, 11/4" MINIMUM EMBEDMENT (ICC ESR-2269). INSTALL PER ICC REPORT.
   2.3. SUBSTITUTES MAY BE CONSIDERED; SUBMIT MANUFACTURER'S DATA PRIOR TO INSTALLATION.

SPECIAL INSPECTIONS FOR STRUCTURAL WORK:

1. SPECIAL INSPECTIONS ARE REQUIRED BY SECTION 1704 OF THE REFERENCED BUILDING CODE. THE INTENT OF SPECIAL INSPECTIONS IS TO VERIFY THE COMPLIANCE OF MATERIALS, INSTALLATION, FABRICATION, ERECTION AND/OR PLACEMENT OF COMPONENTS WITH THE COMPLETED SET OF CONSTRUCTION DOCUMENTS AND REFERENCED STANDARDS. IT IS THE RESPONSIBILITY OF ALL PARTIES INVOLVED TO BECOME FAMILIAR WITH THE SPECIAL INSPECTION REQUIREMENTS SET FORTH IN CHAPTER 17 OF THE REFERENCED BUILDING CODE. SPECIAL INSPECTIONS SHALL BE PROVIDED BY THE OWNER OR THE OWNER'S AGENT AND SHALL NOT BE CONSIDERED IN THE SCOPE OF WORK OF THE CONTRACTOR.

SUBWAY CONSTRUCTION SEQUENCE:

PLATFORM ELEVATOR - SOUTH ADDITION

1. SINGLE PHASE CONSTRUCTION
   A. CONSTRUCTION OF SOUTH CORRIDOR PROPOSES TO USE PARTIAL LANE CLOSURES. DURING THIS PHASE, TRAFFIC ALONG STATE STREET WILL BE SPLIT, WITH ONE SOUTHBOUND LANE ALONG THE WEST SIDE AND ONE NORTHBOUND LANE ALONG THE EAST SIDE OF STATE STREET. THIS PHASE WILL CONTAIN STATION CLOSURES IN ORDER TO CUT THE HOLE FOR THE ELEVATOR IN THE TOP OF THE SUBWAY TUBE, CUT THE HOLE FOR THE ELEVATOR AND FOR THE RELOCATION OF (4) COLUMNS AROUND THE ELEVATOR IN THE PLATFORM, AND DEMO THE STAIR LID AND PLACE ROOF OF SOUTH ADDITION. A SHORT STATION CLOSURE WILL ALSO BE REQUIRED TO PLACE THE FINAL ELECTRICAL CONNECTION. COUCH WILL NOT HAVE ALLEY ACCESS FROM STATE STREET DURING THIS PHASE.

STREET ELEVATOR - NORTHWEST ADDITION

1. SINGLE PHASE CONSTRUCTION
   A. CONSTRUCTION OF THE STREET ELEVATOR PROPOSES TO USE SHIFTED TRAFFIC. ONE LANE ALONG STATE STREET WILL BE MAINTAINED FOR EACH DIRECTION OF TRAFFIC BUT ALL OF THE LANES WILL BE SHIFTED EAST ALONG STATE STREET. A SHORT STATION CLOSURE WILL BE REQUIRED TO PLACE THE FINAL ELECTRICAL CONNECTION.

GENERAL SUBWAY CONSTRUCTION NOTES

1. MONITORING OF THE EXISTING STRUCTURE FOR VIBRATION AND MOVEMENT WILL BE PROVIDED CONTINUOUSLY BY THE CONTRACTOR DURING CONSTRUCTION. THE REPORTS SHALL BE ROBUST AND SHALL ALLOW FOR REAL-TIME ADJUSTMENTS TO CONSTRUCTION ACTIVITIES IF THE PARAMETERS ARE EXCEEDED.
2. STATE STREET, FROM LAKE TO RANDOLPH, WILL BE REPAVED AFTER COMPLETION OF CONSTRUCTION ACTIVITIES.
3. FINAL PHASING OF SUBWAY PROJECT SHOULD BE COORDINATED WITH PHASING OF ELEVATED STATION PROJECT TO ENSURE THE COMBINED PHASING HAS BEEN REVIEWED/ADDRESSED.
4. THE EXACT EXTENTS AND DESIGN OF THE TEMPORARY SOIL RETENTION SYSTEM WILL BE DETERMINED BY THE CONTRACTOR. SCHEMATIC DRAWINGS OF THIS SYSTEM ARE SHOWN ON SHEETS SS-500 THRU SS-502. CONTRACTOR SHALL PROVIDE FINAL DESIGN CALCULATIONS AND SHOP DRAWINGS OF THE TSRS WALLS TO BE SIGNED AND SEALED BY A REGISTERED STRUCTURAL ENGINEER IN THE STATE OF ILLINOIS FOR REVIEW AND ACCEPTANCE.
5. REFERENCE G-110 FOR MILESTONES AND ADDITIONAL INFORMATION.

NO.	DATE	REVISIONS	DES.	DRW.	CHK.	DCCO	CDOT
4	7/03/2023	ISSUED FOR BID					
3	2/03/2023	ISSUED FOR PERMIT REVISION 3					
1	11/04/2022	ISSUED FOR PERMIT REVISION 1					
0	9/9/2022	ISSUED FOR PERMIT	MMB	MDG	MJT		

DESIGN BY:
DRAWN BY:
CHECKED BY:
APPROVED BY:
CDOT/APPROVED BY:

TRANSYSTEMS
222 SOUTH RIVERSIDE PLAZA SUITE 610
CHICAGO, ILLINOIS 60606

SKIDMORE, OWINGS & MERRILL LLP
224 SOUTH MICHIGAN AVENUE, SUITE 1000
CHICAGO, ILLINOIS 60604

ANNA M. IUKS
062-017280
REGISTERED PROFESSIONAL ENGINEER
STATE OF ILLINOIS

CHICAGO DEPARTMENT OF TRANSPORTATION
DIVISION OF ENGINEERING

STATE / LAKE LOOP ELEVATED STATION
200 NORTH STATE STREET, CHICAGO, IL 60601

GENERAL STRUCTURAL NOTES (3 OF 4)

CDOT PROJECT D-1-209

DATE: 9/9/2022

SPEC. NO.

DRAWING NO. SS-003

REVISION NO. 4

#	NUMBER
&	AND
=	EQUAL, EQUALS
@	AT
A/C	AIR CONDITIONING
AB	ANCHOR BOLT
ABC	AGGREGATE BASE COURSE
ACI	AMERICAN CONCRETE INSTITUTE
ADDL	ADDITIONAL
ADJ	ADJACENT
AFF	ABOVE FINISEHD FLOOR
AH, AHU	AIR HANDLING UNIT
AISC	AMERICAN INSTITUTE OF STEEL CONSTRUCTION
ALT	ALTERNATE
APA	AMERICAN PLYWOOD ASSOCIATION
APPROX	APPROXIMATELY
ARCH'L	ARCHITECTURAL
ASTM	AMERICAN SOCIETY FOR TESTING AND MATERIALS
AT/FP	ANTI-TERRORISM/ FORCE PROTECTION
AWS	AMERICAN WELDING SOCIETY
B/	BOTTOM OF
BET	BETWEEN
BFF	BELOW FINISHED FLOOR
BLK	BLOCKING
BLW	BELOW
BM	BEAM
BN	BOUNDARY NAIL
BOF	BOTTOM OF FOOTING
BOT	BOTTOM
BRDG	BRIDGE / BRIDGING
BRG	BEARING
C	CHANNEL
CE	CARBON EQUIVALENT
CENT	CENTERED
CFMF	COLD-FORMED METAL FRAMING
CFS	COLD-FORMED STEEL
CIP	CAST IN PLACE
CJ	CONTROL JOINT
CJP	COMPLETE JOINT PENETRATION
CL	CENTERLINE
CLR	CLEAR
CMU	CONCRETE MASONRY UNIT
COL	COLUMN
CONC	CONCRETE
COND	CONDITION
CONN	CONNECT, CONNECTION
CONST	CONSTRUCTION
CONT	CONTINUOUS
CONTR	CONTRACTOR
COORD	COORDINATE
COR	CORNER
CSA	CONCRETE SCREW ANCHOR
CWB	CAPILLARY WATERBARRIER
D	DEEP, DEPTH
DEG	DEGREE
DEM	DEMOLISH, DEMOLITION
DEP	DEPRESSED
DET	DETAIL
DIA	DIAMETER
DIAG	DIAGONAL
DL	DEADLOAD
DN	DOWN
DO	DITTO
DT	DRAG TRUSS
DWG(S)	DRAWINGS
DWL	DOWEL
EA	EACH
EF	EACHFACE
ELEC	ELECTRICAL
ELEV	ELEVATION
EN	EDGE NAIL
EOD	EDGE OF DECK
EOS	EDGE OF SLAB
EQN	EQUATION
EQUIP	EQUIPMENT
ES	EACH SIDE
EW	EACH WAY
EXIST	EXISTING
EXP JT (EJ)	EXPANSION JOINT
EXT	EXTERNAL, EXTERIOR
FF	FAR FACE
FFE	FINISH FLOOR ELEVATION
FG	FINISH GRADE
FJ	FLOOR JOIST
FMG	FRAMING
FN	FIELD NAIL
FND	FOUNDATION
FOC	FACE OF CONCRETE
FOM	FACE OF MASONRY
FOS	FACE OF STEEL
FOW	FACE OF WALL
FS	FAR SIDE
FT, '	FOOT
Fy	YIELD STRESS
GA	GAUGE
GALV	GALVANIZED
GB	GRADE BEAM
GLB	GLUED LAMINATED BEAM
GSN	GENERAL STRUCTURAL NOTES
GT	GIRDER TRUSS
GUSS	GUSSET
GYP BD	GYPSUM BOARD
HD	HOLD DOWN
HDE	HIGH DENSITY POLYETHYLENE
HDR	HEADER
HGR	HANGER
HK	HOOK
HORIZ	HORIZONTAL
HP	HIGH POINT
HSS	HOLLOW STRUCTURAL SECTION
HT	HEIGHT
HVAC	HEATNG/ VENTILATING/ AIR CONDITIONING
I	MOMENT OF INERTIA
IAW	IN ACCORDANCE WITH
IBC	INTERNATIONAL BUILDING CODE
ICF	INSULATED CONCRETE FORM
ID	INSIDE DIAMETER
IN, "	INCH
INCL	INCLUDE
INFO	INFORMATION
INS	INSULATED, INSULATION
JST	JOIST
K, KIPS	THOUSAND POUNDS
L	LENGTH, ANGLE
LB, LBS	POUND/ POUNDS
LG	LONG
LL	LIVE LOAD
LLH	LONG LEG HORIZONTAL
LLV	LONG LEG VERTICAL
LOC	LOCATE, LOCATION
LONG	LONGITUDINAL
LP	LOW POINT
LW	LIGHT WEIGHT
MAS	MASONRY
MATL	MATERIAL
MB	MACHINE BOLT
MBR	MEMBER
MCJ	MASONRY CONTROL JOINT
MECH	MECHANICAL
MED	MEDIUM
MEZZ	MEZZANINE
MF	MOMENT FRAM
MFG	MANUFACTURING
MFR(S)	MANUFACTURER
MIN	MINIMUM
MO	MASONRY OPENING
MOD	MODIFY, MODIFIED
MRF	MANUFACTURER
N/A	NOT APPLICABLE
NEG	NEGATIVE
NF	NEAR FACE
NOM	NOMINAL
NS	NEAR SIDE
NTS	NOT TO SCALE
OC	ON CENTER
OD	OUTSIDE DIAMETER
OH	OPPOSITE HAND, OVERHEAD
OPNG	OPENING
OPP	OPPOSITE
OWSJ	OPEN WEB STEEL JOIST
P/C	PIN CONNECTED
PAR	PARALLEL
PCC	PRECAST CONCRETE
PCF	POUNDS PER CUBIC FOOT
PEMB	PRE-ENGINEERED METAL BUILDING
PEN	PENETRATION
PERP	PERPENDICULAR
PFJ	PERIMETER FELT JOINT
PL	PLATE
PLYWD	PLYWOOD
PNL	PANEL
POS	POSITIVE
PREFAB	PREFABRICATED
PSF	POUNDS PER SQUARE FOOT
PSI	POUNDS PER SQUARE INCH
PT	PRESSURE TREATED, POINT, PRETENSIONED
R	RADIUS
REINF	REINFORCING, REINFORCED
REQD	REQUIRED
RET	RETURN, RETAINING
REV	REVISION, REVISED
RF	ROOF
RFT	RAFTERS
RPM	REVOLUTIONS PR MINUTE
RS	ROUGH SAWN
RT	ROOF TRUSS
S	SECTION MODULUS
SAD	SEE ARCHITECTURAL DRAWINGS
SC	SLIP CRITICAL
SCBRW	SEGMENTAL CONCRETE BLOCK RETAINING WALL
SCHED	SCHEDULE
SDI	STEEL DECK INSTITUTE
SECT	SECTION
SEIS	SEISMIC
SEP	SEPARATION
SF	STEP FOUNDATION
SHT	SHEET
SIM	SIMILAR
SJI	STEEL JOIST INSTITUTE
SLL	SUPER-IMPOSED LIVE LOAD
SMS	SHEET METAL SCREW
SPA	SPACE, SPACED
SPEC(S)	SPECIFICATION(S)
SPRT	SUPPORT
SQ	SQUARE
SS	STAINLESS STEEL
ST	SNUG TIGHT
STD	STANDARD
STIF/STIFF	STIFFENER
STL	STEEL
STRUCT	STRUCTURAL, STRUCTURE
SUSP	SUSPENDED
SYM	SYMMETRICAL
T&B	TOP AND BOTTOM
T&G	TONGUE AND GROOVE
T/	TOP OF
TEMP	TEMPERATURE, TEMPORARY
TGB	TOP OF GRADE BEAM
THK	THICK, THICKNESS
TL	TOTAL LOAD
TN	TOE NAIL
TOB	TOP OF BEAM
TOC	TOP OF CONCRETE
TOD	TOP OF DECK
TOF	TOP OF FOUNDATION
TOS	TOP OF STEEL
TOW	TOP OF WALL
TSE	THICKENED SLAB EDGE
TYP	TYPICAL
UFC	UNITED FACILITES CRITERIA
UNO	UNLESS NOTED OTHERWISE
UON	UNLESS OTHERWISE NOTED
VB	VAPOR BARRIER
VERT	VERTICAL
W	WIDTH, WEST, WIDE FLANGE
W/	WITH
W/O	WITHOUT
WF	WIDE FLANGE
WPT	WORKING POINT
WWR	WELDED WIRE REINFORCEMENT
x	BY, TIMES

LOCATION OF INFORMATION :

1. FOR MATERIAL STRENGTHS, SEE GENERAL STRUCTURAL NOTES.
2. VERIFY ALL DIMENSIONS WITH ARCHITECTURAL DRAWINGS PRIOR TO START OF CONSTRUCTION - RESOLVE ANY DISCREPANCIES WITH ARCHITECT.
3. FOR CLARITY, ALL EXTERIOR SLABS AND SIDEWALKS MAY NOT BE SHOWN. FOR EXACT DIMENSIONS, LOCATIONS, JOINT AND SCORE LINES, SEE CIVIL DRAWINGS.
4. FOR CLARITY, ALL OPENINGS MAY NOT BE SHOWN ON FRAMING PLANS. FOR EXACT SIZE, NUMBER, AND LOCATION OF OPENINGS, SEE ARCHITECTURAL, MECHANICAL, ELECTRICAL AND PLUMBING DRAWINGS. FOR FRAMING AT OPENINGS, SEE TYPICAL STRUCTURAL DETAILS. VERIFY ALL SIZES, WEIGHTS AND LOCATIONS OF MECHANICAL EQUIPMENT WITH MECHANICAL ENGINEER AND MECHANICAL CONTRACTOR THROUGH ARCHITECT.
5. DETAILS MARKED "TYPICAL" MAY NOT BE CUT ON PLANS.
6. CJ - AS SHOWN ON PLAN INDICATES LOCATION OF EITHER KEYED OR SAW CUT CONTROL JOINT IN SLAB ON GRADE AT CONTRACTOR'S OPTION, SEE GENERAL STRUCTURAL NOTES AND PLANS.
7. MJ - AS SHOWN ON PLAN INDICATES MASONRY CONTROL JOINT IN MASONRY WALL, SEE GENERAL STRUCTURAL NOTES AND TYPICAL DETAILS.
8. FOR CLARITY, DETAILS MAY SHOW ONLY ONE SIDE OF FRAMING CONDITION.
9. CONTRACTOR TO VERIFY, AND BE RESPONSIBLE FOR VARIATIONS IN CONCRETE QUANTITY DUE TO CAMBER, CONSTRUCTION DEAD LOAD DEFLECTIONS AND/OR TOLERANCES OF STRUCTURAL STEEL ELEMENTS (i.e. BEAMS, JOISTS, COMPOSITE JOISTS & BEAMS, STEEL DECK, ETC.) AND PRECAST CONCRETE ELEMENTS.
10. ALL SCHEDULE MARK DESIGNATIONS MAY NOT NECESSARILY BE FOUND ON THE PLANS WHERE THE SCHEDULES OCCUR. SCHEDULES ARE TYPICAL TO THE PROJECT.

GENERAL SYMBOLS

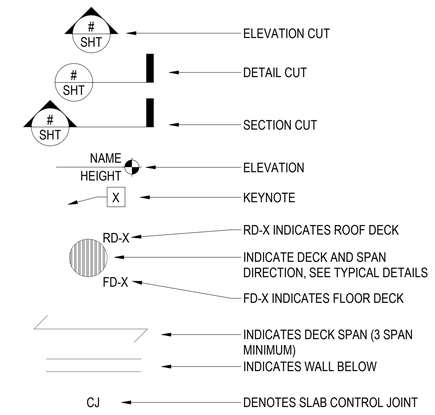

DESIGN BY:									
DRAWN BY:									
CHECKED BY:									
APPROVED BY:		4	7/03/2023	ISSUED FOR BID					
CDOT/APPROVED BY:		0	9/9/2022	ISSUED FOR PERMIT	MMB	MDG	MJT		
		NO.	DATE	REVISIONS	DES.	DRW.	CHK.	DCCO	CDOT

TRANSYSTEMS
222 SOUTH RIVERSIDE PLAZA SUITE 610
CHICAGO, ILLINOIS 60606

SKIDMORE, OWINGS & MERRILL LLP
224 SOUTH MICHIGAN AVENUE, SUITE 1000
CHICAGO, ILLINOIS 60604

CHICAGO DEPARTMENT OF TRANSPORTATION
DIVISION OF ENGINEERING

STATE / LAKE LOOP ELEVATED STATION
200 NORTH STATE STREET, CHICAGO, IL 60601

GENERAL STRUCTURAL NOTES (4 OF 4)

CDOT PROJECT D-1-209

DATE: 9/9/2022

SPEC. NO.

DRAWING NO. SS-004

REVISION NO.4

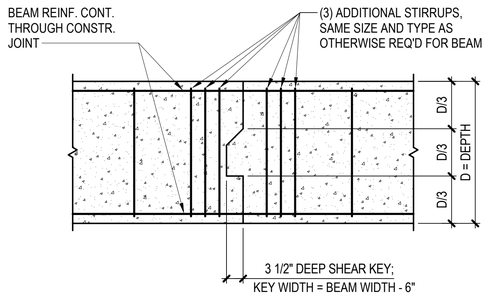

BEAM CONSTRUCTION JOINT
1 TYPICAL DETAIL
SCALE: NO SCALE

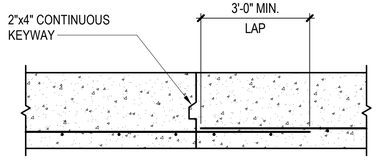

SPREAD FOOTING CONSTRUCTION JOINT
2 TYPICAL DETAIL
SCALE: NO SCALE

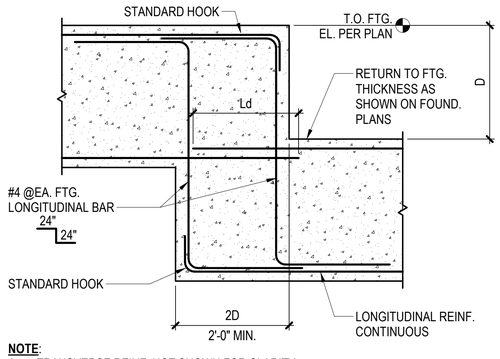

NOTE:
1. TRANSVERSE REINF. NOT SHOWN FOR CLARITY.

GRADE BEAM STEP
3 TYPICAL DETAIL
SCALE: NO SCALE

NOTES:
1. SEE PLAN FOR FOOTING SIZE & REINFORCING.
2. S = STEP IN FOOTING (TOP & BOTTOM), 2'-0" MAX.
   H = DEPTH OF FOOTING

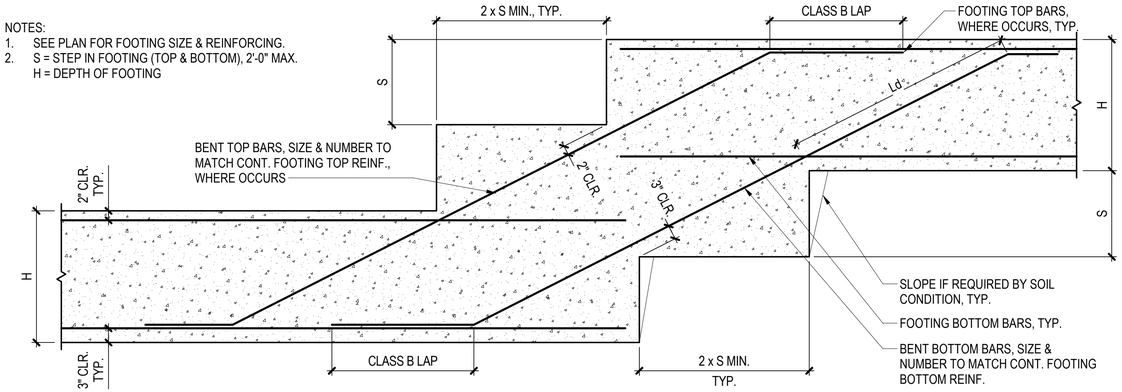

SPREAD FOOTING STEP
4 TYPICAL DETAIL
SCALE: NO SCALE

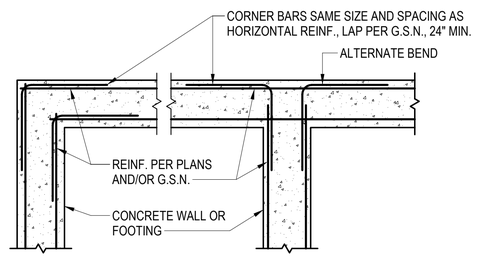

CORNER **INTERSECTION**

NOTE:
1. VERTICAL REINFORCEMENT NOT SHOWN FOR CLARITY.

5 FOOTING OR CONC. WALL DOUBLE CORNER REINF.
3/4" = 1'-0"

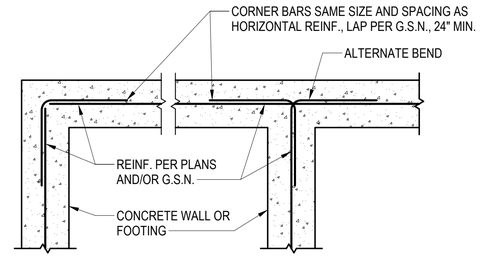

CORNER **INTERSECTION**

NOTE:
1. VERTICAL REINFORCEMENT NOT SHOWN FOR CLARITY.

6 FOOTING OR CONCRETE WALL CORNER REINF.
3/4" = 1'-0"

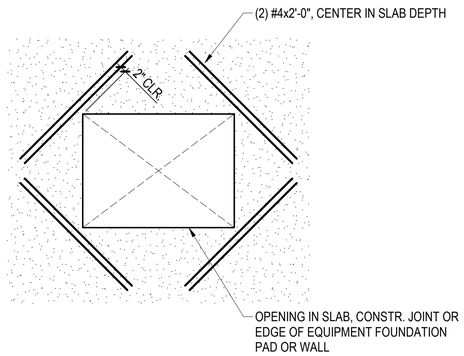

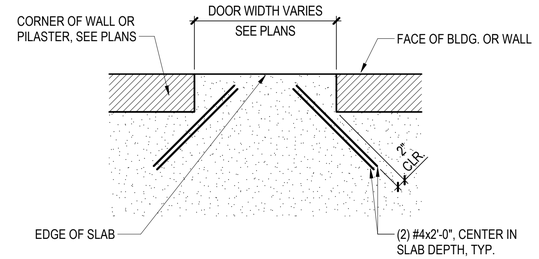

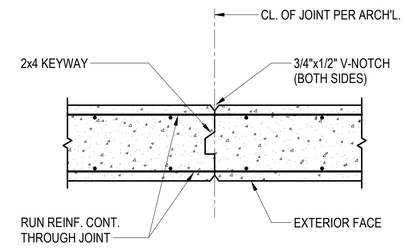

VERT. OR HORIZ. WALL CONSTRUCTION JOINT
7 TYPICAL DETAIL
SCALE: NO SCALE

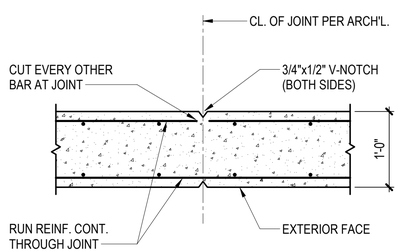

WALL CONTROL JOINT
8 TYPICAL DETAIL
SCALE: NO SCALE

SLAB CORNER BAR
9 TYPICAL DETAIL
SCALE: NO SCALE

SLAB RE-ENTRANT BAR
10 TYPICAL DETAIL
SCALE: NO SCALE

DESIGN BY:									
DRAWN BY:									
CHECKED BY:									
APPROVED BY:		4	7/03/2023	ISSUED FOR BID					
CDOT/APPROVED BY:		0	9/9/2022	ISSUED FOR PERMIT	MMB	MDG	MJT		
		NO.	DATE	REVISIONS	DES.	DRW.	CHK.	DCCO	CDOT

TRANSYSTEMS
222 SOUTH RIVERSIDE PLAZA SUITE 610
CHICAGO, ILLINOIS 60606

SKIDMORE, OWINGS & MERRILL LLP
224 SOUTH MICHIGAN AVENUE, SUITE 1000
CHICAGO, ILLINOIS 60604

CHICAGO DEPARTMENT OF TRANSPORTATION
DIVISION OF ENGINEERING

STATE / LAKE LOOP ELEVATED STATION
200 NORTH STATE STREET, CHICAGO, IL 60601

TYPICAL CONCRETE DETAILS (1 OF 3)

CDOT PROJECT D-1-209 | DATE: 9/9/2022

SPEC. NO.

DRAWING NO. SS-010

REVISION NO.4

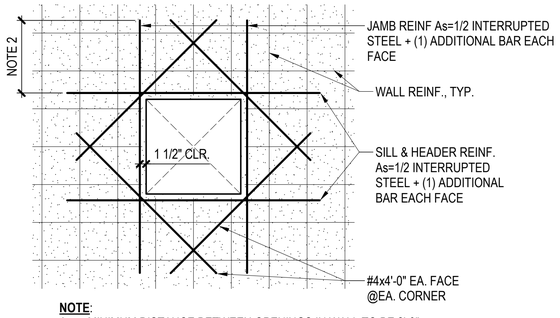

NOTE:
1. MINIMUM DISTANCE BETWEEN OPENINGS IN WALL TO BE 2'-0".
2. CLASS B SPLICE OR 2'-6" MIN. WHICHEVER IS GREATER.

CONCRETE WALL & FLOOR SLAB SQUARE PENETRATION
1 TYPICAL DETAIL
SCALE: NO SCALE

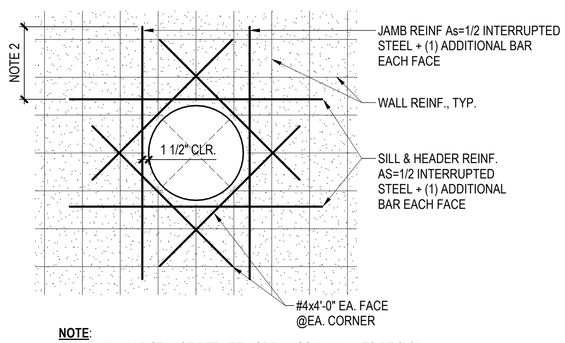

NOTE:
1. MINIMUM DISTANCE BETWEEN OPENINGS IN WALL TO BE 2'-0".
2. CLASS B SPLICE OR 2'-6" MIN. WHICHEVER IS GREATER.

CONCRETE WALL ROUND PENETRATION
2 TYPICAL DETAIL
SCALE: NO SCALE

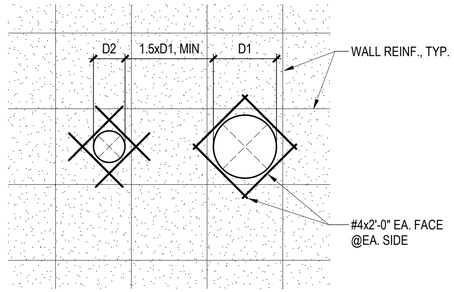

NOTE:
1. FOR SLEEVES > 10" REFERENCE TYPICAL WALL PENETRATION DETAIL.

CONCRETE WALL PIPE PENETRATION
3 TYPICAL DETAIL
SCALE: NO SCALE

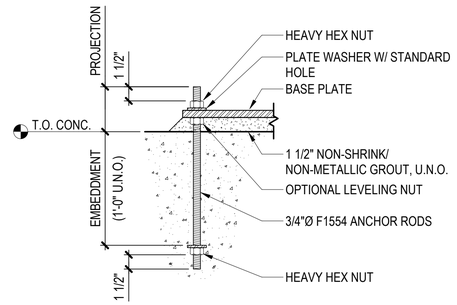

BASE PLATE ANCHOR BOLT
4 TYPICAL DETAIL
SCALE: NO SCALE

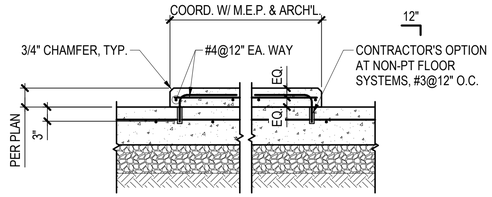

NOTES:
1. RE: GENERAL STRUCTURAL NOTES FOR SLAB BEARING MATERIAL REQUIREMENTS.
2. HOUSEKEEPING PADS ARE NOT TO BE CAST UNTIL SLAB ON GRADE HAS REACHED DESIGNED COMPRESSIVE STRENGTH. CONTRACTOR TO COORD. ANCHORAGE REQUIREMENTS FOR PARTICULAR EQUIPMENT SUPPLIED.
3. DRILL AND EPOXY DOWEL OPTION SHALL NOT BE USED AT PT SLABS OR BEAMS.
4. DRILL AND EPOXY 3" MINIMUM INTO SLAB W/ HY 200 SD ADHESIVE OR APPROVED EQUAL.

HOUSEKEEPING PAD - DRILL & EPOXY DOWELS
5 TYPICAL DETAIL
SCALE: NO SCALE

NO.	DATE	REVISIONS	DES.	DRW.	CHK.	DCCO	CDOT
4	7/03/2023	ISSUED FOR BID					
0	9/9/2022	ISSUED FOR PERMIT	MMB	MDG	MJT		

DESIGN BY: | DRAWN BY: | CHECKED BY: | APPROVED BY: | CDOT/APPROVED BY:

TRANSYSTEMS
222 SOUTH RIVERSIDE PLAZA SUITE 610
CHICAGO, ILLINOIS 60606

SKIDMORE, OWINGS & MERRILL LLP
224 SOUTH MICHIGAN AVENUE, SUITE 1000
CHICAGO, ILLINOIS 60604

STATE OF ILLINOIS — ANNA M. NUKES — 062-071880 — LICENSED PROFESSIONAL ENGINEER

CHICAGO DEPARTMENT OF TRANSPORTATION
DIVISION OF ENGINEERING

STATE / LAKE LOOP ELEVATED STATION
200 NORTH STATE STREET, CHICAGO, IL 60601

TYPICAL CONCRETE DETAILS (2 OF 3)

CDOT PROJECT D-1-209 | DATE: 9/9/2022

SPEC. NO.

DRAWING NO. SS-011

REVISION NO.4

CONCRETE REINFORCING DEVELOPMENT LENGTHS (TENSION SPLICE) SCHEDULE

GRADE 60 REINFORCING (Fy=60 KSI)

BAR SIZE	CONCRETE STRENGTH (PSI)											
	3000		4000		5000		6000		7000		8000	
	ℓd	1.3 ℓd	ℓd	1.3 ℓd	ℓd	1.3 ℓd	ℓd	1.3 ℓd	ℓd	1.3 ℓd	ℓd	1.3 ℓd
3	17	22	15	20	13	17	12	16	12	16	12	16
4	22	29	19	25	17	22	16	21	15	20	14	19
5	28	37	24	31	22	29	20	26	18	24	17	22
6	33	43	29	38	26	34	24	32	22	29	21	28
7	48	63	42	55	37	48	34	45	32	42	30	39
8	54	70	48	62	43	56	39	51	36	47	34	45
9	62	81	54	70	48	62	45	59	40	52	38	50
10	68	88	60	78	53	69	49	64	45	59	42	55
11	76	99	65	85	58	76	54	70	50	65	46	60

NOTES:
1. MULTIPLY VALUES IN TABLE BY 1.3 FOR HORIZONTAL BARS PLACED SUCH THAT MORE THAN 12" OF FRESH CONCRETE IS CAST BELOW BARS.
2. MULTIPLY VALUES IN TABLE BY 1.3 FOR LW CONCRETE.
3. MULTIPLY VALUES IN TABLE BY 1.5 FOR COVER LESS THAN Db AND CLEAR SPACING LESS THAN 2Db.
4. MULTIPLY VALUES IN TABLE BY 1.2 FOR EPOXY COATED BARS.

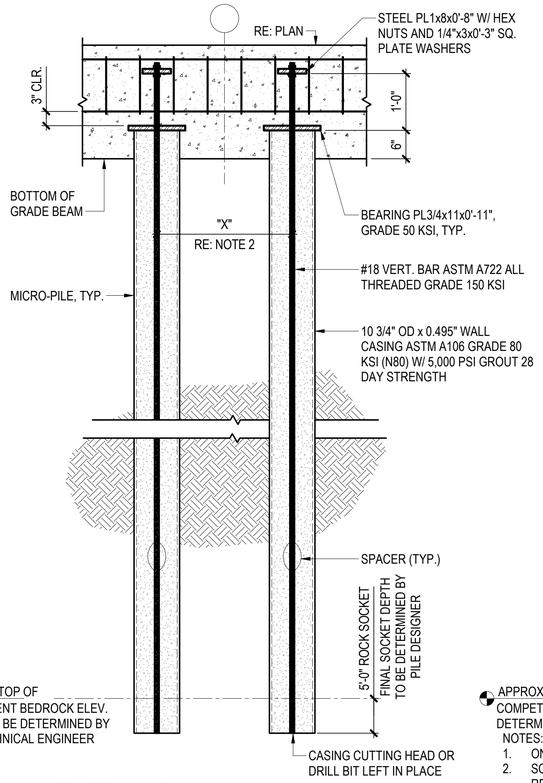

NOTES:
1. RE: 2/SS-012 FOR ADDITIONAL INFO.
2. "X" = DIMENSION BETWEEN CENTER LINE OF PILES AT BOTTOM OF FOOTING 3'-0" MIN.
3. FIRST CONNECTION SHALL BE AT LEAST MINIMUM 20 FEET BELOW BOTTOM OF GRADE BEAM WITH INTERNAL FLUSH COUPLE THREADED CONNECTION.
4. PROVIDE MECHANICAL COUPLER CONNECTION TO SPLICE THE VERTICAL BAR.

1 TYPICAL VERTICAL MICRO-PILE SECTION
3/4" = 1'-0"

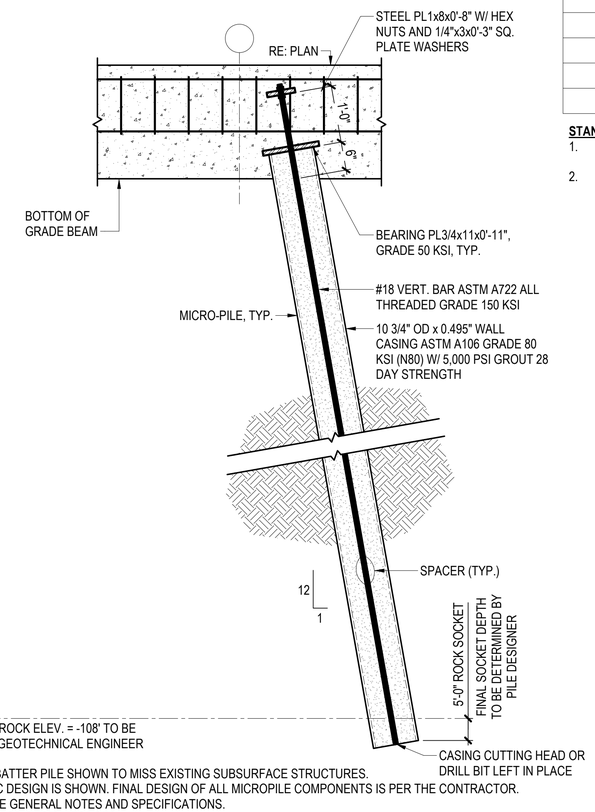

NOTES:
1. ONE-WAY BATTER PILE SHOWN TO MISS EXISTING SUBSURFACE STRUCTURES.
2. SCHEMATIC DESIGN IS SHOWN. FINAL DESIGN OF ALL MICROPILE COMPONENTS IS PER THE CONTRACTOR. REFERENCE GENERAL NOTES AND SPECIFICATIONS.
3. RE: SS-001 FOR DESIGN FORCES.
4. HEX NUT AND STEEL PLATE SIZE TO BE DETERMINED BY PILE CONTRACTOR. PLATE SHALL BE SUFFICIENT TO DEVELOP VERTICAL BAR. PROVIDE MINIMUM PLATE 1"X12"X1'-0" GRADE A36 WITH 1/2" THICK PLATE WASHERS 4"x4" TOP AND BOTTOM OF PLATE.
5. PROVIDE MECHANICAL COUPLER CONNECTION TO SPLICE THE VERTICAL BAR.

2 TYPICAL BATTER MICRO-PILE SECTION
3/4" = 1'-0"

STANDARD HOOK DEVELOPMENT LENGTH, "Ldh"

BAR SIZE	"D"	"G" 90 HOOK	"J" 180 HOOK	NORMAL WEIGHT			LIGHT WEIGHT		
				3000 PSI	4000 PSI	5000 PSI	3000 PSI	4000 PSI	5000 PSI
#3	2 1/4"	6"	3"	0' -9"	0' -8"	0' -7"	0' -11"	0' -10"	0' -9"
#4	3"	8"	4"	0' - 11"	0' - 10"	0' - 9"	1' - 3"	1' - 1"	1' - 0"
#5	3 3/4"	10"	5"	1' - 2"	1' - 0"	0' - 11"	1' - 6"	1' - 4"	1' - 2"
#6	4 1/2"	12"	6"	1' - 5"	1' - 3"	1' - 1"	1' - 10"	1' - 7"	1' - 5"
#7	5 1/4"	1' - 2"	7"	1' - 8"	1' - 5"	1' - 3"	2' - 1"	1' - 10"	1' - 8"
#8	6"	1'- 4"	8"	1' - 10"	1' - 7"	1' - 5"	2' - 5"	2' - 1"	1' - 11"
#9	9 1/2"	1' - 7 1/2"	11 3/4"	2' - 1"	1' - 10"	1' - 8"	2' - 9"	2' - 4"	2' - 1"
#10	10 3/4"	1' - 10"	1' - 1 1/4"	2' - 4"	2' - 1"	1' - 10"	3' - 1"	2' - 8"	2' - 5"
#11	12"	2' -0 1/2"	1' - 2 1/4"	2' - 7"	2' - 3"	2' - 0"	3' - 5"	2' - 11"	2' - 8"

STANDARD HOOK NOTES:
1. ALL HOOK BARS SHALL EXTEND AS FAR AS POSSIBLE WITH A MINIMUM 2" END COVER AND WITH EMBEDMENT NOT LESS THAN SHOWN ON THE SCHEDULE U.N.O. ON PLANS.
2. 2. MINIMUM SIDE COVER =2 1/2"

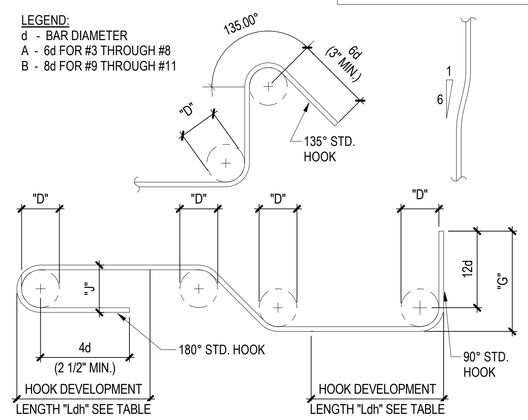

DESIGN BY:									
DRAWN BY:		4	7/03/2023	ISSUED FOR BID					
CHECKED BY:		2	1/13/2023	ISSUED FOR PERMIT REVISION 2					
APPROVED BY:		1	11/04/2022	ISSUED FOR PERMIT REVISION 1					
CDOT/APPROVED BY:		0	9/9/2022	ISSUED FOR PERMIT	MMB	MDG	MJT		
		NO.	DATE	REVISIONS	DES.	DRW.	CHK.	DCCO	CDOT

TRANSYSTEMS
222 SOUTH RIVERSIDE PLAZA SUITE 610
CHICAGO, ILLINOIS 60606

SKIDMORE, OWINGS & MERRILL LLP
224 SOUTH MICHIGAN AVENUE, SUITE 1000
CHICAGO, ILLINOIS 60604

CHICAGO DEPARTMENT OF TRANSPORTATION
DIVISION OF ENGINEERING

STATE / LAKE LOOP ELEVATED STATION
200 NORTH STATE STREET, CHICAGO, IL 60601

TYPICAL CONCRETE DETAILS (3 OF 3)

SPEC. NO.

DRAWING NO. SS-012

CDOT PROJECT D-1-209

DATE: 9/9/2022

REVISION NO.4

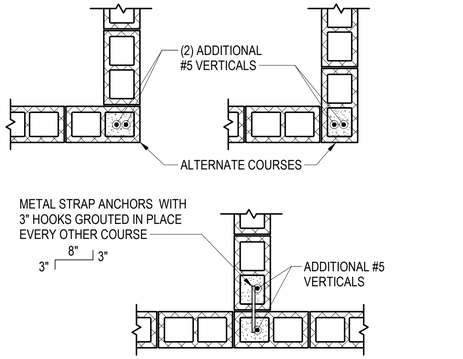

MASONRY WALL INTERSECTION
1 TYPICAL DETAIL
SCALE: NO SCALE

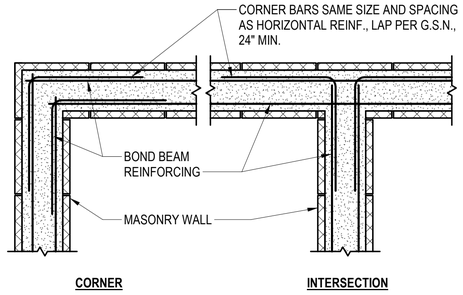

NOTE:
1. VERTICAL REINFORCEMENT NOT SHOWN FOR CLARITY.

MASONRY WALL CORNER REINF.
2 TYPICAL DETAIL
SCALE: NO SCALE

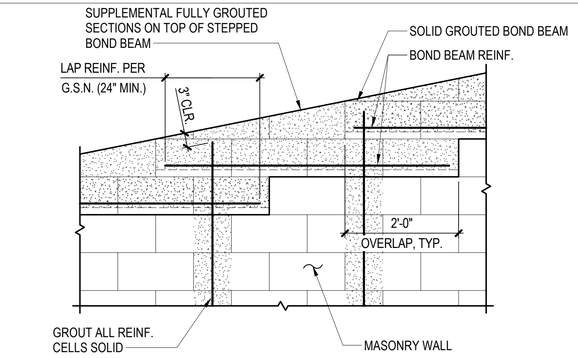

STEPPED BOND BEAM
3 TYPICAL DETAIL
SCALE: NO SCALE

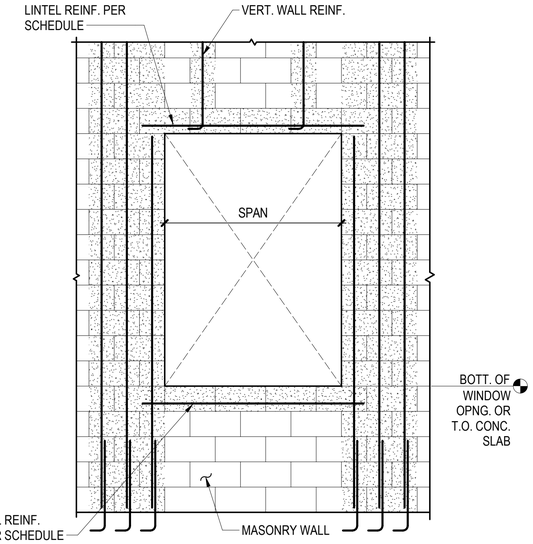

MASONRY LINTEL SCHEDULE

SPAN	LINTEL		SILL		JAMB CELL	
	DEPTH	REINFORCING	DEPTH	REINFORCING	WIDTH	REINFORCING
< 4'-0"	16"	(2) #6 EA. COURSE	8	(2) #5 EA. COURSE	16"	(2) #5 EA. COURSE
4'-0" THRU 10'-4" WITHOUT BRICK	24"	(2) #6 EA. COURSE	16"	(2) #5 EA. COURSE	32"	(2) #5 EA. COURSE
4'-0" THRU 10'-4" WITH BRICK/ GLAZED TILE	8/SS-020	8/SS-020	16"	(2) #5 EA. COURSE	32"	(2) #5 EA. COURSE

NOTES:
1. PROVIDE SMOOTH COPPER BOND BARRIER UNDER LINTEL BEARING AREA ON THE CONTROL JOINT SIDE.

2. HORIZONTAL JOINT REINF. NOT SHOWN FOR CLARITY.

MASONRY WALL OPENING
4 TYPICAL DETAIL
SCALE: NO SCALE

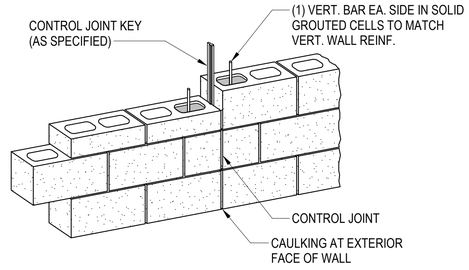

NOTES:
1. USE OF CONTROL JOINT BLOCK OR RUBBER LIKE MATERIAL, KEY AND SASH BLOCK IS CONTRACTOR'S OPTION.
2. REFER TO ARCHITECTURAL FOR LOCATION AND EXTENTS OF CONTROL JOINT.
3. HORIZONTAL JOINT REINFORCEMENT SHALL BE DISCONTINUOUS AT CONTROL JOINTS.
4. CONTINUE BOND BEAM REINF. THROUGH JOINT, WRAP BARS W/ MASTIC FOR BOND BREAK.
5. BOND BEAM REINF. SHALL NOT BE LAPPED WITHIN 8'-0" OF CONTROL JOINT.

MASONRY WALL CONTROL JOINT
5 TYPICAL DETAIL
SCALE: NO SCALE

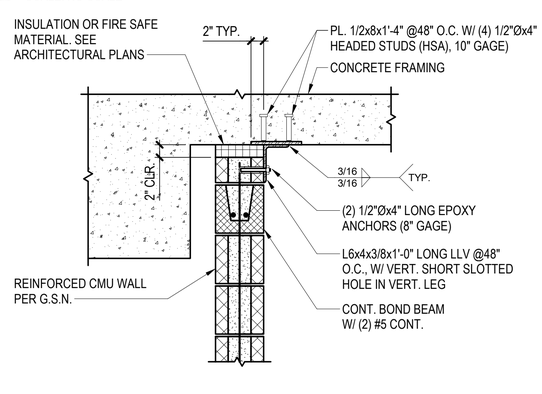

ONE SIDED MASONRY WALL SUPPORT
6 TYPICAL DETAIL
SCALE: NO SCALE

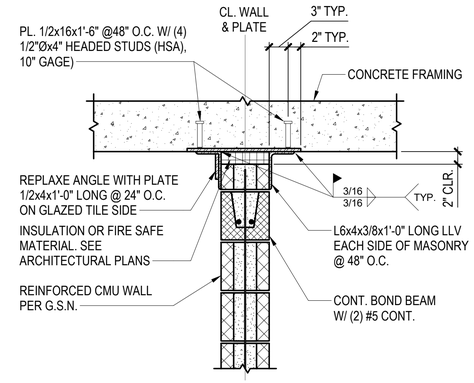

TWO SIDED MASONRY WALL SUPPORT
7 TYPICAL DETAIL
SCALE: NO SCALE

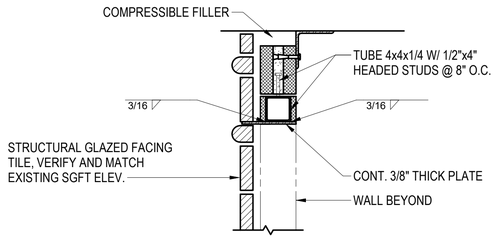

NOTES:
1. TUBE SHALL EXTEND 8 INCHES BEYOND THE OPENING WIDTH ON EITHER SIDE.
2. END OF TUBES SHALL BE WELDED WITH 3/16" FIELD WELD TO EMBED PLATE 3/8x6x8 W/ (2) 1/2"Ø HEADED STUDS INTO WALL AT 4" GAUGE.
3. PROVIDE SOAPS ON EITHER SIDE OF THE TUBE SUPPORTED ON CONTINUOUS PLATE.

BRICK/GLAZED TILE LINTEL OVER OPENING
8 TYPICAL DETAIL
SCALE: NO SCALE

DESIGN BY:										
DRAWN BY:										
CHECKED BY:										
APPROVED BY:		4	7/03/2023	ISSUED FOR BID						
CDOT/APPROVED BY:		0	9/9/2022	ISSUED FOR PERMIT	MMB	MDG	MJT			
		NO.	DATE	REVISIONS	DES.	DRW.	CHK.	DCCO	CDOT	

TRANSYSTEMS
222 SOUTH RIVERSIDE PLAZA SUITE 610
CHICAGO, ILLINOIS 60606

SKIDMORE, OWINGS & MERRILL LLP
224 SOUTH MICHIGAN AVENUE, SUITE 1000
CHICAGO, ILLINOIS 60604

CHICAGO DEPARTMENT OF TRANSPORTATION
DIVISION OF ENGINEERING

STATE / LAKE LOOP ELEVATED STATION
200 NORTH STATE STREET, CHICAGO, IL 60601

TYPICAL MASONRY DETAILS (1 OF 2)

SPEC. NO.

DRAWING NO. SS-020

CDOT PROJECT D-1-209 | DATE: 9/9/2022 | REVISION NO.4

MASONRY WALL NOTES:

1. SEE SHEET SS-002 FOR MASONRY NOTES.
2. SEE PLANS FOR LOCATIONS AND EXTENTS.
3. PROVIDE #9 CONT. TRUSS TYPE JOINT REINFORCING AT 16" O.C VERTICAL IN JOINTS.
4. DO NOT ATTACH MASONRY TO THE STEEL FRAME OR OTHER STRUCTURAL SYSTEMS WHERE THE CONNECTION RESISTS FORCES OR LOADS IN THE PLANE OF THE WALL. ALL MASONRY BRACING CONNECTIONS ARE FOR OUT OF PLANE LOADS ONLY.
5. SCHEDULED REINFORCEMENT REPRESENTS THE NOMINAL MINIMUM REINFORCEMENT REQUIRED. PROVIDE ADDITIONAL REINFORCEMENT AS REQUIRED BY THE DESIGN SPECIFICATION, GENERAL NOTES, TYPICAL DETAILS OR AS SPECIFICALLY IDENTIFIED IN THE CONTRACT DRAWINGS.
6. PROVIDE ADDITIONAL BOND BEAMS AT THE UPPERMOST AND BOTTOMMOST CONTINUOUS COURSE OF MASONRY AT THE TOP OF EACH WALL, AT EACH FLOOR LEVEL AND AT ALL MASONRY BRACING LOCATIONS.
7. FOR STACK BOND MASONRY WALLS PROVIDE BOND BEAMS AT 4'-0" O.C. ALONG THE HEIGHT OF THE WALL. THE BOND BEAM SHALL HAVE (2) #5 CONT. HORIZONTAL REBARS.

MASONRY REINFORCING DEVELOPMENT LENGTHS (TENSION SPLICE) SCHEDULE

BAR SIZE	GRADE 60 REINFORCING (Fy=60 KSI) CONCRETE STRENGTH (PSI)											
	3000		4000		5000		6000		7000		8000	
	ℓd	1.3 ℓd	ℓd	1.3 ℓd	ℓd	1.3 ℓd	ℓd	1.3 ℓd	ℓd	1.3 ℓd	ℓd	1.3 ℓd
3	17	22	15	20	13	17	12	16	12	16	12	16
4	22	29	19	25	17	22	16	21	15	20	14	19
5	28	37	24	31	22	29	20	26	18	24	17	22
6	33	43	29	38	26	34	24	32	22	29	21	28
7	48	63	42	55	37	48	34	45	32	42	30	39
8	54	70	48	62	43	56	39	51	36	47	34	45
9	62	81	54	70	48	62	45	59	40	52	38	50
10	68	88	60	78	53	69	49	64	45	59	42	55
11	76	99	65	85	58	76	54	70	50	65	46	60

NOTES:
1. MULTIPLY VALUES IN TABLE BY 1.3 FOR HORIZONTAL BARS PLACED SUCH THAT MORE THAN 12" OF FRESH CONCRETE IS CAST BELOW BARS. (APPLIES TO BEAM OR WALL REINFORCING)
2. MULTIPLY VALUES IN TABLE BY 1.3 FOR LW CONCRETE.
3. MULTIPLY VALUES IN TABLE BY 1.5 FOR COVER LESS THAN Db AND CLEAR SPACING LESS THAN 2Db.
4. MULTIPLY VALUES IN TABLE BY 1.2 FOR EPOXY COATED BARS.

DESIGN BY:									
DRAWN BY:									
CHECKED BY:									
APPROVED BY:		4	7/03/2023	ISSUED FOR BID					
CDOT/APPROVED BY:		0	9/9/2022	ISSUED FOR PERMIT	MMB	MDG	MJT		
		NO.	DATE	REVISIONS	DES.	DRW.	CHK.	DCCO	CDOT

TRANSYSTEMS
222 SOUTH RIVERSIDE PLAZA SUITE 610
CHICAGO, ILLINOIS 60606

SKIDMORE, OWINGS & MERRILL LLP
224 SOUTH MICHIGAN AVENUE, SUITE 1000
CHICAGO, ILLINOIS 60604

STATE OF ILLINOIS — ANNA M. NUKES — 062-071866 — LICENSED PROFESSIONAL ENGINEER

CHICAGO DEPARTMENT OF TRANSPORTATION
DIVISION OF ENGINEERING

STATE / LAKE LOOP ELEVATED STATION
200 NORTH STATE STREET, CHICAGO, IL 60601

TYPICAL MASONRY DETAILS (2 OF 2)

CDOT PROJECT D-1-209 | DATE: 9/9/2022

SPEC. NO.

DRAWING NO. SS-021

REVISION NO.4

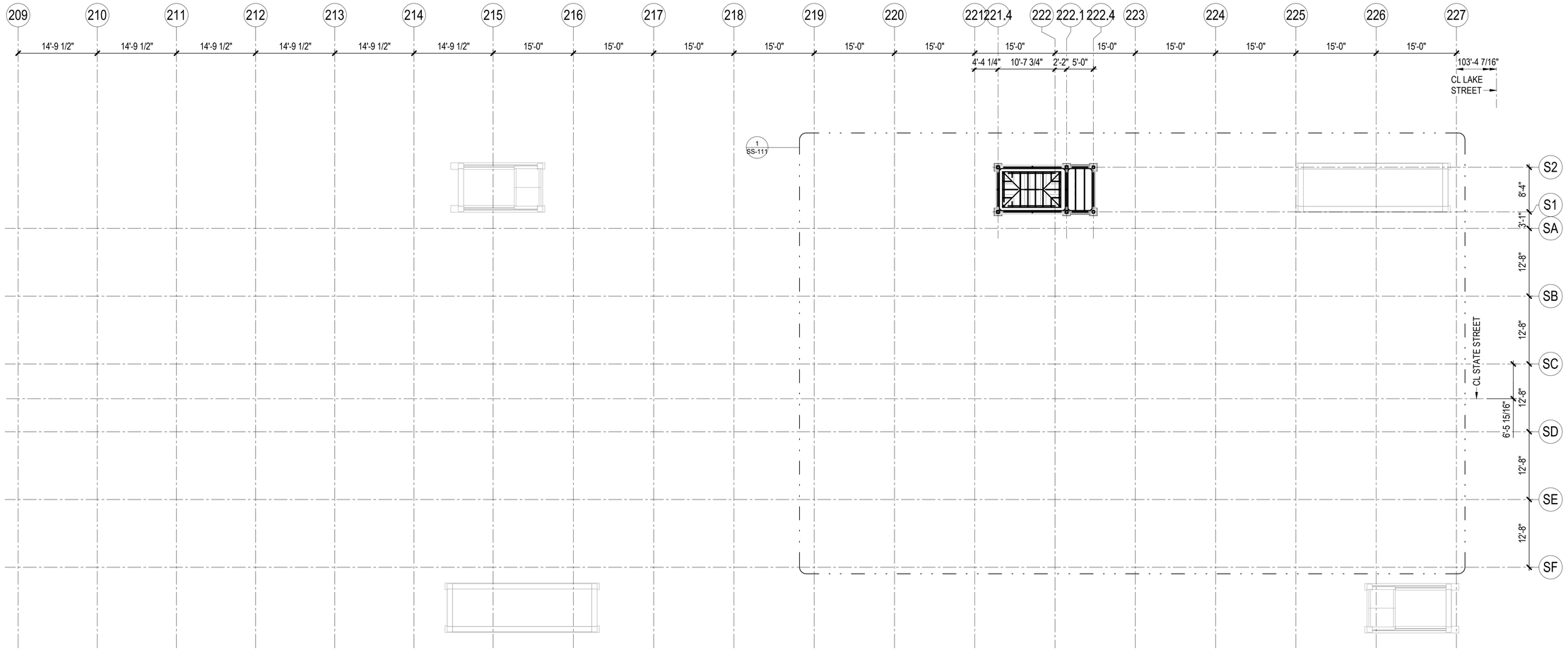

1 SUBWAY STREET LEVEL ROOF PLAN - OVERALL

1" = 10'-0"

DESIGN BY:										
DRAWN BY:		4	7/03/2023	ISSUED FOR BID						
CHECKED BY:		2	1/13/2023	ISSUED FOR PERMIT REVISION 2						
APPROVED BY:		1	11/04/2022	ISSUED FOR PERMIT REVISION 1						
CDOT/APPROVED BY:		0	9/9/2022	ISSUED FOR PERMIT	MMB	MDG	MJT			
		NO.	DATE	REVISIONS	DES.	DRW.	CHK.	DCCO	CDOT	

TranSystems
TRANSYSTEMS
222 SOUTH RIVERSIDE PLAZA SUITE 610
CHICAGO, ILLINOIS 60606

SOM
SKIDMORE, OWINGS & MERRILL LLP
224 SOUTH MICHIGAN AVENUE, SUITE 1000
CHICAGO, ILLINOIS 60604

STATE OF ILLINOIS
ANNA M. DUKE
062-057866
LICENSED ILLINOIS
REGISTERED PROFESSIONAL ENGINEER

CDOT
CHICAGO DEPARTMENT OF TRANSPORTATION
DIVISION OF ENGINEERING

STATE / LAKE LOOP ELEVATED STATION
200 NORTH STATE STREET, CHICAGO, IL 60601

SUBWAY STREET LEVEL ROOF PLAN - OVERALL

CDOT PROJECT D-1-209 | DATE: 9/9/2022

SPEC. NO.

DRAWING NO.
SS-101

REVISION NO.4

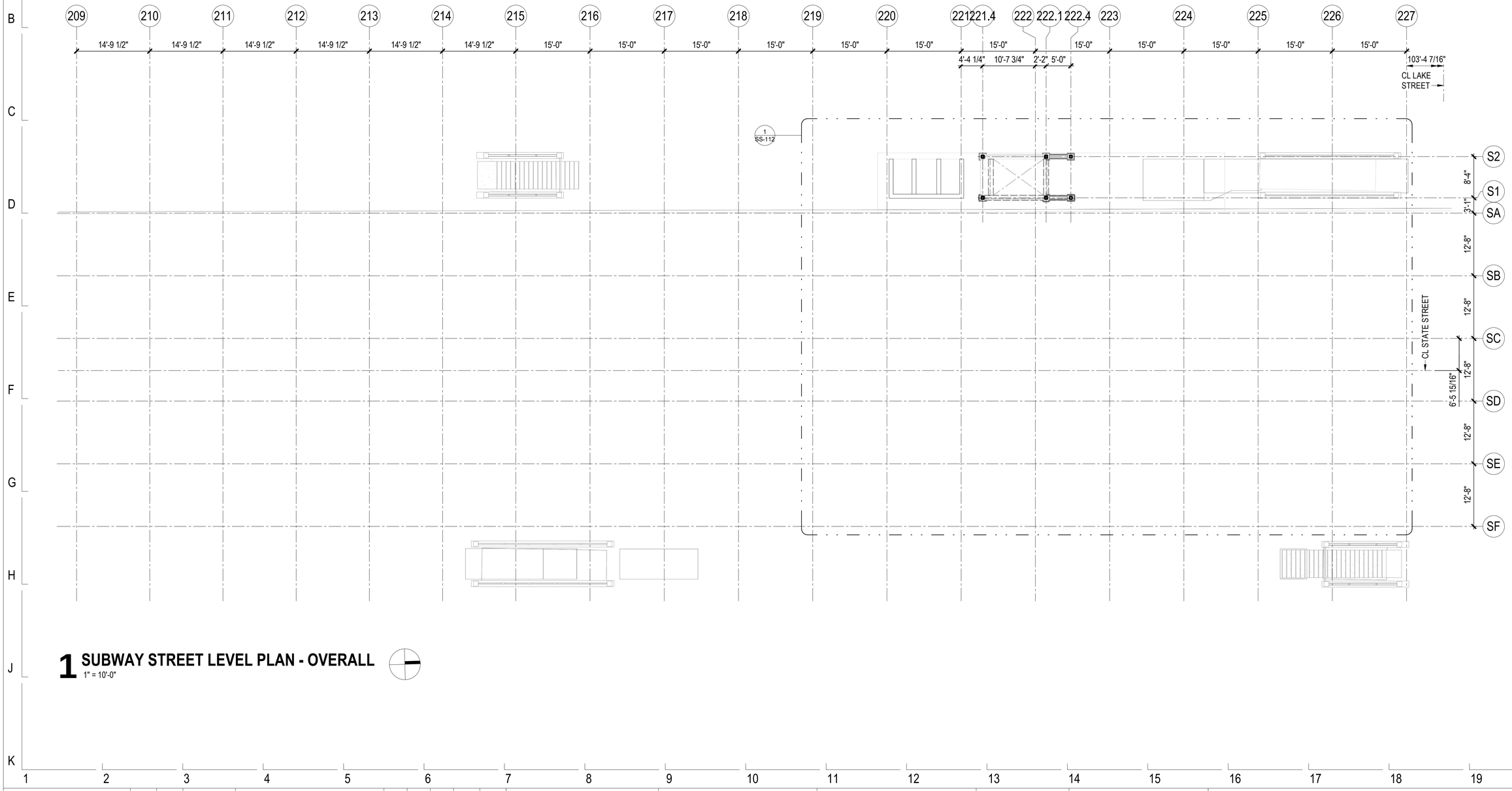

1 SUBWAY STREET LEVEL PLAN - OVERALL

1" = 10'-0"

NO.	DATE	REVISIONS	DES.	DRW.	CHK.	DCCO	CDOT
4	7/03/2023	ISSUED FOR BID					
2	1/13/2023	ISSUED FOR PERMIT REVISION 2					
1	11/04/2022	ISSUED FOR PERMIT REVISION 1					
0	9/9/2022	ISSUED FOR PERMIT	MMB	MDG	MJT		

DESIGN BY:
DRAWN BY:
CHECKED BY:
APPROVED BY:
CDOT/APPROVED BY:

TRANSYSTEMS
222 SOUTH RIVERSIDE PLAZA SUITE 610
CHICAGO, ILLINOIS 60606

SKIDMORE, OWINGS & MERRILL LLP
224 SOUTH MICHIGAN AVENUE, SUITE 1000
CHICAGO, ILLINOIS 60604

CHICAGO DEPARTMENT OF TRANSPORTATION
DIVISION OF ENGINEERING

STATE / LAKE LOOP ELEVATED STATION
200 NORTH STATE STREET, CHICAGO, IL 60601

SUBWAY STREET LEVEL PLAN - OVERALL

CDOT PROJECT D-1-209 | DATE: 9/9/2022

SPEC. NO.

DRAWING NO. SS-102

REVISION NO. 4

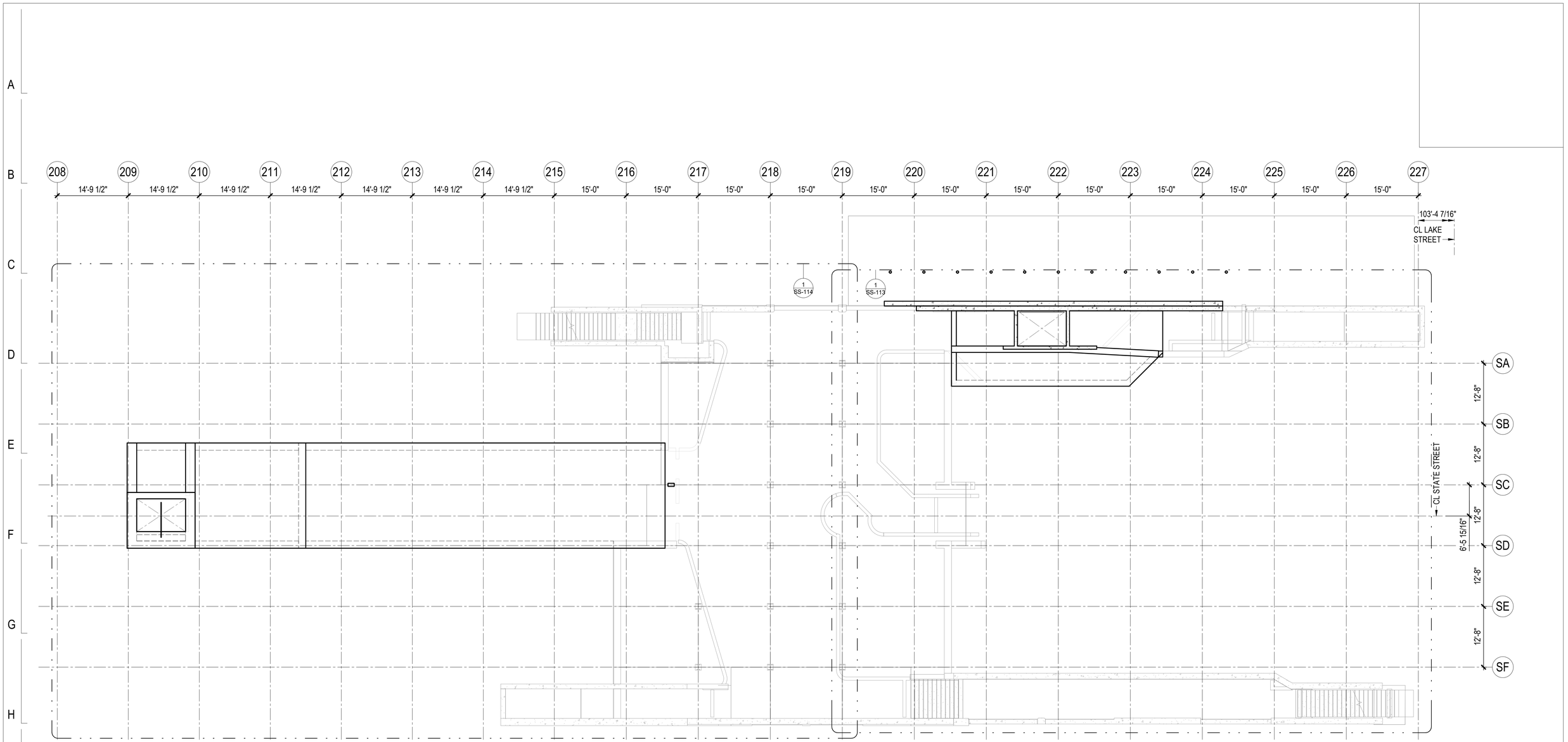

1 SUBWAY MEZZANINE LEVEL ROOF PLAN - OVERALL

1" = 10'-0"

NO.	DATE	REVISIONS	DES.	DRW.	CHK.	DCCO	CDOT
4	7/03/2023	ISSUED FOR BID	MMB	MDG	MJT		
2	1/13/2023	ISSUED FOR PERMIT REVISION 2					
1	11/04/2022	ISSUED FOR PERMIT REVISION 1					
0	9/9/2022	ISSUED FOR PERMIT					

DESIGN BY:
DRAWN BY:
CHECKED BY:
APPROVED BY:
CDOT/APPROVED BY:

TRANSYSTEMS
222 SOUTH RIVERSIDE PLAZA SUITE 610
CHICAGO, ILLINOIS 60606

SKIDMORE, OWINGS & MERRILL LLP
224 SOUTH MICHIGAN AVENUE, SUITE 1000
CHICAGO, ILLINOIS 60604

STATE OF ILLINOIS
ANNA M. DUKES
062-057866
LICENSED
PROFESSIONAL ENGINEER

CHICAGO DEPARTMENT OF TRANSPORTATION
DIVISION OF ENGINEERING

STATE / LAKE LOOP ELEVATED STATION
200 NORTH STATE STREET, CHICAGO, IL 60601

SUBWAY MEZZANINE LEVEL ROOF PLAN - OVERALL

CDOT PROJECT D-1-209

DATE: 9/9/2022

SPEC. NO.

DRAWING NO.
SS-103

REVISION NO.4

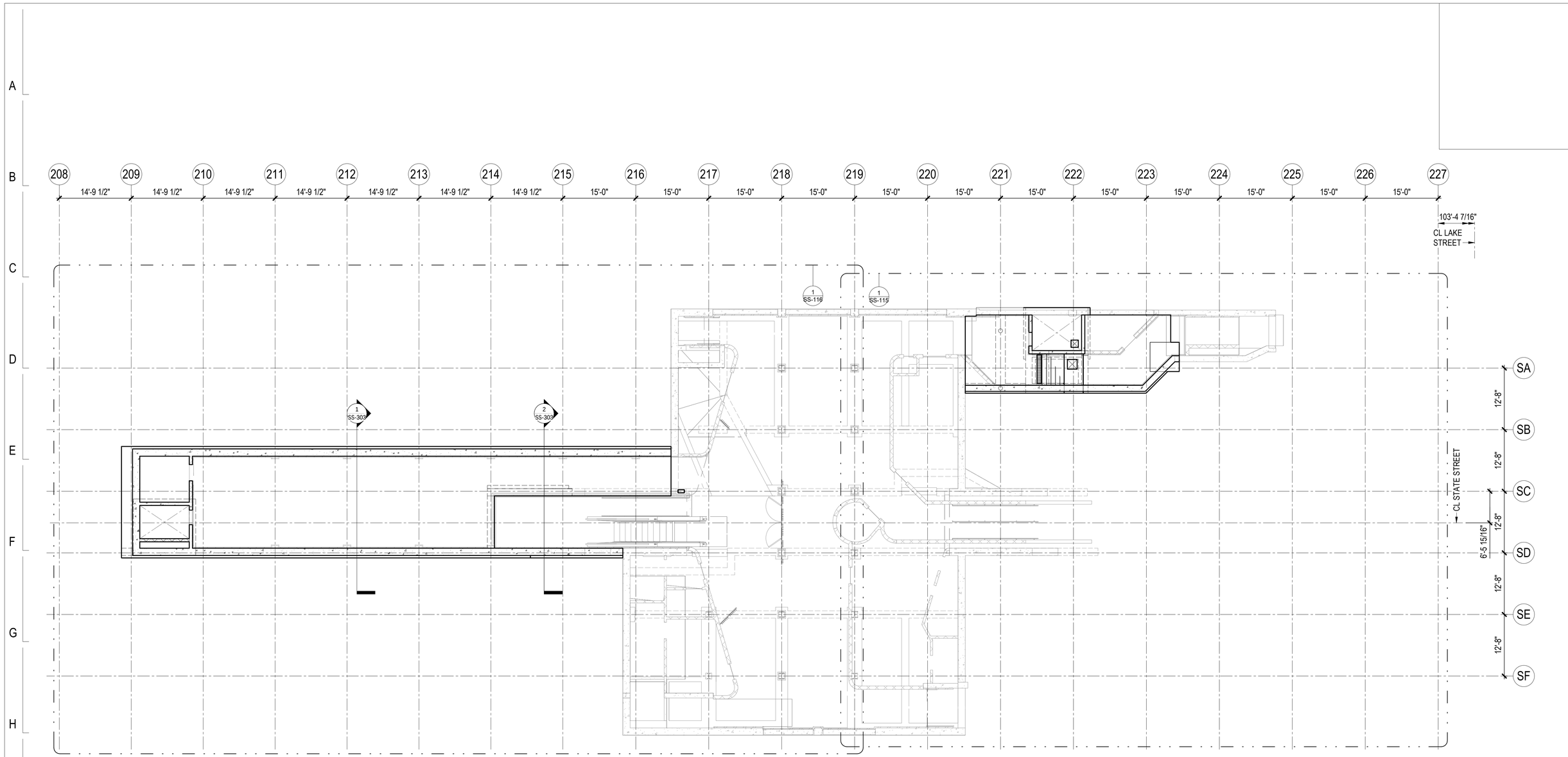

1 SUBWAY MEZZANINE LEVEL PLAN - OVERALL

1" = 10'-0"

DESIGN BY:									
DRAWN BY:		4	7/03/2023	ISSUED FOR BID					
CHECKED BY:		2	1/13/2023	ISSUED FOR PERMIT REVISION 2					
APPROVED BY:		1	11/04/2022	ISSUED FOR PERMIT REVISION 1					
CDOT/APPROVED BY:		0	9/9/2022	ISSUED FOR PERMIT	MMB	MDG	MJT		
		NO.	DATE	REVISIONS	DES.	DRW.	CHK.	DCCO	CDOT

TRANSYSTEMS
222 SOUTH RIVERSIDE PLAZA SUITE 610
CHICAGO, ILLINOIS 60606

SKIDMORE, OWINGS & MERRILL LLP
224 SOUTH MICHIGAN AVENUE, SUITE 1000
CHICAGO, ILLINOIS 60604

ANNA M. DUKES — 062-057866 — LICENSED ILLINOIS — PROFESSIONAL ENGINEER

CHICAGO DEPARTMENT OF TRANSPORTATION
DIVISION OF ENGINEERING

STATE / LAKE LOOP ELEVATED STATION
200 NORTH STATE STREET, CHICAGO, IL 60601

SUBWAY MEZZANINE LEVEL PLAN - OVERALL

CDOT PROJECT D-1-209 | DATE: 9/9/2022

SPEC. NO.

DRAWING NO. SS-104

REVISION NO.4

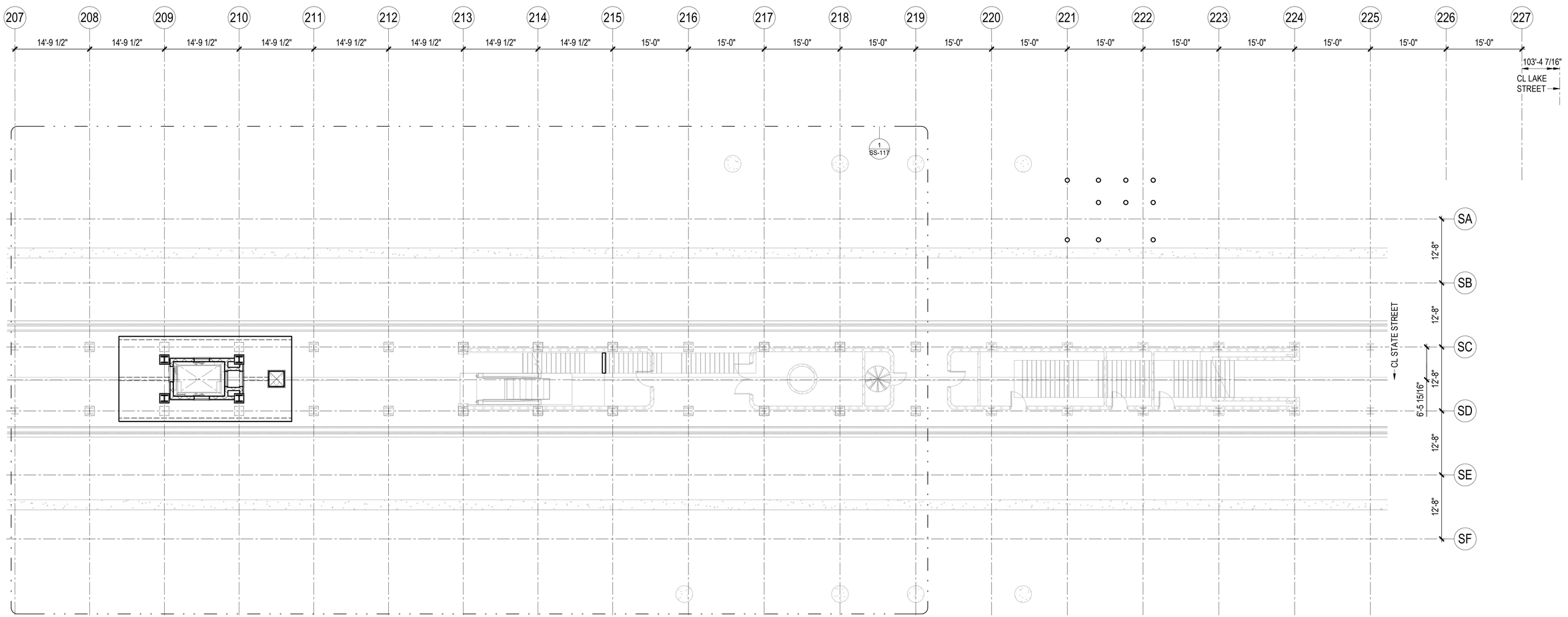

1 SUBWAY PLATFORM LEVEL PLAN - OVERALL

1" = 10'-0"

NO.	DATE	REVISIONS	DES.	DRW.	CHK.	DCCO	CDOT
4	7/03/2023	ISSUED FOR BID					
2	1/13/2023	ISSUED FOR PERMIT REVISION 2					
1	11/04/2022	ISSUED FOR PERMIT REVISION 1					
0	9/9/2022	ISSUED FOR PERMIT	MMB	MDG	MJT		

DESIGN BY:
DRAWN BY:
CHECKED BY:
APPROVED BY:
CDOT/APPROVED BY:

TRANSYSTEMS
222 SOUTH RIVERSIDE PLAZA SUITE 610
CHICAGO, ILLINOIS 60606

SKIDMORE, OWINGS & MERRILL LLP
224 SOUTH MICHIGAN AVENUE, SUITE 1000
CHICAGO, ILLINOIS 60604

CHICAGO DEPARTMENT OF TRANSPORTATION
DIVISION OF ENGINEERING

STATE / LAKE LOOP ELEVATED STATION
200 NORTH STATE STREET, CHICAGO, IL 60601

SPEC. NO.

SUBWAY PLATFORM LEVEL PLAN - OVERALL

DRAWING NO.
SS-105

CDOT PROJECT D-1-209

DATE: 9/9/2022

REVISION NO.4

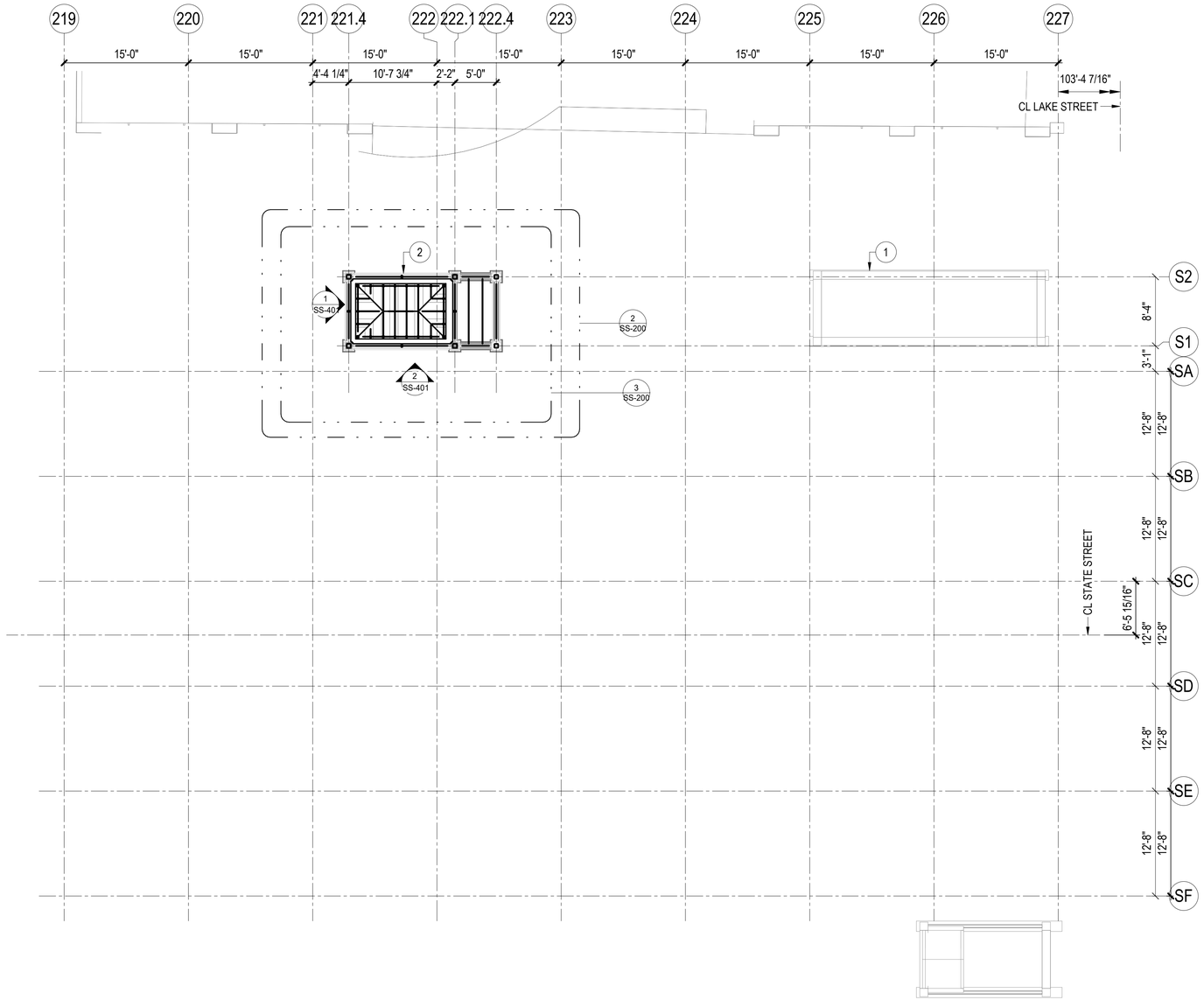

1 SUBWAY STREET LEVEL ROOF PLAN - NORTH

1/8" = 1'-0"

SUBWAY STREET LEVEL ROOF PLAN - NORTH KEY NOTES:

1. EXISTING ESCALATOR ENCLOSURE TO REMAIN.
2. NEW ELEVATOR ENCLOSURE.

SUBWAY STREET LEVEL ROOF PLAN - NORTH PLAN NOTES:

1. ALL STEEL FRAMING SHALL BE PAINTED. RE: ARCHITECTURAL AND SPECIFICATIONS.

TYPICAL PLAN NOTES:

1. REFERENCE CIVIL DRAWINGS FOR ALL UTILITIES, TO KNOW UNDERGROUND CONFLICTS AND RIGHT-OF-WAY LINES.
2. CONTRACTOR TO VERIFY ALL EXISTING STRUCTURES, UTILITIES, ETC PRIOR TO START OF CONSTRUCTION. ANY DISCREPANCIES BETWEEN DESIGN CONDITIONS SHALL IMMEDIATELY BE REPORTED TO THE COMMISSIONER.
3. REFERENCE SS-001 THRU SS-004 FOR STRUCTURAL GENERAL NOTES.
4. REFERENCE SS-010 THRU SS-021 FOR TYPICAL DETAILS.
5. REFERENCE ARCHITECTURAL DRAWINGS FOR WATERPROOFING DETAILS AND DIMENSIONS NOT SHOWN.
6. CONTRACTOR TO PROTECT ALL ITEMS TO REMAIN.
7. CONTRACTOR TO DETERMINE TSRS AND MAINTENANCE OF TRAFFIC. REFERENCE SS-001 THRU SS-003 AND SS-500 THRU SS-502 FOR NOTES AND SCHEMATIC LAYOUT OF TSRS.
8. REFERENCE GEOTECHNICAL REPORT FOR RECOMMENDATIONS AND REQUIREMENTS FOR SOIL AND CLSM BELOW STREET LEVEL.
9. REFERENCE ARCHITECTURAL DRAWINGS FOR ALL DOORS, WALLS AND WINDOW OPENINGS LOCATION AND SIZES.

DESIGN BY:									
DRAWN BY:									
CHECKED BY:		4	7/03/2023	ISSUED FOR BID					
APPROVED BY:		2	1/13/2023	ISSUED FOR PERMIT REVISION 2					
CDOT/APPROVED BY:		1	11/04/2022	ISSUED FOR PERMIT REVISION 1					
		0	9/9/2022	ISSUED FOR PERMIT	MMB	MDG	MJT		
		NO.	DATE	REVISIONS	DES.	DRW.	CHK.	DCCO	CDOT

TRANSYSTEMS
222 SOUTH RIVERSIDE PLAZA SUITE 610
CHICAGO, ILLINOIS 60606

SKIDMORE, OWINGS & MERRILL LLP
224 SOUTH MICHIGAN AVENUE, SUITE 1000
CHICAGO, ILLINOIS 60604

ANNA M. DUKES
062-057286
LICENSED PROFESSIONAL ENGINEER
STATE OF ILLINOIS

CHICAGO DEPARTMENT OF TRANSPORTATION
DIVISION OF ENGINEERING

STATE / LAKE LOOP ELEVATED STATION
200 NORTH STATE STREET, CHICAGO, IL 60601

SPEC. NO.

SUBWAY STREET LEVEL ROOF PLAN - NORTH

DRAWING NO.
SS-111

CDOT PROJECT D-1-209 | DATE: 9/9/2022 | REVISION NO.4

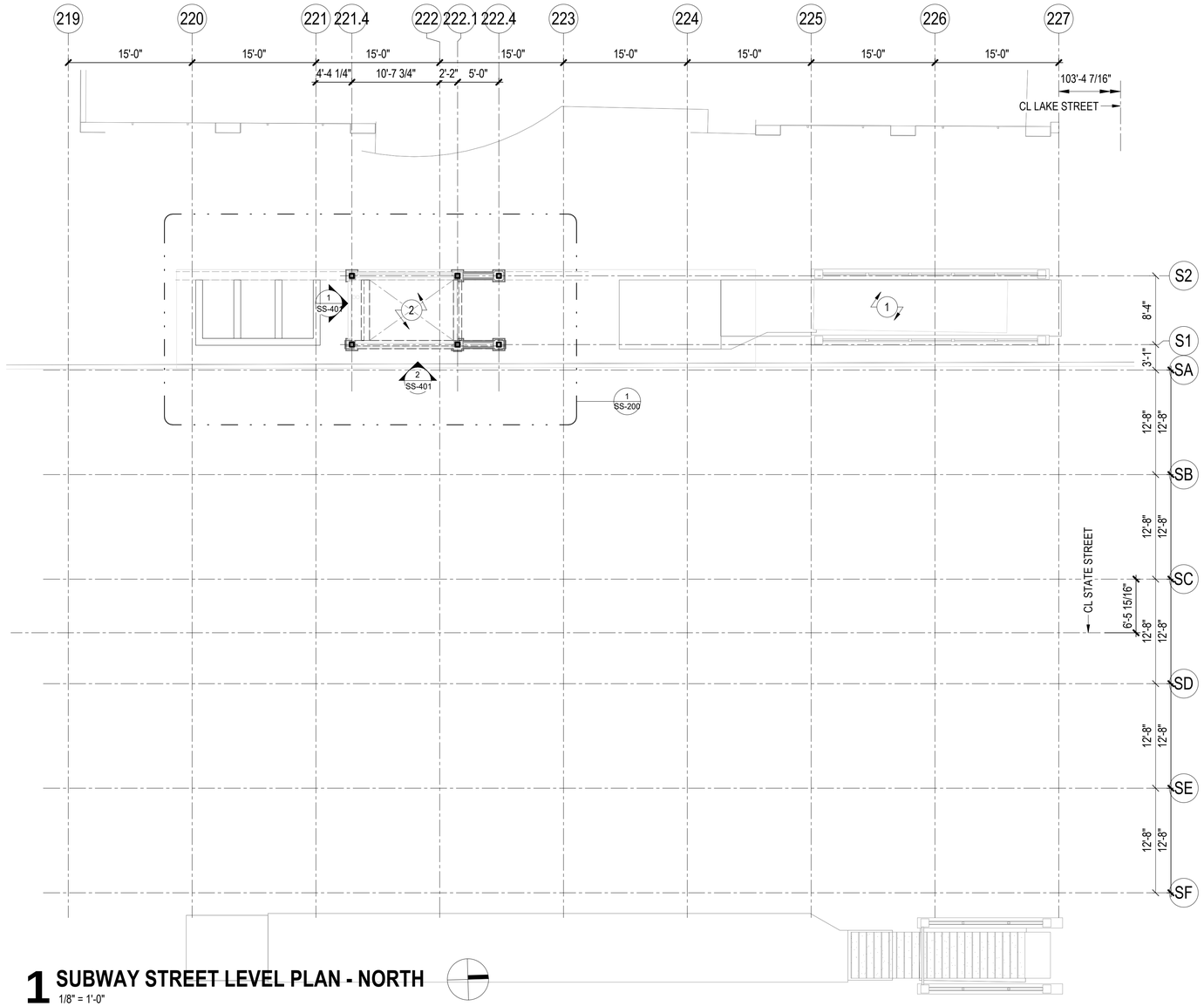

1 SUBWAY STREET LEVEL PLAN - NORTH

1/8" = 1'-0"

SUBWAY STREET LEVEL PLAN - NORTH KEY NOTES:

1. EXISTING ESCALATOR ENCLOSURE TO REMAIN.
2. NEW ELEVATOR ENCLOSURE.

SUBWAY STREET LEVEL PLAN - NORTH PLAN NOTES:

1. RE: CIVIL DRAWINGS FOR ALL UTILITIES, KNOW UNDERGROUND CONFLICTS AND RIGHT-OF-WAY LINES.
2. ALL STEEL FRAMING SHALL BE PAINTED. RE: ARCHITECTURAL AND SPECIFICATIONS.

TYPICAL PLAN NOTES:

1. REFERENCE CIVIL DRAWINGS FOR ALL UTILITIES, TO KNOW UNDERGROUND CONFLICTS AND RIGHT-OF-WAY LINES.
2. CONTRACTOR TO VERIFY ALL EXISTING STRUCTURES, UTILITIES, ETC PRIOR TO START OF CONSTRUCTION. ANY DISCREPANCIES BETWEEN DESIGN CONDITIONS SHALL IMMEDIATELY BE REPORTED TO THE COMMISSIONER.
3. REFERENCE SS-001 THRU SS-004 FOR STRUCTURAL GENERAL NOTES.
4. REFERENCE SS-010 THRU SS-021 FOR TYPICAL DETAILS.
5. REFERENCE ARCHITECTURAL DRAWINGS FOR WATERPROOFING DETAILS AND DIMENSIONS NOT SHOWN.
6. CONTRACTOR TO PROTECT ALL ITEMS TO REMAIN.
7. CONTRACTOR TO DETERMINE TSRS AND MAINTENANCE OF TRAFFIC. REFERENCE SS-001 THRU SS-003 AND SS-500 THRU SS-502 FOR NOTES AND SCHEMATIC LAYOUT OF TSRS.
8. REFERENCE GEOTECHNICAL REPORT FOR RECOMMENDATIONS AND REQUIREMENTS FOR SOIL AND CLSM BELOW STREET LEVEL.
9. REFERENCE ARCHITECTURAL DRAWINGS FOR ALL DOORS, WALLS AND WINDOW OPENINGS LOCATION AND SIZES.

DESIGN BY:										
DRAWN BY:										
CHECKED BY:		4	7/03/2023	ISSUED FOR BID						
APPROVED BY:		2	1/13/2023	ISSUED FOR PERMIT REVISION 2						
CDOT/APPROVED BY:		1	11/04/2022	ISSUED FOR PERMIT REVISION 1						
		0	9/9/2022	ISSUED FOR PERMIT	MMB	MDG	MJT			
		NO.	DATE	REVISIONS	DES.	DRW.	CHK.	DCCO	CDOT	

TRANSYSTEMS
222 SOUTH RIVERSIDE PLAZA SUITE 610
CHICAGO, ILLINOIS 60606

SKIDMORE, OWINGS & MERRILL LLP
224 SOUTH MICHIGAN AVENUE, SUITE 1000
CHICAGO, ILLINOIS 60604

CHICAGO DEPARTMENT OF TRANSPORTATION
DIVISION OF ENGINEERING

STATE / LAKE LOOP ELEVATED STATION
200 NORTH STATE STREET, CHICAGO, IL 60601

SUBWAY STREET LEVEL PLAN - NORTH

CDOT PROJECT D-1-209 | DATE: 9/9/2022

SPEC. NO.

DRAWING NO. SS-112

REVISION NO.4

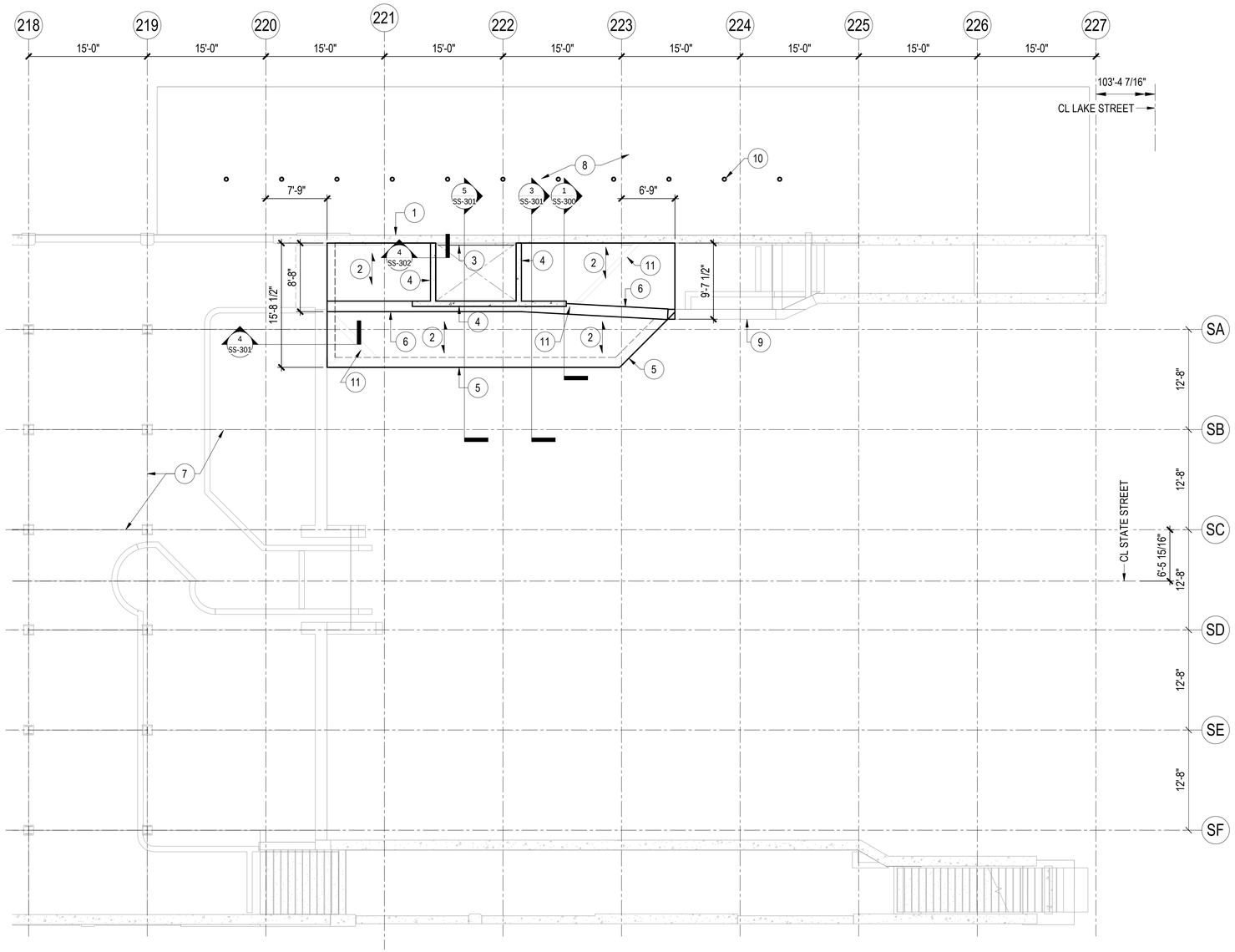

1 SUBWAY MEZZANINE LEVEL ROOF PLAN - NORTH

1/8" = 1'-0"

SUBWAY MEZZANINE LEVEL ROOF PLAN - NORTH KEY NOTES:

1. EXISTING CONCRETE VAULT WALL TO REMAIN ABOVE ELEV. -1'-4 1/8". EXTEND OF WALL ON SHEET SS-202 AND UNDERPIN PER DETAILS ON SHEET SS-301.
2. NEW 14" CONCRETE SLAB, REINF. W/ #5 @ 12" O.C. TOP & #8 @ 6" O.C. BOTT. (EAST/WEST), AND #5 @ 12" O.C. TOP & BOTT. (NORTH/SOUTH).
3. NEW HSS TUBE STEEL BEAM 18"x6"x3/8" LDV.
4. NEW 8" CONCRETE ELEVATOR WALL.
5. NEW 1'-3" THICK CONCRETE WALL BELOW.
6. 30" DEEP x 16" WIDE UPTURNED CONCRETE BEAM REINF. W/ (4) #9 TOP & BOTT.; #4 CLOSED STIRRUPS @ 6" O.C.
7. EXISTING STEEL BEAM TO REMAIN.
8. EXISTING UNDERGROUND VAULT. CONTRACTOR SHALL TAKE PRECAUTIONS TO MAINTAIN THE STABILITY OF THE VAULT WALL ALL THROUGH CONSTRUCTION.
9. EXISTING CONCRETE WALL.
10. EXISTING VAULT COLUMNS.
11. NEW CMU WALL BELOW.

TYPICAL PLAN NOTES:

1. REFERENCE CIVIL DRAWINGS FOR ALL UTILITIES, TO KNOW UNDERGROUND CONFLICTS AND RIGHT-OF-WAY LINES.
2. CONTRACTOR TO VERIFY ALL EXISTING STRUCTURES, UTILITIES, ETC PRIOR TO START OF CONSTRUCTION. ANY DISCREPANCIES BETWEEN DESIGN CONDITIONS SHALL IMMEDIATELY BE REPORTED TO THE COMMISSIONER.
3. REFERENCE SS-001 THRU SS-004 FOR STRUCTURAL GENERAL NOTES.
4. REFERENCE SS-010 THRU SS-021 FOR TYPICAL DETAILS.
5. REFERENCE ARCHITECTURAL DRAWINGS FOR WATERPROOFING DETAILS AND DIMENSIONS NOT SHOWN.
6. CONTRACTOR TO PROTECT ALL ITEMS TO REMAIN.
7. CONTRACTOR TO DETERMINE TSRS AND MAINTENANCE OF TRAFFIC. REFERENCE SS-001 THRU SS-003 AND SS-500 THRU SS-502 FOR NOTES AND SCHEMATIC LAYOUT OF TSRS.
8. REFERENCE GEOTECHNICAL REPORT FOR RECOMMENDATIONS AND REQUIREMENTS FOR SOIL AND CLSM BELOW STREET LEVEL.
9. REFERENCE ARCHITECTURAL DRAWINGS FOR ALL DOORS, WALLS AND WINDOW OPENINGS LOCATION AND SIZES.

DESIGN BY:									
DRAWN BY:									
CHECKED BY:		4	7/03/2023	ISSUED FOR BID					
APPROVED BY:		2	1/13/2023	ISSUED FOR PERMIT REVISION 2					
CDOT/APPROVED BY:		1	11/04/2022	ISSUED FOR PERMIT REVISION 1					
		0	9/9/2022	ISSUED FOR PERMIT	MMB	MDG	MJT		
		NO.	DATE	REVISIONS	DES.	DRW.	CHK.	DCCO	CDOT

TRANSYSTEMS
222 SOUTH RIVERSIDE PLAZA SUITE 610
CHICAGO, ILLINOIS 60606

SKIDMORE, OWINGS & MERRILL LLP
224 SOUTH MICHIGAN AVENUE, SUITE 1000
CHICAGO, ILLINOIS 60604

CHICAGO DEPARTMENT OF TRANSPORTATION
DIVISION OF ENGINEERING

STATE / LAKE LOOP ELEVATED STATION
200 NORTH STATE STREET, CHICAGO, IL 60601

SUBWAY MEZZANINE LEVEL ROOF PLAN - NORTH

CDOT PROJECT D-1-209 | DATE: 9/9/2022

SPEC. NO.

DRAWING NO. SS-113

REVISION NO.4

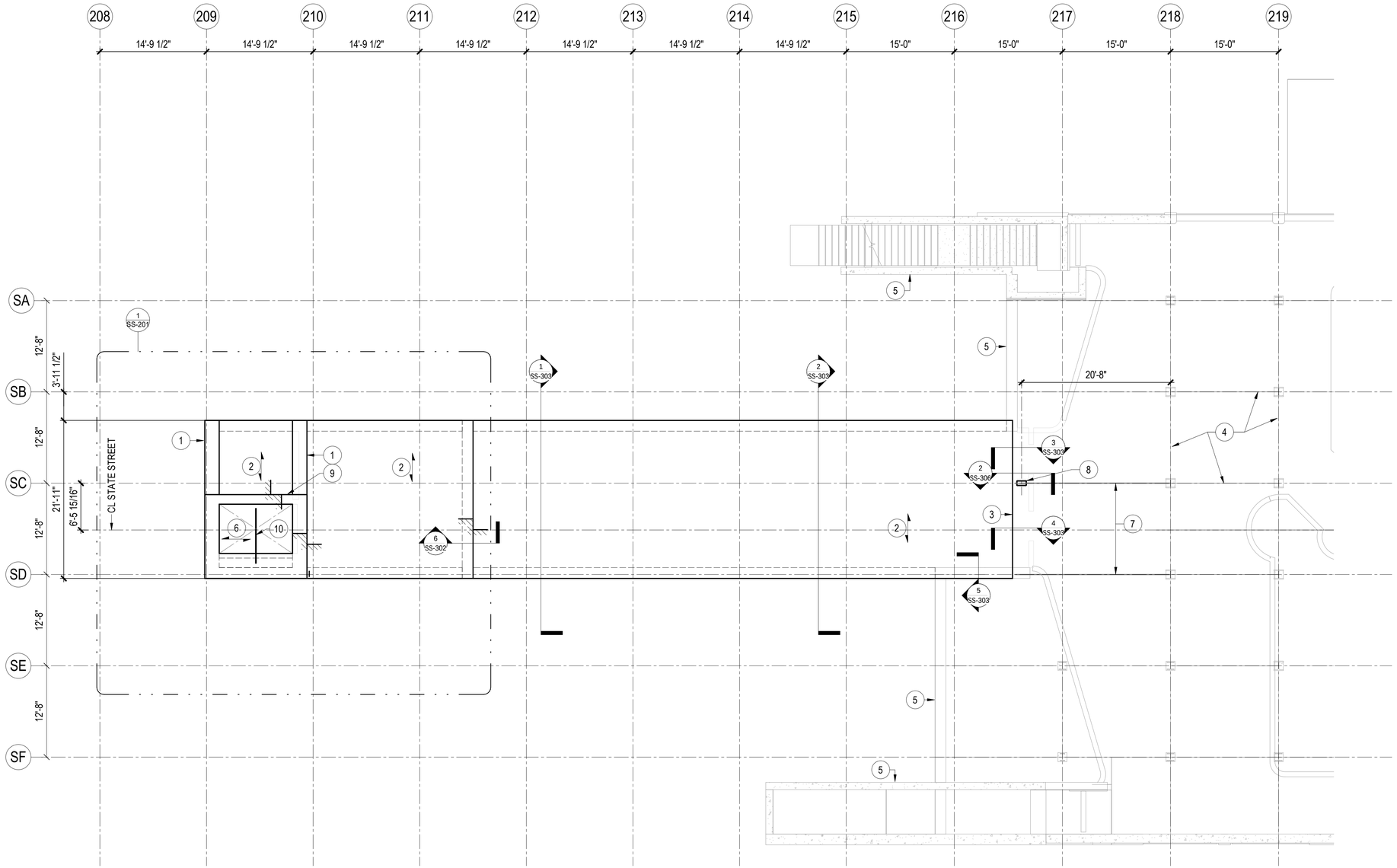

1 SUBWAY MEZZANINE LEVEL ROOF PLAN -SOUTH

1/8" = 1'-0"

SUBWAY MEZZANINE LEVEL ROOF PLAN - SOUTH KEY NOTES:

1. 24"x40" DEEP CONCRETE BEAM REINF. W/ (6) #10 BOTTOM, (6) #8 TOP, (3) #6 EACH FACE AND #4 CLOSED STIRRUPS @ 6" O.C.
2. NEW 18" THICK CONCRETE SLAB. REINF. W/ #8 @ 6" O.C. BOTT. & #8 @ 12" O.C. TOP EAST/WEST; #5 @ 12" O.C. TOP & BOTT. NORTH/ SOUTH.
3. DOWEL INTO EXISTING SLAB, BOTTOM OF CONC. TO MATCH EXISTING.
4. EXISTING STEEL BEAM TO REMAIN.
5. EXISTING CONCRETE WALL TO REMAIN.
6. NEW 14" THICK CONCRETE ROOF SLAB REINF. W/ #6 @ 12" O.C. TOP & BOTT. EAST/WEST; #4 @ 12" O.C. NORTH/SOUTH.
7. EXISTING 27WF178 (V.I.F.) TO REMAIN. SHORE AND REPLACE COLUMN AT SOUTH END.
8. NEW HSS16x8x1/2 COLUMN FROM MEZZANINE FLOOR TO MEZZANINE ROOF.
9. 16"x40" CONCRETE BEAM REINF. W/ (4) #8 TOP & BOTTOM, (3) #5 EACH FACE AND #4 CLOSED STIRRUPS @ 8" O.C. HOOK REINF. INTO SUPPORTING BEAM.
10. FINAL HOIST BEAM SIZE TO BE DETERMINED BY ELEVATOR SUPPLIER. ATTACH HOIST BEAM TO CONCRETE WALLS WITH EMBED PLATE 1/2" THICK W/ (4) 1/2"Ø HEADED STUDS x 6" LONG EMBED W/ 4" GAUGE AND PITCH WELDED ALL AROUND WITH 5/16" WELD FROM HOIST BEAM TO PLATE. THE SIZE OF PLATE SHALL BE 8"x8".

TYPICAL PLAN NOTES:

1. REFERENCE CIVIL DRAWINGS FOR ALL UTILITIES, TO KNOW UNDERGROUND CONFLICTS AND RIGHT-OF-WAY LINES.
2. CONTRACTOR TO VERIFY ALL EXISTING STRUCTURES, UTILITIES, ETC PRIOR TO START OF CONSTRUCTION. ANY DISCREPANCIES BETWEEN DESIGN CONDITIONS SHALL IMMEDIATELY BE REPORTED TO THE COMMISSIONER.
3. REFERENCE SS-001 THRU SS-004 FOR STRUCTURAL GENERAL NOTES.
4. REFERENCE SS-010 THRU SS-021 FOR TYPICAL DETAILS.
5. REFERENCE ARCHITECTURAL DRAWINGS FOR WATERPROOFING DETAILS AND DIMENSIONS NOT SHOWN.
6. CONTRACTOR TO PROTECT ALL ITEMS TO REMAIN.
7. CONTRACTOR TO DETERMINE TSRS AND MAINTENANCE OF TRAFFIC. REFERENCE SS-001 THRU SS-003 AND SS-500 THRU SS-502 FOR NOTES AND SCHEMATIC LAYOUT OF TSRS.
8. REFERENCE GEOTECHNICAL REPORT FOR RECOMMENDATIONS AND REQUIREMENTS FOR SOIL AND CLSM BELOW STREET LEVEL.
9. REFERENCE ARCHITECTURAL DRAWINGS FOR ALL DOORS, WALLS AND WINDOW OPENINGS LOCATION AND SIZES.

DESIGN BY:									
DRAWN BY:									
CHECKED BY:		4	7/03/2023	ISSUED FOR BID					
APPROVED BY:		1	11/04/2022	ISSUED FOR PERMIT REVISION 1					
CDOT/APPROVED BY:		0	9/9/2022	ISSUED FOR PERMIT	MMB	MDG	MJT		
		NO.	DATE	REVISIONS	DES.	DRW.	CHK.	DCCO	CDOT

TRANSYSTEMS
222 SOUTH RIVERSIDE PLAZA SUITE 610
CHICAGO, ILLINOIS 60606

SKIDMORE, OWINGS & MERRILL LLP
224 SOUTH MICHIGAN AVENUE, SUITE 1000
CHICAGO, ILLINOIS 60604

ANNA M. DUKES
062-057866
LICENSED PROFESSIONAL ENGINEER
STATE OF ILLINOIS

CHICAGO DEPARTMENT OF TRANSPORTATION
DIVISION OF ENGINEERING

STATE / LAKE LOOP ELEVATED STATION
200 NORTH STATE STREET, CHICAGO, IL 60601

SPEC. NO.

SUBWAY MEZZANINE LEVEL ROOF PLAN - SOUTH

DRAWING NO.
SS-114

CDOT PROJECT D-1-209

DATE: 9/9/2022

REVISION NO.4

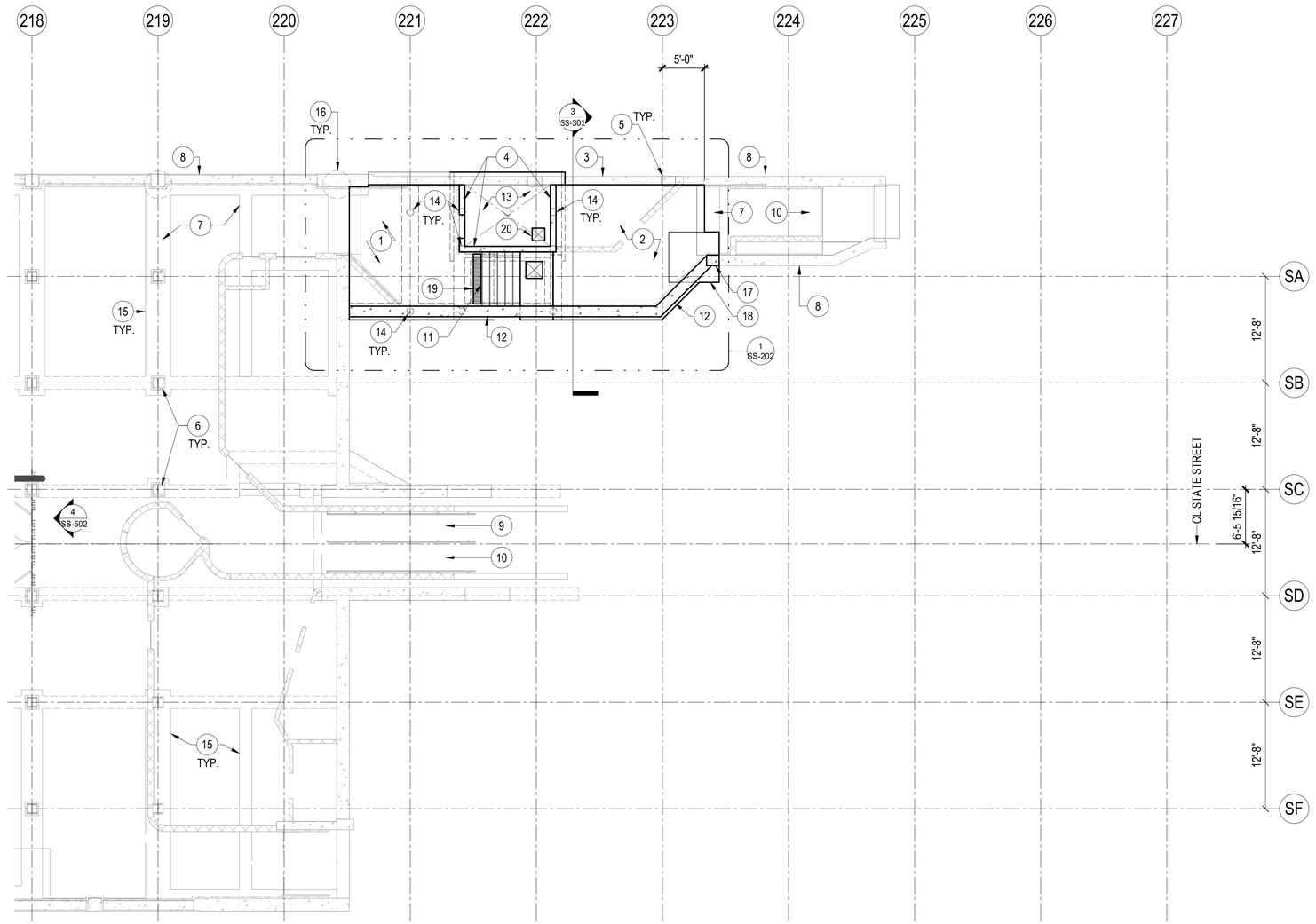

1 SUBWAY MEZZANINE LEVEL PLAN -NORTH

1/8" = 1'-0"

SUBWAY MEZZANINE LEVEL PLAN - NORTH KEY NOTES:

1. NEW 1'-0" THICK CONCRETE STRUCTURAL SLAB, REINF. W/ #5 @ 12" O.C. TOP & BOTT. (NORTH/SOUTH) AND #5 @ 12" O.C. TOP & BOTT. (EAST/WEST), OVER 2" SAND SLURRY PROTECTION SLAB, OVER WATERPROOFING, OVER 2" MUD SLAB, OVER 6" MINIMUM CLSM. T.O. CONCRETE = -4'-1 1/2". RE: ARCH'L. DETAILS FOR WATER PROTECTION.
2. NEW 1'-3" THICK CONCRETE SLAB, REINF. W/ #5 @ 12" O.C. TOP & BOTT. EACH WAY, 2" SAND SLURRY PROTECTION SLAB, OVER WATERPROOFING, OVER 2" MUD SLAB, OVER 24" SELF COMPACTING STONE CA-1, OVER GEOTEXTILE FABRIC OR CLSM. T.O. CONCRETE = -1'-4 1/8". RE: ARCH'L. DETAILS FOR WATER PROTECTION. RE: GEOTECNICAL REPORT FOR UNDER SLAB REQUIREMENTS.
3. EXISTING WALL TO REMAIN ABOVE ELEV. -1'-4 1/8". EXTEND WALL AND UNDERPIN PER DETAILS.
4. NEW 8" THICK CONCRETE ELEVATOR WALL.
5. EXISTING 20" WIDE x 18" DEEP CONCRETE PILASTER, TYP. @ GRIDS.
6. EXISTING STEEL COLUMNS TO REMAIN.
7. EXISTING MAT SLAB TO REMAIN.
8. EXISTING CONCRETE WALL TO REMAIN.
9. EXISTING STAIRS TO REMAIN.
10. EXISTING ESCALATOR TO REMAIN.
11. NEW CONCRETE STAIRS.
12. NEW 1'-3" CONCRETE WALL.
13. 2'-6" THICK ELEVATOR MAT SLAB, REINF. W/ #6 @ 12" O.C. TOP & BOTT. EACH WAY.
14. NEW CONCRETE 9 5/8" DIA. MICROPILES. RE: S-012 FOR BATTER.
15. EXISTING FOUNDATION/GRADE BEAM
16. EXISTING DRILLED SHAFT.
17. 18"x15" CONCRETE COLUMN, REINF. W/ (6) #6 VERT. AND #4 TIES @ 12" O.C.
18. 6'-0"x6'-0"x1'-9" FOOTING REINF. W/ #6 @ 12" O.C. EACH WAY TOP & BOTT.
19. RE: ARCH'L. AND PLUMBING FOR TRENCH DRAIN INFO.
20. 1'-6"x1'-6"x2'-0" SUMP PIT. PROVIDE L3x3x1/4 @ PERIMETER OF OPENING (EMBEDDED INTO MAT SLAB) AND STEEL GRATE OVER SUMP PIT. PROVIDE (3) #6 @ 6" O.C. TOP & BOTT. IN MAT SLAB AROUND PIT. 8" WALLS @ PIT (BELOW MAT) REINF. W/ #6 @ 12" O.C. EACH FACE EACH WALL.

TYPICAL PLAN NOTES:

1. REFERENCE CIVIL DRAWINGS FOR ALL UTILITIES, TO KNOW UNDERGROUND CONFLICTS AND RIGHT-OF-WAY LINES.
2. CONTRACTOR TO VERIFY ALL EXISTING STRUCTURES, UTILITIES, ETC PRIOR TO START OF CONSTRUCTION. ANY DISCREPANCIES BETWEEN DESIGN CONDITIONS SHALL IMMEDIATELY BE REPORTED TO THE COMMISSIONER.
3. REFERENCE SS-001 THRU SS-004 FOR STRUCTURAL GENERAL NOTES.
4. REFERENCE SS-010 THRU SS-021 FOR TYPICAL DETAILS.
5. REFERENCE ARCHITECTURAL DRAWINGS FOR WATERPROOFING DETAILS AND DIMENSIONS NOT SHOWN.
6. CONTRACTOR TO PROTECT ALL ITEMS TO REMAIN.
7. CONTRACTOR TO DETERMINE TSRS AND MAINTENANCE OF TRAFFIC. REFERENCE SS-001 THRU SS-003 AND SS-500 THRU SS-502 FOR NOTES AND SCHEMATIC LAYOUT OF TSRS.
8. REFERENCE GEOTECHNICAL REPORT FOR RECOMMENDATIONS AND REQUIREMENTS FOR SOIL AND CLSM BELOW STREET LEVEL.
9. REFERENCE ARCHITECTURAL DRAWINGS FOR ALL DOORS, WALLS AND WINDOW OPENINGS LOCATION AND SIZES.

DESIGN BY:									
DRAWN BY:									
CHECKED BY:		4	7/03/2023	ISSUED FOR BID					
		1	11/04/2022	ISSUED FOR PERMIT REVISION 1					
APPROVED BY:		0	9/9/2022	ISSUED FOR PERMIT	MMB	MDG	MJT		
CDOT/APPROVED BY:		NO.	DATE	REVISIONS	DES.	DRW.	CHK.	DCCO	CDOT

TRANSYSTEMS
222 SOUTH RIVERSIDE PLAZA SUITE 610
CHICAGO, ILLINOIS 60606

SKIDMORE, OWINGS & MERRILL LLP
224 SOUTH MICHIGAN AVENUE, SUITE 1000
CHICAGO, ILLINOIS 60604

STATE OF ILLINOIS — ANNA M. IUKO — 062-057260 — REGISTERED PROFESSIONAL ENGINEER

CHICAGO DEPARTMENT OF TRANSPORTATION
DIVISION OF ENGINEERING

STATE / LAKE LOOP ELEVATED STATION
200 NORTH STATE STREET, CHICAGO, IL 60601

SUBWAY MEZZANINE LEVEL PLAN - NORTH

CDOT PROJECT D-1-209 | DATE: 9/9/2022

SPEC. NO.

DRAWING NO. SS-115

REVISION NO. 4

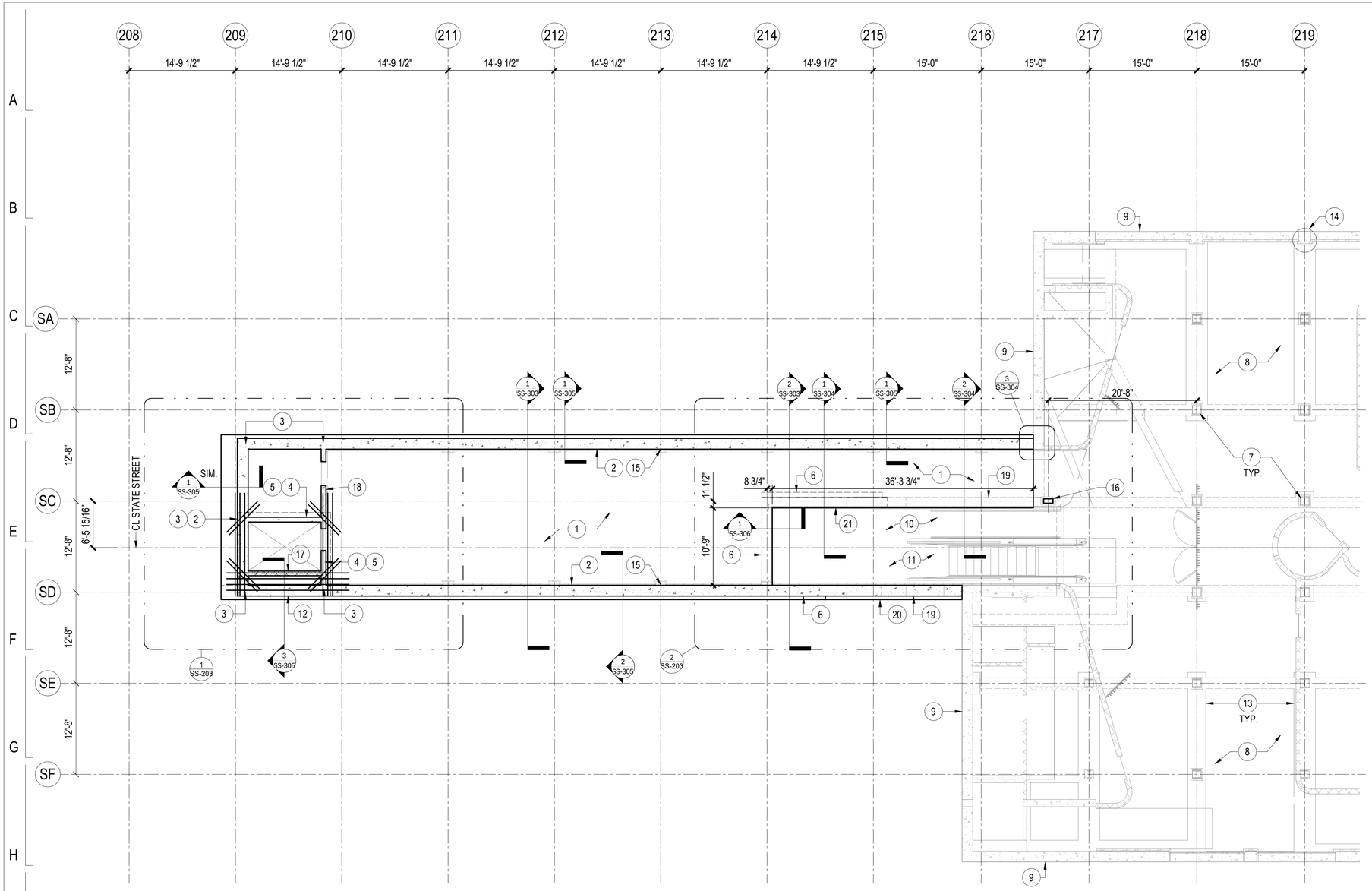

1 SUBWAY MEZZANINE LEVEL PLAN -SOUTH

1/8" = 1'-0"

SUBWAY MEZZANINE LEVEL PLAN - SOUTH KEY NOTES:

1. NEW 24" THICK CONCRETE MAT SLAB, OVER 2" SAND SLURRY PROTECTION SLAB, OVER WATERPROOFING, OVER 2" CONCRETE MUDSLAB, OVER CLSM. REINFORCE MAT SLAB W/ #8 @ 6" O.C. TOP & BOTTOM TRANSVERSE (EAST/WEST), #5 @ 12" O.C. TOP & BOTTOM LONGITUDINAL (NORTH/SOUTH).
2. NEW 1'-6" THICK CONCRETE WALL, REINF. W/ #8 @ 8" O.C. VERT. EACH FACE, #5 @ 12" O.C. HORIZ. EACH FACE.
3. 18"x30" EFFECTIVE COLUMN CENTERED UNDER ROOF BEAM ABOVE, REINF. W/ (5) #8 @ 6" O.C. VERT. EACH FACE. MAINTAIN TYP. HORIZ. WALL REINF. PROVIDE #4 STIRRUPS @ 12" O.C.
4. 8" CONCRETE WALL FROM MEZZANINE SLAB TO MEZZANINE ROOF. REINF. W/ (2) LAYERS OF #5 @ 12" O.C. VERT. AND #4 @ 12" O.C. HORIZ.
5. 16" CONCRETE WALL FROM MEZZANINE SLAB DOWN TO EXISTING CONCRETE SUBWAY LID.
6. NEW CLOSURE WALLS AT ESCALATOR/STAIR ATTACH TO EXISTING PARTIAL HEIGHT WALL.
7. EXISTING STEEL COLUMNS TO REMAIN.
8. EXISTING MAT SLAB TO REMAIN.
9. EXISTING CONCRETE WALL TO REMAIN.
10. EXISTING STAIRS TO REMAIN.
11. EXISTING ESCALATOR TO REMAIN.
12. THICKEN WALL FROM 18" TO 41.5" AT ELEVATOR BELOW MEZZANINE SLAB.
13. EXISTING FOUNDATION/GRADE BEAM
14. EXISTING DRILLED SHAFT.
15. RE: 2/AS-511 FOR PILASTER DIMENSIONS, PROVIDE (2) #5 VERTICAL AND #3 CLOSED STIRRUPS @ 12" O.C. IN PILASTER, TYP.
16. NEW HSS16x8x1/2 COLUMN FROM MEZZANINE FLOOR TO MEZZANINE ROOF.
17. 8" CMU WALL FULLY GROUTED, REINF. W/ #5 @ 16" O.C. PROVIDE (3) CELLS WITH #5 REINF. AT GUIDERAIL, COORDINATE WITH ELEV. SUPPLIER.
18. 8" CMU WALL FULLY GROUTED, REINF. W/ #5 @ 16" O.C. RE: SS-020 FOR REINF. AT OPENINGS.
19. EXIST. 1'-6" WALL BELOW MAT SLAB.
20. HORIZ. BEAM @ MEZZANINE LEVEL. (3) #8 TOP AND BOTTOM W/ (5) #8 EACH FACE W/ #4 CLOSED STIRRUPS @ 6" O.C.
21. PROVIDE STAINLESS STEEL EMBED PLATE WITH STAINLESS STEEL EXPANSION ANCHORS (MIN. (2) 1/2"Ø ANCHORS x 6" EMBED) FOR HAND RAIL ATTACHMENT ALONG THE WALL AT EQUAL SPACING.

TYPICAL PLAN NOTES:

1. REFERENCE CIVIL DRAWINGS FOR ALL UTILITIES, TO KNOW UNDERGROUND CONFLICTS AND RIGHT-OF-WAY LINES.
2. CONTRACTOR TO VERIFY ALL EXISTING STRUCTURES, UTILITIES, ETC PRIOR TO START OF CONSTRUCTION. ANY DISCREPANCIES BETWEEN DESIGN CONDITIONS SHALL IMMEDIATELY BE REPORTED TO THE COMMISSIONER.
3. REFERENCE SS-001 THRU SS-004 FOR STRUCTURAL GENERAL NOTES.
4. REFERENCE SS-010 THRU SS-021 FOR TYPICAL DETAILS.
5. REFERENCE ARCHITECTURAL DRAWINGS FOR WATERPROOFING DETAILS AND DIMENSIONS NOT SHOWN.
6. CONTRACTOR TO PROTECT ALL ITEMS TO REMAIN.
7. CONTRACTOR TO DETERMINE TSRS AND MAINTENANCE OF TRAFFIC. REFERENCE SS-001 THRU SS-003 AND SS-500 THRU SS-502 FOR NOTES AND SCHEMATIC LAYOUT OF TSRS.
8. REFERENCE GEOTECHNICAL REPORT FOR RECOMMENDATIONS AND REQUIREMENTS FOR SOIL AND CLSM BELOW STREET LEVEL.
9. REFERENCE ARCHITECTURAL DRAWINGS FOR ALL DOORS, WALLS AND WINDOW OPENINGS LOCATION AND SIZES.

DESIGN BY:									
DRAWN BY:									
CHECKED BY:		4	7/03/2023	ISSUED FOR BID					
APPROVED BY:		1	11/04/2022	ISSUED FOR PERMIT REVISION 1					
CDOT/APPROVED BY:		0	9/9/2022	ISSUED FOR PERMIT	MMB	MDG	MJT		
		NO.	DATE	REVISIONS	DES.	DRW.	CHK.	DCCO	CDOT

TRANSYSTEMS
222 SOUTH RIVERSIDE PLAZA SUITE 610
CHICAGO, ILLINOIS 60606

SKIDMORE, OWINGS & MERRILL LLP
224 SOUTH MICHIGAN AVENUE, SUITE 1000
CHICAGO, ILLINOIS 60604

CHICAGO DEPARTMENT OF TRANSPORTATION
DIVISION OF ENGINEERING

STATE / LAKE LOOP ELEVATED STATION
200 NORTH STATE STREET, CHICAGO, IL 60601

SUBWAY MEZZANINE LEVEL PLAN - SOUTH

CDOT PROJECT D-1-209 | DATE: 9/9/2022

SPEC. NO.

DRAWING NO. SS-116

REVISION NO.4

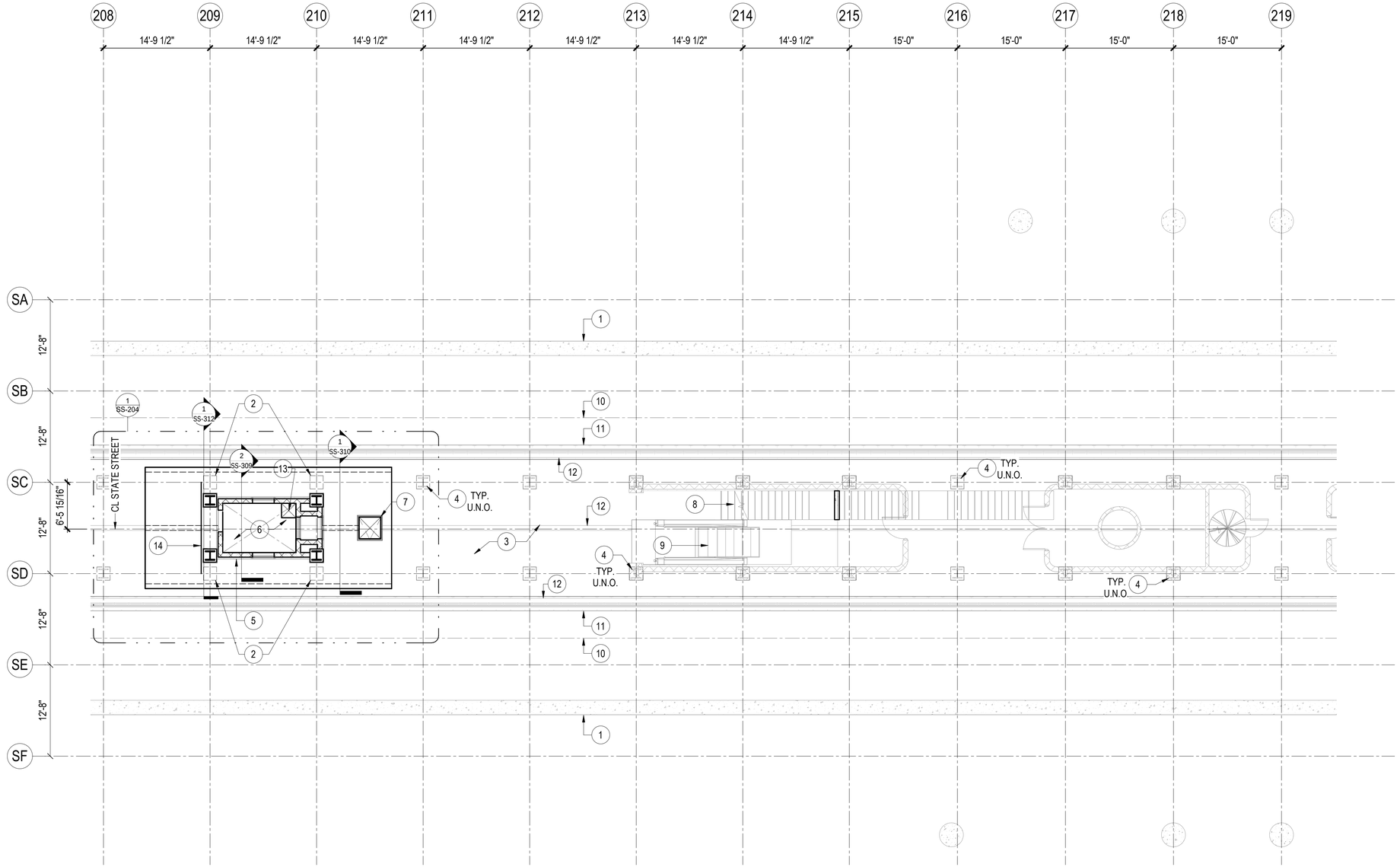

1 SUBWAY PLATFORM LEVEL PLAN - SOUTH

1/8" = 1'-0"

SUBWAY PLATFORM LEVEL PLAN - SOUTH KEY NOTES:

1. EXISTING SUBWAY TUNNEL WALL TO REMAIN.
2. EXISTING STEEL COLUMNS TO BE REMOVED.
3. EXISTING ELEVATED PLATFORM SLAB TO REMAIN.
4. EXISTING STEEL COLUMNS TO REMAIN.
5. 8" CMU WALLS AT PERIMETER OF ELEVATED PLATFORM TO SUBWAY MAT. FULLY GROUT ALL CELLS, REINF. W/ #5 @ 8" O.C.
6. CUT EXISTING ELEVATED PLATFORM SLAB FOR ELEVATOR PENETRATION.
7. NEW ACCESS HATCH. PROVIDE L3x3x1/4 ALL AROUND THE OPENING W/ 1/2"Ø x 4" LONG H.S. @ 12" O.C. AND 3" FROM CORNERS, RE: AS-601 FOR ADDITIONAL INFO.
8. EXISTING STAIRS TO REMAIN.
9. EXISTING ESCALATOR TO REMAIN.
10. CENTERLINE OF EXISTING SUBWAY TRACKS.
11. EXISTING TACTILE STRIP TO REMAIN AT EDGE OF PLATFORM.
12. EXISTING CONCRETE WALL BELOW PLATFORM SLAB.
13. SUMP PUMP CUT INTO EXISTING SUBWAY FOUNDATION MAT. LOCATION AND SIZE TO BE COORDINATED W/ ARCH'L. AND PLUMBING. PROVIDE ANGLE FRAME @ PERIMETER OF OPENING AND STEEL GRATE OVER SUMP PIT.
14. LIGHT TRAY SUPPORT TUBE HSS 3x8x3/16 L.D.V.

TYPICAL PLAN NOTES:

1. REFERENCE CIVIL DRAWINGS FOR ALL UTILITIES, TO KNOW UNDERGROUND CONFLICTS AND RIGHT-OF-WAY LINES.
2. CONTRACTOR TO VERIFY ALL EXISTING STRUCTURES, UTILITIES, ETC PRIOR TO START OF CONSTRUCTION. ANY DISCREPANCIES BETWEEN DESIGN CONDITIONS SHALL IMMEDIATELY BE REPORTED TO THE COMMISSIONER.
3. REFERENCE SS-001 THRU SS-004 FOR STRUCTURAL GENERAL NOTES.
4. REFERENCE SS-010 THRU SS-021 FOR TYPICAL DETAILS.
5. REFERENCE ARCHITECTURAL DRAWINGS FOR WATERPROOFING DETAILS AND DIMENSIONS NOT SHOWN.
6. CONTRACTOR TO PROTECT ALL ITEMS TO REMAIN.
7. CONTRACTOR TO DETERMINE TSRS AND MAINTENANCE OF TRAFFIC. REFERENCE SS-001 THRU SS-003 AND SS-500 THRU SS-502 FOR NOTES AND SCHEMATIC LAYOUT OF TSRS.
8. REFERENCE GEOTECHNICAL REPORT FOR RECOMMENDATIONS AND REQUIREMENTS FOR SOIL AND CLSM BELOW STREET LEVEL.
9. REFERENCE ARCHITECTURAL DRAWINGS FOR ALL DOORS, WALLS AND WINDOW OPENINGS LOCATION AND SIZES.

DESIGN BY:									
DRAWN BY:									
CHECKED BY:		4	7/03/2023	ISSUED FOR BID					
APPROVED BY:		1	11/04/2022	ISSUED FOR PERMIT REVISION 1					
CDOT/APPROVED BY:		0	9/9/2022	ISSUED FOR PERMIT	MMB	MDG	MJT		
		NO.	DATE	REVISIONS	DES.	DRW.	CHK.	DCCO	CDOT

TRANSYSTEMS
222 SOUTH RIVERSIDE PLAZA SUITE 610
CHICAGO, ILLINOIS 60606

SKIDMORE, OWINGS & MERRILL LLP
224 SOUTH MICHIGAN AVENUE, SUITE 1000
CHICAGO, ILLINOIS 60604

STATE OF ILLINOIS — ANNA M. DUKE — 062-057866 — LICENSED PROFESSIONAL ENGINEER

CHICAGO DEPARTMENT OF TRANSPORTATION
DIVISION OF ENGINEERING

STATE / LAKE LOOP ELEVATED STATION
200 NORTH STATE STREET, CHICAGO, IL 60601

SUBWAY PLATFORM LEVEL PLAN - SOUTH

CDOT PROJECT D-1-209 | DATE: 9/9/2022

SPEC. NO.

DRAWING NO. SS-117

REVISION NO.4

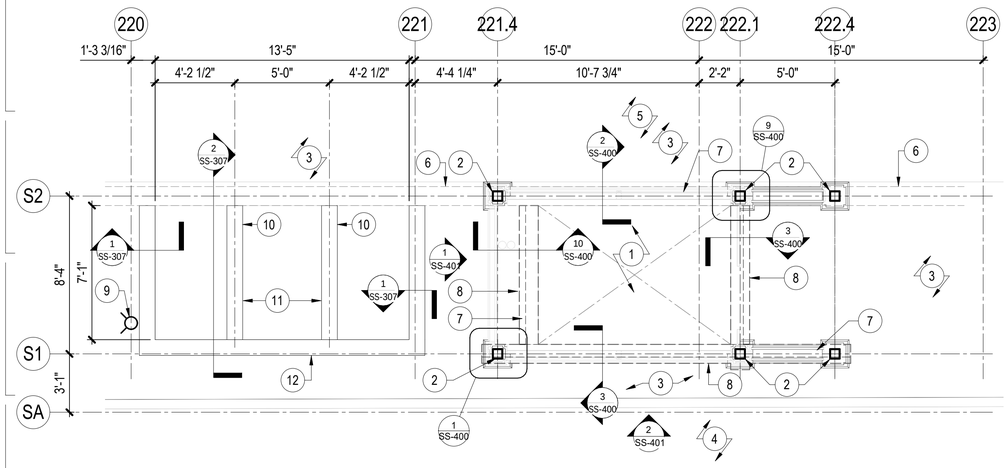

1 SUBWAY STREET LEVEL ENLARGED PLAN - NORTH

1/4" = 1'-0"

SUBWAY STREET LEVEL ENLARGED PLAN - NORTH KEY NOTES:

1. CUT AND REMOVE EXISTING SIDEWALK AS REQUIRED TO INSTALL NEW ELEVATOR AND ENCLOSURE. RE: CIVIL AND ARCHITECTURAL DRAWINGS FOR ADDITIONAL INFO.
2. HSS6x6x1/2 STEEL COLUMN.
3. RE: CIVIL FOR NEW SIDEWALK/PAVERS AS REQUIRED AROUND NEW ELEVATOR.
4. RE: CIVIL FOR NEW CURB AND STREET PAVEMENT AS REQUIRED.
5. EXISTING UNDERGROUND VAULT.
6. EXISTING VAULT WALL.
7. RE: ARCHITECTURAL FOR NEW ELEVATOR ENCLOSURE INFO.
8. 12"x12" CONCRETE BEAM REINF. W/ (3) #6 TOP & BOTT.; #4 STIRRUPS @ 4" O.C.
9. RE: CIVIL FOR NEW FIRE HYDRANT LOCATION AND ADDITIONAL INFO.
10. 10" CONCRETE WALL, REINF. W/ (2) LAYERS #5 @ 12" O.C. E.W. HOOK REINF. INTO PLANTER WALLS EACH ENDS.
11. BOLLARD WELDED TO EMBED PLATE 1/2x10x0'-10" W/ (4) 1/2"Ø x 6" EMBED CAST-IN-PLACE ANCHORS.
12. 10" THICK CONCRETE WALL.

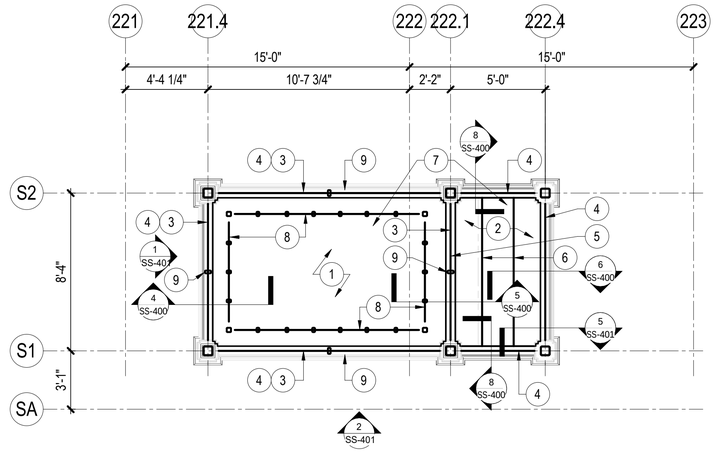

2 SUBWAY STREET LEVEL ENLARGED MAIN ROOF FRAMING PLAN - NORTH

1/4" = 1'-0"

SUBWAY STREET LEVEL ENLARGED MAIN ROOF FRAMING PLAN - KEY NOTES:

1. 2 1/2" NORMAL WEIGHT CONCRETE ON 1 1/2"x18 GAGE GALVANIZED COMPOSITE DECK, (4" TOTAL THICKNESS) REINF. W/ WWR 6x6 - W1.4xW1.4.
2. 1 1/2"x20 GAGE GALVANIZED ROOF DECK.
3. HSS12x6x1/2 HIGH ROOF BEAM.
4. HSS 12x6x1/2 LOW ROOF BEAM.
5. W10x54 LOW ROOF BEAM.
6. C5x9 ROOF BEAM.
7. RE: ARCHITECTURAL FOR ADDITIONAL ROOF INFO.
8. RE: UPPER ROOF PLAN THIS SHEET FOR STRUCTURAL FRAMING.
9. RE: ELEVATION FOR WINDOW FRAMING.

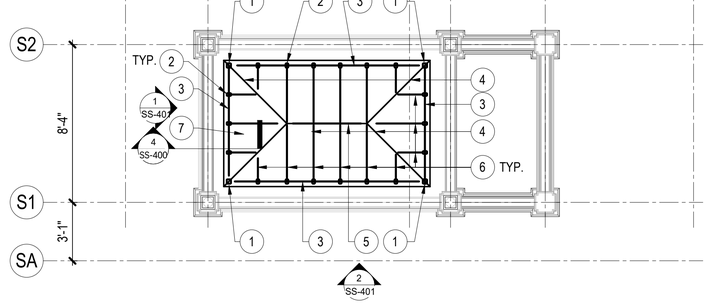

3 SUBWAY STREET LEVEL ENLARGED UPPER ROOF FRAMING PLAN - NORTH

1/4" = 1'-0"

SUBWAY STREET LEVEL ENLARGED UPPER ROOF FRAMING PLAN - NORTH KEY NOTES:

1. HSS 3x3x5/16 CORNER COLUMN.
2. HSS HSS3x2x5/16 INTERIOR COLUMN.
3. HSS 3x2x5/16 BEAM TOP AND BOTTOM.
4. HSS 3x2x5/16 HIP DIAGONAL BEAM.
5. HSS 3x2x5/16 RIDGE BEAM.
6. HSS 2x2x5/16 SLOPED BEAM.
7. RE: ARCHITECTURE FOR ROOF INFO.

TYPICAL PLAN NOTES:

1. REFERENCE CIVIL DRAWINGS FOR ALL UTILITIES, TO KNOW UNDERGROUND CONFLICTS AND RIGHT-OF-WAY LINES.
2. CONTRACTOR TO VERIFY ALL EXISTING STRUCTURES, UTILITIES, ETC PRIOR TO START OF CONSTRUCTION. ANY DISCREPANCIES BETWEEN DESIGN CONDITIONS SHALL IMMEDIATELY BE REPORTED TO THE COMMISSIONER.
3. REFERENCE SS-001 THRU SS-004 FOR STRUCTURAL GENERAL NOTES.
4. REFERENCE SS-010 THRU SS-021 FOR TYPICAL DETAILS.
5. REFERENCE ARCHITECTURAL DRAWINGS FOR WATERPROOFING DETAILS AND DIMENSIONS NOT SHOWN.
6. CONTRACTOR TO PROTECT ALL ITEMS TO REMAIN.
7. CONTRACTOR TO DETERMINE TSRS AND MAINTENANCE OF TRAFFIC. REFERENCE SS-001 THRU SS-003 AND SS-500 THRU SS-502 FOR NOTES AND SCHEMATIC LAYOUT OF TSRS.
8. REFERENCE GEOTECHNICAL REPORT FOR RECOMMENDATIONS AND REQUIREMENTS FOR SOIL AND CLSM BELOW STREET LEVEL.
9. REFERENCE ARCHITECTURAL DRAWINGS FOR ALL DOORS, WALLS AND WINDOW OPENINGS LOCATION AND SIZES.

DESIGN BY:									
DRAWN BY:									
CHECKED BY:		4	7/03/2023	ISSUED FOR BID					
		1	11/04/2022	ISSUED FOR PERMIT REVISION 1					
APPROVED BY:		0	9/9/2022	ISSUED FOR PERMIT	MMB	MDG	MJT		
CDOT/APPROVED BY:		NO.	DATE	REVISIONS	DES.	DRW.	CHK.	DCCO	CDOT

TRANSYSTEMS
222 SOUTH RIVERSIDE PLAZA SUITE 610
CHICAGO, ILLINOIS 60606

SKIDMORE, OWINGS & MERRILL LLP
224 SOUTH MICHIGAN AVENUE, SUITE 1000
CHICAGO, ILLINOIS 60604

CHICAGO DEPARTMENT OF TRANSPORTATION
DIVISION OF ENGINEERING

STATE / LAKE LOOP ELEVATED STATION
200 NORTH STATE STREET, CHICAGO, IL 60601

SPEC. NO.

SUBWAY STREET LEVEL ENLARGED PARTIAL PLAN AND ROOF PLANS - NORTH

DRAWING NO. SS-200

CDOT PROJECT D-1-209 | DATE: 9/9/2022 | REVISION NO.4

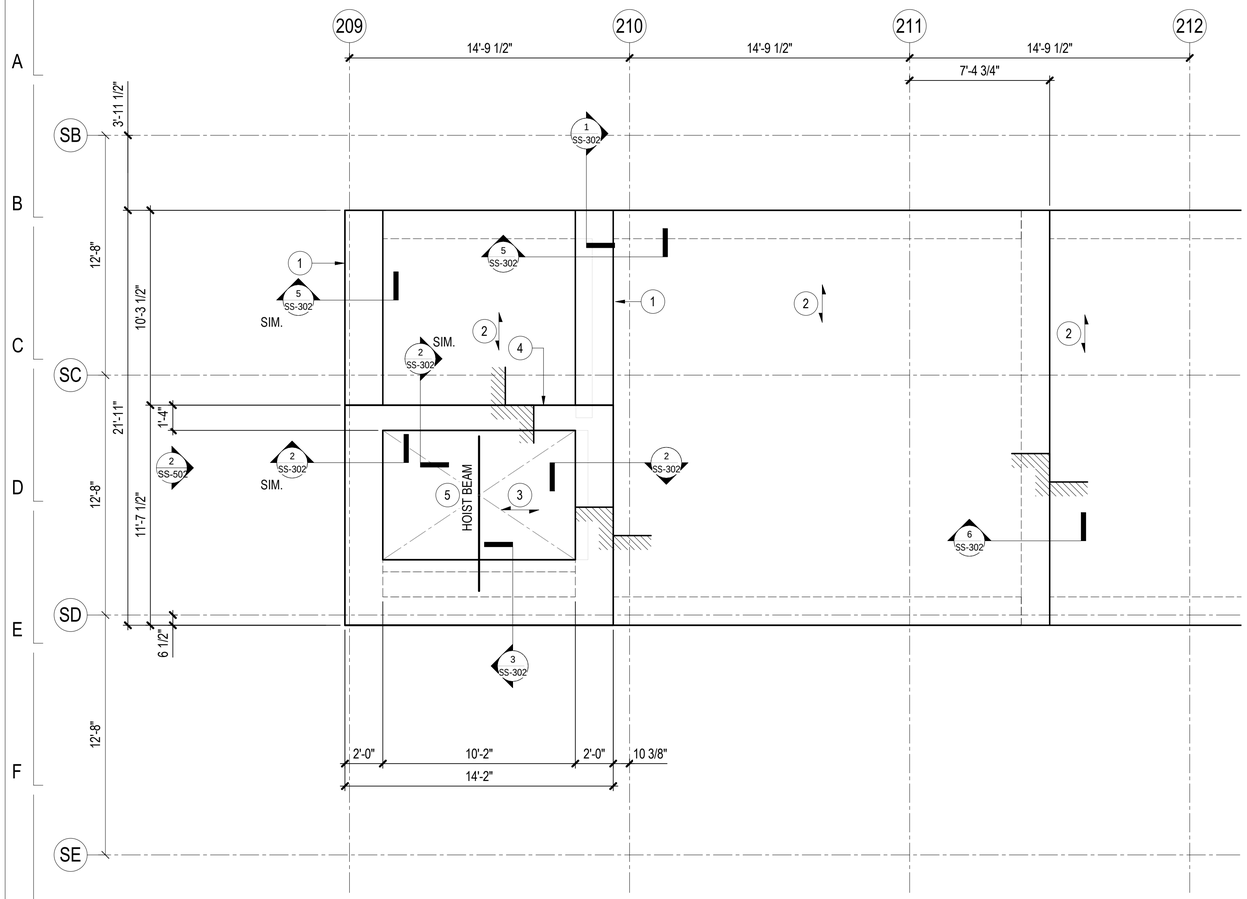

SUBWAY MEZZANINE LEVEL ROOF ENLARGED PLAN - SOUTH KEY NOTES:

1. 24"x40" DEEP CONCRETE BEAM REINF. W/ (6) #10 BOTTOM, (6) #8 TOP, (3) #6 EACH FACE AND #4 CLOSED STIRRUPS @ 6" O.C.
2. NEW 18" THICK CONCRETE SLAB. REINF. W/ #8 @ 6" O.C. BOTT. & #8 @ 12" O.C. TOP EAST/WEST; #5 @ 12" O.C. TOP & BOTT. NORTH/ SOUTH.
3. NEW 14" THICK CONCRETE ROOF SLAB REINF. W/ #6 @ 12" O.C. TOP & BOTT. EAST/WEST; #4 @ 12" O.C. NORTH/SOUTH.
4. 16"x40" CONCRETE BEAM REINF. W/ (4) #8 TOP & BOTTOM, (3) #5 EACH FACE AND #4 CLOSED STIRRUPS @ 8" O.C. HOOK REINF. INTO SUPPORTING BEAM.
5. FINAL HOIST BEAM SIZE TO BE DETERMINED BY ELEVATOR SUPPLIER. ATTACH HOIST BEAM TO CONCRETE WALLS WITH EMBED PLATE 1/2" THICK W/ (4) 1/2"Ø HEADED STUDS x 6" LONG EMBED W/ 4" GAUGE AND PITCH WELDED ALL AROUND WITH 5/16" WELD FROM HOIST BEAM TO PLATE. THE SIZE OF PLATE SHALL BE 8"x8".

TYPICAL PLAN NOTES:

1. REFERENCE CIVIL DRAWINGS FOR ALL UTILITIES, TO KNOW UNDERGROUND CONFLICTS AND RIGHT-OF-WAY LINES.
2. CONTRACTOR TO VERIFY ALL EXISTING STRUCTURES, UTILITIES, ETC PRIOR TO START OF CONSTRUCTION. ANY DISCREPANCIES BETWEEN DESIGN CONDITIONS SHALL IMMEDIATELY BE REPORTED TO THE COMMISSIONER.
3. REFERENCE SS-001 THRU SS-004 FOR STRUCTURAL GENERAL NOTES.
4. REFERENCE SS-010 THRU SS-021 FOR TYPICAL DETAILS.
5. REFERENCE ARCHITECTURAL DRAWINGS FOR WATERPROOFING DETAILS AND DIMENSIONS NOT SHOWN.
6. CONTRACTOR TO PROTECT ALL ITEMS TO REMAIN.
7. CONTRACTOR TO DETERMINE TSRS AND MAINTENANCE OF TRAFFIC. REFERENCE SS-001 THRU SS-003 AND SS-500 THRU SS-502 FOR NOTES AND SCHEMATIC LAYOUT OF TSRS.
8. REFERENCE GEOTECHNICAL REPORT FOR RECOMMENDATIONS AND REQUIREMENTS FOR SOIL AND CLSM BELOW STREET LEVEL.
9. REFERENCE ARCHITECTURAL DRAWINGS FOR ALL DOORS, WALLS AND WINDOW OPENINGS LOCATION AND SIZES.

1 SUBWAY MEZZANINE LEVEL ROOF ENLARGED ELEVATOR PLAN -SOUTH

1/4" = 1'-0"

DESIGN BY:										
DRAWN BY:										
CHECKED BY:		4	7/03/2023	ISSUED FOR BID						
APPROVED BY:		1	11/04/2022	ISSUED FOR PERMIT REVISION 1						
CDOT/APPROVED BY:		0	9/9/2022	ISSUED FOR PERMIT	MMB	MDG	MJT			
		NO.	DATE	REVISIONS	DES.	DRW.	CHK.	DCCO	CDOT	

TRANSYSTEMS
222 SOUTH RIVERSIDE PLAZA SUITE 610
CHICAGO, ILLINOIS 60606

SKIDMORE, OWINGS & MERRILL LLP
224 SOUTH MICHIGAN AVENUE, SUITE 1000
CHICAGO, ILLINOIS 60604

CHICAGO DEPARTMENT OF TRANSPORTATION
DIVISION OF ENGINEERING

STATE / LAKE LOOP ELEVATED STATION
200 NORTH STATE STREET, CHICAGO, IL 60601

SUBWAY MEZZANINE LEVEL ENLARGED ROOF PLAN - SOUTH

CDOT PROJECT D-1-209 | DATE: 9/9/2022

SPEC. NO.

DRAWING NO. SS-201

REVISION NO.4

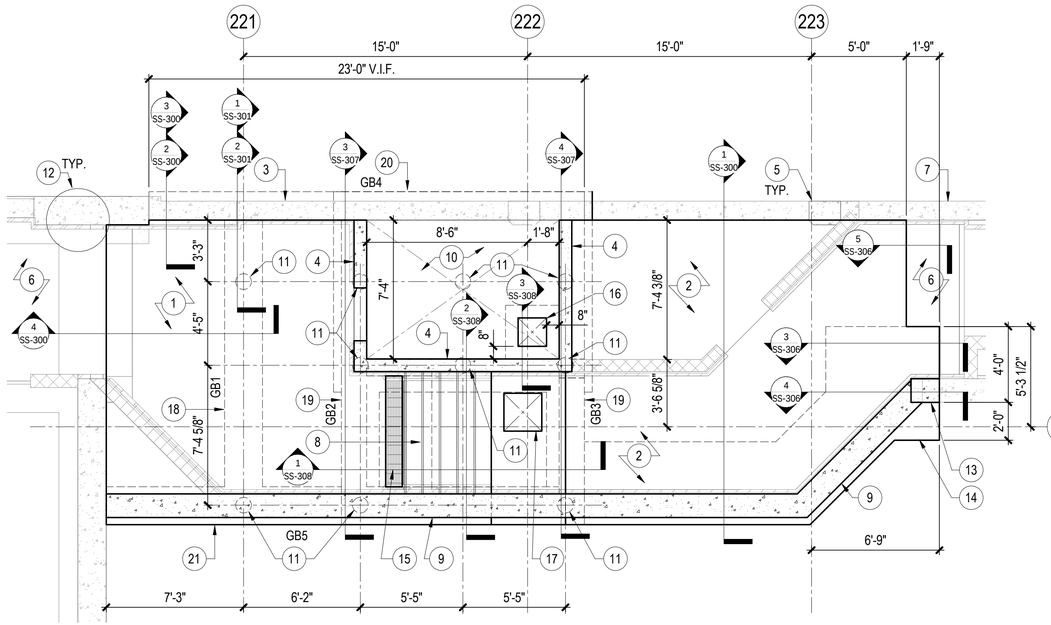

1 SUBWAY MEZZANINE LEVEL ENLARGED ELEVATOR PLAN - NORTH

1/4" = 1'-0"

SUBWAY MEZZANINE LEVEL ENLARGED PLAN - NORTH KEY NOTES:

1. NEW 1'-0" THICK CONCRETE STRUCTURAL SLAB, REINF. W/ #5 @ 12" O.C. TOP & BOTT. (NORTH/SOUTH) AND #5 @ 12" O.C. TOP & BOTT. (EAST/WEST), OVER 2" SAND SLURRY PROTECTION SLAB, OVER WATERPROOFING, OVER 2" MUD SLAB, OVER 6" MINIMUM CLSM. T.O. CONCRETE = -4'-1 1/2". RE: ARCH'L. DETAILS FOR WATER PROTECTION.
2. NEW 1'-3" THICK CONCRETE SLAB, REINF. W/ #5 @ 12" O.C. TOP & BOTT. EACH WAY, 2" SAND SLURRY PROTECTION SLAB, OVER WATERPROOFING, OVER 2" MUD SLAB, OVER 24" SELF COMPACTING STONE CA-1, OVER GEOTEXTILE FABRIC OR CLSM. T.O. CONCRETE = -1'-4 1/8". RE: ARCH'L. DETAILS FOR WATER PROTECTION. RE: GEOTECNICAL REPORT FOR UNDER SLAB REQUIREMENTS.
3. EXISTING WALL TO REMAIN ABOVE ELEV. -1'-4 1/8". EXTEND WALL AND UNDERPIN PER DETAILS.
4. NEW 8" THICK CONCRETE ELEVATOR WALL.
5. EXISTING 20" WIDE x 18" DEEP CONCRETE PILASTER, TYP. @ GRIDS.
6. EXISTING MAT SLAB TO REMAIN.
7. EXISTING CONCRETE WALL TO REMAIN.
8. NEW CONCRETE STAIRS.
9. NEW 1'-3" CONCRETE WALL.
10. 2'-6" THICK ELEVATOR MAT SLAB, REINF. W/ #6 @ 12" O.C. TOP & BOTT. EACH WAY.
11. NEW CONCRETE 9 5/8" DIA. MICROPILES. RE: S-012 FOR BATTER ONLY FOR EASTERN MICROPILES TO MISS SUBWAY TUBE.
12. EXISTING DRILLED SHAFT.
13. 18"x15" CONCRETE COLUMN, REINF. W/ (6) #6 VERT. AND #4 TIES @ 12" O.C.
14. 6'-0"x6'-0"x1'-9" FOOTING REINF. W/ #6 @ 12" O.C. EACH WAY TOP & BOTT.
15. RE: ARCH'L. AND PLUMBING FOR TRENCH DRAIN INFO.
16. 1'-6"x1'-6"x2'-0" SUMP PIT. PROVIDE L3x3x1/4 @ PERIMETER OF OPENING (EMBEDDED INTO MAT SLAB) AND STEEL GRATE OVER SUMP PIT. RE: 3/SS-308 FOR ADDITIONAL INFO.
17. FLOOR ACCESS PANEL RE: 1/AS-411 12/AS-601. PROVIDE L3x3x1/4 ALL AROUND OPENING W/ 1/2"Ø x 4" LONG H.S. @ 12" O.C. AND 3" FROM CORNER. RE: TO 1/SS-011 FOR ADDITIONAL REINF. AROUND OPENING.
18. GRADE BEAM GB1 = 24" WIDE x 30" DEEP W/ (5) #10 @TOP AND (3) #10 @ BOTT. W/ (2) LEGGED CLOSED STIRRUPS #4 @ 6" O.C. ALONG THE WHOLE LENGTH.
19. GRADE BEAM GB2 & GB3 = 24" WIDE x 30" DEEP W/ (4) #10 @ TOP AND (4) #10 @ BOTT. W/ (4) LEGGED CLOSED STIRRUPS #4 @ 6" O.C. ALONG THE WHOLE LENGTH.
20. GRADE BEAM GB4 = 18" WIDE x 46" DEEP W/ (3) #10 @TOP AND (3) #10 @ BOTT. W/ (2) LEGGED CLOSED STIRRUPS #4 @ 12" O.C. ALONG THE WHOLE LENGTH.
21. GRADE BEAM GB5 = 24" WIDE x 78" DEEP W/ (4) #8 @TOP AND (4) #8 @ BOTT. W/ (2) LEGGED CLOSED STIRRUPS #4 @ 12" O.C. ALONG THE WHOLE LENGTH.

TYPICAL PLAN NOTES:

1. REFERENCE CIVIL DRAWINGS FOR ALL UTILITIES, TO KNOW UNDERGROUND CONFLICTS AND RIGHT-OF-WAY LINES.
2. CONTRACTOR TO VERIFY ALL EXISTING STRUCTURES, UTILITIES, ETC PRIOR TO START OF CONSTRUCTION. ANY DISCREPANCIES BETWEEN DESIGN CONDITIONS SHALL IMMEDIATELY BE REPORTED TO THE COMMISSIONER.
3. REFERENCE SS-001 THRU SS-004 FOR STRUCTURAL GENERAL NOTES.
4. REFERENCE SS-010 THRU SS-021 FOR TYPICAL DETAILS.
5. REFERENCE ARCHITECTURAL DRAWINGS FOR WATERPROOFING DETAILS AND DIMENSIONS NOT SHOWN.
6. CONTRACTOR TO PROTECT ALL ITEMS TO REMAIN.
7. CONTRACTOR TO DETERMINE TSRS AND MAINTENANCE OF TRAFFIC. REFERENCE SS-001 THRU SS-003 AND SS-500 THRU SS-502 FOR NOTES AND SCHEMATIC LAYOUT OF TSRS.
8. REFERENCE GEOTECHNICAL REPORT FOR RECOMMENDATIONS AND REQUIREMENTS FOR SOIL AND CLSM BELOW STREET LEVEL.
9. REFERENCE ARCHITECTURAL DRAWINGS FOR ALL DOORS, WALLS AND WINDOW OPENINGS LOCATION AND SIZES.

DESIGN BY:									
DRAWN BY:									
CHECKED BY:		4	7/03/2023	ISSUED FOR BID					
APPROVED BY:		1	11/04/2022	ISSUED FOR PERMIT REVISION 1					
CDOT/APPROVED BY:		0	9/9/2022	ISSUED FOR PERMIT	MMB	MDG	MJT		
		NO.	DATE	REVISIONS	DES.	DRW.	CHK.	DCCO	CDOT

TRANSYSTEMS
222 SOUTH RIVERSIDE PLAZA SUITE 610
CHICAGO, ILLINOIS 60606

SKIDMORE, OWINGS & MERRILL LLP
224 SOUTH MICHIGAN AVENUE, SUITE 1000
CHICAGO, ILLINOIS 60604

STATE OF ILLINOIS
ANNA M. DUKE
062-057286
REGISTERED PROFESSIONAL ENGINEER

CHICAGO DEPARTMENT OF TRANSPORTATION
DIVISION OF ENGINEERING

STATE / LAKE LOOP ELEVATED STATION
200 NORTH STATE STREET, CHICAGO, IL 60601

SUBWAY MEZZANINE LEVEL ENLARGED PARTIAL PLAN - NORTH

CDOT PROJECT D-1-209 | DATE: 9/9/2022

SPEC. NO.

DRAWING NO. SS-202

REVISION NO.4

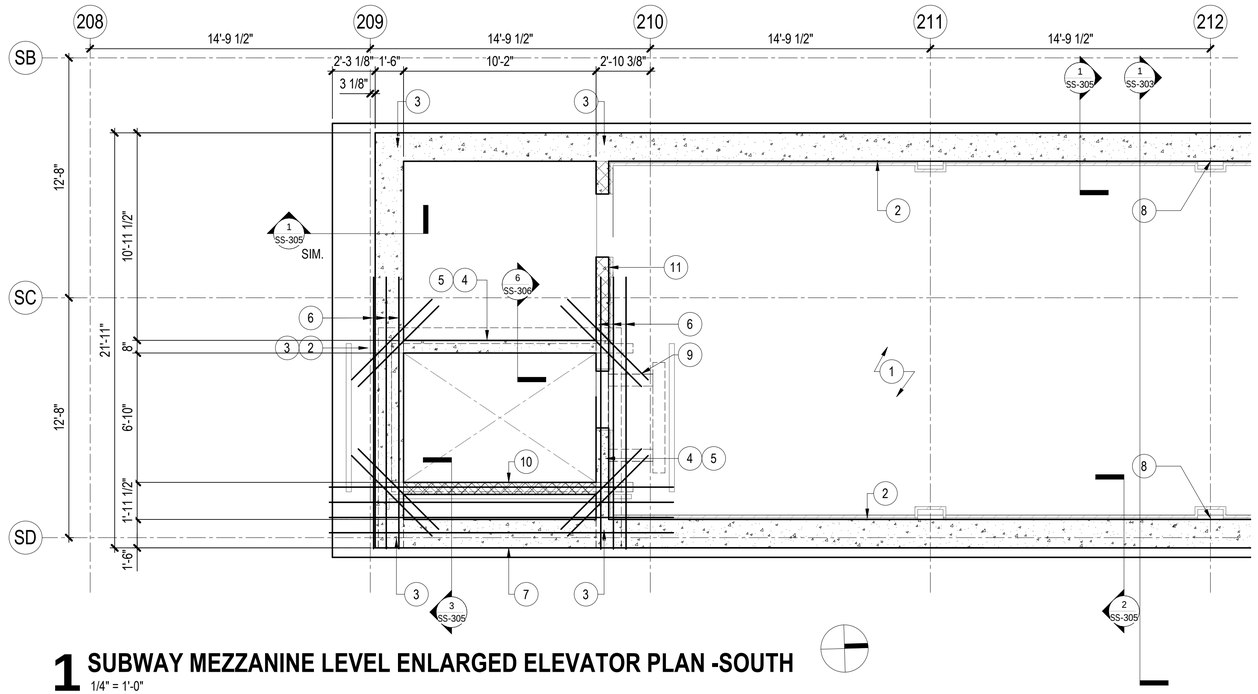

1 SUBWAY MEZZANINE LEVEL ENLARGED ELEVATOR PLAN -SOUTH

1/4" = 1'-0"

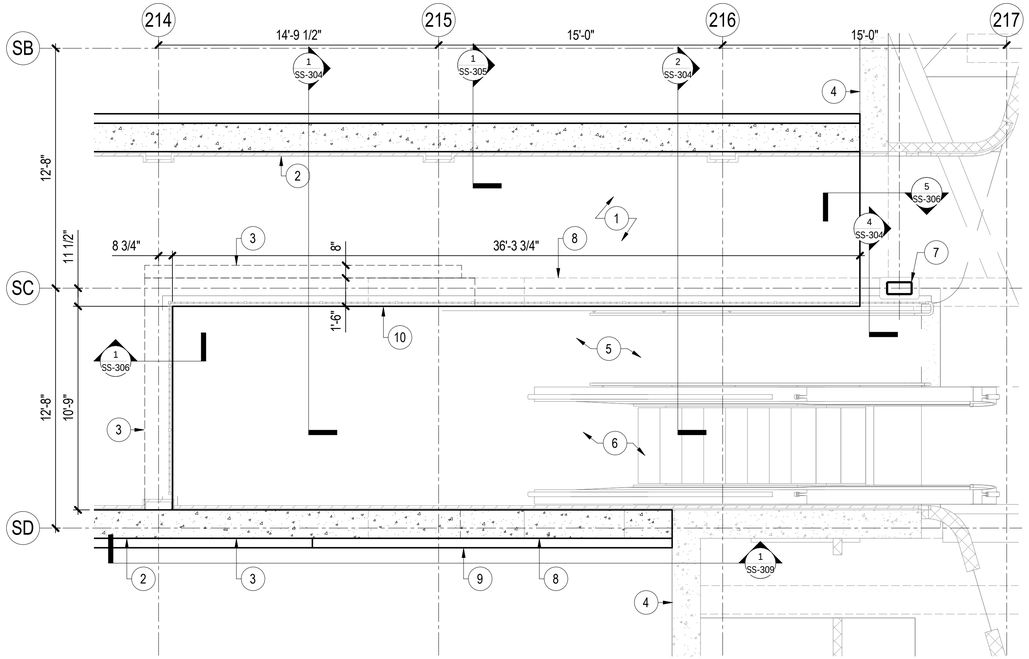

2 SUBWAY MEZZANINE LEVEL ENLARGED STAIR/ESCALATOR PLAN -SOUTH

1/4" = 1'-0"

SUBWAY MEZZANINE LEVEL ENLARGED ELEVATOR PLAN - SOUTH KEY NOTES:

1. NEW 24" THICK CONCRETE MAT SLAB, OVER 2" SAND SLURRY PROTECTION SLAB, OVER WATERPROOFING, OVER 2" CONCRETE MUDSLAB, OVER CLSM. REINFORCE MAT SLAB W/ #8 @ 6" O.C. TOP & BOTTOM TRANSVERSE (EAST/WEST), #5 @ 12" O.C. TOP & BOTTOM LONGITUDINAL (NORTH/SOUTH).
2. NEW 1'-6" THICK CONCRETE WALL, REINF. W/ #8 @ 8" O.C. VERT. EACH FACE, #5 @ 12" O.C. HORIZ. EACH FACE.
3. 18"x30" EFFECTIVE COLUMN CENTERED UNDER ROOF BEAM ABOVE, REINF. W/ (5) #8 @ 6" O.C. VERT. EACH FACE. MAINTAIN TYP. HORIZ. WALL REINF.
4. 8" CONCRETE WALL FROM MEZZANINE SLAB TO MEZZANINE ROOF. REINF. W/ (2) LAYERS OF #5 @ 12" O.C. VERT. AND #4 @ 12" O.C. HORIZ.
5. 16" CONCRETE WALL FROM MEZZANINE SLAB DOWN TO EXISTING CONCRETE SUBWAY LID.
6. (3) #8 @ 8" O.C. TOP & BOTT. @ NORTH AND SOUTH SIDES OF ELEVATOR OPENING, EXTEND REINF. 4'-0" BEYOND ELEVATOR OPENING AT WEST END, HOOK AT EAST END.
7. THICKEN WALL FROM 18" TO 41.5" AT ELEVATOR BELOW MEZZANINE SLAB.
8. RE: 2/AS-511 FOR PILASTER DIMENSIONS, PROVIDE (2) #5 VERTICAL AND #3 CLOSED STIRRUPS @ 12" O.C. IN PILASTER, TYP.
9. (2) #6x6'-0" TOP & BOTT. AT EACH CORNER OF ELEVATOR SHAFT.
10. 8" CMU WALL FULLY GROUTED, REINF. W/ #5 @ 16" O.C. PROVIDE (3) CELLS FULLY GROUTED AND REINF. AT GUIDERAIL, COORDINATE WITH ELEV. SUPPLIER.
11. 8" CMU WALL FULLY GROUTED, REINF. W/ #5 @ 16" O.C. RE: SS-020 FOR REINF. AT OPENINGS.

SUBWAY MEZZANINE LEVEL ENLARGED STAIR/ ESCALATOR PLAN - SOUTH KEY NOTES:

1. NEW 24" THICK CONCRETE MAT SLAB, OVER 2" SAND SLURRY PROTECTION SLAB, OVER WATERPROOFING, OVER 2" CONCRETE MUDSLAB, OVER CLSM. REINFORCE MAT SLAB W/ #8 @ 6" O.C. TOP & BOTTOM TRANSVERSE (EAST/WEST), #5 @ 12" O.C. TOP & BOTTOM LONGITUDINAL (NORTH/SOUTH).
2. NEW 1'-6" THICK CONCRETE WALL, REINF. W/ #8 @ 8" O.C. VERT. EACH FACE, #5 @ 12" O.C. HORIZ. EACH FACE.
3. NEW CLOSURE WALLS AT ESCALATOR/STAIR ATTACH TO EXISTING PARTIAL HEIGHT WALL.
4. EXISTING CONCRETE WALL TO REMAIN.
5. EXISTING STAIRS TO REMAIN.
6. EXISTING ESCALATOR TO REMAIN.
7. NEW HSS16x8x1/2 COLUMN FROM MEZZANINE FLOOR TO MEZZANINE ROOF.
8. EXIST. 1'-6" WALL BELOW MAT SLAB.
9. HORIZ. BEAM @ MEZZANINE LEVEL. (3) #8 TOP AND BOTTOM W/ (5) #8 EACH FACE W/ #4 CLOSED STIRRUPS @ 6" O.C.
10. PROVIDE STAINLESS STEEL EMBED PLATE WITH STAINLESS STEEL EXPANSION ANCHORS (MIN. (2) 1/2"Ø ANCHORS x 6" EMBED) FOR HAND RAIL ATTACHMENT ALONG THE WALL AT EQUAL SPACING.

TYPICAL PLAN NOTES:

1. REFERENCE CIVIL DRAWINGS FOR ALL UTILITIES, TO KNOW UNDERGROUND CONFLICTS AND RIGHT-OF-WAY LINES.
2. CONTRACTOR TO VERIFY ALL EXISTING STRUCTURES, UTILITIES, ETC PRIOR TO START OF CONSTRUCTION. ANY DISCREPANCIES BETWEEN DESIGN CONDITIONS SHALL IMMEDIATELY BE REPORTED TO THE COMMISSIONER.
3. REFERENCE SS-001 THRU SS-004 FOR STRUCTURAL GENERAL NOTES.
4. REFERENCE SS-010 THRU SS-021 FOR TYPICAL DETAILS.
5. REFERENCE ARCHITECTURAL DRAWINGS FOR WATERPROOFING DETAILS AND DIMENSIONS NOT SHOWN.
6. CONTRACTOR TO PROTECT ALL ITEMS TO REMAIN.
7. CONTRACTOR TO DETERMINE TSRS AND MAINTENANCE OF TRAFFIC. REFERENCE SS-001 THRU SS-003 AND SS-500 THRU SS-502 FOR NOTES AND SCHEMATIC LAYOUT OF TSRS.
8. REFERENCE GEOTECHNICAL REPORT FOR RECOMMENDATIONS AND REQUIREMENTS FOR SOIL AND CLSM BELOW STREET LEVEL.
9. REFERENCE ARCHITECTURAL DRAWINGS FOR ALL DOORS, WALLS AND WINDOW OPENINGS LOCATION AND SIZES.

DESIGN BY:									
DRAWN BY:									
CHECKED BY:		4	7/03/2023	ISSUED FOR BID					
APPROVED BY:		1	11/04/2022	ISSUED FOR PERMIT REVISION 1					
CDOT/APPROVED BY:		0	9/9/2022	ISSUED FOR PERMIT	MMB	MDG	MJT		
		NO.	DATE	REVISIONS	DES.	DRW.	CHK.	DCCO	CDOT

TRANSYSTEMS
222 SOUTH RIVERSIDE PLAZA SUITE 610
CHICAGO, ILLINOIS 60606

SKIDMORE, OWINGS & MERRILL LLP
224 SOUTH MICHIGAN AVENUE, SUITE 1000
CHICAGO, ILLINOIS 60604

CHICAGO DEPARTMENT OF TRANSPORTATION
DIVISION OF ENGINEERING

STATE / LAKE LOOP ELEVATED STATION
200 NORTH STATE STREET, CHICAGO, IL 60601

SUBWAY MEZZANINE LEVEL ENLARGED PARTIAL PLAN - SOUTH

CDOT PROJECT D-1-209 | DATE: 9/9/2022

SPEC. NO.

DRAWING NO. SS-203

REVISION NO.4

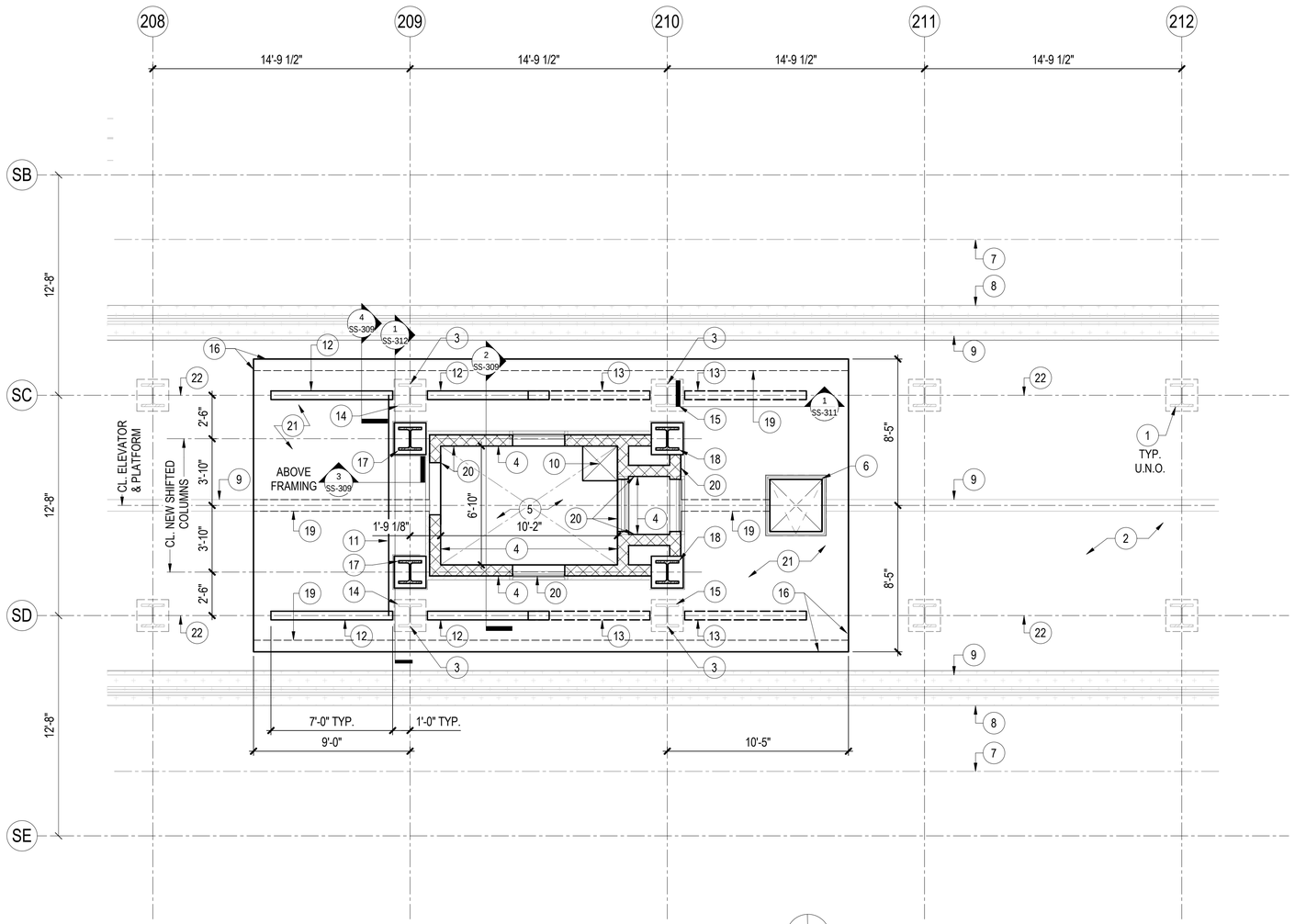

1 SUBWAY PLATFORM LEVEL NEW COLUMNS @ ELEVATOR PLAN - SOUTH

1/4" = 1'-0"

SUBWAY PLATFORM LEVEL ENLARGED PLAN - SOUTH KEY NOTES:

1. EXISTING STEEL COLUMNS TO REMAIN.
2. EXISTING ELEVATED PLATFORM SLAB TO REMAIN.
3. EXISTING STEEL COLUMNS TO BE REMOVED.
4. 8" CMU WALLS AT PERIMETER OF ELEVATED PLATFORM TO SUBWAY MAT. FULLY GROUT ALL CELLS, REINF. W/ #5 @ 8" O.C.
5. CUT EXISTING ELEVATED PLATFORM SLAB FOR ELEVATOR PENETRATION.
6. NEW ACCESS HATCH. PROVIDE L3x3x1/4 ALL AROUND THE OPENING W/ 1/2"Ø x 4" LONG H.S. @ 12" O.C. AND 3" FROM CORNERS, RE: AS-601 FOR ADDITIONAL INFO.
7. CENTERLINE OF EXISTING SUBWAY TRACKS.
8. EXISTING TACTILE STRIP TO REMAIN AT EDGE OF PLATFORM.
9. EXISTING CONCRETE WALL BELOW PLATFORM SLAB.
10. SUMP PUMP CUT INTO EXISTING SUBWAY FOUNDATION MAT. LOCATION AND SIZE TO BE COORDINATED W/ ARCH'L. AND PLUMBING. PROVIDE ANGLE FRAME @ PERIMETER OF OPENING AND STEEL GRATE OVER SUMP PIT.
11. LIGHT TRAY SUPPORT TUBE HSS 3x8x1/8 L.D.V.
12. STAGE 1 TEMPORARY SHORING (4) LOCATIONS.
13. STAGE 2 TEMPORARY SHORING (4) LOCATIONS
14. STAGE 1 EXIST. COLUMNS TO BE REMOVED ONLY AFTER SHORING IS IN PLACE AT (4) LOCATIONS.
15. STAGE 2 EXIST. COLUMNS TO BE REMOVED ONLY AFTER STAGE 1 IS COMPLETED AND SHORING IS IN PLACE AT (4) LOCATIONS.
16. LIMITS OF PLATFORM DEMOLITION. PROVIDE TEMPORARY SHORING TO SUPPORT EXISTING PLATFORM DURING REMOVAL AND REPLACEMENT. EXISTING REINFORCEMENT SHALL BE CLEANED, REUSED AND SPLICED WITH NEW REINFORCEMENT. DAMAGED OR DETERIORATED REINFORCING SHALL BE REPLACED IN KIND.
17. STAGE 1 NEW COLUMNS (W14x211).
18. STAGE 2 NEW COLUMNS (W14x211).
19. NEW 8" THICK CONCRETE WALL BELOW PLATFORM SLAB.
20. NEW 8" CONCRETE WALL BELOW ALL NEW CMU WALL RE: 2/SS-309 FOR SIMILAR DETAILS.
21. NEW 7" THICK CONCRETE SLAB WITH 1 1/2" TOPPING. RE: ARCH'L. FOR TOPPING INFO. NEW SLAB AND TOPPING TO MATCH EXISTING TOPPING AND SLAB THICKNESS.
22. EXISTING S20x75 BEAMS AT TOP OF COLUMN ELEVATION. RE: 1/SS-312 FOR LOCATION.

TYPICAL PLAN NOTES:

1. REFERENCE CIVIL DRAWINGS FOR ALL UTILITIES, TO KNOW UNDERGROUND CONFLICTS AND RIGHT-OF-WAY LINES.
2. CONTRACTOR TO VERIFY ALL EXISTING STRUCTURES, UTILITIES, ETC PRIOR TO START OF CONSTRUCTION. ANY DISCREPANCIES BETWEEN DESIGN CONDITIONS SHALL IMMEDIATELY BE REPORTED TO THE COMMISSIONER.
3. REFERENCE SS-001 THRU SS-004 FOR STRUCTURAL GENERAL NOTES.
4. REFERENCE SS-010 THRU SS-021 FOR TYPICAL DETAILS.
5. REFERENCE ARCHITECTURAL DRAWINGS FOR WATERPROOFING DETAILS AND DIMENSIONS NOT SHOWN.
6. CONTRACTOR TO PROTECT ALL ITEMS TO REMAIN.
7. CONTRACTOR TO DETERMINE TSRS AND MAINTENANCE OF TRAFFIC. REFERENCE SS-001 THRU SS-003 AND SS-500 THRU SS-502 FOR NOTES AND SCHEMATIC LAYOUT OF TSRS.
8. REFERENCE GEOTECHNICAL REPORT FOR RECOMMENDATIONS AND REQUIREMENTS FOR SOIL AND CLSM BELOW STREET LEVEL.
9. REFERENCE ARCHITECTURAL DRAWINGS FOR ALL DOORS, WALLS AND WINDOW OPENINGS LOCATION AND SIZES.

DESIGN BY:									
DRAWN BY:									
CHECKED BY:		4	7/03/2023	ISSUED FOR BID					
APPROVED BY:		1	11/04/2022	ISSUED FOR PERMIT REVISION 1					
CDOT/APPROVED BY:		0	9/9/2022	ISSUED FOR PERMIT	MMB	MDG	MJT		
		NO.	DATE	REVISIONS	DES.	DRW.	CHK.	DCCO	CDOT

TRANSYSTEMS
222 SOUTH RIVERSIDE PLAZA SUITE 610
CHICAGO, ILLINOIS 60606

SKIDMORE, OWINGS & MERRILL LLP
224 SOUTH MICHIGAN AVENUE, SUITE 1000
CHICAGO, ILLINOIS 60604

STATE OF ILLINOIS — ANNA M. DUKES — 062-067886 — LICENSED PROFESSIONAL ENGINEER

CHICAGO DEPARTMENT OF TRANSPORTATION
DIVISION OF ENGINEERING

STATE / LAKE LOOP ELEVATED STATION
200 NORTH STATE STREET, CHICAGO, IL 60601

SUBWAY PLATFORM LEVEL ENLARGED PARTIAL PLAN - SOUTH

CDOT PROJECT D-1-209 | DATE: 9/9/2022

SPEC. NO.

DRAWING NO. SS-204

REVISION NO.4

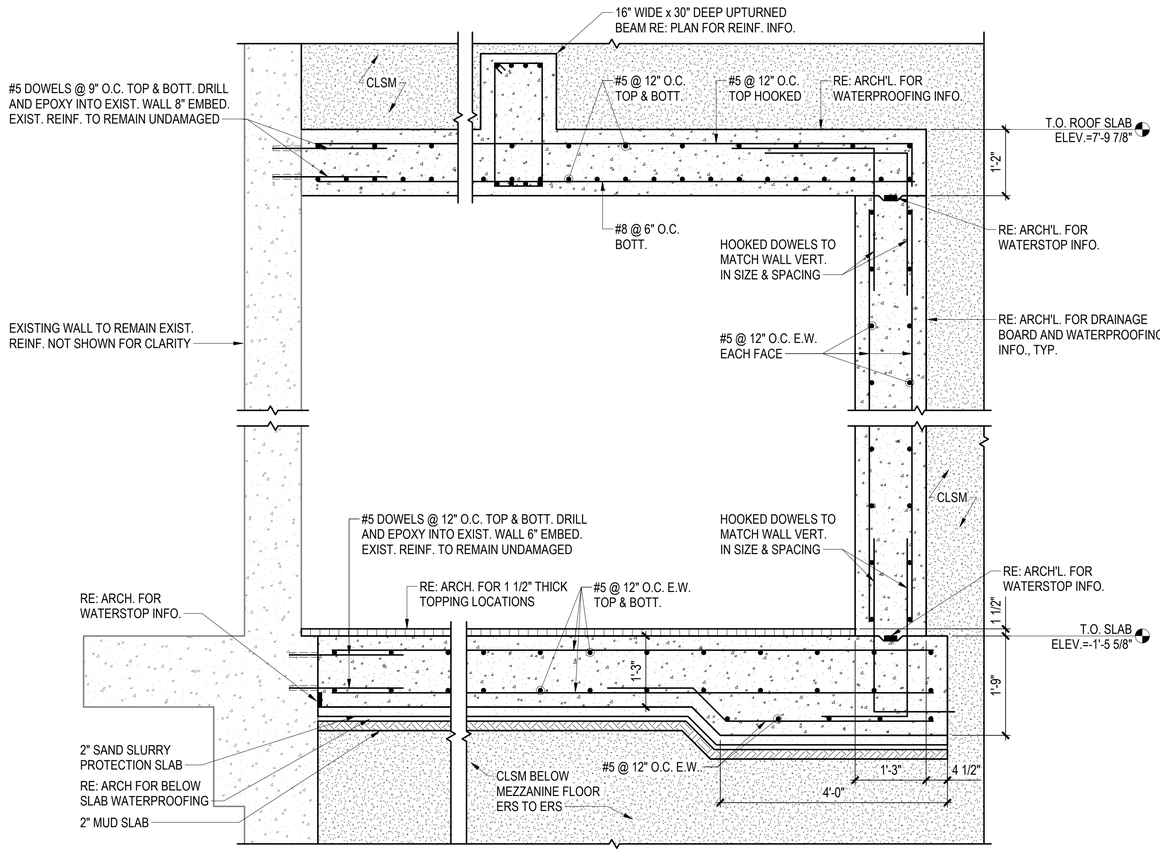

1 SECTION
3/4" = 1'-0"

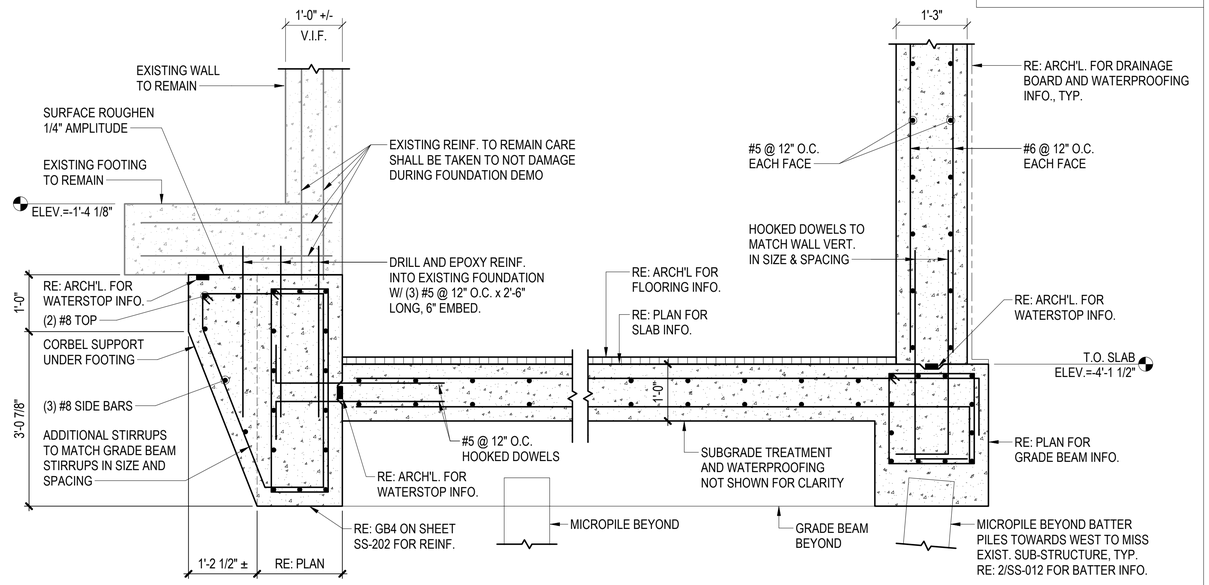

2 SECTION
3/4" = 1'-0"

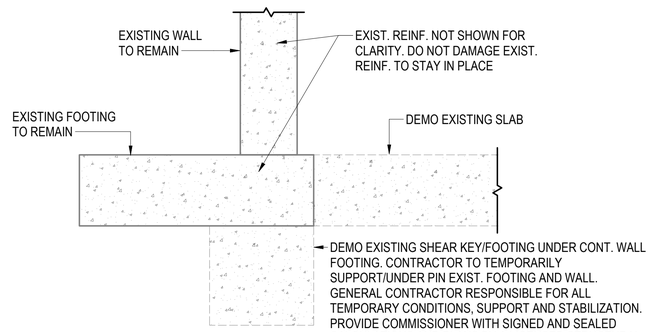

3 SECTION
3/4" = 1'-0"

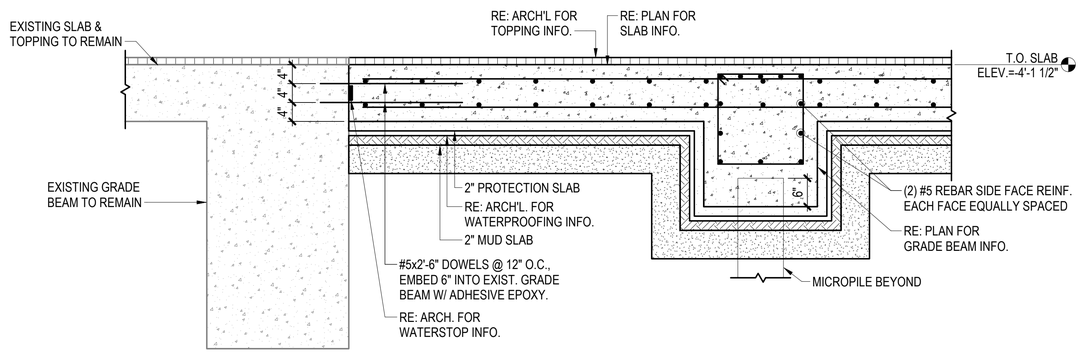

4 SECTION
3/4" = 1'-0"

NO.	DATE	REVISIONS	DES.	DRW.	CHK.	DCCO	CDOT
4	7/03/2023	ISSUED FOR BID					
2	1/13/2023	ISSUED FOR PERMIT REVISION 2					
1	11/04/2022	ISSUED FOR PERMIT REVISION 1					
0	9/9/2022	ISSUED FOR PERMIT	MMB	MDG	MJT		

DESIGN BY:
DRAWN BY:
CHECKED BY:
APPROVED BY:
CDOT/APPROVED BY:

TRANSYSTEMS
222 SOUTH RIVERSIDE PLAZA SUITE 610
CHICAGO, ILLINOIS 60606

SKIDMORE, OWINGS & MERRILL LLP
224 SOUTH MICHIGAN AVENUE, SUITE 1000
CHICAGO, ILLINOIS 60604

ANNA M. NUKES
062-071986
REGISTERED PROFESSIONAL ENGINEER
STATE OF ILLINOIS

CHICAGO DEPARTMENT OF TRANSPORTATION
DIVISION OF ENGINEERING

STATE / LAKE LOOP ELEVATED STATION
200 NORTH STATE STREET, CHICAGO, IL 60601

SPEC. NO.

SECTIONS AND DETAILS

DRAWING NO.
SS-300

CDOT PROJECT D-1-209

DATE: 9/9/2022

REVISION NO.4

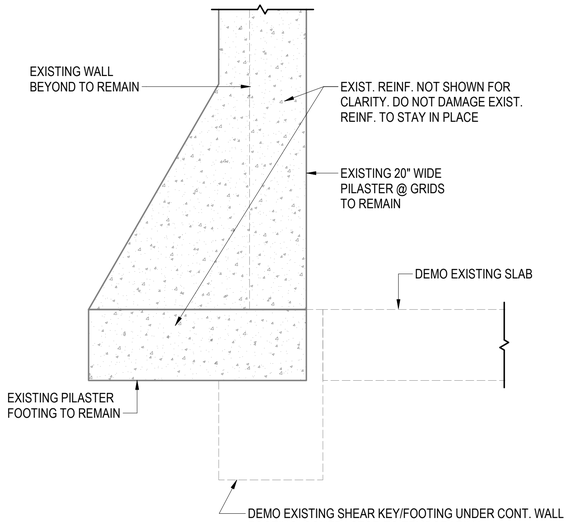

1 SECTION
3/4" = 1'-0"

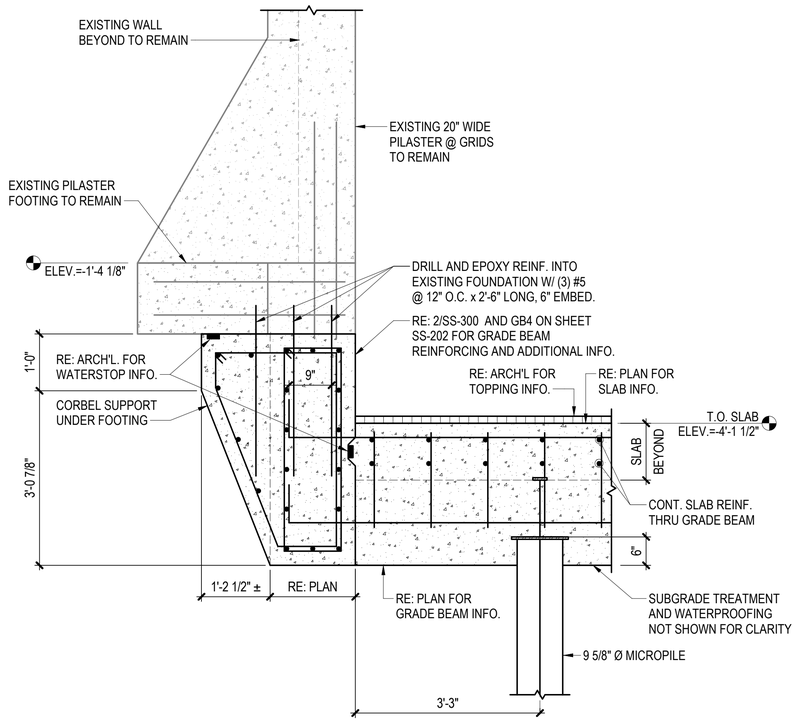

2 SECTION
3/4" = 1'-0"

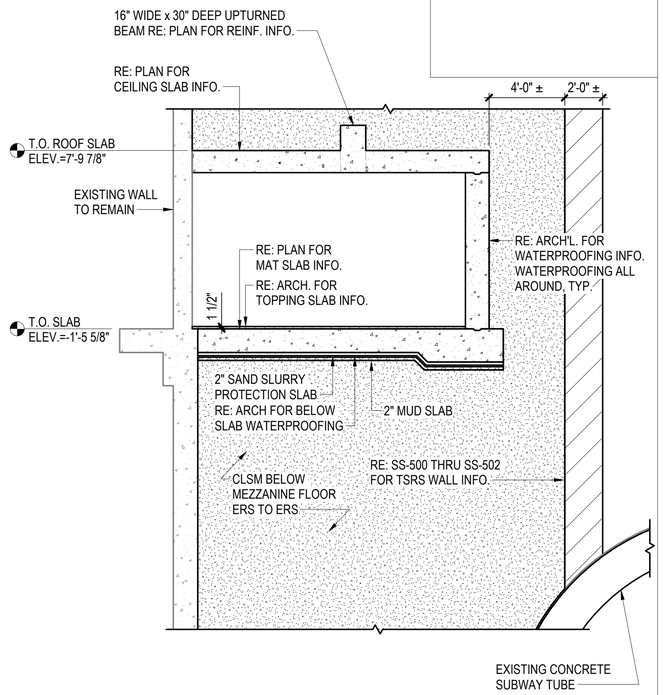

3 SECTION
1/4" = 1'-0"

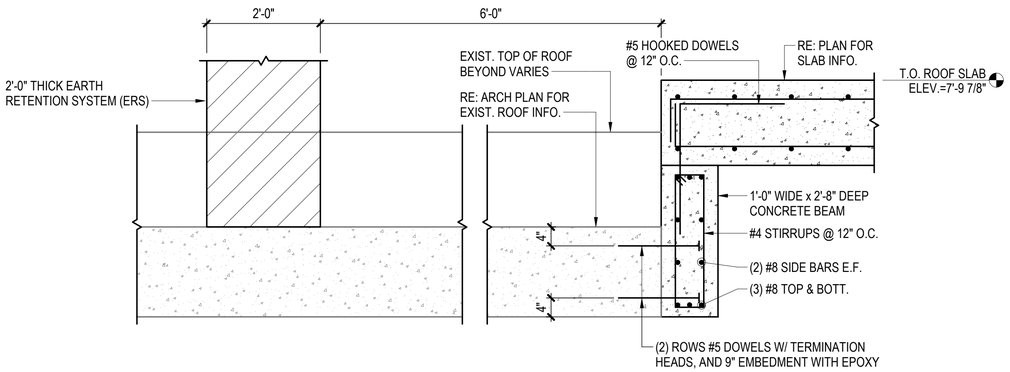

4 SECTION
3/4" = 1'-0"

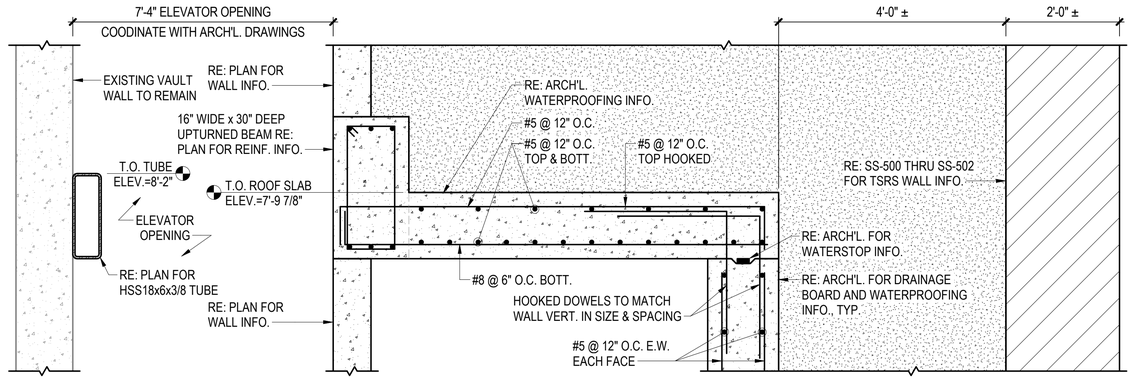

5 SECTION
3/4" = 1'-0"

NO.	DATE	REVISIONS	DES.	DRW.	CHK.	DCCO	CDOT
4	7/03/2023	ISSUED FOR BID					
2	1/13/2023	ISSUED FOR PERMIT REVISION 2					
1	11/04/2022	ISSUED FOR PERMIT REVISION 1					
0	9/9/2022	ISSUED FOR PERMIT	MMB	MDG	MJT		

DESIGN BY:
DRAWN BY:
CHECKED BY:
APPROVED BY:
CDOT/APPROVED BY:

TRANSYSTEMS
222 SOUTH RIVERSIDE PLAZA SUITE 610
CHICAGO, ILLINOIS 60606

SKIDMORE, OWINGS & MERRILL LLP
224 SOUTH MICHIGAN AVENUE, SUITE 1000
CHICAGO, ILLINOIS 60604

ANNA M. DUKES
062-037680
LICENSED PROFESSIONAL ENGINEER
STATE OF ILLINOIS

CHICAGO DEPARTMENT OF TRANSPORTATION
DIVISION OF ENGINEERING

STATE / LAKE LOOP ELEVATED STATION
200 NORTH STATE STREET, CHICAGO, IL 60601

SECTIONS AND DETAILS

CDOT PROJECT D-1-209 | DATE: 9/9/2022

SPEC. NO.

DRAWING NO. SS-301

REVISION NO.4

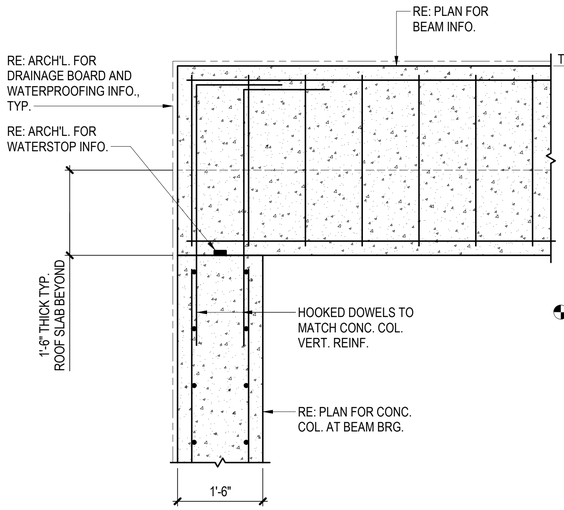

1 SECTION
3/4" = 1'-0"

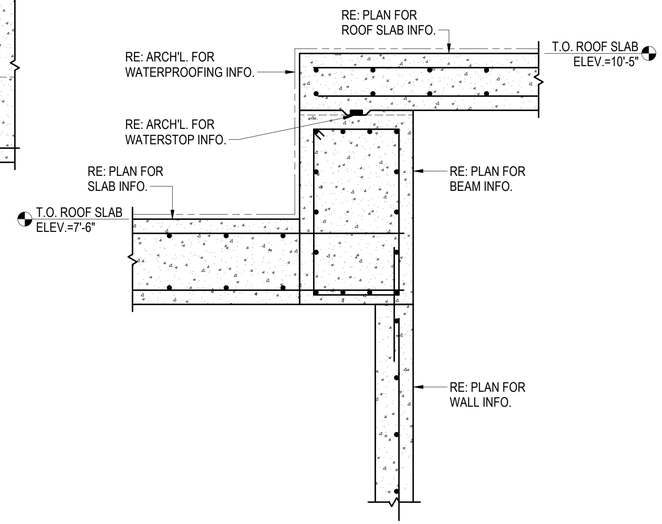

2 SECTION
3/4" = 1'-0"

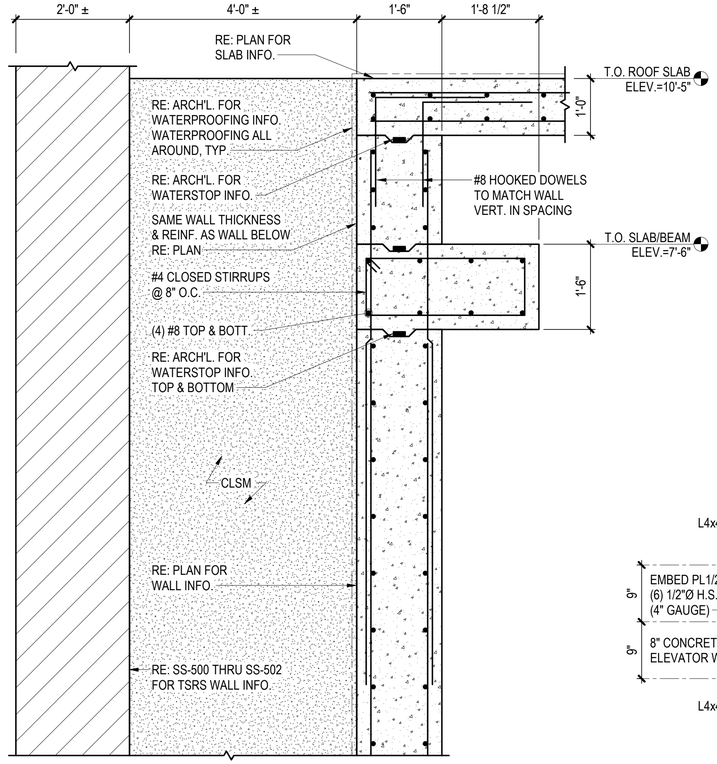

3 SECTION
3/4" = 1'-0"

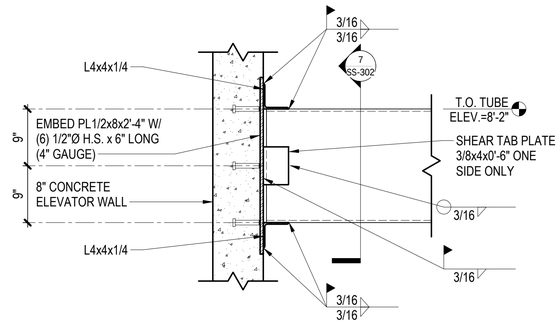

4 SECTION
1" = 1'-0"

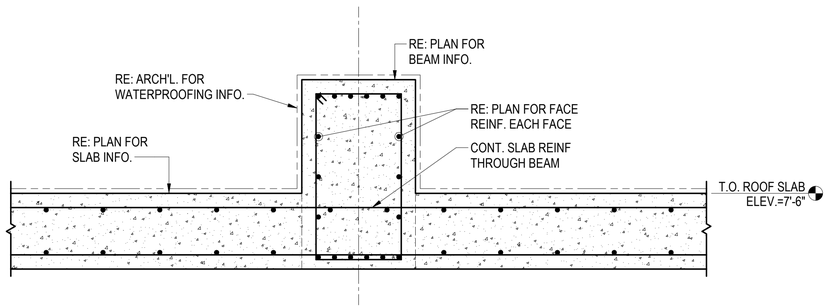

5 SECTION
3/4" = 1'-0"

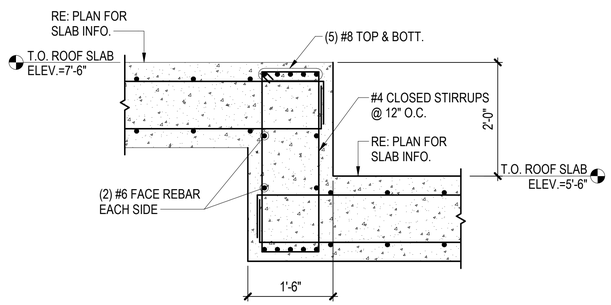

6 SECTION
3/4" = 1'-0"

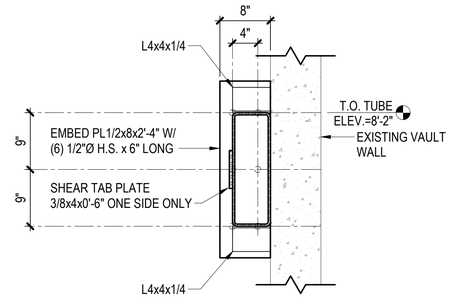

7 SECTION
1" = 1'-0"

DESIGN BY:									
DRAWN BY:									
CHECKED BY:		4	7/03/2023	ISSUED FOR BID					
APPROVED BY:		1	11/04/2022	ISSUED FOR PERMIT REVISION 1					
CDOT/APPROVED BY:		0	9/9/2022	ISSUED FOR PERMIT	MMB	MDG	MJT		
		NO.	DATE	REVISIONS	DES.	DRW.	CHK.	DCCO	CDOT

TRANSYSTEMS
222 SOUTH RIVERSIDE PLAZA SUITE 610
CHICAGO, ILLINOIS 60606

SKIDMORE, OWINGS & MERRILL LLP
224 SOUTH MICHIGAN AVENUE, SUITE 1000
CHICAGO, ILLINOIS 60604

STATE OF ILLINOIS — ANNA M. DUKES — 062-157292 — LICENSED PROFESSIONAL ENGINEER

CHICAGO DEPARTMENT OF TRANSPORTATION
DIVISION OF ENGINEERING

STATE / LAKE LOOP ELEVATED STATION
200 NORTH STATE STREET, CHICAGO, IL 60601

SECTIONS AND DETAILS

CDOT PROJECT D-1-209

DATE: 9/9/2022

SPEC. NO.

DRAWING NO.
SS-302

REVISION NO.4

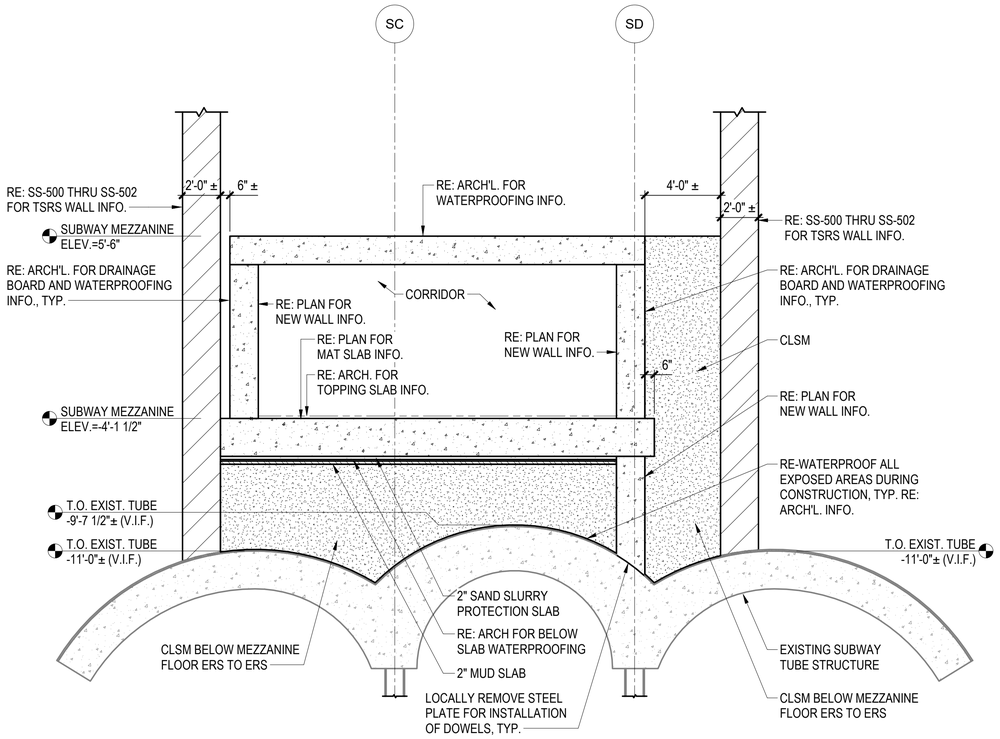

1 SECTION
1/4" = 1'-0"

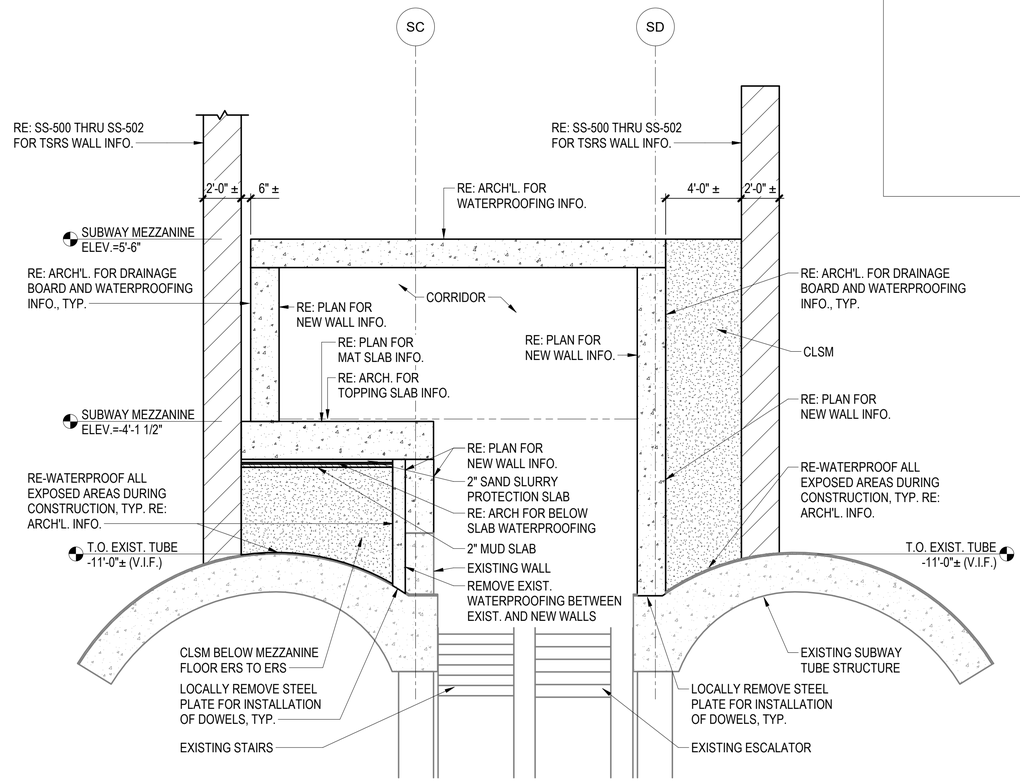

2 SECTION
1/4" = 1'-0"

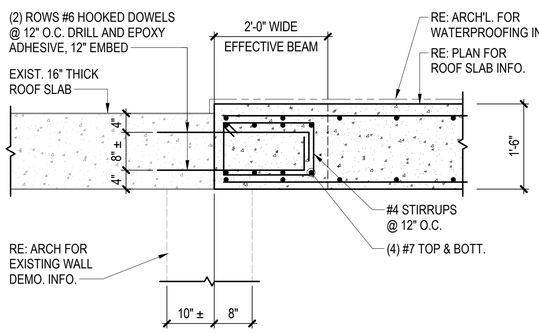

3 SECTION
3/4" = 1'-0"

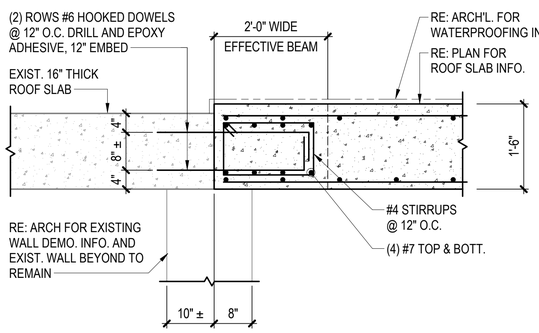

4 SECTION
3/4" = 1'-0"

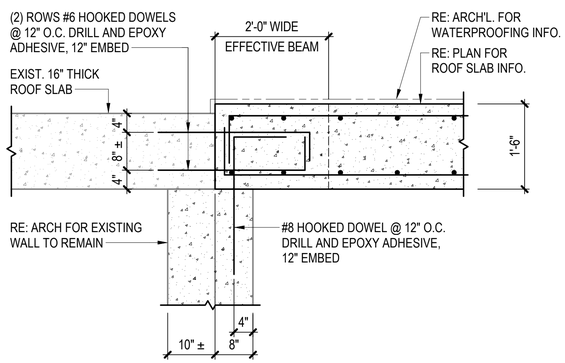

5 SECTION
3/4" = 1'-0"

DESIGN BY:									
DRAWN BY:									
CHECKED BY:		4	7/03/2023	ISSUED FOR BID					
APPROVED BY:		2	1/13/2023	ISSUED FOR PERMIT REVISION 2					
CDOT/APPROVED BY:		1	11/04/2022	ISSUED FOR PERMIT REVISION 1					
		0	9/9/2022	ISSUED FOR PERMIT	MMB	MDG	MJT		
		NO.	DATE	REVISIONS	DES.	DRW.	CHK.	DCCO	CDOT

TRANSYSTEMS
222 SOUTH RIVERSIDE PLAZA SUITE 610
CHICAGO, ILLINOIS 60606

SKIDMORE, OWINGS & MERRILL LLP
224 SOUTH MICHIGAN AVENUE, SUITE 1000
CHICAGO, ILLINOIS 60604

CHICAGO DEPARTMENT
OF TRANSPORTATION
DIVISION OF ENGINEERING

STATE / LAKE LOOP ELEVATED STATION
200 NORTH STATE STREET, CHICAGO, IL 60601

SECTIONS AND DETAILS

CDOT PROJECT D-1-209

DATE: 9/9/2022

SPEC. NO.

DRAWING NO.
SS-303

REVISION NO.4

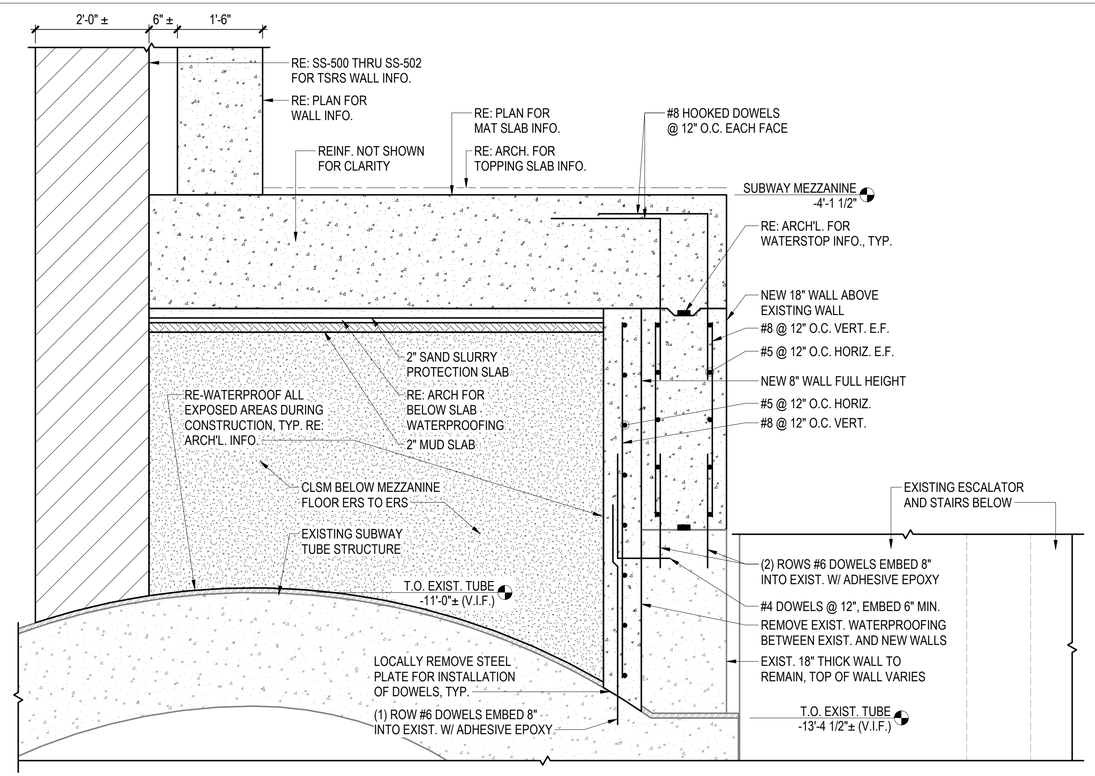

1 SECTION
3/4" = 1'-0"

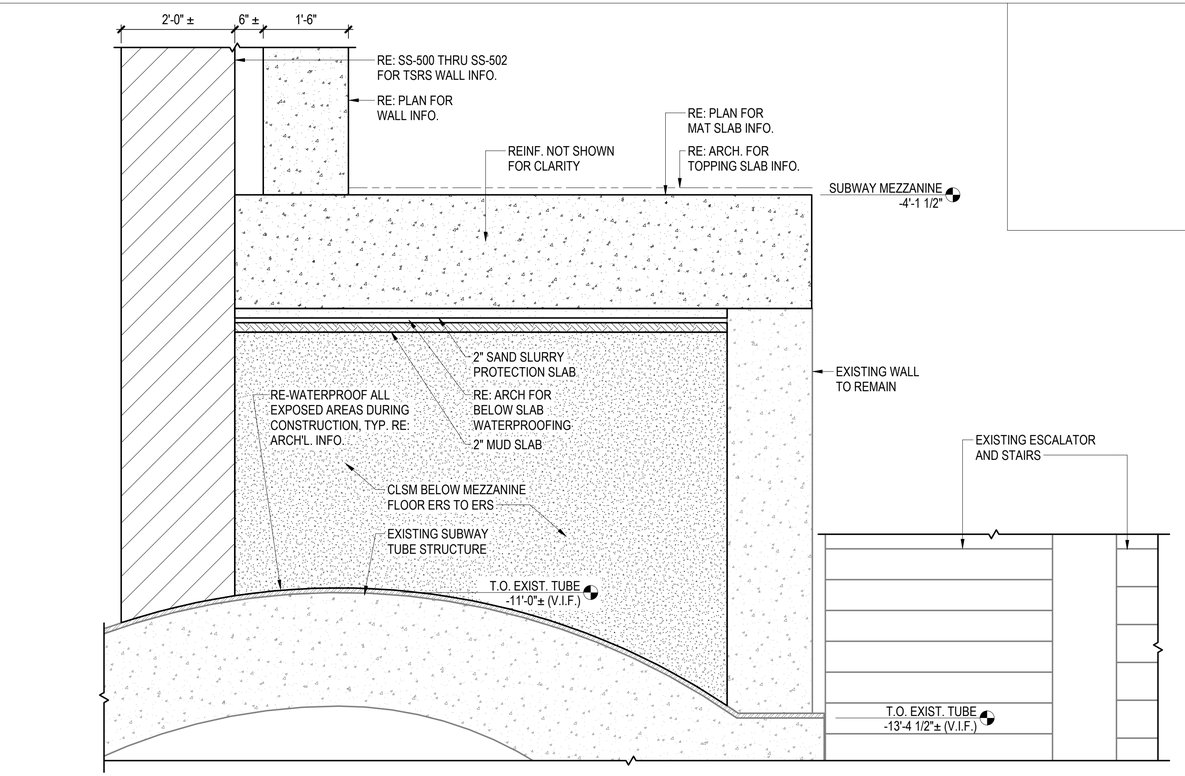

2 SECTION
3/4" = 1'-0"

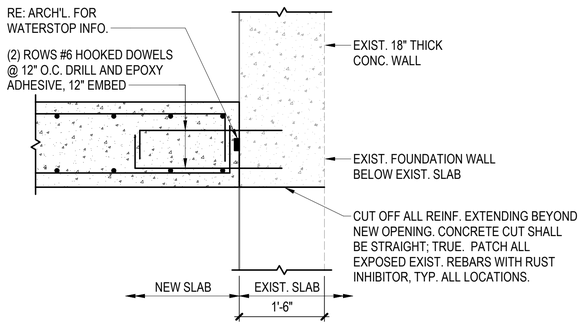

3 SECTION
3/4" = 1'-0"

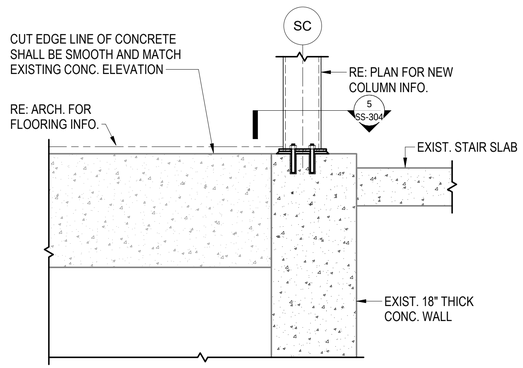

4 SECTION
3/4" = 1'-0"

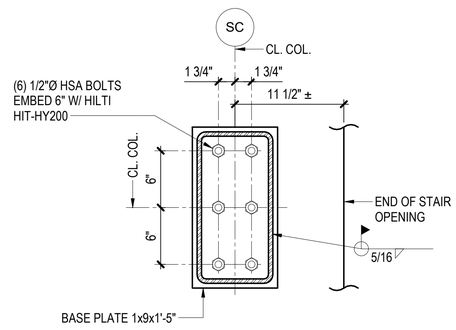

5 SECTION
1 1/2" = 1'-0"

DESIGN BY:										
DRAWN BY:										
CHECKED BY:		4	7/03/2023	ISSUED FOR BID						
APPROVED BY:		1	11/04/2022	ISSUED FOR PERMIT REVISION 1						
CDOT/APPROVED BY:		0	9/9/2022	ISSUED FOR PERMIT	MMB	MDG	MJT			
		NO.	DATE	REVISIONS	DES.	DRW.	CHK.	DCCO	CDOT	

TRANSYSTEMS
222 SOUTH RIVERSIDE PLAZA SUITE 610
CHICAGO, ILLINOIS 60606

SKIDMORE, OWINGS & MERRILL LLP
224 SOUTH MICHIGAN AVENUE, SUITE 1000
CHICAGO, ILLINOIS 60604

STATE OF ILLINOIS — ANNA M. DUKES — 062-157490 — LICENSED PROFESSIONAL ENGINEER

CHICAGO DEPARTMENT OF TRANSPORTATION
DIVISION OF ENGINEERING

STATE / LAKE LOOP ELEVATED STATION
200 NORTH STATE STREET, CHICAGO, IL 60601

SECTIONS AND DETAILS

CDOT PROJECT D-1-209 | DATE: 9/9/2022

SPEC. NO.

DRAWING NO. SS-304

REVISION NO.4

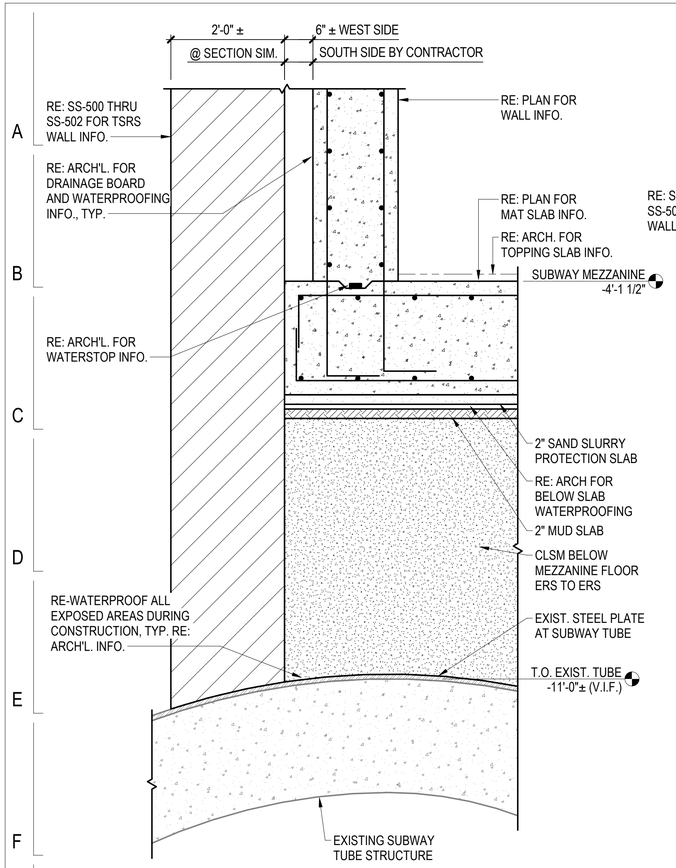

1 SECTION
3/4" = 1'-0"

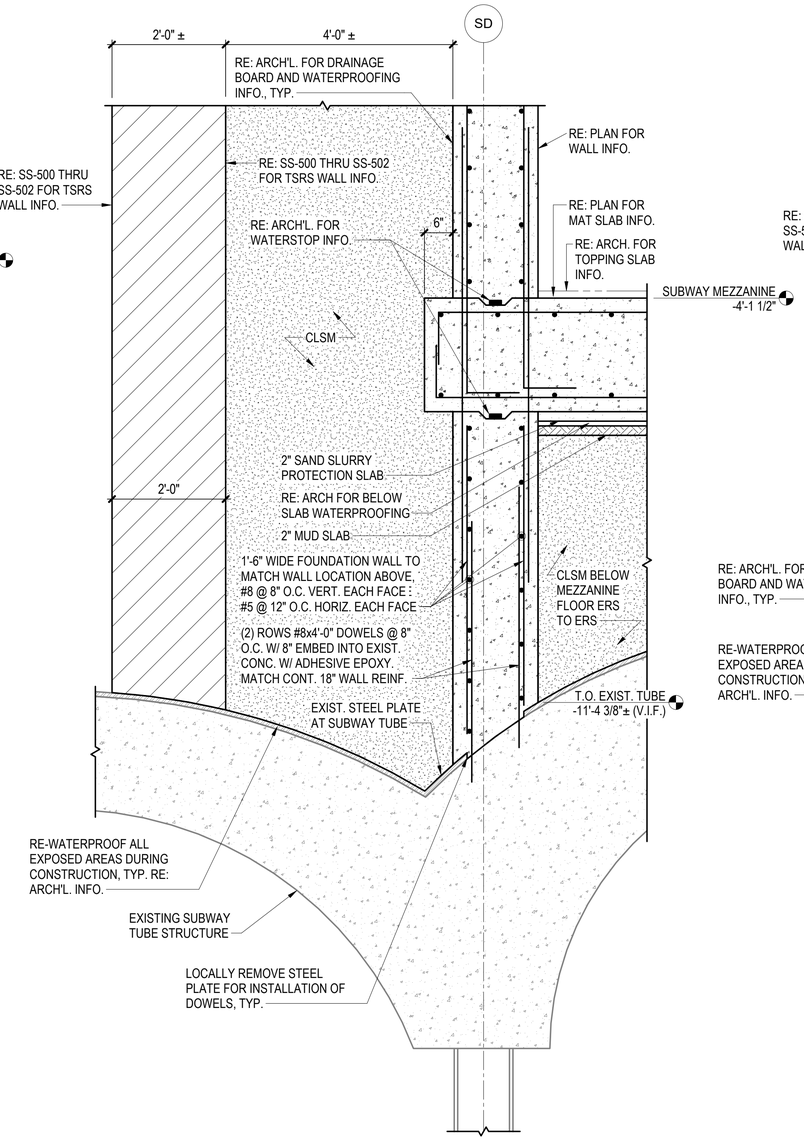

2 SECTION
3/4" = 1'-0"

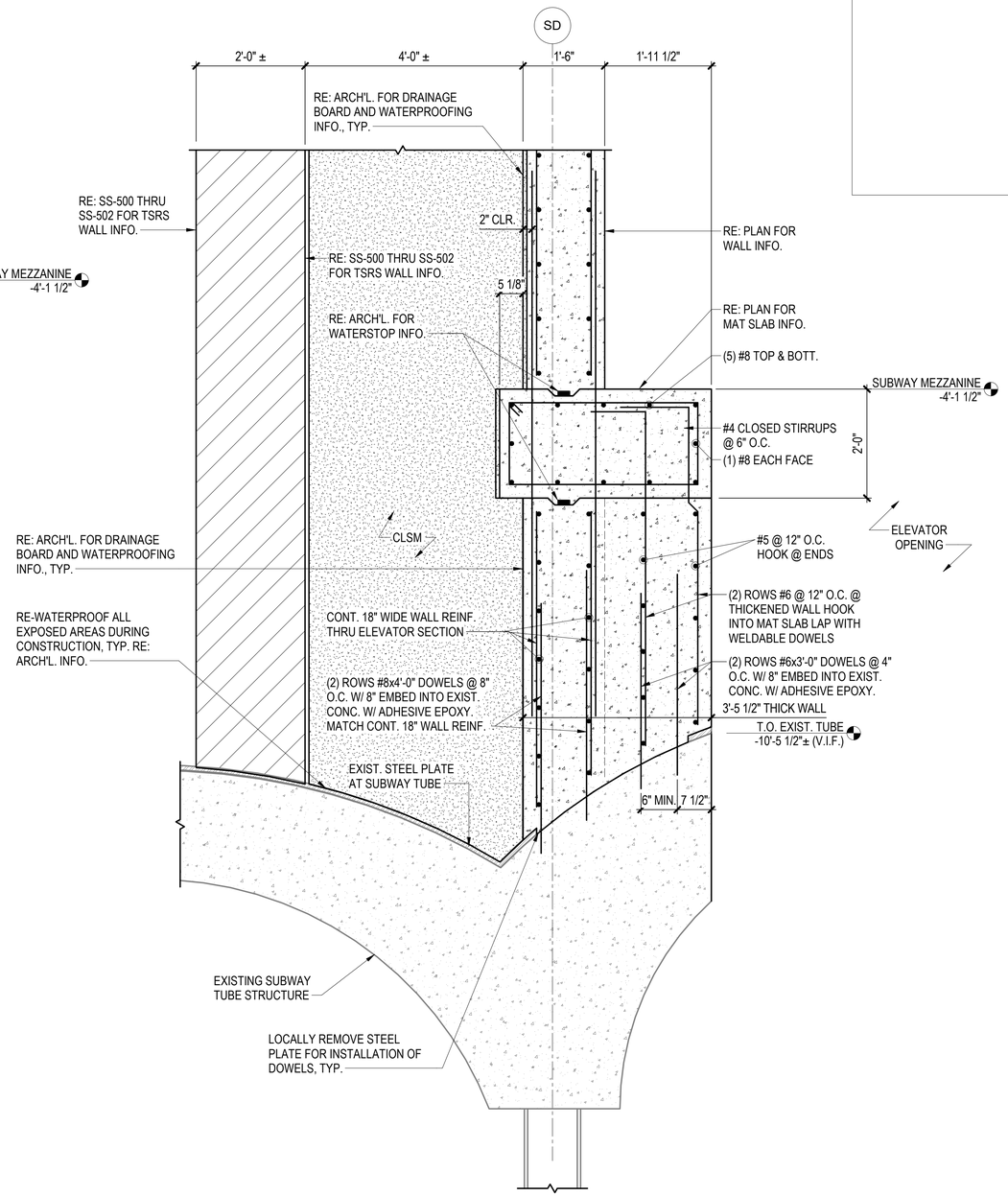

3 SECTION
3/4" = 1'-0"

DESIGN BY:										
DRAWN BY:										
CHECKED BY:		4	7/03/2023	ISSUED FOR BID						
APPROVED BY:		1	11/04/2022	ISSUED FOR PERMIT REVISION 1						
CDOT/APPROVED BY:		0	9/9/2022	ISSUED FOR PERMIT	MMB	MDG	MJT			
		NO.	DATE	REVISIONS	DES.	DRW.	CHK.	DCCO	CDOT	

TRANSYSTEMS
222 SOUTH RIVERSIDE PLAZA SUITE 610
CHICAGO, ILLINOIS 60606

SKIDMORE, OWINGS & MERRILL LLP
224 SOUTH MICHIGAN AVENUE, SUITE 1000
CHICAGO, ILLINOIS 60604

ANNA M. DUKES
062-057866
LICENSED PROFESSIONAL ENGINEER
STATE OF ILLINOIS

CHICAGO DEPARTMENT OF TRANSPORTATION
DIVISION OF ENGINEERING

STATE / LAKE LOOP ELEVATED STATION
200 NORTH STATE STREET, CHICAGO, IL 60601

SPEC. NO.

SECTIONS AND DETAILS

DRAWING NO.
SS-305

CDOT PROJECT D-1-209

DATE: 9/9/2022

REVISION NO. 4

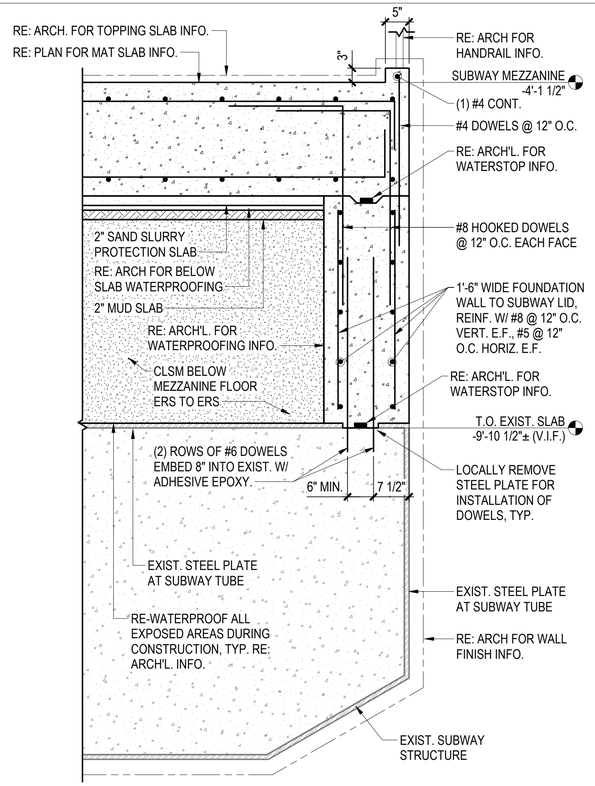

1 SECTION
3/4" = 1'-0"

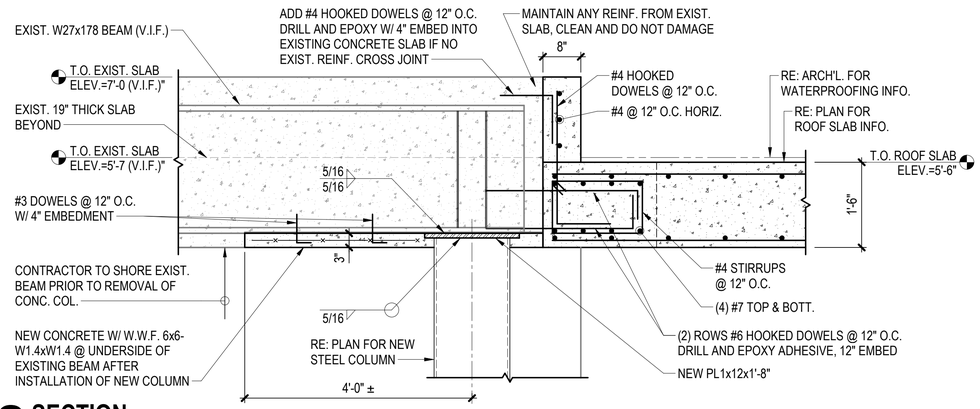

2 SECTION
3/4" = 1'-0"

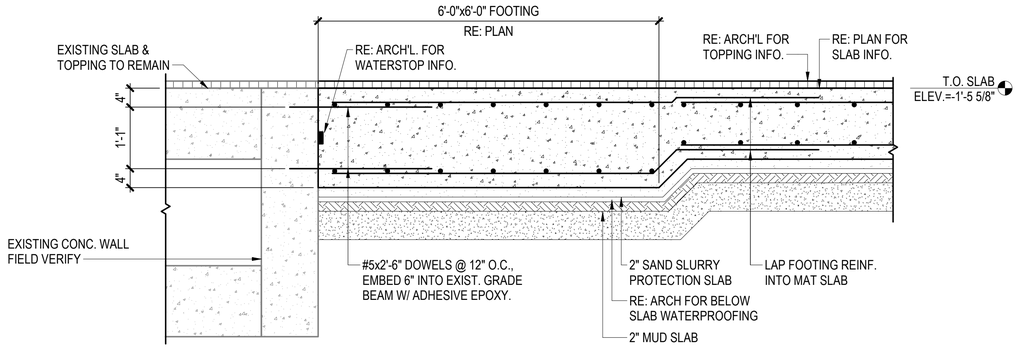

3 SECTION
3/4" = 1'-0"

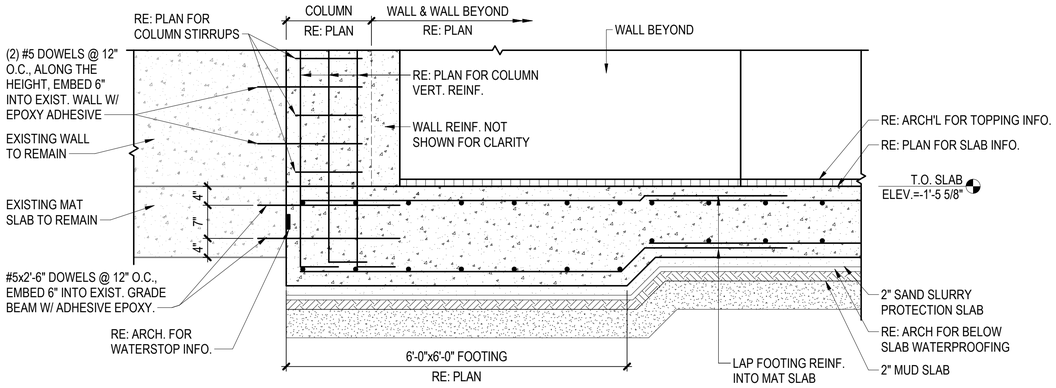

4 SECTION
3/4" = 1'-0"

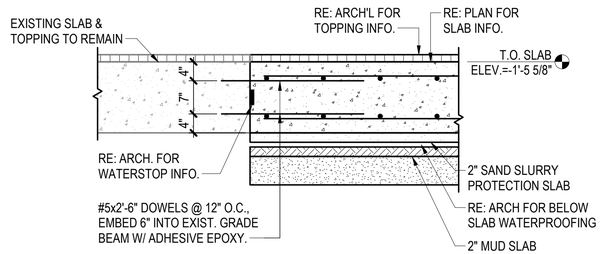

5 SECTION
3/4" = 1'-0"

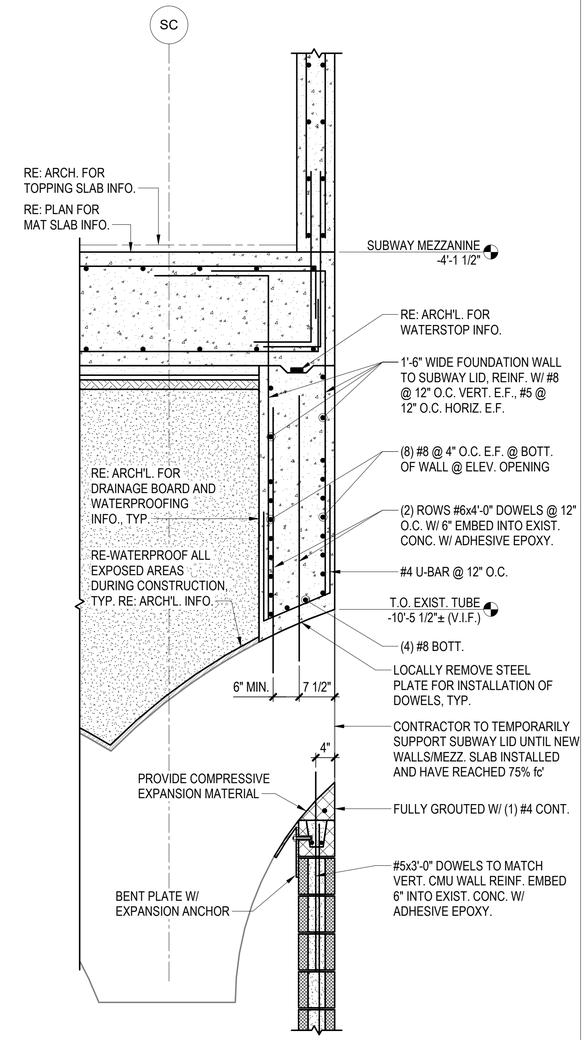

6 SECTION
3/4" = 1'-0"

DESIGN BY:										
DRAWN BY:										
CHECKED BY:		4	7/03/2023	ISSUED FOR BID						
APPROVED BY:		1	11/04/2022	ISSUED FOR PERMIT REVISION 1						
CDOT/APPROVED BY:		0	9/9/2022	ISSUED FOR PERMIT	MMB	MDG	MJT			
		NO.	DATE	REVISIONS	DES.	DRW.	CHK.	DCCO	CDOT	

TRANSYSTEMS
222 SOUTH RIVERSIDE PLAZA SUITE 610
CHICAGO, ILLINOIS 60606

SKIDMORE, OWINGS & MERRILL LLP
224 SOUTH MICHIGAN AVENUE, SUITE 1000
CHICAGO, ILLINOIS 60604

ANNA M. DUKES
062-057866
LICENSED PROFESSIONAL ENGINEER
STATE OF ILLINOIS

CHICAGO DEPARTMENT OF TRANSPORTATION
DIVISION OF ENGINEERING

STATE / LAKE LOOP ELEVATED STATION
200 NORTH STATE STREET, CHICAGO, IL 60601

SPEC. NO.

SECTIONS AND DETAILS

DRAWING NO.
SS-306

CDOT PROJECT D-1-209

DATE: 9/9/2022

REVISION NO.4

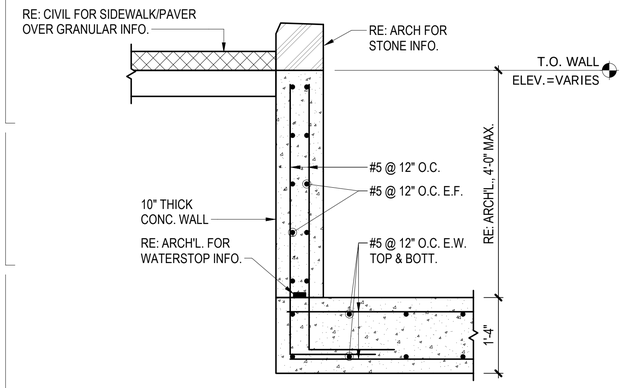

1 SECTION
3/4" = 1'-0"

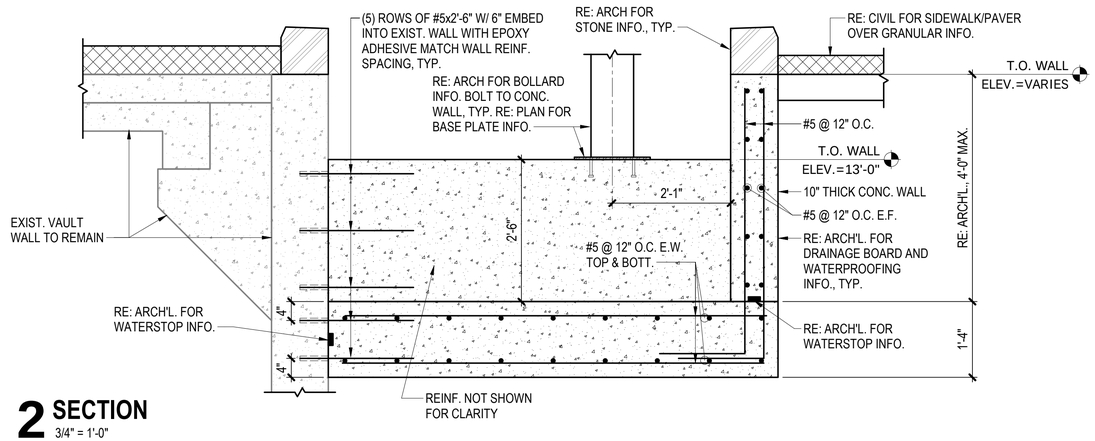

2 SECTION
3/4" = 1'-0"

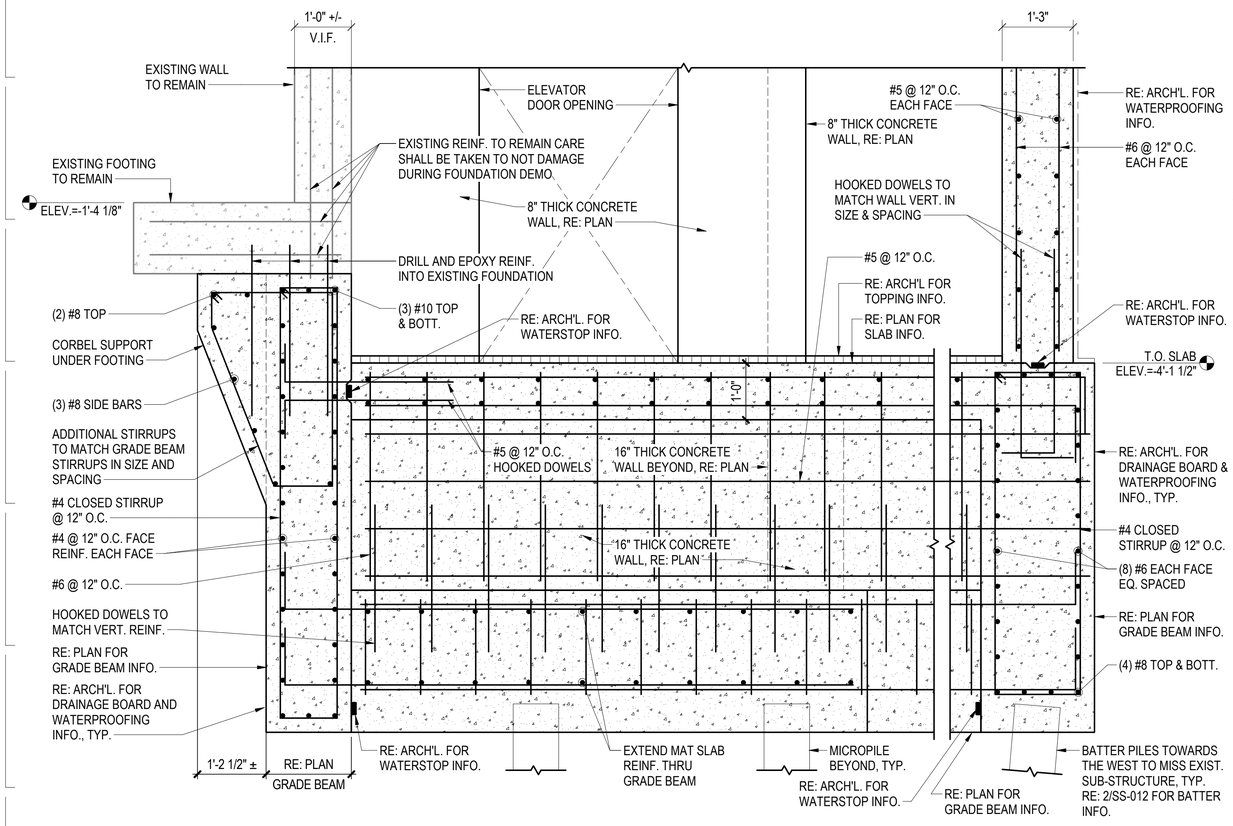

3 SECTION
3/4" = 1'-0"

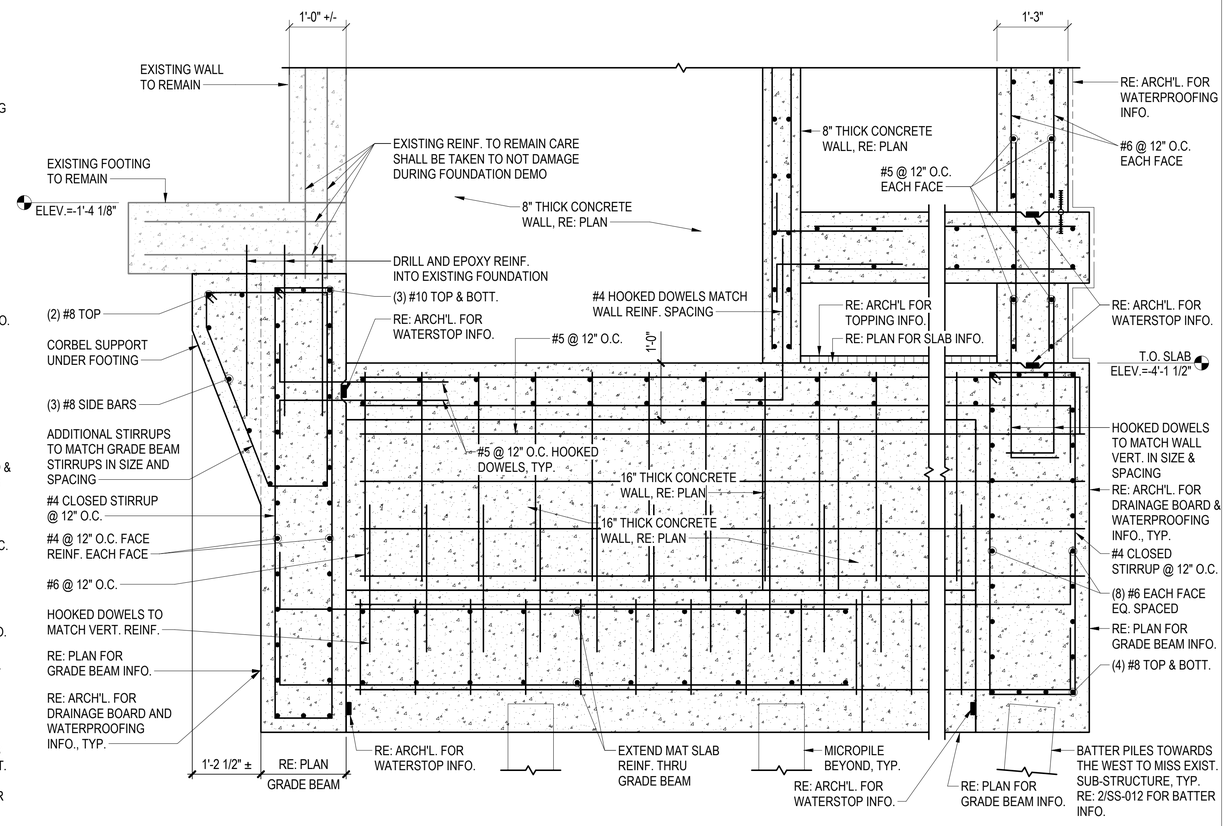

4 SECTION
3/4" = 1'-0"

DESIGN BY:									
DRAWN BY:									
CHECKED BY:		4	7/03/2023	ISSUED FOR BID					
		1	11/04/2022	ISSUED FOR PERMIT REVISION 1					
APPROVED BY:		0	9/9/2022	ISSUED FOR PERMIT	MMB	MDG	MJT		
CDOT/APPROVED BY:		NO.	DATE	REVISIONS	DES.	DRW.	CHK.	DCCO	CDOT

TRANSYSTEMS
222 SOUTH RIVERSIDE PLAZA SUITE 610
CHICAGO, ILLINOIS 60606

SKIDMORE, OWINGS & MERRILL LLP
224 SOUTH MICHIGAN AVENUE, SUITE 1000
CHICAGO, ILLINOIS 60604

ANNA M. DUKE 062-057286 LICENSED PROFESSIONAL ENGINEER STATE OF ILLINOIS

CHICAGO DEPARTMENT OF TRANSPORTATION
DIVISION OF ENGINEERING

STATE / LAKE LOOP ELEVATED STATION
200 NORTH STATE STREET, CHICAGO, IL 60601

SECTIONS AND DETAILS

CDOT PROJECT D-1-209

DATE: 9/9/2022

SPEC. NO.

DRAWING NO. SS-307

REVISION NO.4

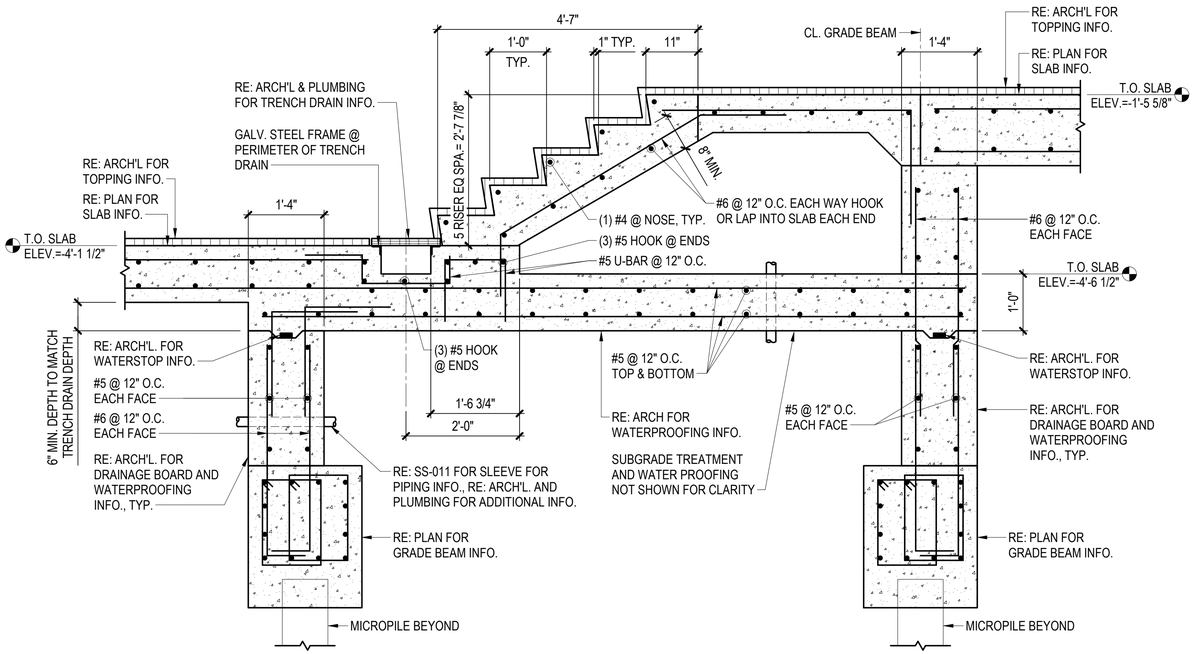

1 SECTION
3/4" = 1'-0"

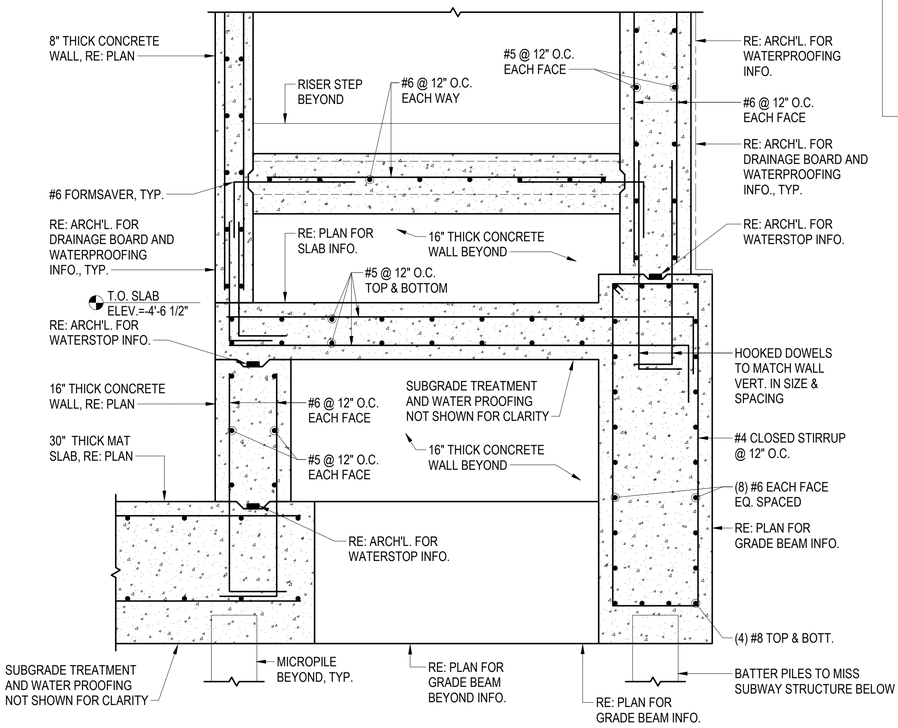

2 SECTION
3/4" = 1'-0"

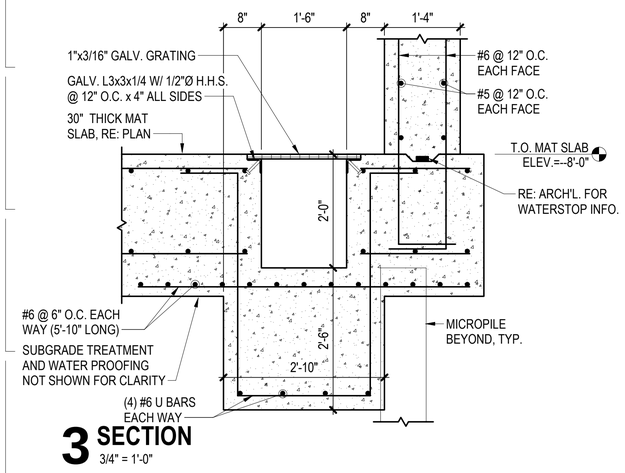

3 SECTION
3/4" = 1'-0"

NO.	DATE	REVISIONS	DES.	DRW.	CHK.	DCCO	CDOT
4	7/03/2023	ISSUED FOR BID					
1	11/04/2022	ISSUED FOR PERMIT REVISION 1					
0	9/9/2022	ISSUED FOR PERMIT	MMB	MDG	MJT		

DESIGN BY:
DRAWN BY:
CHECKED BY:
APPROVED BY:
CDOT/APPROVED BY:

TRANSYSTEMS
222 SOUTH RIVERSIDE PLAZA SUITE 610
CHICAGO, ILLINOIS 60606

SKIDMORE, OWINGS & MERRILL LLP
224 SOUTH MICHIGAN AVENUE, SUITE 1000
CHICAGO, ILLINOIS 60604

ANNA M. DUKES 062-057866 LICENSED PROFESSIONAL ENGINEER STATE OF ILLINOIS

CHICAGO DEPARTMENT OF TRANSPORTATION
DIVISION OF ENGINEERING

STATE / LAKE LOOP ELEVATED STATION
200 NORTH STATE STREET, CHICAGO, IL 60601

SECTIONS AND DETAILS

CDOT PROJECT D-1-209

DATE: 9/9/2022

SPEC. NO.

DRAWING NO. SS-308

REVISION NO.4

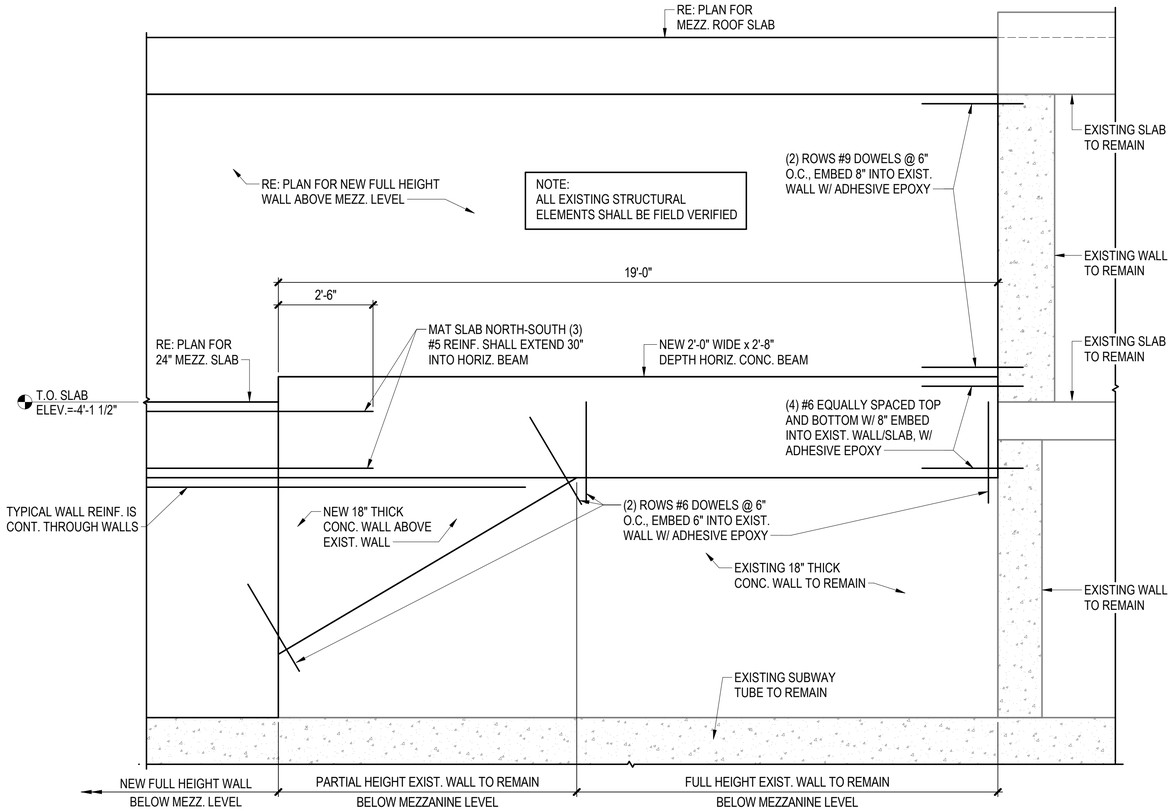

1 SECTION
1/2" = 1'-0"

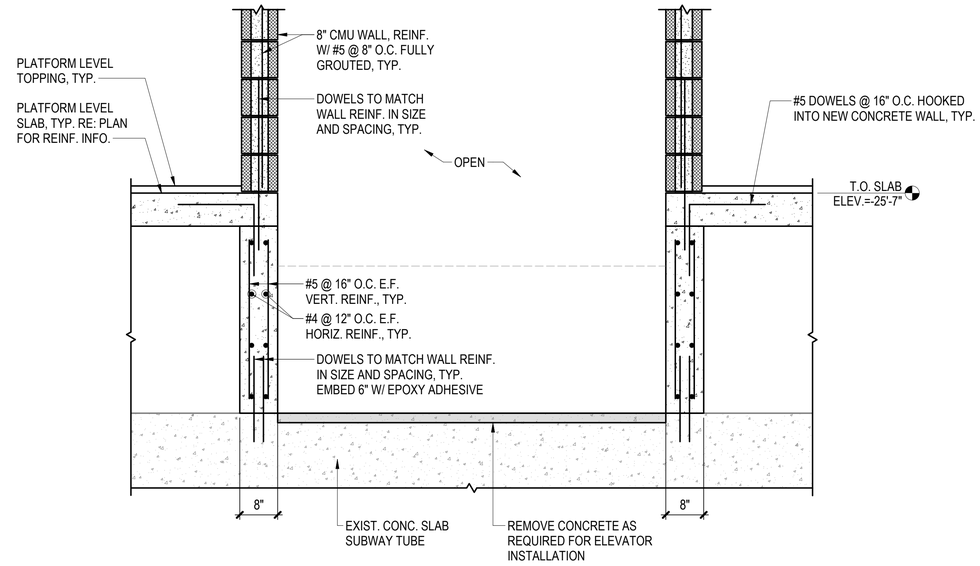

2 SECTION
3/4" = 1'-0"

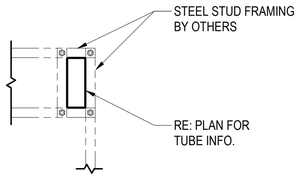

NOTES:
1. REFER TO 1 & 2 ON SHEET AS-514 FOR ADDITIONAL INFO.

3 SECTION LIGHT TRAY SUPPORT
1" = 1'-0"

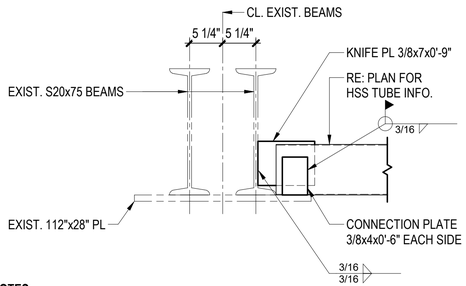

NOTES:
1. CONTRACTOR SHALL VERIFY ALL INFO IN FIELD BEFORE FABRICATION.

4 SECTION LIGHT TRAY SUPPORT
1" = 1'-0"

DESIGN BY:										
DRAWN BY:										
CHECKED BY:		4	7/03/2023	ISSUED FOR BID						
APPROVED BY:		1	11/04/2022	ISSUED FOR PERMIT REVISION 1						
CDOT/APPROVED BY:		0	9/9/2022	ISSUED FOR PERMIT	MMB	MDG	MJT			
		NO.	DATE	REVISIONS	DES.	DRW.	CHK.	DCCO	CDOT	

TRANSYSTEMS
222 SOUTH RIVERSIDE PLAZA SUITE 610
CHICAGO, ILLINOIS 60606

SKIDMORE, OWINGS & MERRILL LLP
224 SOUTH MICHIGAN AVENUE, SUITE 1000
CHICAGO, ILLINOIS 60604

STATE OF ILLINOIS
ANNA M. DUKE
062-057866
LICENSED PROFESSIONAL ENGINEER

CHICAGO DEPARTMENT
OF TRANSPORTATION
DIVISION OF ENGINEERING

STATE / LAKE LOOP ELEVATED STATION
200 NORTH STATE STREET, CHICAGO, IL 60601

SECTIONS AND DETAILS

CDOT PROJECT D-1-209

DATE: 9/9/2022

SPEC. NO.

DRAWING NO.
SS-309

REVISION NO.4

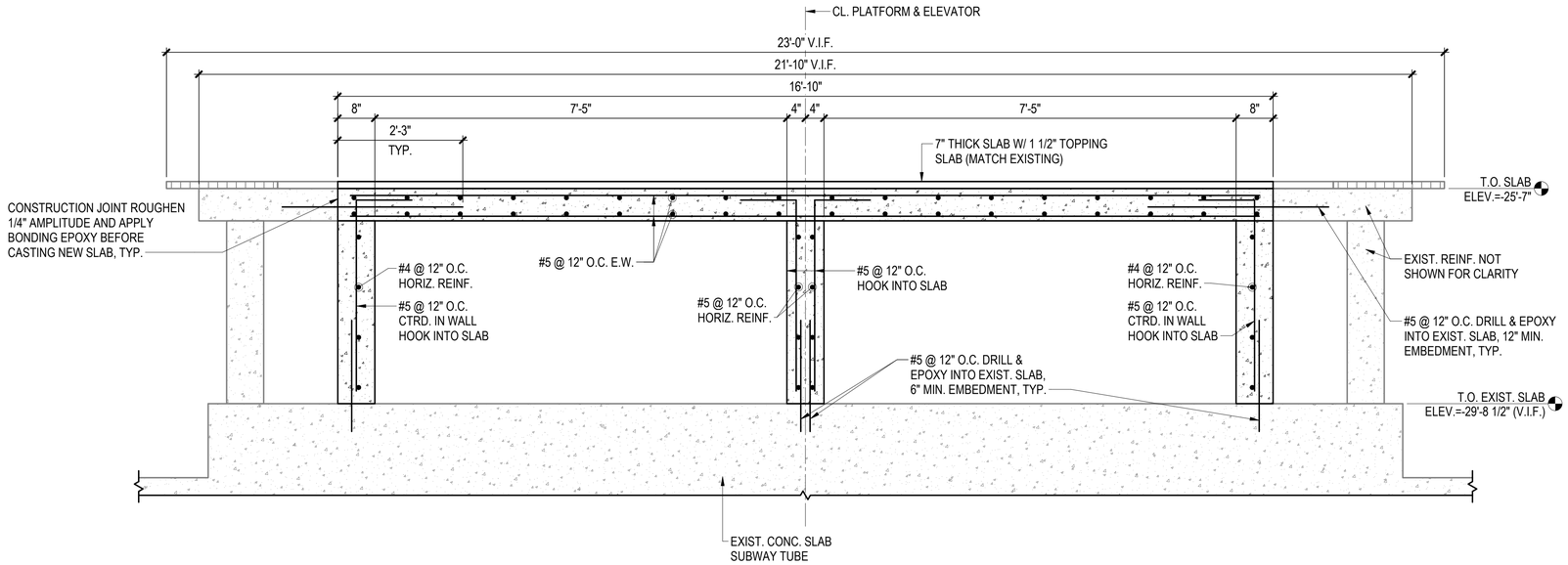

NOTES:
1. CONTRACTOR SHALL SHORE THE EXISTING SLAB BEFORE NEW SLAB IS CAST.

1 SECTION
3/4" = 1'-0"

NO.	DATE	REVISIONS	DES.	DRW.	CHK.	DCCO	CDOT
4	7/03/2023	ISSUED FOR BID					
1	11/04/2022	ISSUED FOR PERMIT REVISION 1					
0	9/9/2022	ISSUED FOR PERMIT	MMB	MDG	MJT		

DESIGN BY:
DRAWN BY:
CHECKED BY:
APPROVED BY:
CDOT/APPROVED BY:

TRANSYSTEMS
222 SOUTH RIVERSIDE PLAZA SUITE 610
CHICAGO, ILLINOIS 60606

SKIDMORE, OWINGS & MERRILL LLP
224 SOUTH MICHIGAN AVENUE, SUITE 1000
CHICAGO, ILLINOIS 60604

STATE OF ILLINOIS — ANNA M. DUKES — 062-019490 — LICENSED PROFESSIONAL ENGINEER

CHICAGO DEPARTMENT OF TRANSPORTATION
DIVISION OF ENGINEERING

STATE / LAKE LOOP ELEVATED STATION
200 NORTH STATE STREET, CHICAGO, IL 60601

SECTIONS AND DETAILS

CDOT PROJECT D-1-209

DATE: 9/9/2022

SPEC. NO.

DRAWING NO. SS-310

REVISION NO.4

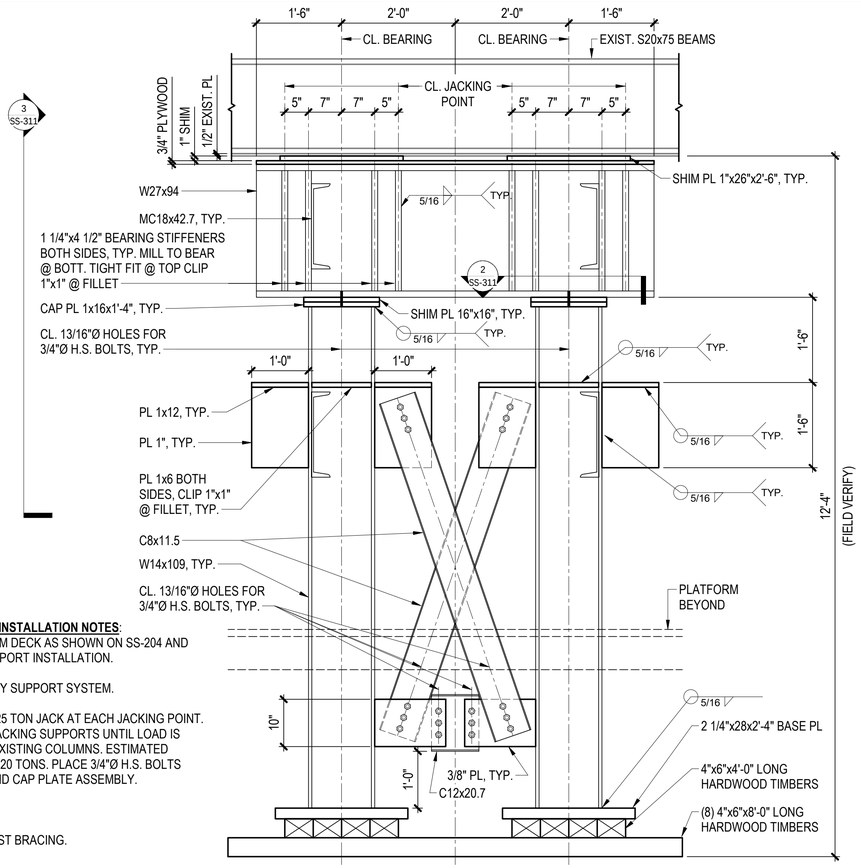

TEMPORARY SUPPORT INSTALLATION NOTES:

1. REMOVE PLATFORM DECK AS SHOWN ON SS-204 AND REQUIRED TO SUPPORT INSTALLATION.
2. ERECT TEMPORARY SUPPORT SYSTEM.
3. PLACE MINIMUM 125 TON JACK AT EACH JACKING POINT. JACK W27 FROM JACKING SUPPORTS UNTIL LOAD IS REMOVED FROM EXISTING COLUMNS. ESTIMATED JACKING LOAD IS 120 TONS. PLACE 3/4"Ø H.S. BOLTS THROUGH SHIM AND CAP PLATE ASSEMBLY.
4. REMOVE JACK.
5. REMOVE EAST/WEST BRACING.

1 SECTION SUGGESTED SHORING
3/4" = 1'-0"

SHORING NOTES:

1. THESE DRAWINGS SHOW A SUGGESTED CONCEPT AND ASSOCIATED MINIMUM SIZES, DESIGN OF SHORING SYSTEM SHALL BE DONE BY CONTRACTOR'S ENGINEER. SEALED PLANS AND CALCULATIONS SHALL BE SUBMITTED TO THE COMMISSIONER FOR APPROVAL BY AN ILLINOIS LICENSED STRUCTURAL ENGINEER PRIOR TO INSTALLATION OF ANY TEMPORARY SHORING. SHORING IS NOT IN CONTRACT AND SHALL BE A DELEGATED DESIGN AND THE CONTRACTOR SHALL PROVIDE THE PERMITTING FOR THIS DELEGATED DESIGN IN FINAL CONTRACT. THIS SHEET ALL DETAILS ARE FOR REFERENCE ONLY.
2. IT IS THE CONTRACTOR'S RESPONSIBILITY TO MAINTAIN STABILITY OF THE STRUCTURE AT ALL TIMES.
3. THE CONTRACTOR SHALL FULLY FAMILIARIZE THEIRSELF WITH ALL EXISTING STRUCTURES, SEWER LOCATIONS AND OTHER UTILITIES, SITE CONDITIONS, EXISTING BUILDING DRAWINGS, SURVEYS AND REPORTS. THE CONTRACTOR SHALL FIELD VERIFY ALL DIMENSIONS AND CONDITIONS SHOWN OR DESCRIBED TO BE EXISTING BY THEIR OWN FIELD SURVEY PRIOR TO THE START OF SHOP DRAWING PREPARATION, FABRICATION, OR SITE CONSTRUCTION. SUCH FIELD SURVEY DETERMINATION UTILIZING TEST PITS TO DETERMINE THE VERTICAL AND HORIZONTAL DIMENSIONAL LOCATIONS OF ALL POTENTIALLY AFFECTED UTILITIES. NOTIFY THE COMMISSIONER OF DISCREPANCIES IN WRITING BEFORE PROCEEDING WITH THE WORK.
4. DETERMINING THE ADEQUACY OF THE PROPOSED STRUCTURE TO RESIST JACKING FORCES, CONSTRUCTION CONDITIONS, AND ANY OTHER LOADS WHILE IN A STATE DIFFERENT THAN THAT OF THE STRUCTURE AS SHOWN ON THE FINAL PLANS, SHALL BE THE RESPONSIBILITY OF THE CONTRACTOR, AND SHALL BE EVALUATED BY AN ILLINOIS LICENSED STRUCTURAL ENGINEER.
5. ANY MODIFICATIONS TO THE PROPOSED STRUCTURE AS SHOWN ON THE FINAL PLANS TO FACILITATE CONSTRUCTION, MUST BE APPROVED BY THE COMMISSIONER, EVALUATED BY, AND SEALED BY A LICENSED STRUCTURAL ENGINEER IN THE STATE OF ILLINOIS PRIOR TO THE START OF CONSTRUCTION. THIS WORK WILL BE CONSIDERED AS INCLUDED IN THE COST OF THE CONTRACT.

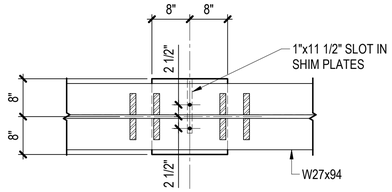

2 SECTION
3/4" = 1'-0"

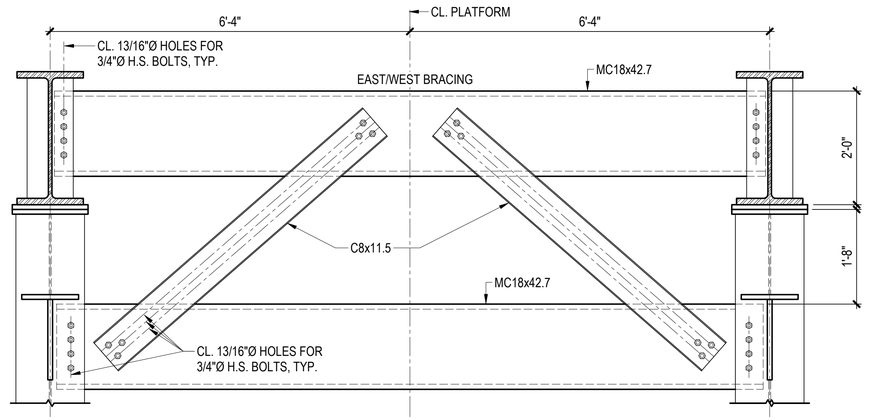

3 SECTION
3/4" = 1'-0"

THIS DRAWING IS FOR REFERENCE ONLY (DELEGATED DESIGN)

NO.	DATE	REVISIONS	DES.	DRW.	CHK.	DCCO	CDOT
4	7/03/2023	ISSUED FOR BID	MMB	MDG	MJT		
2	1/13/2023	ISSUED FOR PERMIT REVISION 2					
1	11/04/2022	ISSUED FOR PERMIT REVISION 1					
0	9/9/2022	ISSUED FOR PERMIT					

DESIGN BY:
DRAWN BY:
CHECKED BY:
APPROVED BY:
CDOT/APPROVED BY:

TRANSYSTEMS
222 SOUTH RIVERSIDE PLAZA SUITE 610
CHICAGO, ILLINOIS 60606

SKIDMORE, OWINGS & MERRILL LLP
224 SOUTH MICHIGAN AVENUE, SUITE 1000
CHICAGO, ILLINOIS 60604

ANNA M. DUKES
062-057866
LICENSED PROFESSIONAL ENGINEER
STATE OF ILLINOIS

CHICAGO DEPARTMENT OF TRANSPORTATION
DIVISION OF ENGINEERING

STATE / LAKE LOOP ELEVATED STATION
200 NORTH STATE STREET, CHICAGO, IL 60601

SECTIONS AND DETAILS

SPEC. NO.

DRAWING NO.
SS-311

CDOT PROJECT D-1-209

DATE: 9/9/2022

REVISION NO.4

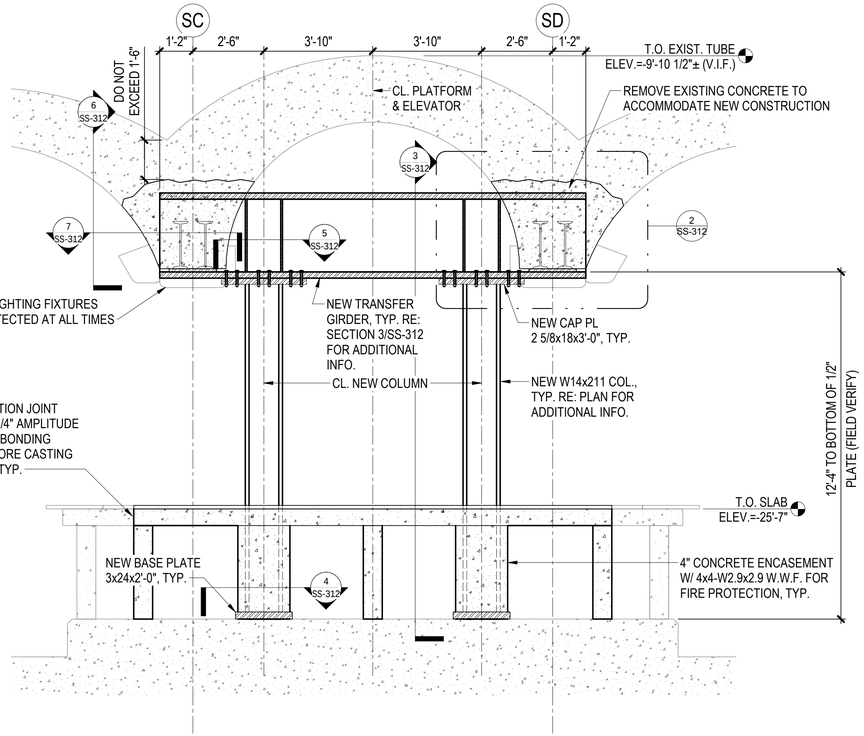

1 SECTION
3/8" = 1'-0"

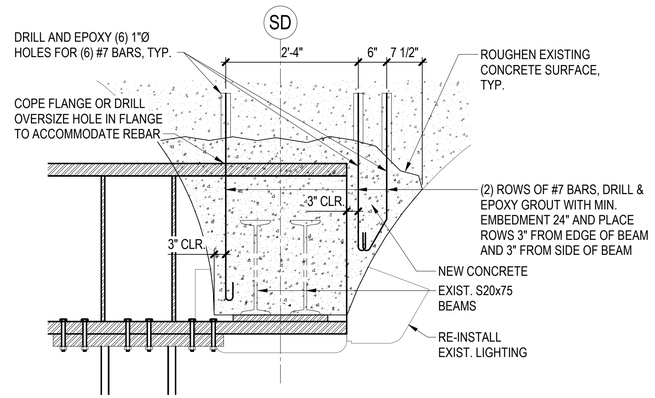

2 DETAIL
3/4" = 1'-0"

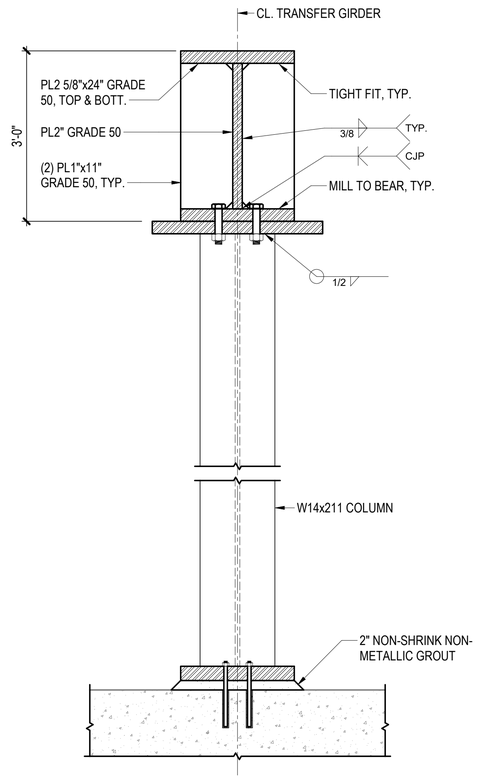

3 SECTION
3/4" = 1'-0"

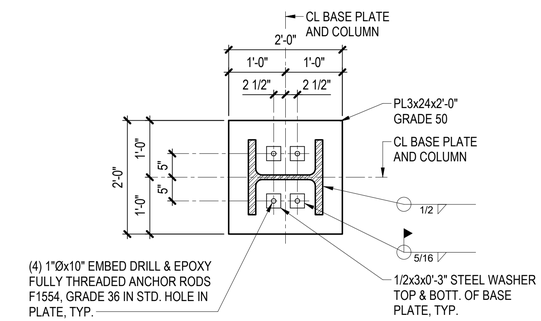

4 SECTION
3/4" = 1'-0"

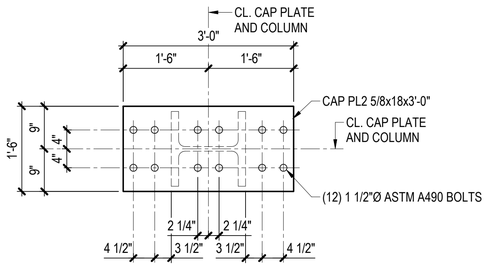

5 SECTION
3/4" = 1'-0"

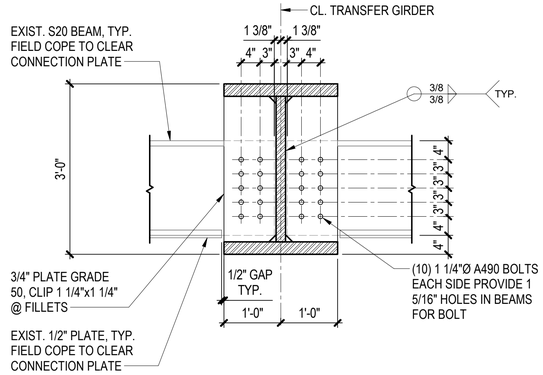

6 SECTION
3/4" = 1'-0"

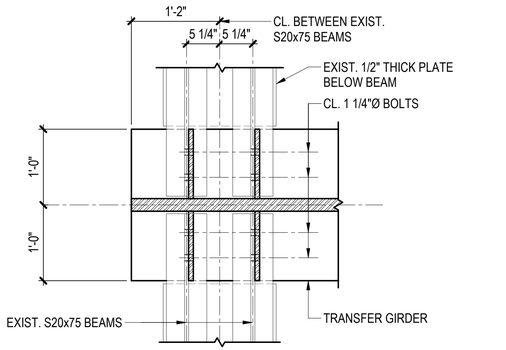

7 SECTION
1" = 1'-0"

DESIGN BY:										
DRAWN BY:										
CHECKED BY:		4	7/03/2023	ISSUED FOR BID						
APPROVED BY:		1	11/04/2022	ISSUED FOR PERMIT REVISION 1						
CDOT/APPROVED BY:		0	9/9/2022	ISSUED FOR PERMIT	MMB	MDG	MJT			
		NO.	DATE	REVISIONS	DES.	DRW.	CHK.	DCCO	CDOT	

TRANSYSTEMS
222 SOUTH RIVERSIDE PLAZA SUITE 610
CHICAGO, ILLINOIS 60606

SKIDMORE, OWINGS & MERRILL LLP
224 SOUTH MICHIGAN AVENUE, SUITE 1000
CHICAGO, ILLINOIS 60604

STATE OF ILLINOIS — ANNA M. NUKES — 062-059866 — LICENSED PROFESSIONAL ENGINEER

CHICAGO DEPARTMENT OF TRANSPORTATION
DIVISION OF ENGINEERING

STATE / LAKE LOOP ELEVATED STATION
200 NORTH STATE STREET, CHICAGO, IL 60601

SECTIONS AND DETAILS

CDOT PROJECT D-1-209 | DATE: 9/9/2022

SPEC. NO.

DRAWING NO. SS-312

REVISION NO.4

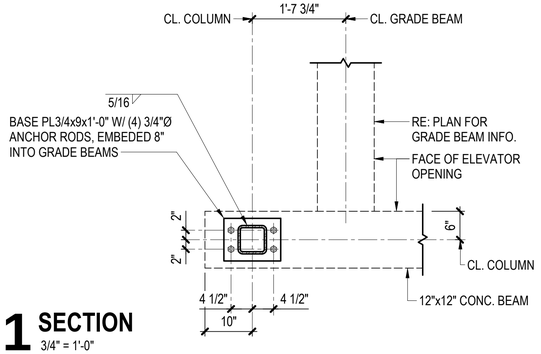

1 SECTION
3/4" = 1'-0"

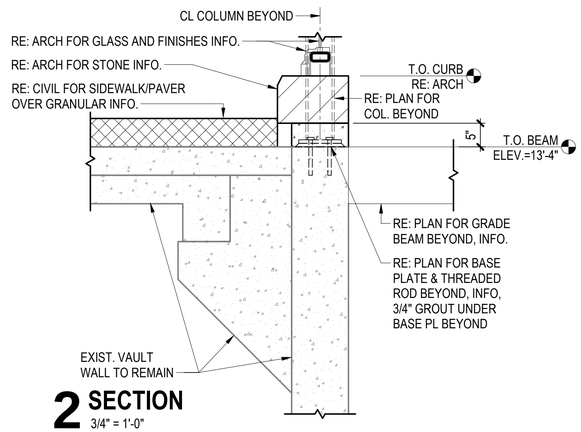

2 SECTION
3/4" = 1'-0"

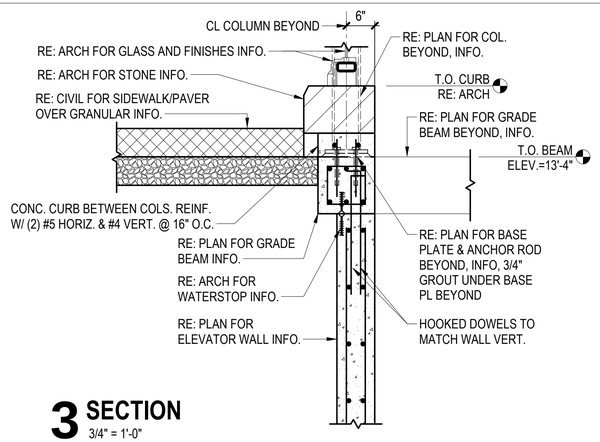

3 SECTION
3/4" = 1'-0"

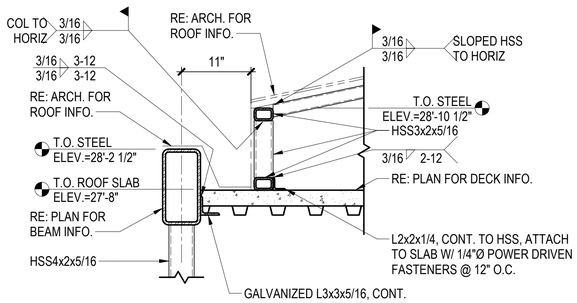

4 SECTION
1" = 1'-0"

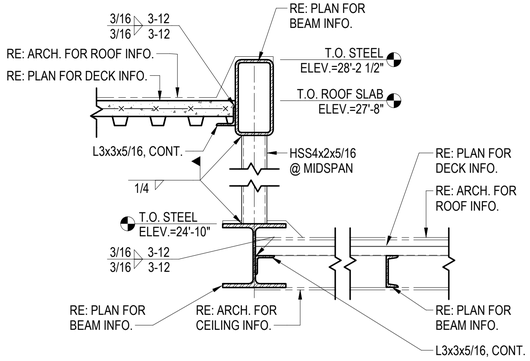

5 SECTION
1" = 1'-0"

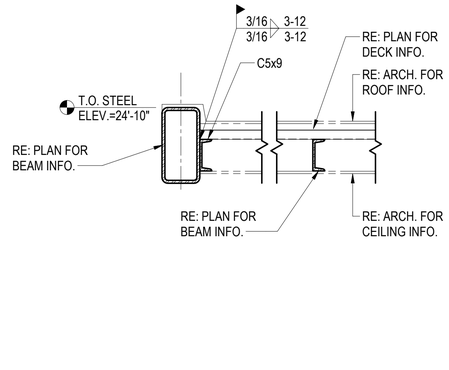

6 SECTION
1" = 1'-0"

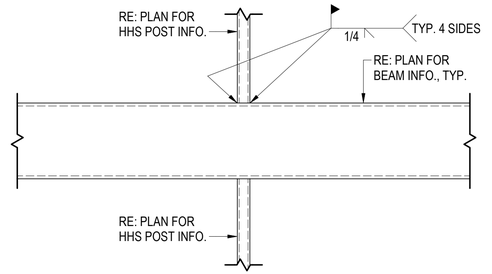

7 SECTION
1" = 1'-0"

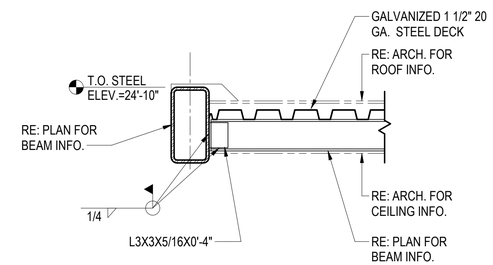

8 SECTION
1" = 1'-0"

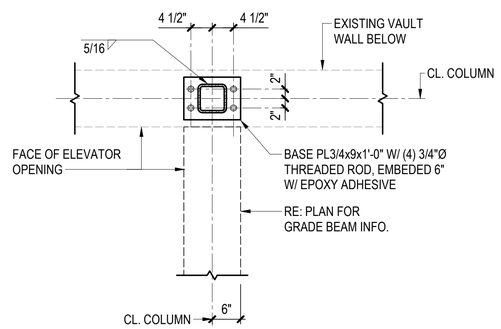

9 SECTION
3/4" = 1'-0"

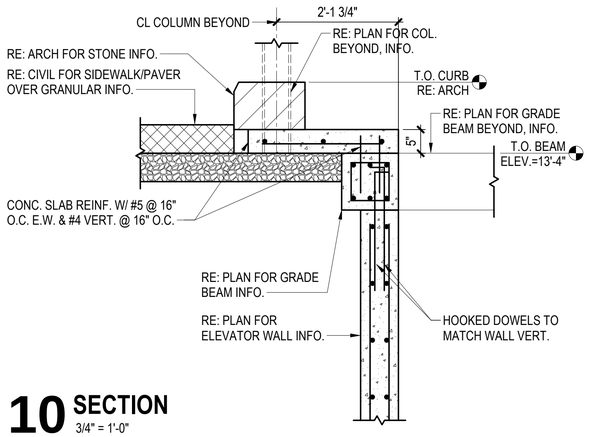

10 SECTION
3/4" = 1'-0"

NO.	DATE	REVISIONS	DES.	DRW.	CHK.	DCCO	CDOT
4	7/03/2023	ISSUED FOR BID					
1	11/04/2022	ISSUED FOR PERMIT REVISION 1					
0	9/9/2022	ISSUED FOR PERMIT	MMB	MDG	MJT		

DESIGN BY:
DRAWN BY:
CHECKED BY:
APPROVED BY:
CDOT/APPROVED BY:

TRANSYSTEMS
222 SOUTH RIVERSIDE PLAZA SUITE 610
CHICAGO, ILLINOIS 60606

SKIDMORE, OWINGS & MERRILL LLP
224 SOUTH MICHIGAN AVENUE, SUITE 1000
CHICAGO, ILLINOIS 60604

ANNA M. NUKES
062-039866
REGISTERED PROFESSIONAL ENGINEER
STATE OF ILLINOIS

CHICAGO DEPARTMENT OF TRANSPORTATION
DIVISION OF ENGINEERING

STATE / LAKE LOOP ELEVATED STATION
200 NORTH STATE STREET, CHICAGO, IL 60601

SECTIONS AND DETAILS

CDOT PROJECT D-1-209

DATE: 9/9/2022

SPEC. NO.

DRAWING NO. SS-400

REVISION NO.4

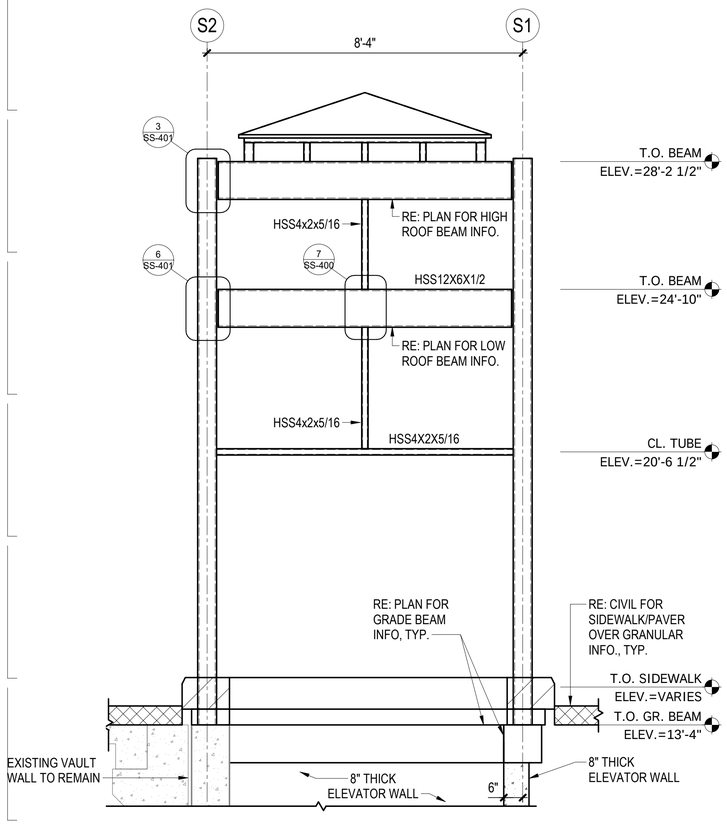

1 SOUTH ELEVATION
1/2" = 1'-0"

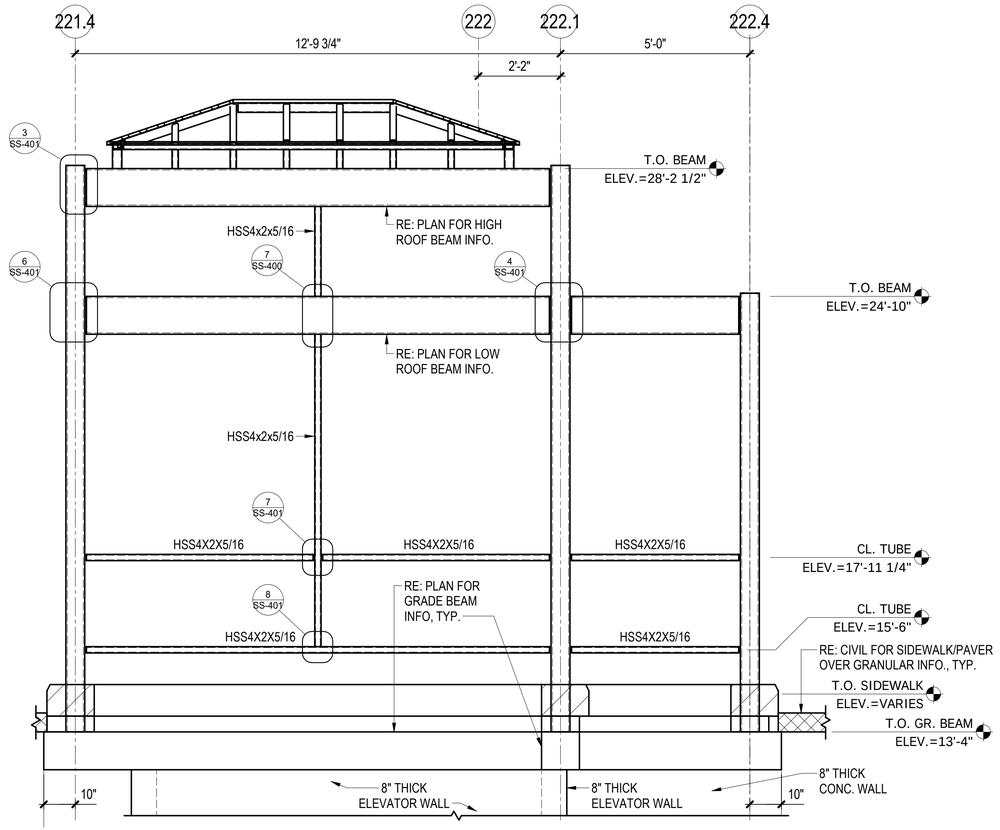

2 EAST ELEVATION
1/2" = 1'-0"

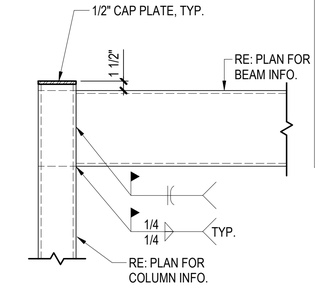

3 SECTION
1" = 1'-0"

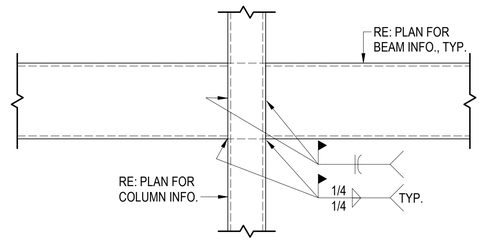

4 SECTION
1" = 1'-0"

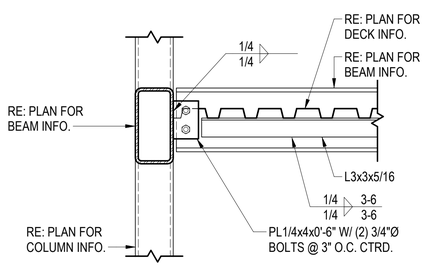

5 SECTION
1" = 1'-0"

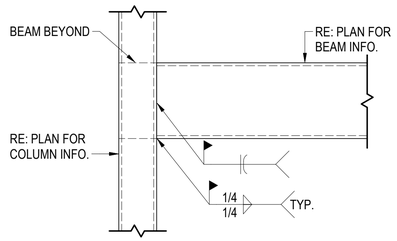

6 SECTION
1" = 1'-0"

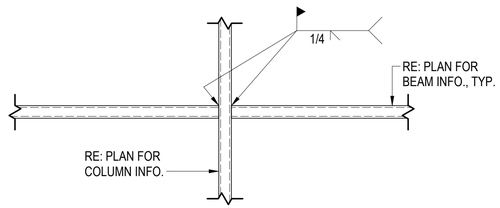

7 SECTION
1" = 1'-0"

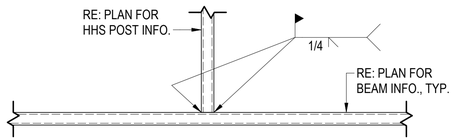

8 SECTION
1" = 1'-0"

DESIGN BY:										
DRAWN BY:										
CHECKED BY:		4	7/03/2023	ISSUED FOR BID						
APPROVED BY:		1	11/04/2022	ISSUED FOR PERMIT REVISION 1						
CDOT/APPROVED BY:		0	9/9/2022	ISSUED FOR PERMIT	MMB	MDG	MJT			
		NO.	DATE	REVISIONS	DES.	DRW.	CHK.	DCCO	CDOT	

TRANSYSTEMS
222 SOUTH RIVERSIDE PLAZA SUITE 610
CHICAGO, ILLINOIS 60606

SKIDMORE, OWINGS & MERRILL LLP
224 SOUTH MICHIGAN AVENUE, SUITE 1000
CHICAGO, ILLINOIS 60604

STATE OF ILLINOIS — ANNA M. NUKES — 062-039866 — LICENSED PROFESSIONAL ENGINEER

CHICAGO DEPARTMENT OF TRANSPORTATION
DIVISION OF ENGINEERING

STATE / LAKE LOOP ELEVATED STATION
200 NORTH STATE STREET, CHICAGO, IL 60601

SECTIONS AND DETAILS

CDOT PROJECT D-1-209 | DATE: 9/9/2022

SPEC. NO.

DRAWING NO. SS-401

REVISION NO.4

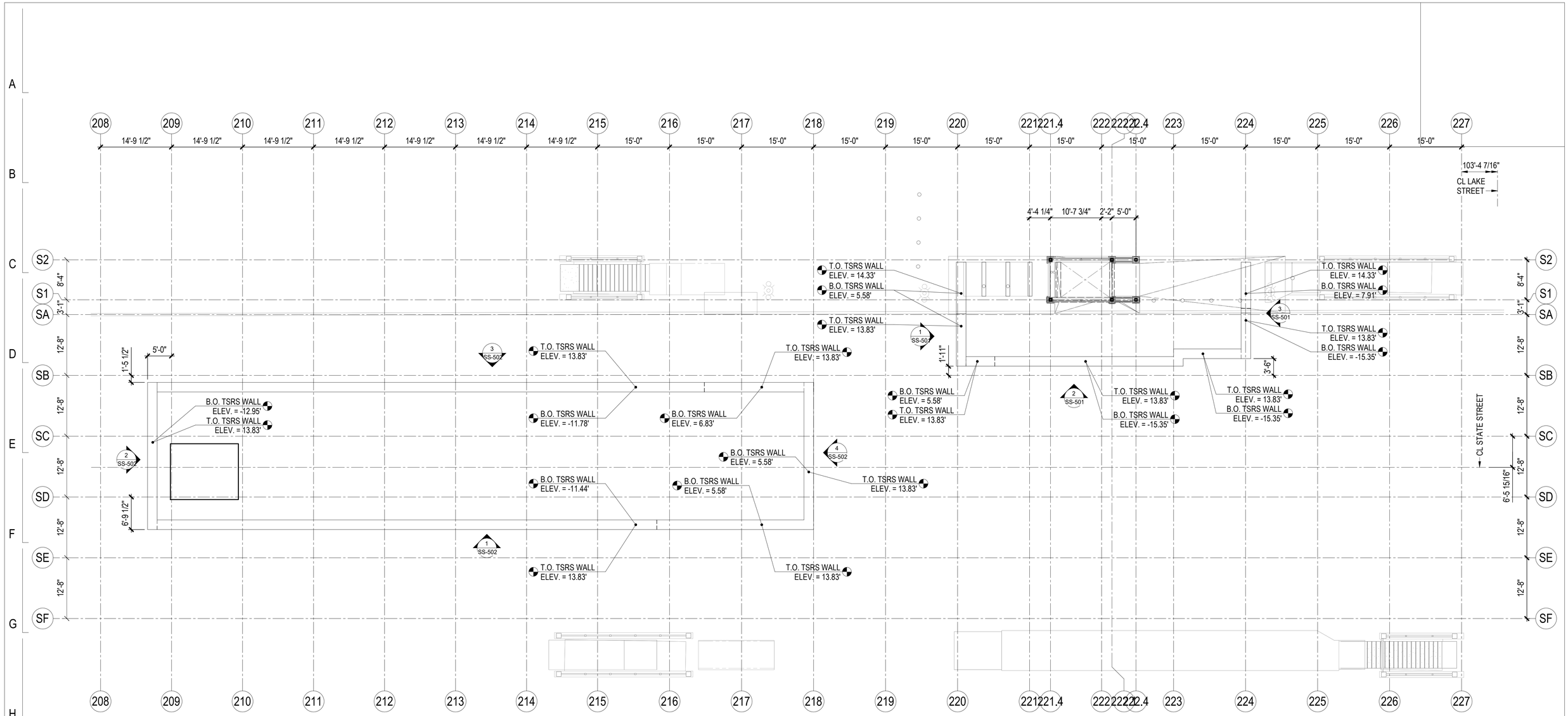

NOTES:

1. CONTRACTOR SHALL ADJUST THE LOCATIONS OF THE TSRS WALL AS REQUIRED BASED ON SITE CONDITIONS AND CONSTRUCTION REQUIREMENTS.
2. CONTRACTOR SHALL PROVIDE COMMISSIONER FINAL LAYOUT OF TSRS WALL FOR REVIEW BEFORE CONSTRUCTION.
3. CONTRACTOR SHALL PROVIDE A SEPARATE FUTURE PERMIT FOR THE DELEGATED TSRS WALL BY A SPECIALTY ENGINEER.
4. THIS SHEET IS FOR REFERENCE ONLY.

1 TEMPORARY SOIL RETENTION SYSTEM (TSRS) - OVERVIEW

1" = 10'-0"

THIS DRAWING IS FOR REFERENCE ONLY (DELEGATED DESIGN)

NO.	DATE	REVISIONS	DES.	DRW.	CHK.	DCCO	CDOT
4	7/03/2023	ISSUED FOR BID					
3	2/03/2023	ISSUED FOR PERMIT REVISION 3					
2	1/13/2023	ISSUED FOR PERMIT REVISION 2					
1	11/04/2022	ISSUED FOR PERMIT REVISION 1					
0	9/9/2022	ISSUED FOR PERMIT	MMB	MDG	MJT		

DESIGN BY:
DRAWN BY:
CHECKED BY:
APPROVED BY:
CDOT/APPROVED BY:

TRANSYSTEMS
222 SOUTH RIVERSIDE PLAZA SUITE 610
CHICAGO, ILLINOIS 60606

SKIDMORE, OWINGS & MERRILL LLP
224 SOUTH MICHIGAN AVENUE, SUITE 1000
CHICAGO, ILLINOIS 60604

ANNA M. DUKES
062-057866
LICENSED PROFESSIONAL ENGINEER
STATE OF ILLINOIS

CHICAGO DEPARTMENT OF TRANSPORTATION
DIVISION OF ENGINEERING

STATE / LAKE LOOP ELEVATED STATION
200 NORTH STATE STREET, CHICAGO, IL 60601

SPEC. NO.

TEMPORARY SOIL RETENTION SYSTEM (TSRS) - OVERVIEW

DRAWING NO.
SS-500

CDOT PROJECT D-1-209

DATE: 9/9/2022

REVISION NO.4

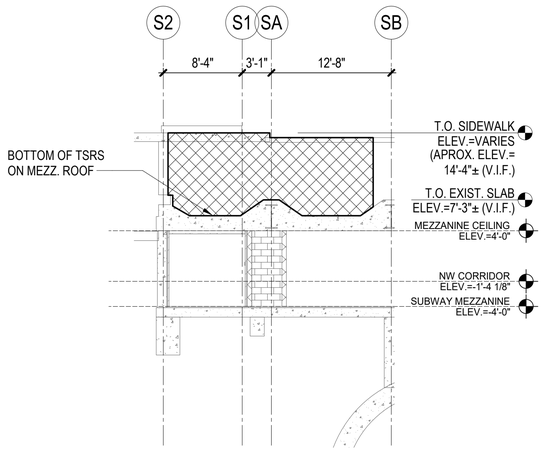

1 NORTH CORRIDOR-TSRS SOUTH WALL
1/8" = 1'-0"

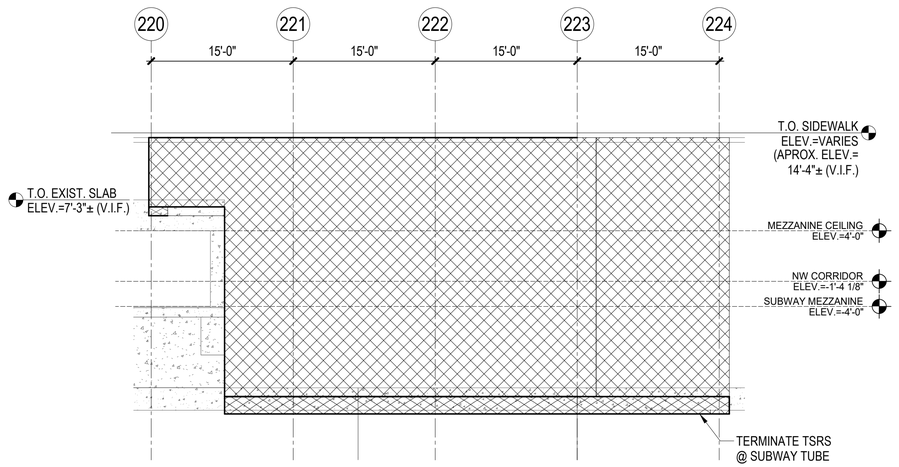

2 NORTH CORRIDOR-TSRS EAST WALL
1/8" = 1'-0"

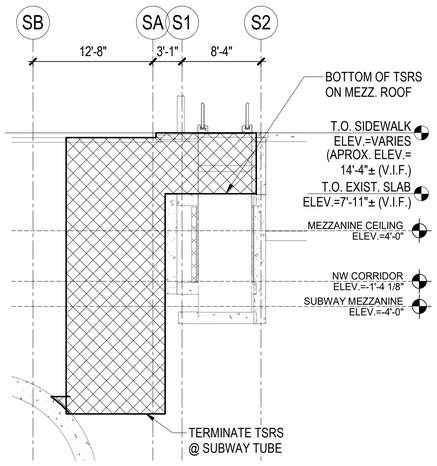

3 NORTH CORRIDOR-TSRS NORTH WALL
1/8" = 1'-0"

NORTH CORRIDOR-TSRS SOUTH WALL:

1. CONTRACTOR SHALL BE CAREFUL NOT TO DAMAGE EXISTING WATER PROOFING OF THE SUBWAY TUBE. IF WATER PROOFING IS DAMAGED, CONTRACTOR SHALL REPAIR WATER PROOFING.
2. CONTRACTOR SHALL PROVIDE A SEPARATE FUTURE PERMIT FOR THE DELEGATED TSRS WALL BY A SPECIALTY ENGINEER.
3. THIS DETAIL IS FOR REFERENCE ONLY.

NORTH CORRIDOR-TSRS EAST WALL:

1. CONTRACTOR SHALL BE CAREFUL NOT TO DAMAGE EXISTING WATER PROOFING OF THE SUBWAY TUBE. IF WATER PROOFING IS DAMAGED, CONTRACTOR SHALL REPAIR WATER PROOFING.
2. CONTRACTOR SHALL COORDINATE WITH COMED FOR FINAL REQUIREMENTS OF EXISTING MANHOLE AND MAKE ACCOMMODATIONS IN THE TSRS WALLS FOR ANY MODIFICATIONS TO THE MANHOLE. REFER TO SHEET C-613 FOR REFERENCE.
3. CONTRACTOR SHALL PROVIDE A SEPARATE FUTURE PERMIT FOR THE DELEGATED TSRS WALL BY A SPECIALTY ENGINEER.
4. THIS DETAIL IS FOR REFERENCE ONLY.

NORTH CORRIDOR-TSRS NORTH WALL:

1. CONTRACTOR SHALL BE CAREFUL NOT TO DAMAGE EXISTING WATER PROOFING OF THE SUBWAY TUBE. IF WATER PROOFING IS DAMAGED, CONTRACTOR SHALL REPAIR WATER PROOFING.
2. CONTRACTOR SHALL PROVIDE A SEPARATE FUTURE PERMIT FOR THE DELEGATED TSRS WALL BY A SPECIALTY ENGINEER.
3. THIS DETAIL IS FOR REFERENCE ONLY.

THIS DRAWING IS FOR REFERENCE ONLY (DELEGATED DESIGN)

NO.	DATE	REVISIONS	DES.	DRW.	CHK.	DCCO	CDOT
4	7/03/2023	ISSUED FOR BID					
2	1/13/2023	ISSUED FOR PERMIT REVISION 2					
1	11/04/2022	ISSUED FOR PERMIT REVISION 1					
0	9/9/2022	ISSUED FOR PERMIT	MMB	MDG	MJT		

DESIGN BY:
DRAWN BY:
CHECKED BY:
APPROVED BY:
CDOT/APPROVED BY:

TRANSYSTEMS
222 SOUTH RIVERSIDE PLAZA SUITE 610
CHICAGO, ILLINOIS 60606

SKIDMORE, OWINGS & MERRILL LLP
224 SOUTH MICHIGAN AVENUE, SUITE 1000
CHICAGO, ILLINOIS 60604

STATE OF ILLINOIS — ANNA M. NUKES — 062-070866 — LICENSED PROFESSIONAL ENGINEER

CHICAGO DEPARTMENT OF TRANSPORTATION
DIVISION OF ENGINEERING

STATE / LAKE LOOP ELEVATED STATION
200 NORTH STATE STREET, CHICAGO, IL 60601

TEMPORARY SOIL RETENTION SYSTEM (TSRS) WALL ELEVATIONS

CDOT PROJECT D-1-209 | DATE: 9/9/2022

SPEC. NO.

DRAWING NO. SS-501

REVISION NO.4

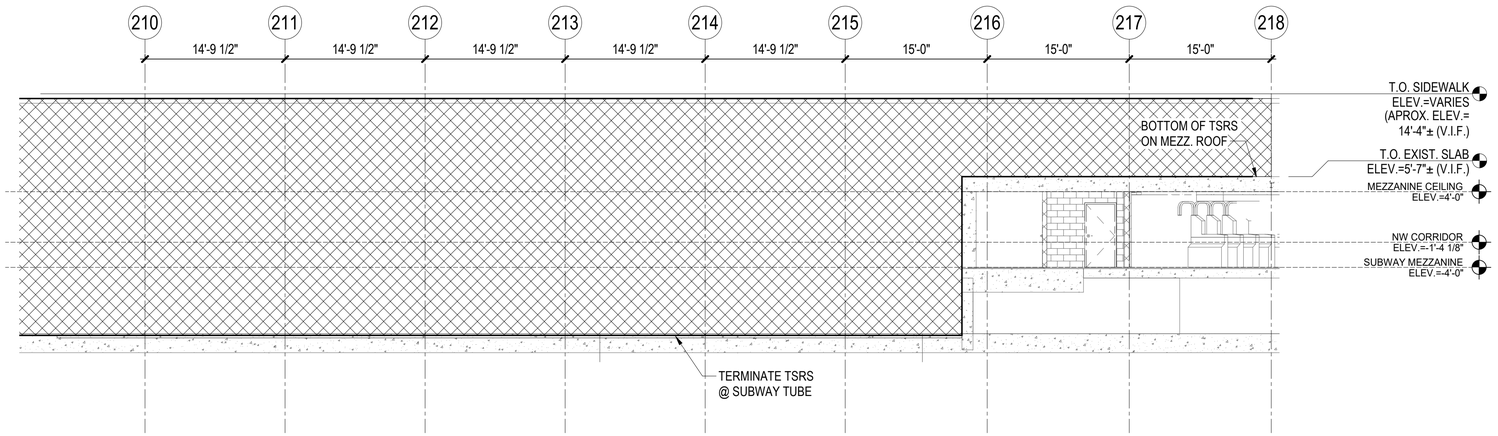

1 SOUTH CORRIDOR-TSRS EAST WALL

1/8" = 1'-0"

SOUTH CORRIDOR-TSRS EAST WALL:

1. CONTRACTOR SHALL BE CAREFUL NOT TO DAMAGE EXISTING WATER PROOFING OF THE SUBWAY TUBE. IF WATER PROOFING IS DAMAGED, CONTRACTOR SHALL REPAIR WATER PROOFING.
2. CONTRACTOR SHALL PROVIDE A SEPARATE FUTURE PERMIT FOR THE DELEGATED TSRS WALL BY A SPECIALTY ENGINEER.
3. THIS DETAIL IS FOR REFERENCE ONLY.

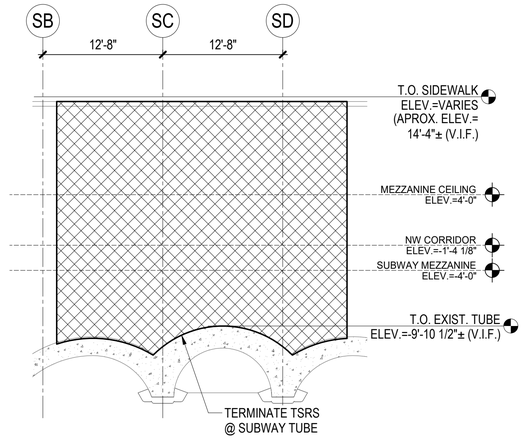

2 SOUTH CORRIDOR-TSRS SOUTH WALL

1/8" = 1'-0"

SOUTH CORRIDOR-TSRS SOUTH WALL:

1. CONTRACTOR SHALL BE CAREFUL NOT TO DAMAGE EXISTING WATER PROOFING OF THE SUBWAY TUBE. IF WATER PROOFING IS DAMAGED, CONTRACTOR SHALL REPAIR WATER PROOFING.
2. CONTRACTOR SHALL PROVIDE A SEPARATE FUTURE PERMIT FOR THE DELEGATED TSRS WALL BY A SPECIALTY ENGINEER.
3. THIS DETAIL IS FOR REFERENCE ONLY.

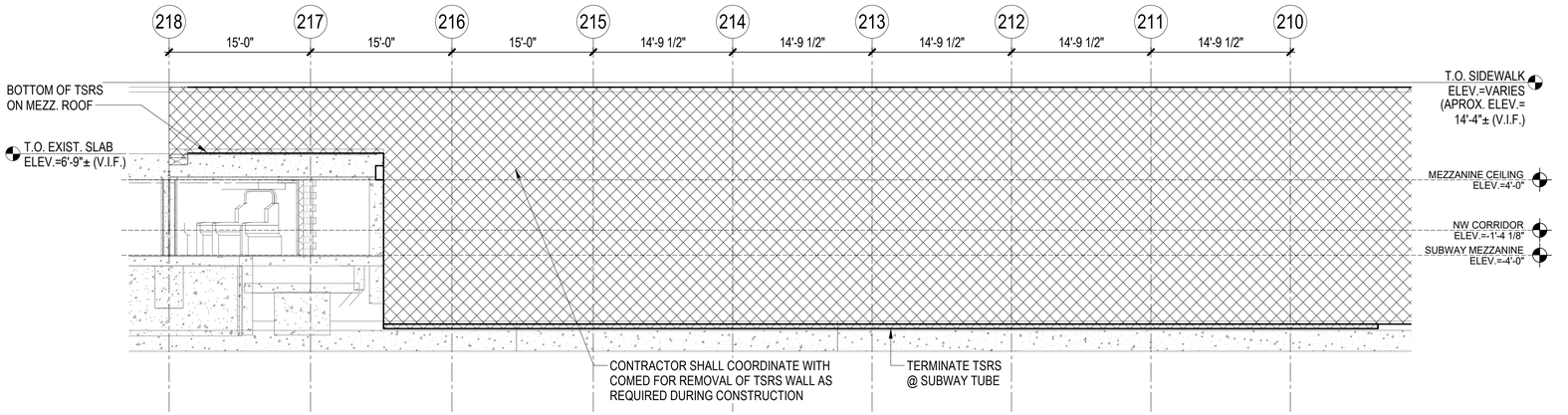

3 SOUTH CORRIDOR-TSRS WEST WALL

1/8" = 1'-0"

SOUTH CORRIDOR-TSRS WEST WALL:

1. CONTRACTOR SHALL BE CAREFUL NOT TO DAMAGE EXISTING WATER PROOFING OF THE SUBWAY TUBE. IF WATER PROOFING IS DAMAGED, CONTRACTOR SHALL REPAIR WATER PROOFING.
2. CONTRACTOR SHALL COORDINATE PROPOSED STORM SEWER ROUTING AND MAKE TEMPORARY SUPPORTS AS NEEDED TO ACCOMMODATE THROUGH THE TSRS WALL.
3. CONTRACTOR SHALL PROVIDE A SEPARATE FUTURE PERMIT FOR THE DELEGATED TSRS WALL BY A SPECIALTY ENGINEER.
4. THIS DETAIL IS FOR REFERENCE ONLY.

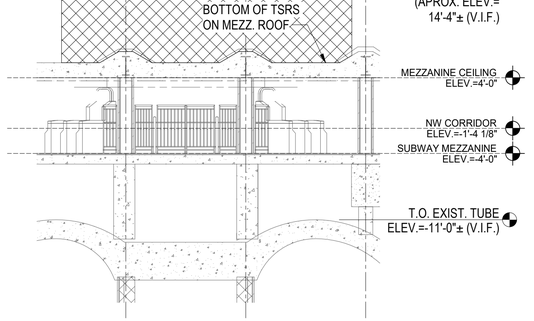

4 SOUTH CORRIDOR-TSRS NORTH WALL

1/8" = 1'-0"

SOUTH CORRIDOR-TSRS NORTH WALL:

1. CONTRACTOR SHALL BE CAREFUL NOT TO DAMAGE EXISTING WATER PROOFING OF THE SUBWAY TUBE. IF WATER PROOFING IS DAMAGED, CONTRACTOR SHALL REPAIR WATER PROOFING.
2. CONTRACTOR SHALL PROVIDE A SEPARATE FUTURE PERMIT FOR THE DELEGATED TSRS WALL BY A SPECIALTY ENGINEER.
3. THIS DETAIL IS FOR REFERENCE ONLY.

THIS DRAWING IS FOR REFERENCE ONLY (DELEGATED DESIGN)

DESIGN BY:										
DRAWN BY:										
CHECKED BY:		4	7/03/2023	ISSUED FOR BID						
APPROVED BY:		2	1/13/2023	ISSUED FOR PERMIT REVISION 2						
CDOT/APPROVED BY:		1	11/04/2022	ISSUED FOR PERMIT REVISION 1						
		0	9/9/2022	ISSUED FOR PERMIT	MMB	MDG	MJT			
		NO.	DATE	REVISIONS	DES.	DRW.	CHK.	DCCO	CDOT	

TRANSYSTEMS
222 SOUTH RIVERSIDE PLAZA SUITE 610
CHICAGO, ILLINOIS 60606

SKIDMORE, OWINGS & MERRILL LLP
224 SOUTH MICHIGAN AVENUE, SUITE 1000
CHICAGO, ILLINOIS 60604

CHICAGO DEPARTMENT OF TRANSPORTATION
DIVISION OF ENGINEERING

STATE / LAKE LOOP ELEVATED STATION
200 NORTH STATE STREET, CHICAGO, IL 60601

TEMPORARY SOIL RETENTION SYSTEM (TSRS) WALL ELEVATIONS

CDOT PROJECT D-1-209 | DATE: 9/9/2022

SPEC. NO.

DRAWING NO. SS-502

REVISION NO.4

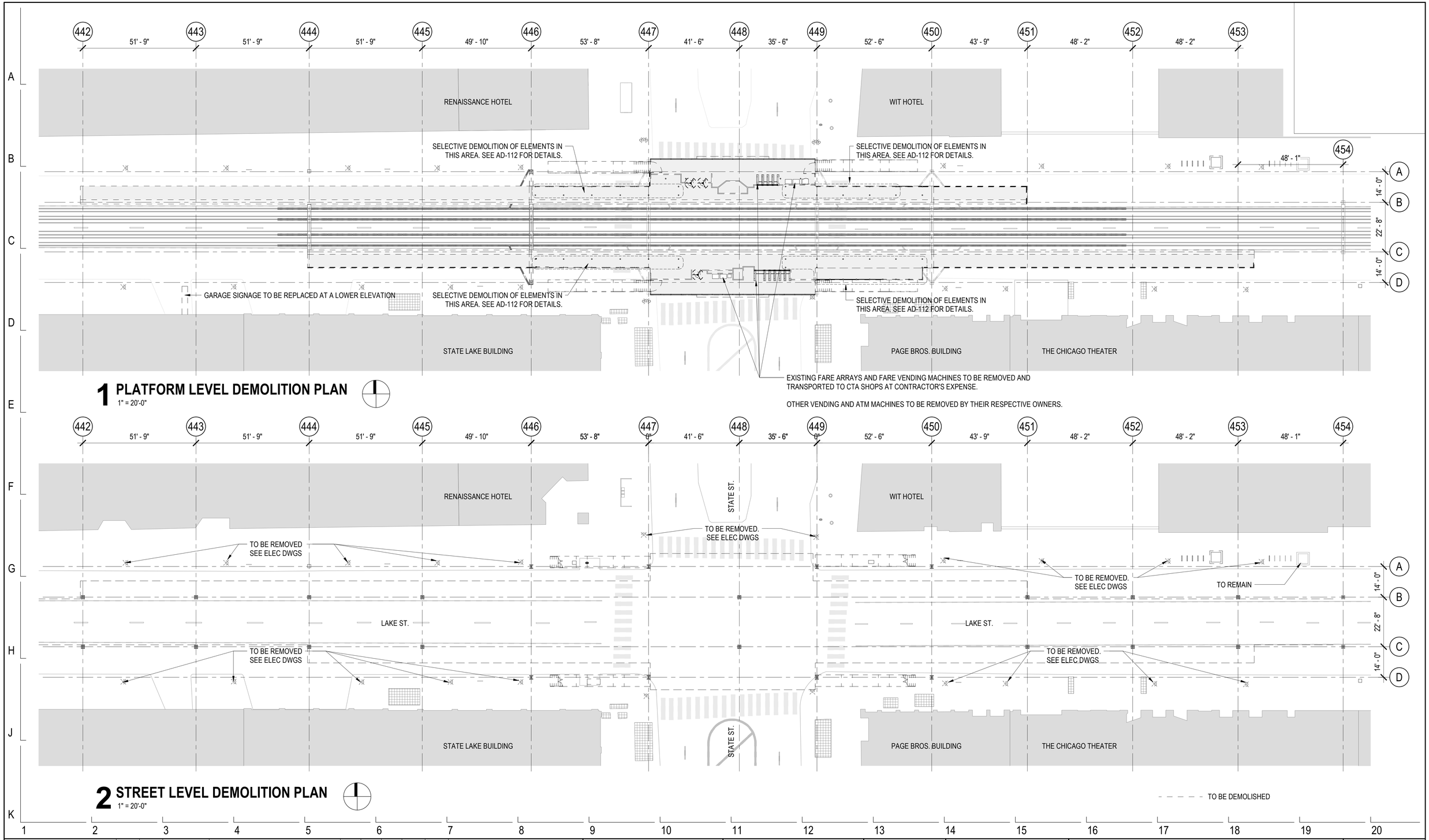

1 PLATFORM LEVEL DEMOLITION PLAN
1" = 20'-0"

2 STREET LEVEL DEMOLITION PLAN
1" = 20'-0"

DESIGN BY:										
DRAWN BY:		4	7/3/2023	ISSUED FOR BID						
CHECKED BY:										
APPROVED BY:		0	9/9/2022	ISSUED FOR PERMIT	MN	KH	SD			
CDOT/APPROVED BY:		NO.	DATE	REVISIONS	DES.	DRW.	CHK.	DCCO	CDOT	

TRANSYSTEMS
222 SOUTH RIVERSIDE PLAZA SUITE 610
CHICAGO, ILLINOIS 60606

SKIDMORE, OWINGS & MERRILL LLP
224 SOUTH MICHIGAN AVENUE, SUITE 1000
CHICAGO, ILLINOIS 60604

CHICAGO DEPARTMENT OF TRANSPORTATION
DIVISION OF ENGINEERING

STATE / LAKE LOOP ELEVATED STATION
200 NORTH STATE STREET, CHICAGO, IL 60601

SPEC. NO.

DEMOLITION PLANS

DRAWING NO.
AD-101

CDOT PROJECT D-1-209

DATE: 9/9/2022

REVISION NO.

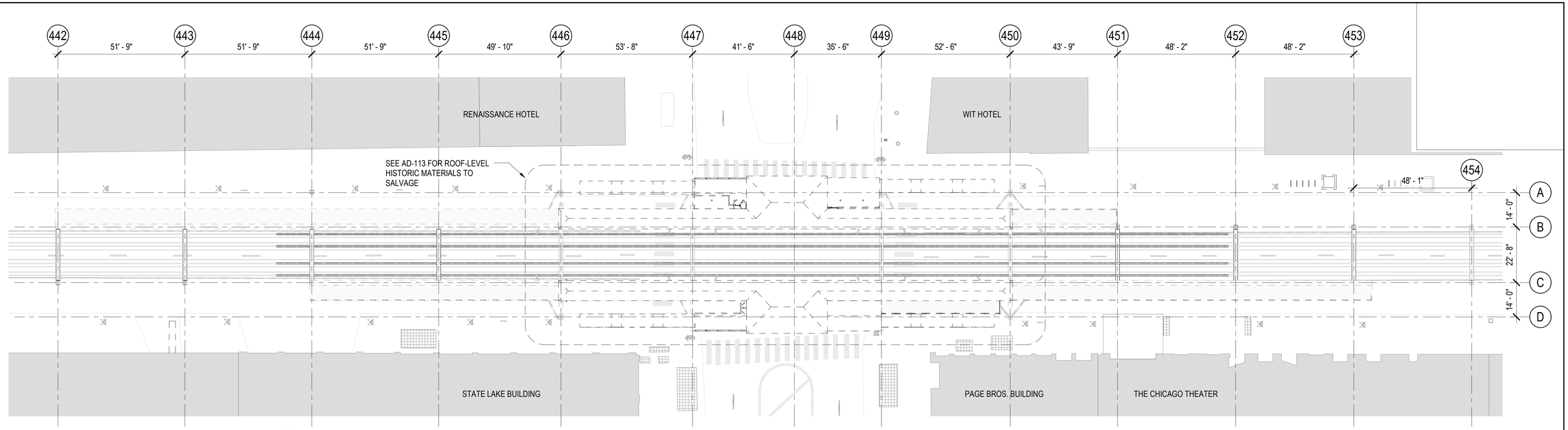

1 ROOF DEMOLITION PLAN

1" = 20'-0"

DESIGN BY:										
DRAWN BY:		4	7/3/2023	ISSUED FOR BID						
CHECKED BY:										
APPROVED BY:		0	9/9/2022	ISSUED FOR PERMIT	MN	KH	SD			
CDOT/APPROVED BY:		NO.	DATE	REVISIONS	DES.	DRW.	CHK.	DCCO	CDOT	

TRANSYSTEMS
222 SOUTH RIVERSIDE PLAZA SUITE 610
CHICAGO, ILLINOIS 60606

SKIDMORE, OWINGS & MERRILL LLP
224 SOUTH MICHIGAN AVENUE, SUITE 1000
CHICAGO, ILLINOIS 60604

CHICAGO DEPARTMENT OF TRANSPORTATION
DIVISION OF ENGINEERING

STATE / LAKE LOOP ELEVATED STATION
200 NORTH STATE STREET, CHICAGO, IL 60601

SPEC. NO.

DEMOLITION ROOF PLAN

DRAWING NO.
AD-102

CDOT PROJECT D-1-209

DATE: 9/9/2022

REVISION NO.

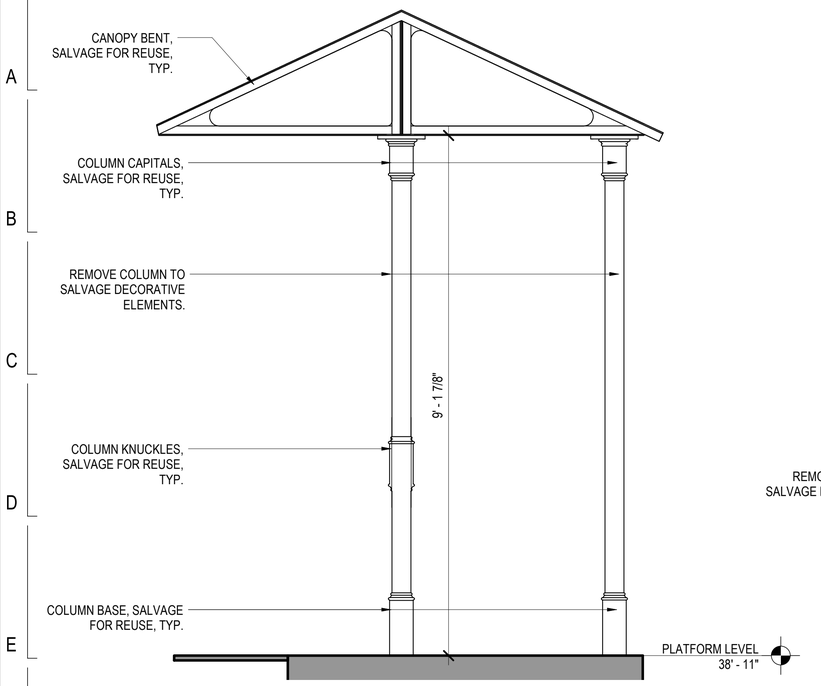

1 HISTORIC BENT, TYP. CROSS SECTION
3/4" = 1'-0"

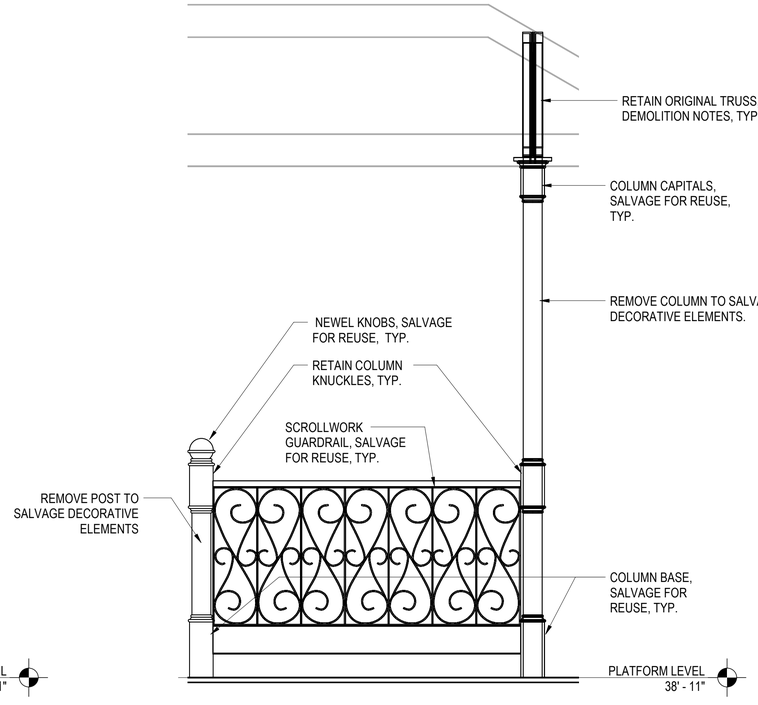

2 HISTORIC COLUMN + GUARDRAIL, TYP. ELEVATION
3/4" = 1'-0"

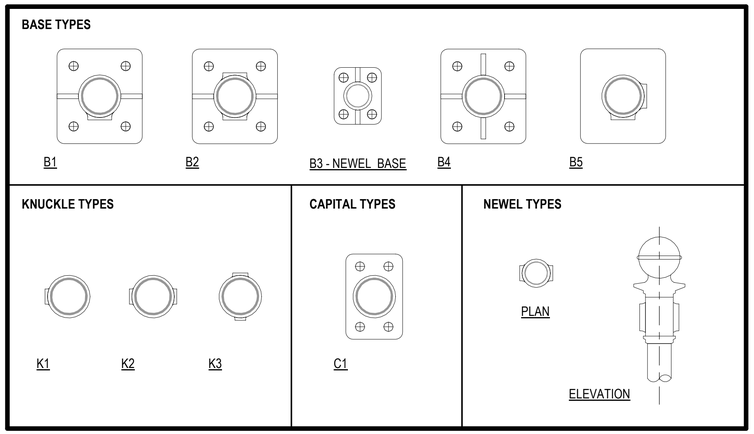

3 HISTORIC INVENTORY LEGEND
1 1/2" = 1'-0"

SEE AD-112 FOR QUANTITIES

SELECTIVE DEMOLITION FOR HISTORIC DECORATIVE COMPONENT AND MATERIAL NOTES:

1. SEE GENERAL DEMOLITION SHEETS FOR THE REMOVAL OF ALL NON-HISTORIC ELEMENTS WITHIN THE STATION HOUSE AND PLATFORM BOUNDARIES.
2. THE SELECTIVE DEMOLITION SHEETS (AD-111 - AD-113) DESCRIBE THE SELECTIVE DEMOLITION REQUIRED FOR THE REMOVAL, SALVAGE, AND REUSE OF HISTORIC DECORATIVE COMPONENTS AND MATERIAL.
3. NON-HISTORIC MATERIAL SUCH AS SIGNAGE MOUNTINGS, CONDUIT CLIPS, POLYCARBONATE PANELS AND FRAMES, EMERGENCY DEVICES, OR OTHER ITEMS THAT ARE ATTACHED TO HISTORIC DECORATIVE COMPONENTS OR MATERIAL SHALL BE SEPARATED FROM HISTORIC MATERIAL USING GENTLEST MEANS POSSIBLE THAT DO NOT DAMAGE THE HISTORIC MATERIAL TO REMAIN.
4. DO NOT TO CUT OR DISTURB HISTORIC DECORATIVE COMPONENTS INCLUDING BUT NOT LIMITED TO THE COLUMN CAPITALS, COLUMN BASES, MID-COLUMN COLLARS, NEWEL KNOBS, AND BENTS. TRIM THE ADJACENT NON-HISTORIC PIPE OR ANGLES TO ALLOW THE HISTORIC DECORATIVE COMPONENTS OR MATERIAL TO BE SEPARATED FROM THE ADJOINING ASSEMBLY.
5. REMOVE HISTORIC DECORATIVE COMPONENTS IN LARGEST UNITS POSSIBLE. THIS MAY INCLUDE ASSEMBLIES CONSISTING OF MULTIPLE HISTORIC COMPONENTS.
6. USE THE GENTLEST MEANS POSSIBLE IN EVERY METHOD OF REMOVAL AND TREATMENT OF HISTORIC COMPONENTS AND MATERIAL.
7. ALL DISASSEMBLY OF CAST IRON COMPONENTS REQUIRED FOR REUSE SHALL BE DONE OFF SITE IN CONTROLLED ENVIRONMENT USING THE GENTLEST MEANS AS SPECIFIED.
8. WHILE ON SITE, ALL HISTORIC DECORATIVE COMPONENTS AND MATERIAL SHALL BE DOCUMENTED, CATALOGUED, PROTECTED, PACKED FOR SHIPMENT, LABELED, AND DELIVERED TO AN OFF-SITE WORKSHOP WHERE FURTHER DISASSEMBLY AND REPAIR WORK WILL TAKE PLACE. PRIORITY IN REMOVAL AND DISASSEMBLY MUST BE GIVEN TO THE HISTORIC COMPONENTS FOR SALVAGE AND REUSE.
9. AT THE OFF SITE WORKSHOP THE CONTRACTOR MUST DISASSEMBLE ENOUGH HISTORIC DECORATIVE COMPONENTS AND MATERIAL TO ENSURE SUFFICIENT STOCK FOR THE INSTALLATION OF REUSED MATERIAL IN NEW STATION, SEE SHEETS A-443 AND A-444. CONTRACTOR SHALL SALVAGE MINIMUM 50% OVERAGE OF ALL REQUIRED AMOUNTS TO ALLOW FOR MOCK UPS, UNKNOWN CONDITIONS, ETC.
10. ANY HISTORIC DECORATIVE COMPONENTS AND MATERIAL NOT RETAINED FOR REUSE BY THE CONTRACTOR FOR THIS PROJECT BECOMES PROPERTY OF THE OWNER. THE MATERIAL SHALL BE RETAINED BY CTA AND WILL BE MADE AVAILABLE TO OTHERS, SEE NOTE #16.
11. IF A HISTORIC DECORATIVE COMPONENT THAT IS TO BE SALVAGED AND REUSED IS DAMAGED BEYOND REPAIR DURING REMOVAL AND NO SURPLUS PARTS ARE AVAILABLE, A NEW ELEMENT SHALL BE CAST OF MATCHING MATERIAL WITH MATCHING DIMENSIONS SO AS TO REPLICATE THE HISTORIC ELEMENT EXACTLY.
12. THE COLUMN CAPITALS, BASES, MID-COLUMN COLLARS, AND NEWEL KNOBS ARE SIMILAR AND PRESUMED TO BE OF CAST IRON. COLUMNS ARE MADE FROM PIPE, WITHOUT ANY EMBELLISHMENT, PROFILING, OR OTHER DETAIL.
13. THE CANOPY BENTS ARE PRESUMED TO BE EARLY STEEL ANGLE SECTIONS. THE ANGLES ARE CONNECTED MECHANICALLY WITH RIVETS. THE CONTRACTOR SHALL TEST HISTORIC MATERIAL TO DETERMINE APPROPRIATE WELDING PROCEDURES, SEE STRUCTURAL DRAWINGS.
14. THE SCROLLWORK GUARDRAILS ARE COMPRISED OF SEVEN IDENTICAL UNITS CONNECTED TOGETHER, FLIPPED ON EITHER AXIS IN REGULAR SEQUENCE TO PROVIDE THE DECORATIVE ARRANGEMENT. THESE ELEMENTS SHALL BE SALVAGED AS A UNIT, CLEANLY CUT AT EITHER END TO FREE THEM FROM ADJACENT COLUMNS.
15. THE SELECTED CONTRACTOR SHALL DEMONSTRATE THE REMOVAL OF A CANOPY BENT, A LENGTH OF SCROLLWORK GUARDRAIL, AND ONE OF EACH TYPE OF HISTORIC DECORATIVE COMPONENT TO DETERMINE BEST METHODS. THE REMOVAL METHOD WILL BE REVIEWED IN COORDINATION WITH THE OWNER AND THE HISTORIC PRESERVATION ARCHITECT BEFORE ADDITIONAL REMOVAL WORK SHALL OCCUR.
16. HISTORIC DECORATIVE COMPONENTS AND MATERIAL NOT REUSED IN THE NEW CONSTRUCTION SHALL BE TEMPORARILY RETAINED SHELTERED FROM THE ELEMENTS. CDOT WILL ADVERTISE AVAILABILITY OF UNUSED HISTORIC DECORATIVE COMPONENTS AND MATERIAL TO POTENTIAL GROUPS OF INTEREST. HISTORIC DECORATIVE COMPONENTS AND MATERIAL SHALL BE MADE AVAILABLE FOR REMOVAL FROM CTA WEST SHOP (3900 W. MAYPOLE AVE. CHICAGO, IL 60624) DURING A TWO-WEEK PERIOD FOLLOWING CONFIRMATION FROM GROUPS OF INTEREST. GROUPS OF INTEREST WILL BE RESPONSIBLE FOR ALL LABOR, MATERIALS, TRANSPORTATION AND COORDINATION OF RETRIEVAL OF HISTORIC MATERIAL FROM THE CTA SITE.

DESIGN BY:										
DRAWN BY:		4	7/3/2023	ISSUED FOR BID						
CHECKED BY:										
APPROVED BY:		0	9/9/2022	ISSUED FOR PERMIT	Designe	Author	Checker			
CDOT/APPROVED BY:		NO.	DATE	REVISIONS	DES.	DRW.	CHK.	DCCO	CDOT	

TRANSYSTEMS
222 SOUTH RIVERSIDE PLAZA SUITE 610
CHICAGO, ILLINOIS 60606

SKIDMORE, OWINGS & MERRILL LLP
224 SOUTH MICHIGAN AVENUE, SUITE 1000
CHICAGO, ILLINOIS 60604

JOHNSON LASKY KINDELIN ARCHITECTS
230 WEST HURON STREET, SUITE 510
CHICAGO, ILLINOIS 60654

CHICAGO DEPARTMENT OF TRANSPORTATION
DIVISION OF ENGINEERING

STATE / LAKE LOOP ELEVATED STATION
200 NORTH STATE STREET, CHICAGO, IL 60601

SELECTIVE DEMOLITION GENERAL NOTES

CDOT PROJECT D-1-209

DATE: 9/9/2022

SPEC. NO.

DRAWING NO. AD-111

REVISION NO.

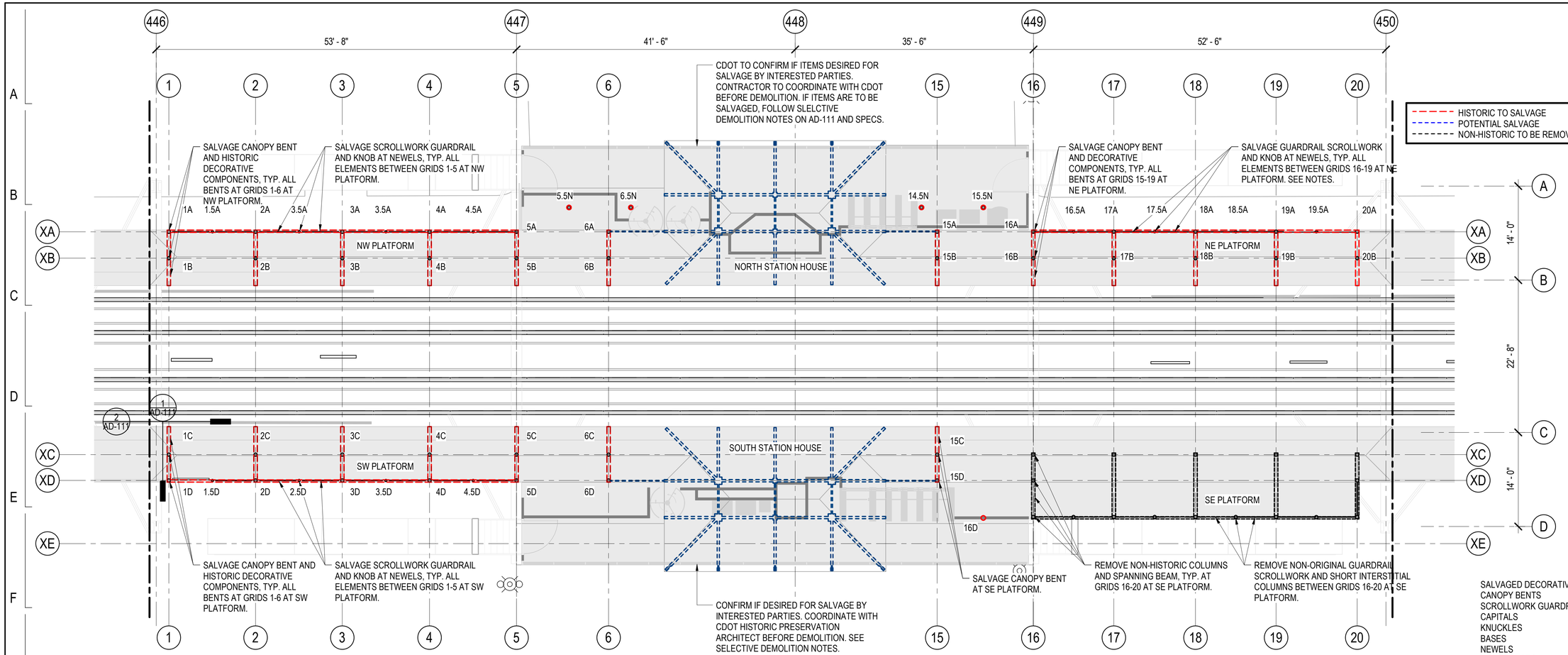

1 PLATFORM LEVEL SELECTIVE DEMOLITION PLAN

1/8" = 1'-0"

SALVAGED DECORATIVE HISTORIC COMPONENT COUNT:

CANOPY BENTS	18
SCROLLWORK GUARDRAIL SECTIONS	24
CAPITALS	32
KNUCKLES	14
BASES	36
NEWELS	6
NEWEL BASES	9

ELEMENT	BASE TYPE	SALVAGE	KNUCKLE TYPE	SALVAGE	CAPITAL TYPE	SALVAGE
NW-PLATFORM						
XA.1	B5 - SALVAGE AND REUSE	Yes	K2 - UNSALVAGEABLE		C1- SALVAGE AND REUSE	Yes
XA.1.5	B3 - SALVAGE AND REUSE	Yes	NEWEL - UNSALVAGEABLE		-	
XA.2	B3 - SALVAGE AND REUSE	Yes	K2 - UNSALVAGEABLE		C1- SALVAGE AND REUSE	Yes
XA.2.5	B3 - SALVAGE AND REUSE	Yes	NEWEL - SALVAGE AND REUSE	Yes	-	
XA.3	B2 - SALVAGE AND REUSE	Yes	K2 - SALVAGE AND REUSE	Yes	C1- SALVAGE AND REUSE	Yes
XA.3.5	[VIF]	Yes	NEWEL -UNSALVAGEABLE		-	
XA.4	B1 - SALVAGE AND REUSE	Yes	K2 - UNSALVAGEABLE		C1 - UNSALVAGEABLE	
XA.4.5	B3 - SALVAGE AND REUSE	Yes	NEWEL - SALVAGE AND REUSE	Yes	-	
XA.5	B4 -SALVAGE AND REUSE	Yes	K1 - SALVAGE AND REUSE	Yes	C1- SALVAGE AND REUSE	Yes
XA.6	B2 - SALVAGE AND REUSE	Yes	K1 - SALVAGE AND REUSE	Yes	C1- SALVAGE AND REUSE	Yes
XB.1	B2 - SALVAGE AND REUSE	Yes	K3 - UNSALVAGEABLE		C1- SALVAGE AND REUSE	Yes
XB.2	B4 - SALVAGE AND REUSE	Yes	-		C1- SALVAGE AND REUSE	Yes
XB.3	B4 - SALVAGE AND REUSE	Yes	-		C1- SALVAGE AND REUSE	Yes
XB.4	B4 - SALVAGE AND REUSE	Yes	-		C1- SALVAGE AND REUSE	Yes
XB.5	B4 - SALVAGE AND REUSE	Yes	-		C1- SALVAGE AND REUSE	Yes
XB.6	[VIF]	Yes	[VIF]	Yes	[VIF]	
XN.5.5	B2 - SALVAGE AND REUSE	Yes	K2 - SALVAGE AND REUSE	Yes	C1- SALVAGE AND REUSE	Yes
XN.6.5	B1 - SALVAGE AND REUSE	Yes	K2 - SALVAGE AND REUSE	Yes	-	
NE-PLATFORM						
XA.15	B1 -SALVAGE AND REUSE	Yes	K2 - SALVAGE AND REUSE	Yes	C1- SALVAGE AND REUSE	Yes
XA.16	B1 - SALVAGE AND REUSE	Yes	K1 - SALVAGE AND REUSE	Yes	C1- SALVAGE AND REUSE	Yes
XA.16.5	B3 / [VIF] - SALVAGE AND REUSE	Yes	NEWEL - SALVAGE AND REUSE	Yes	-	
XA.17	[VIF]		[VIF]	No	-	

ELEMENT	BASE TYPE	SALVAGE	KNUCKLE TYPE	SALVAGE	CAPITAL TYPE	SALVAGE
XA.17.5	B3 - SALVAGE AND REUSE	Yes	NEWEL - SALVAGE AND REUSE	Yes	-	
XA.18	NOT HISTORIC		NOT HISTORIC		-	
XA.18.5	B3 - SALVAGE AND REUSE	Yes	NEWEL - FAILED/UNSALVAGEABLE		-	
XA.19	B2 - SALVAGE AND REUSE	Yes	K2 - UNSALVAGEABLE		C1- SALVAGE AND REUSE	Yes
XA.19.5	B3 - SALVAGE AND REUSE	Yes	NEWEL - SALVAGE AND REUSE	Yes	-	
XA.20	B2 - SALVAGE AND REUSE	Yes	K1-HEAVILY CORRODED. ATTEMPT TO SALVAGE AND REUSE	Yes	C1- SALVAGE AND REUSE	Yes
XB.15	B4 - SALVAGE AND REUSE	Yes	-		C1- SALVAGE AND REUSE	Yes
XB.16	B4 - SALVAGE AND REUSE	Yes	-		C1- SALVAGE AND REUSE	Yes
XB.17	B4 - SALVAGE AND REUSE	Yes	-		C1- SALVAGE AND REUSE	Yes
XB.18	B4 - SALVAGE AND REUSE	Yes	-		C1- SALVAGE AND REUSE	Yes
XB.19	B4 - SALVAGE AND REUSE	Yes	-		C1- SALVAGE AND REUSE	Yes
XB.20	B4 - SALVAGE AND REUSE	Yes	K3 - SALVAGE AND REUSE	Yes	C1- SALVAGE AND REUSE	Yes
XN.14.5	B1 - SALVAGE AND REUSE	Yes	K2 - SALVAGE AND REUSE	Yes	-	
XN.15.5	[VIF]	Yes	[VIF]	Yes	[VIF]	Yes
SW-PLATFORM						
XC.1	B4 - SALVAGE AND REUSE	Yes	-		C1- SALVAGE AND REUSE	Yes
XC.2	B4 - SALVAGE AND REUSE	Yes	-		C1- SALVAGE AND REUSE	
XC.3	B4 -SALVAGE AND REUSE	Yes	-		C1- SALVAGE AND REUSE	Yes
XC.4	B4 -SALVAGE AND REUSE	Yes	-		C1- SALVAGE AND REUSE	Yes
XC.5	B4 - SALVAGE AND REUSE	Yes	-		C1- SALVAGE AND REUSE	Yes
XC.6	NOT HISTORIC		NOT HISTORIC		NOT HISTORIC	
XD.1	B2 - SALVAGE AND REUSE. WELD ON W-SIDE	Yes	K2 - SALVAGE AND REUSE. WELD ON W-SIDE	Yes	C1- SALVAGE AND REUSE	Yes

ELEMENT	BASE TYPE	SALVAGE	KNUCKLE TYPE	SALVAGE	CAPITAL TYPE	SALVAGE
XD.1.5	B3 - SALVAGE AND REUSE	Yes	NEWEL - SALVAGE AND REUSE	Yes	-	
XD.2	NOT HISTORIC		NOT HISTORIC		-	
XD.2.5	[VIF]	Yes	[VIF]	Yes	[VIF]	Yes
XD.3	B2 - SALVAGE AND REUSE	Yes	K2 - SALVAGE AND REUSE	Yes	C1- SALVAGE AND REUSE	Yes
XD.3.5	B3 - SALVAGE AND REUSE	Yes	NEWEL -SALVAGE AND REUSE	Yes	-	
XD.4	B1 - SALVAGE AND REUSE	Yes	[VIF]		C1- SALVAGE AND REUSE	Yes
XD.4.5	NOT HISTORIC		NOT HISTORIC		NOT HISTORIC	
XD.5	NOT HISTORIC		NOT HISTORIC		NOT HISTORIC	
XD.6	NOT HISTORIC		NOT HISTORIC		NOT HISTORIC	
SE-PLATFORM						
XC.15	B4 - SALVAGE AND REUSE	Yes	-		C1- SALVAGE AND REUSE	Yes
XC.16	B4 - SALVAGE AND REUSE	Yes	-		C1- SALVAGE AND REUSE	Yes
XC.17	NOT HISTORIC		NOT HISTORIC		NOT HISTORIC	
XC.18	NOT HISTORIC		NOT HISTORIC		NOT HISTORIC	
XC.19	NOT HISTORIC		NOT HISTORIC		NOT HISTORIC	
XC.20	NOT HISTORIC		NOT HISTORIC		NOT HISTORIC	
XD.15	B1 - SALVAGE AND REUSE	Yes	K2 - SALVAGE AND REUSE	Yes	C1- SALVAGE AND REUSE	Yes
XD.16	B1 - SALVAGE AND REUSE	Yes	K2 - SALVAGE AND REUSE	Yes	C1- SALVAGE AND REUSE	Yes
XD.20	NOT HISTORIC		NOT HISTORIC		NOT HISTORIC	
XE.16	NOT HISTORIC		NOT HISTORIC		NOT HISTORIC	
XE.16.5	NOT HISTORIC		NOT HISTORIC		NOT HISTORIC	

ELEMENT	BASE TYPE	SALVAGE	KNUCKLE TYPE	SALVAGE	CAPITAL TYPE	SALVAGE
XE.17	NOT HISTORIC		NOT HISTORIC		NOT HISTORIC	
XE.17.5	NOT HISTORIC		NOT HISTORIC		NOT HISTORIC	
XE.18	NOT HISTORIC		NOT HISTORIC		NOT HISTORIC	
XE.18.5	NOT HISTORIC		NOT HISTORIC		NOT HISTORIC	
XE.19	NOT HISTORIC		NOT HISTORIC		NOT HISTORIC	
XE.19.5	NOT HISTORIC		NOT HISTORIC		NOT HISTORIC	
XE.20	NOT HISTORIC		NOT HISTORIC		NOT HISTORIC	
Grand total: 70						

SEE AD-111 FOR DETAILS

SALVAGED ITEMS REQUIRED FOR REUSE:

CANOPY BENTS	12
GUARDRAIL SECTIONS	8
CAPITALS	24
KNUCKLES	12
BASES	24
NEWELS	4
NEWEL BASES	4

					DES.	DRW.	CHK.	DCCO	CDOT
DESIGN BY:									
DRAWN BY:		4	7/3/2023	ISSUED FOR BID					
CHECKED BY:									
APPROVED BY:		0	9/9/2022	ISSUED FOR PERMIT	Designe	Author	Checker		
CDOT/APPROVED BY:		NO.	DATE	REVISIONS					

TRANSYSTEMS
222 SOUTH RIVERSIDE PLAZA SUITE 610
CHICAGO, ILLINOIS 60606

SKIDMORE, OWINGS & MERRILL LLP
224 SOUTH MICHIGAN AVENUE, SUITE 1000
CHICAGO, ILLINOIS 60604

JOHNSON LASKY KINDELIN ARCHITECTS
230 WEST HURON STREET, SUITE 510
CHICAGO, ILLINOIS 60654

CHICAGO DEPARTMENT OF TRANSPORTATION
DIVISION OF ENGINEERING

STATE / LAKE LOOP ELEVATED STATION
200 NORTH STATE STREET, CHICAGO, IL 60601

PLATFORM LEVEL SELECTIVE DEMOLITION PLAN

CDOT PROJECT D-1-209

DATE: 9/9/2022

SPEC. NO.

DRAWING NO. AD-112

REVISION NO.

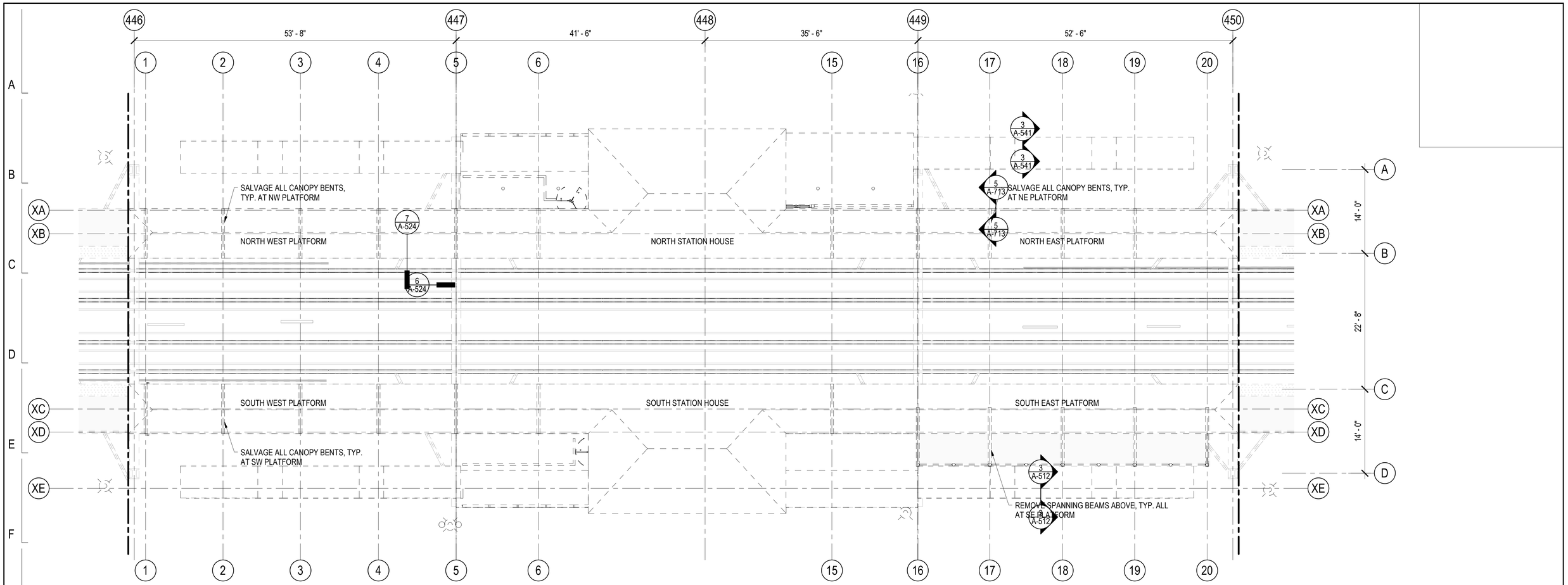

1 ROOF SELECTIVE DEMOLITION PLAN

1/8" = 1'-0"

DESIGN BY:										
DRAWN BY:		4	7/3/2023	ISSUED FOR BID						
CHECKED BY:										
APPROVED BY:		0	9/9/2022	ISSUED FOR PERMIT	Designe	Author	Checker			
CDOT/APPROVED BY:		NO.	DATE	REVISIONS	DES.	DRW.	CHK.	DCCO	CDOT	

TRANSYSTEMS
222 SOUTH RIVERSIDE PLAZA SUITE 610
CHICAGO, ILLINOIS 60606

SKIDMORE, OWINGS & MERRILL LLP
224 SOUTH MICHIGAN AVENUE, SUITE 1000
CHICAGO, ILLINOIS 60604

JOHNSON LASKY KINDELIN ARCHITECTS
230 WEST HURON STREET, SUITE 510
CHICAGO, ILLINOIS 60654

CHICAGO DEPARTMENT OF TRANSPORTATION
DIVISION OF ENGINEERING

STATE / LAKE LOOP ELEVATED STATION
200 NORTH STATE STREET, CHICAGO, IL 60601

ROOF SELECTIVE DEMOLITION PLAN

CDOT PROJECT D-1-209 | DATE: 9/9/2022

SPEC. NO.

DRAWING NO. AD-113

REVISION NO.

MATERIAL DESIGNATIONS

- SOIL
- GRAVEL, COMPACTED FILL
- ASPHALT DRIVE, ASPHALT MEMBRANE
- CONCRETE
- BRICK MASONRY
- CONCRETE MASONRY
- STONE MASONRY
- ALUMINUM
- STEEL
- ORNAMENTAL METALS (BRASS, BRONZE, ETC)
- PLYWOOD
- MEDIUM DENSITY FIBERBOARD
- SOLID WOOD
- CONTINUOUS WOOD BLOCKING
- NON-CONTINUOUS WOOD BLOCKING
- FIREPROOFING
- INSULATION, SEMI-RIGID (ROCK WOOL, FIBER BOARD)
- INSULATION, RIGID (POLYISOCYANURATE, POLYSTYRENE)
- INSULATION, BATT (GLASS FIBER BATT, ACOUSTIC BATT)
- ACOUSTIC CEILING TILE
- ACOUSTIC WALL PANEL
- GYPSUM WALL BOARD, FACING BOARD
- PLASTER, SAND, GROUT, MORTAR, LEVELER
- TERRAZZO
- TILE
- WOOD FLOORING, WOOD TRIM

SYMBOLS

EXTERIOR ELEVATION

GRID

DETAIL SYMBOL

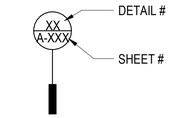

BUILDING SECTION

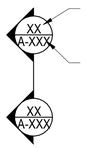

LEVEL INDICATOR

ENLARGED PLAN

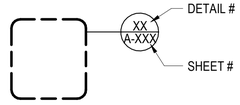

INTERIOR ELEVATION

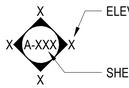

SPOT ELEVATION

ABBREVIATIONS

&	AND
/	ANGLE
@	AT
#	NUMBER
A/C	AIR CONDITIONING
A/V	AUDIO VISUAL
ACONC	ARCHITECTURAL CONCRETE
ACST	ACOUSTICAL
ACST PLAS	ACOUSTICAL PLASTER
ACT	ACOUSTICAL CEILING TILE
AD	AREA DRAIN
ADJ	ADJACENT
ADR	ACCESS DOOR
AESS	ARCHITECTURALLY EXPOSED STRUCTURAL STEEL
AF	ACCESS FLOOR
AFF	ABOVE FINISHED FLOOR
AGGR	AGGREGATE
AHU	AIR HANDLING UNIT
ALT	ALTERNATE
ALUM	ALUMINUM
ANOD	ANODIZED
APPROX	APPROXIMATE(LY)
AP	ACCESS PANEL
ARC	ARCHITECTURAL CONCRETE
ARCH	ARCHITECT(URAL)
AUTO	AUTOMATIC
AUX	AUXILIARY
AVG	AVERAGE
B/	BOTTOM OF
BD	BOARD
BEV	BEVELED
BLDG	BUILDING
BLKG	BLOCK(ING)
BM	BEAM
BMK	BENCHMARK
BOC	BOTTOM OF CURB
BWP	BENTONITE WATERPROOFING
CAP	CAPACITY
CB	CATCH BASIN
CCTV	CLOSED CIRCUIT TELEVISION
CEM PLAS	CEMENT PLASTER
CG	CORNER GUARD(S)
CI	CAST IRON
CJ	CONTROL JOINT
CL	CENTER LINE
CLG	CEILING
CLG HT	CEILING HEIGHT
CLO	CLOSET
CLR OPNG	CLEAR OPENING
CMU	CONCRETE MASONRY UNIT(S)
CO	CLEANOUT
COL	COLUMN
CONC	CONCRETE
CONF	CONFERENCE
CONN	CONNECT(ION)
CONSTR	CONSTRUCTION
CONT	CONTINUOUS / CONTINUE
CORR	CORRIDOR
CRB	CEMENTITIOUS ROOF BOARD
CS	CORK SHEET
CSK	COUNTERSINK / COUNTERSUNK
CSWK	CASEWORK
CT	CERAMIC TILE
CTR	CENTER(ED)
CU	CUBIC
CW	COLD WATER
DD	DECK DRAIN
DEG	DEGREE(S)
DEPT	DEPARTMENT
DET	DETAIL(S)
DF	DRINKING FOUNTAIN
DIA	DIAMETER
DIAG	DIAGONAL
DIFF	DIFFUSER(S)
DIM	DIMENSION(S)
DISP	DISPENSER
DIV	DIVIDE / DIVISION
DL	DEAD LOAD
DMPF	DAMPPROOFING
DMPR	DAMPER
DN	DOWN
DP	DRAINAGE PANEL
DRLV	DOOR LOUVER
DS	DOWNSPOUT
DWG	DRAWING(S)
EA	EACH
EC	EXPOSED CONSTRUCTION
EJ	EXPANSION JOINT
EJC	EXPANSION JOINT COVER
EL	ELEVATION (GRADE)
ELAST	ELASTOMERIC
ELEC	ELECTRIC(AL)
ELEC CL	ELECTRIC CLOSET
ELEV	ELEVATOR
ELEV	ELEVATION (BLDG)
EMER	EMERGENCY
ENCL	ENCLOSURE / ENCLOSE(D)
ENTR	ENTRANCE
EOS	EDGE OF SLAB
EPSS	EXPOSED PAINTED STRUCTURAL STEEL
EQ	EQUAL
EQUIP	EQUIPMENT
ESC	ESCALATOR
EW	EACH WAY
EWC	ELECTRIC WATER COOLER
EXH	EXHAUST
EXIST	EXISTING
EXP	EXPOSED
EXPN	EXPANSION
EXT	EXTERIOR
FA	FIRE ALARM
FAAP	FIRE ALARM ANNUNCIATOR PANEL
FAI	FRESH AIR INTAKE
FD	FLOOR DRAIN
FDMPR	FIRE DAMPER
FDTN	FOUNDATION
FE	FIRE EXTINGUISHER
FEC	FIRE EXTINGUISHER CABINET
FEM	FIBER ENTRANCE MAT
FH	FIRE HYDRANT
FHC	FIRE HOSE CABINET
FHR	FIRE HOSE RACK (REEL)
FIN	FINISH(ED)
FIN FL	FINISH FLOOR
FIN GR	FINISH GRADE
FLEX	FLEXIBLE
FLH	FLASHING
FLMT	FLUSH MOUNTED
FLR	FLOOR(S)
FLS	FLOOR SEALER
FLUOR	FLUORESCENT
FO	FINISHED OPENING
FP	FIREPROOFING
FR	FIRE RETARDANT / RATING / RESIST.
FRM	FRAME
FRTW	FIRE RETARDANT TREATED WOOD
FSS	FIRE STOPPING SYSTEM
FSE	FOOD SERVICE EQUIPMENT
FSP	FIRE STANDPIPE
FT	FEET (FOOT)
GA	GAUGE
GAL	GALLON(S)
GALV	GALVANIZED
GALV STL	HOT-DIP GALVANIZED STRUCTURAL STUDS
GFRC	GLASS FIBER REINFORCED CONCRETE
GRFG	GLASS FIBER REINFORCED GYPSUM
GG	GLAZING GASKET
GI	GALVANIZED IRON
GL	GLASS
GL BLK	GLASS BLOCK
GND	GROUND
GRAN	GRANITE
GRD	GRADE
GRL	GRILLE
GS	GLAZING SEALANT
GWB	GYPSUM WALLBOARD
GYP BD	GYPSUM BOARD
GYP PLAS	GYPSUM PLASTER
HD	HEAD
HDF	HIGH-DENSITY GLASS FIBER BOARD
HDW	HARDWARE
HEX	HEXAGON(AL)
HM	HOLLOW METAL
HNDRL	HANDRAIL
HO	HOLD OPEN
HORIZ	HORIZONTAL
HPT	HIGH POINT
HR	HOUR(S) (FIRE RESISTANCE RATING)
HT	HEIGHT
HVAC	HEATING, VENTILATING, AIR CONDITIONING
ID	INSIDE DIAMETER
INCL	INCLUDE(D) / INCLUSIVE / INCLUDING
INFO	INFORMATION
INS	INSULATION / INSULATE(D)
INSUL	INSULATION
INT	INTERIOR
JC	JANITOR CLOSET
JF	JOINT FILLER
JG	JOINT GASKET
JT	JOINT
KD	KNOCKDOWN
KO	KNOCKOUT
KPL	KICKPLATE
LAM	LAMINATE(D)
LAV	LAVATORY
LBS	POUND(S)
LD	LINEAR DIFFUSER
LDE	LOADING DOCK EQUIPMENT
LH	LEFT HAND
LIN	LINEAR
LKR	LOCKERS
LMST	LIMESTONE
LONG	LONGITUDINAL
LPT	LOW POINT
LR	LIVING ROOM
LTG	LIGHTING
LVR	LOUVER(ED)
MACH	MACHINE
MAINT	MAINTAIN / MAINTENANCE
MATL	MATERIAL
MAX	MAXIMUM
MB	METAL BASE
MBD	DRY ERASE MARKER BOARD
MBL	MARBLE
MDF	MEDIUM DENSITY FIBERBOARD
MECH	MECHANICAL
MED	MEDIUM
MEZZ	MEZZANINE
MFR	MANUFACTURER
MH	MANHOLE
MIN	MINIMUM
MISC	MISCELLANEOUS
ML	METAL LATH
ML WK	MILLWORK
MLDG	MOLDING
MO	MASONRY OPENING
MP	METAL PANEL
MTD	MOUNTED
MTL	METAL
MUL	MULLION
N	NORTH
NA	NOT APPLICABLE
NC	NOISE CRITERIA
NIC	NOT IN CONTRACT
NO	NUMBER
NOM	NOMINAL
NRC	NOISE REDUCTION COEFFICIENT
NTS	NOT TO SCALE
OA	OUTSIDE AIR
OC	ON CENTER
OD	OUTSIDE DIAMETER
OF	OUTSIDE FACE
OFD	OVERFLOW DRAIN
OH DR	OVERHEAD COILING DOOR
OPH	OPPOSITE HAND
OPNG	OPENING
OPP	OPPOSITE
OPR	OPERATING / OPERABLE
ORD	OVERFLOW ROOF DRAIN
OZ	OUNCE
PA	PUBLIC ADDRESS
PAR	PARALLEL
PART	PARTIAL
PAV	PAVERS
PB	PARTICLE BOARD
PCC	PRECAST CONCRETE
PERF	PERFORATED
PERP	PERPENDICULAR
PL	PLASTIC LAMINATE
PLA	PLASTER
PLAM	PLASTIC LAMINATE
PLBG	PLUMBING
PLYWD	PLYWOOD
PNEU	PNEUMATIC
POL	POLISHED
PPV	PRECAST CONCRETE PAVERS
PR	PAIR
PREFAB	PREFABRICATE(D)
PROP	PROPERTY
PT	PAINT(ED)
PTN	PARTITION
PVC	POLYVINYL CHLORIDE
PVG	PAVING
PWR	POWER
QT	QUARRY TILE
QTY	QUANTITY
R	RISER
RA	RETURN AIR
RAD	RADIUS
RB	RESILIENT BASE
RC	REINFORCED CONCRETE
RD	ROOF DRAIN
RDO	ROOF DRAIN OVERFLOW
RECPT	RECEPTACLE
RECT	RECTANGLE
REF	REFERENCE
REINF	REINFORCE(D, -ING, -MENT)
REQD	REQUIRED
RES	EPOXY-RESIN TERRAZZO
REV	REVISED / REVISION
RF	RESILIENT FLOORING
RFA	ROOFING ACCESSORIES
RH	RIGHT HAND
RM	ROOM
RMX	RESIN MATRIX
RND	ROUND(ED)
RO	ROUGH OPENING
ROW	RIGHT OF WAY
RS	ROOFING SYSTEM
RSF	RESILIENT SHEET FLASHING
SA	SUPPLY AIR
SAN	SANITARY
SB	SPLASH BLOCK
SCHED	SCHEDULE(D)
SE	SEALANT
SECT	SECTION
SG	SNOW GUARD
SHR	SHOWER
SHT	SHEET
SHTHG	SHEATHING
SIM	SIMILAR
SKC PLAS	BONDED GYPSUM SKIM COAT PLASTER
SLDG	SLIDE / SLIDING
SMR	SHEET METAL ROOFING
SPC	SYNTHETIC POLYMER COUNTERTOP
SPEC	SPECIFICATION(S)
SQ	SQUARE
SQ FT	SQUARE FOOT / FEET
SSM	SOLID SURFACE MATERIAL
SS	STAINLESS STEEL
ST	STONE
STC	SOUND TRANSMISSION CLASS
STD	STANDARD
STL	STEEL
STOR	STORAGE
STRUCT	STRUCTURE / STRUCTURAL
SURF MTD	SURFACE MOUNTED
SUSP	SUSPEND(ED) / SUSPENSION
SWBD	SWITCHBOARD
SYMM	SYMMETRICAL
T	TREAD
T/	TOP OF
TA	TOILET ACCESSORY(IES)
TC	TRAFFIC COATING
TD	TRENCH DRAIN
TEL	TELEPHONE
TEMP	TEMPERATURE
TER	TERRAZZO
THK	THICK(NESS)
THRES	THRESHOLD
TOC	TOP OF CURB
TOPO	TOPOGRAPHY MAP
TRANS	TRANSOM
TRAV	TRAVERTINE
TV	TELEVISION
TYP	TYPICAL
UC	UNDERCUT
UNFIN	UNFINISHED
UNO	UNLESS NOTED OTHERWISE
UPS	UNINTERRUPTED POWER SUPPLY
VAC	VACUUM
VERT	VERTICAL
VEST	VESTIBULE
VIF	VERIFY IN FIELD
VNR	VENEER
VNR PLAS	VENEER PLASTER
VOL	VOLUME
W/	WITH
W/O	WITHOUT
WB	WOOD BASE
WBL	WOOD BLOCKING
WCV	WALL COVERING
WD	WOOD
WDF	WOOD DOOR AND FRAME
WH	WALL HYDRANT
WI	WROUGHT IRON
WKP	WALKWAY PADS
WP	WORK POINT
WPMU	WATERPROOF MEMBRANE/UNDERLAYMENT
WPS	WATERPROOFING SYSTEM
WR	WEATHER RESISTANT
WRB	WARDROBE
WS	WEATHERSTRIP(PING)
WT	WEIGHT
WTR	WINDOW TREATMENT
WV	WOOD VENEER
WWF	WELDED WIRE FABRIC

DESIGN BY:										
DRAWN BY:		4	7/3/2023	ISSUED FOR BID						
CHECKED BY:										
APPROVED BY:		0	9/9/2022	ISSUED FOR PERMIT	MN	KH	SD			
CDOT/APPROVED BY:		NO.	DATE	REVISIONS	DES.	DRW.	CHK.	DCCO	CDOT	

TRANSYSTEMS
222 SOUTH RIVERSIDE PLAZA SUITE 610
CHICAGO, ILLINOIS 60606

SKIDMORE, OWINGS & MERRILL LLP
224 SOUTH MICHIGAN AVENUE, SUITE 1000
CHICAGO, ILLINOIS 60604

CHICAGO DEPARTMENT OF TRANSPORTATION
DIVISION OF ENGINEERING

STATE / LAKE LOOP ELEVATED STATION
200 NORTH STATE STREET, CHICAGO, IL 60601

SPEC. NO.

SYMBOLS & ABBREVIATIONS

DRAWING NO. A-001

CDOT PROJECT D-1-209

DATE: 9/9/2022

REVISION NO.

TYPICAL MOUNTING HEIGHTS

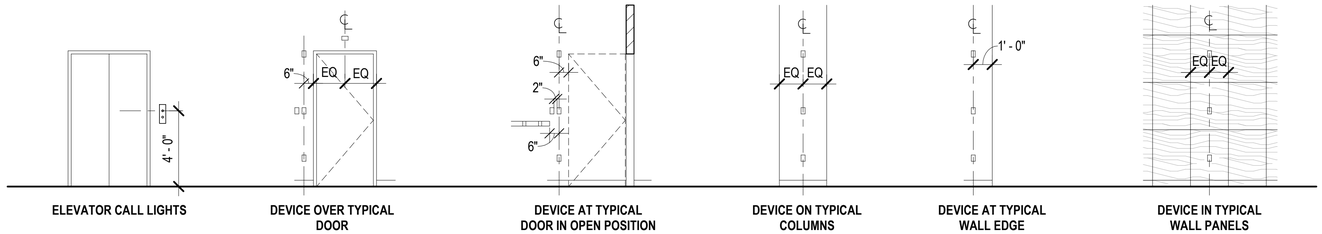

ELEVATOR CALL LIGHTS | DEVICE OVER TYPICAL DOOR | DEVICE AT TYPICAL DOOR IN OPEN POSITION | DEVICE ON TYPICAL COLUMNS | DEVICE AT TYPICAL WALL EDGE | DEVICE IN TYPICAL WALL PANELS

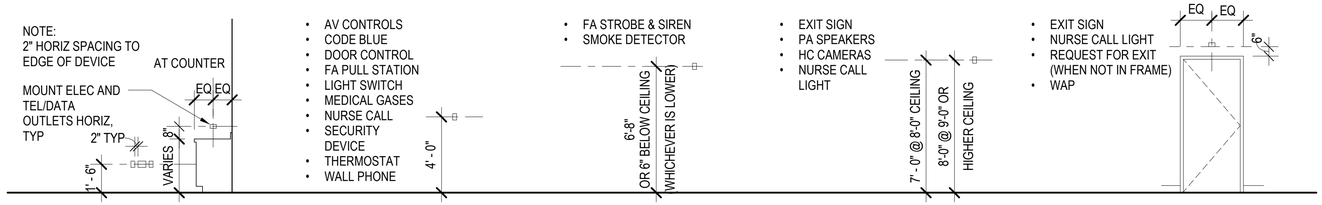

ELECTRICAL/ IT DEVICE | DEVICES AS INDICATED | DEVICE AS INDICATED MOUNTED OVER DOOR

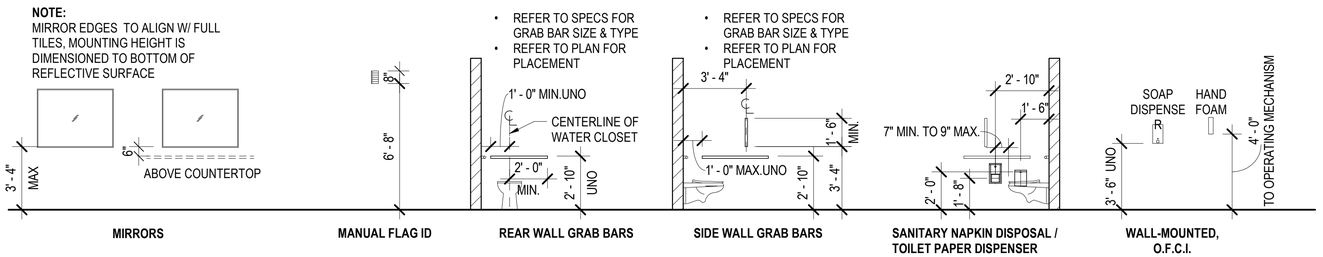

MIRRORS | MANUAL FLAG ID | REAR WALL GRAB BARS | SIDE WALL GRAB BARS | SANITARY NAPKIN DISPOSAL / TOILET PAPER DISPENSER | WALL-MOUNTED, O.F.C.I.

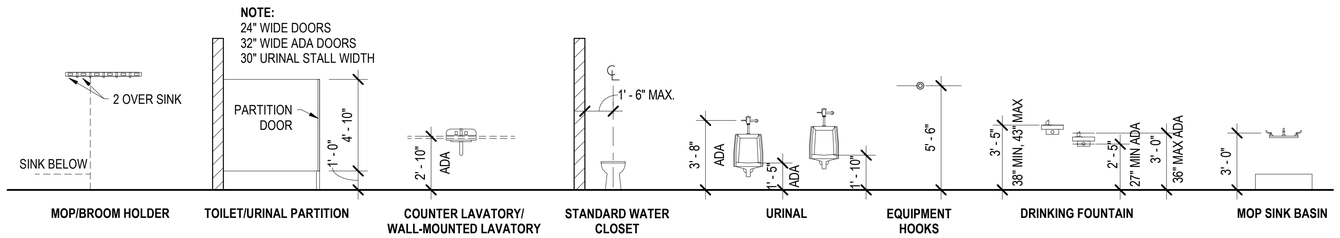

MOP/BROOM HOLDER | TOILET/URINAL PARTITION | COUNTER LAVATORY/ WALL-MOUNTED LAVATORY | STANDARD WATER CLOSET | URINAL | EQUIPMENT HOOKS | DRINKING FOUNTAIN | MOP SINK BASIN

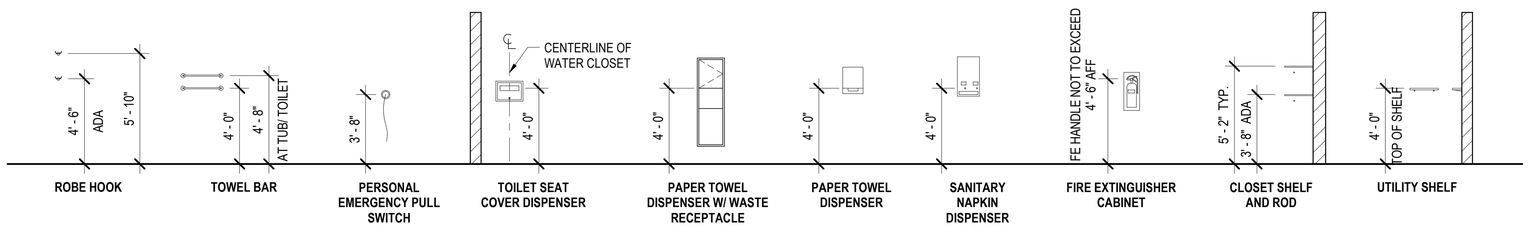

ROBE HOOK | TOWEL BAR | PERSONAL EMERGENCY PULL SWITCH | TOILET SEAT COVER DISPENSER | PAPER TOWEL DISPENSER W/ WASTE RECEPTACLE | PAPER TOWEL DISPENSER | SANITARY NAPKIN DISPENSER | FIRE EXTINGUISHER CABINET | CLOSET SHELF AND ROD | UTILITY SHELF

GLAZING NOTES

1. REFER TO SPECIFICATION SECTION 088000 FOR SPECIFIC DESCRIPTIONS & REQUIREMENTS
2. ALL GLASS WITHIN 9'-0" AFF TO HAVE (2) PLIES OF SACRIFICIAL SECURITY FILM APPLIED TO ALL SIDES ACCESSIBLE BY THE PUBLIC. COVER ENTIRE PANEL. DO NOT COVER PARTIAL PANELS.
3. SEE A-512 FOR CUSTOM PATTERN DEFINITIONS
4. ALL EXPOSED GLAZING EDGES TO BE MACHINE GROUND AND FLAT POLISHED

GLAZING TYPES

GL-1A SLOPED GLAZING AT DOME, VAULT CANOPY ABOVE HIGH GUTTER, FLYOVER & GLAZED STAIR ROOFS
LOW-IRON, FULLY TEMPERED, LAMINATED GLASS
CLEAR W/ CERAMIC FRIT

GL-1B SLOPED GLAZING AT VAULT CANOPY BELOW HIGH GUTTER
LOW-IRON, FULLY TEMPERED, LAMINATED GLASS
CLEAR W/ TWO LAYERS OF SACRIFICIAL FILM AT INTERIOR

GL-2 VERTICAL GLAZING AT ABUTMENT ENCLOSURES
LOW-IRON, LAMINATED GLASS
CLEAR W/ TWO LAYERS OF SACRIFICIAL FILM AT EXTERIOR

GL-3 VERTICAL, TRANSLUCENT GLAZING AT ABUTMENT ENCLOSURES
LOW-IRON, LAMINATED GLASS
TRANSLUCENT W/ TWO LAYERS OF SACRIFICIAL FILM

GL-4 VERTICAL GLAZING AT ESCALATOR & STAIR ENCLOSURES INCLUDING BALUSTRADES
LOW-IRON, FULLY TEMPERED LAMINATED GLASS
CLEAR W/ TWO LAYERS OF SACRIFICIAL FILM AT EXTERIOR & INTERIOR

GL-5 SLOPED GLAZING AT HISTORIC CANOPY
LOW-IRON, FULLY TEMPERED, LAMINATED GLASS
CLEAR

GL-7 VERTICAL GLAZING AT PLATFORM WINDBREAKS
LOW-IRON, LAMINATED GLASS
CLEAR W/ TWO LAYERS OF SACRIFICIAL FILM AT EXTERIOR & INTERIOR

GL-8 GLAZING AT ELEVATOR CAB ENCLOSURE & DOORS
9/16" THK LAMINATED SAFETY GLASS

GL-9 SECURITY GLAZING AT CAK

PAINTING NOTES

1. REFER TO SPECIFICATION SECTION 099000 FOR SPECIFIC DESCRIPTIONS & REQUIREMENT
2. NEW STEEL TRACK AND PLATFORM SUPPORT STRUCTURES TO BE PAINTED PT-1 UNLESS OTHERWISE NOTED. PATCH AND REPAIR PAINT AT ADJACENT EXISTING STRUCTURE TO MATCH. EXPOSED CONDUIT, PIPES (BARE AND COVERED), AND HANGERS TO BE PAINTED.

PAINTING TYPES

PT-1 CITY OF CHICAGO BORDEAUX (TO MATCH SHERWIN WILLIAMS SW2717), GLOSS

PT-2 FEDERAL #27722 (CTA STANDARD WHITE), GLOSS

PT-3 TO MATCH SHERWIN WILLIAMS KENDALL CHARCOAL, GLOSS

PT-4 TO MATCH SHERWIN WILLIAMS KENDALL CHARCOAL, SEMI-GLOSS

OTHER MATERIALS

MP-1A METAL PANEL SYSTEM, ALUMINUM, PVDF FINISH, PAINT TO MATCH PT-2

MP-1B METAL PANEL SYSTEM, ALUMINUM, PVDF FINISH, PAINT TO MATCH PT-3

MP-2 METAL PANEL SYSTEM, STAINLESS STEEL

CT-1 CERAMIC TILE, 6X6 WHITE, HIGH GLOSS

GR-1A GRANITE, ROCKVILLE WHITE, DIAMOND 5 FINISH

GR-1B GRANITE, ROCKVILLE WHITE, DIAMOND 8 FINISH

GR-2A GRANITE, JET MIST, SANDBLASTED 1/4" DEPTH

GR-2B GRANITE, JET MIST, FLAMED

VWB-1 VINYL WALL BASE, COLOR TO MATCH ADJACENT WALL FINISH

EPF-1 EPOXY RESINOUS FLOORING, COLOR TO MATCH #411 SILVER BULLET

DESIGN BY:									
DRAWN BY:		4	7/3/2023	ISSUED FOR BID					
CHECKED BY:		1	11/4/2022	ISSUED FOR PERMIT REVISION 1					
APPROVED BY:		0	9/9/2022	ISSUED FOR PERMIT	MN	KH	SD		
CDOT/APPROVED BY:		NO.	DATE	REVISIONS	DES.	DRW.	CHK.	DCCO	CDOT

TRANSYSTEMS
222 SOUTH RIVERSIDE PLAZA SUITE 610
CHICAGO, ILLINOIS 60606

SKIDMORE, OWINGS & MERRILL LLP
224 SOUTH MICHIGAN AVENUE, SUITE 1000
CHICAGO, ILLINOIS 60604

CHICAGO DEPARTMENT OF TRANSPORTATION
DIVISION OF ENGINEERING

STATE / LAKE LOOP ELEVATED STATION

TYP MOUNTING HEIGHTS & MATERIAL LIST

CDOT PROJECT D-1-209 | DATE: 9/9/2022

SPEC. NO.

DRAWING NO. A-002

REVISION NO.1

Note:
The wind loads presented have been factored to be compatible with an Allowable Stress Design approach.

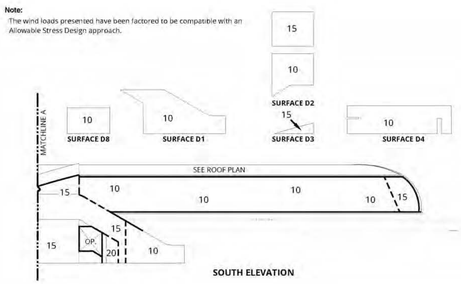

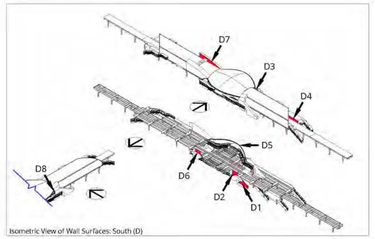

FLYOVER LEVEL
PLATFORM LEVEL
MEZZANINE LEVEL
STREET LEVEL

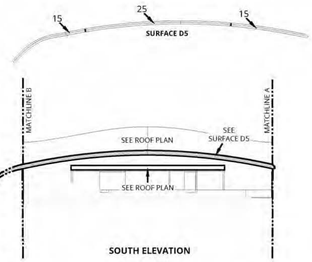

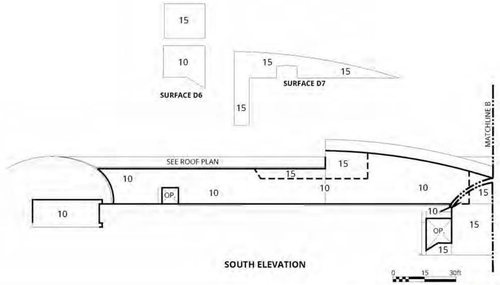

Recommended Wind Loads for Cladding Design (psf)
Peak Differential Positive Pressures
(Positive External Pressure with Negative Internal Pressure Where Applicable)
Basic Wind Speed = 114 mph (3-Second Gust), Risk Category III
State & Lake Elevated Station - Chicago, IL

Drawn by: DBB | Figure: 10
Approx. Scale: 1"=30'
Project #2100248 | Date Revised: Aug. 27, 2021

Note:
The wind loads presented have been factored to be compatible with an Allowable Stress Design approach.

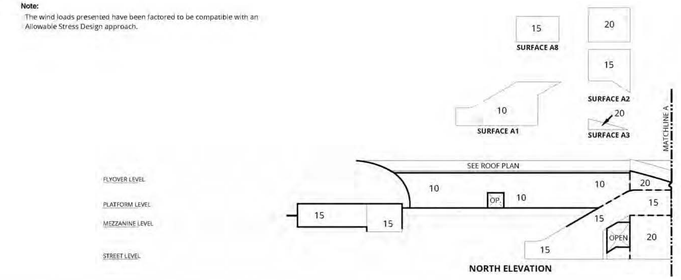

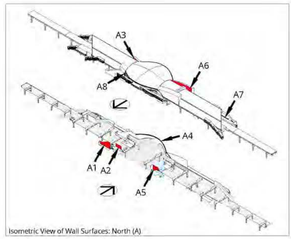

FLYOVER LEVEL
PLATFORM LEVEL
MEZZANINE LEVEL
STREET LEVEL

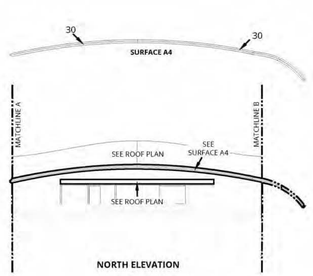

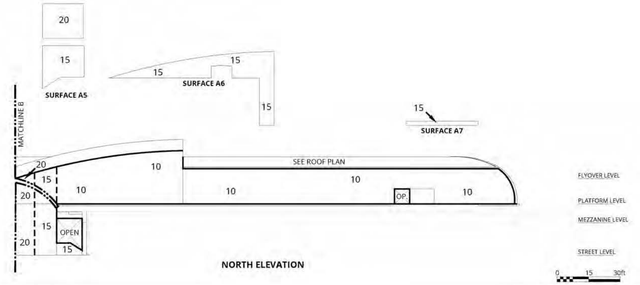

Recommended Wind Loads for Cladding Design (psf)
Peak Differential Positive Pressures
(Positive External Pressure with Negative Internal Pressure Where Applicable)
Basic Wind Speed = 114 mph (3-Second Gust), Risk Category III
State & Lake Elevated Station - Chicago, IL

Drawn by: DBB | Figure: 8
Approx. Scale: 1"=30'
Project #2100248 | Date Revised: Aug. 27, 2021

Note:
The wind loads presented have been factored to be compatible with an Allowable Stress Design approach.

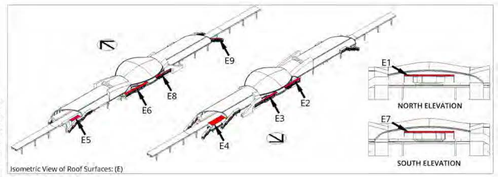

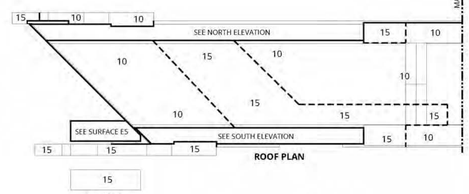

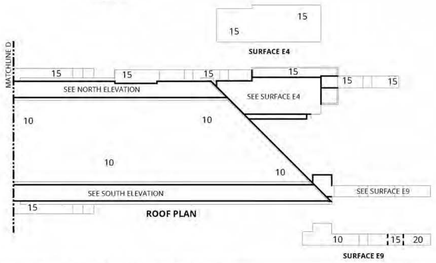

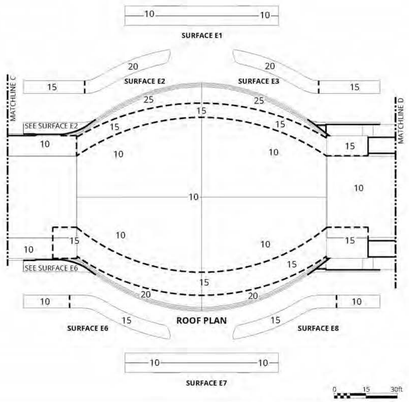

Recommended Wind Loads for Cladding Design (psf)
Peak Differential Positive Pressures
(Positive External Pressure with Negative Internal Pressure Where Applicable)
Basic Wind Speed = 114 mph (3-Second Gust), Risk Category III
State & Lake Elevated Station - Chicago, IL

True North
Drawn by: DBB | Figure: 11
Approx. Scale: 1"=30'
Project #2100248 | Date Revised: Aug. 27, 2021

Note:
The wind loads presented have been factored to be compatible with an Allowable Stress Design approach.

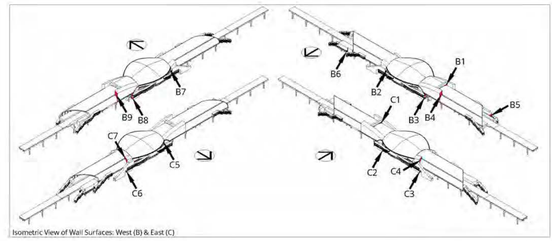

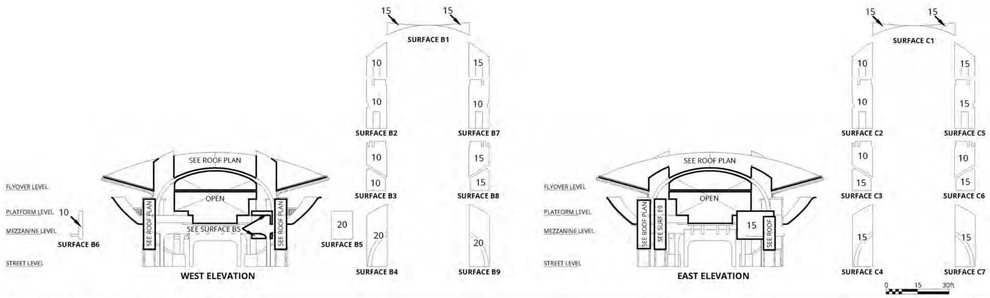

Recommended Wind Loads for Cladding Design (psf)
Peak Differential Positive Pressures
(Positive External Pressure with Negative Internal Pressure Where Applicable)
Basic Wind Speed = 114 mph (3-Second Gust), Risk Category III
State & Lake Elevated Station - Chicago, IL

Drawn by: DBB | Figure: 9
Approx. Scale: 1"=30'
Project #2100248 | Date Revised: Aug. 27, 2021

DESIGN BY:										
DRAWN BY:		4	7/3/2023	ISSUED FOR BID						
CHECKED BY:										
APPROVED BY:		0	9/9/2022	ISSUED FOR PERMIT	MN	KH	SD			
CDOT/APPROVED BY:		NO.	DATE	REVISIONS	DES.	DRW.	CHK.	DCCO	CDOT	

TranSystems
TRANSYSTEMS
222 SOUTH RIVERSIDE PLAZA SUITE 610
CHICAGO, ILLINOIS 60606

SOM
SKIDMORE, OWINGS & MERRILL LLP
224 SOUTH MICHIGAN AVENUE, SUITE 1000
CHICAGO, ILLINOIS 60604

CDOT
CHICAGO DEPARTMENT OF TRANSPORTATION
DIVISION OF ENGINEERING

STATE / LAKE LOOP ELEVATED STATION
200 NORTH STATE STREET, CHICAGO, IL 60601

WIND PRESSURE DIAGRAMS - POSITIVE PRESSURES

SPEC. NO.

DRAWING NO. A-004

CDOT PROJECT D-1-209 | DATE: 9/9/2022 | REVISION NO.

Note:
The wind loads presented have been factored to be compatible with an Allowable Stress Design approach.

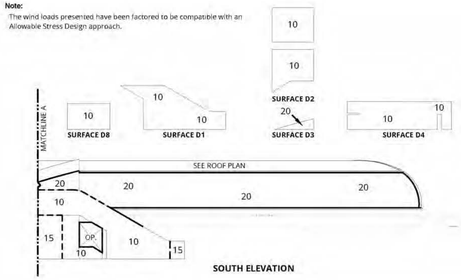

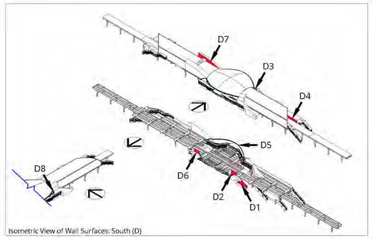

FLYOVER LEVEL
PLATFORM LEVEL
MEZZANINE LEVEL
STREET LEVEL

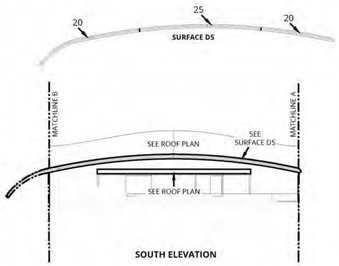

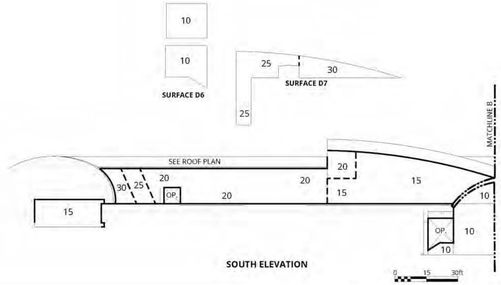

0 15 30ft

Recommended Wind Loads for Cladding Design (psf)
Peak Differential Negative Pressures
(Negative External Pressure with Positive Internal Pressure Where Applicable)
Basic Wind Speed = 114 mph (3-Second Gust), Risk Category III
State & Lake Elevated Station - Chicago, IL

Drawn by: DBB	Figure: 6
Approx. Scale:	1"=30'
Project #2100248	Date Revised: Aug. 27, 2021

Note:
The wind loads presented have been factored to be compatible with an Allowable Stress Design approach.

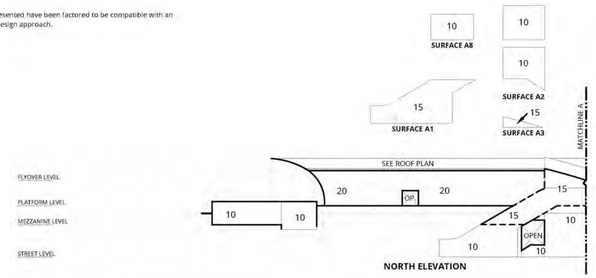

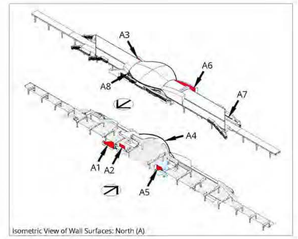

FLYOVER LEVEL
PLATFORM LEVEL
MEZZANINE LEVEL
STREET LEVEL

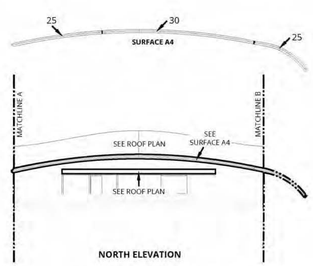

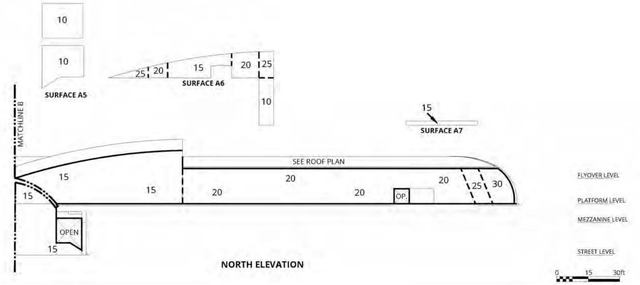

0 15 30ft

Recommended Wind Loads for Cladding Design (psf)
Peak Differential Negative Pressures
(Negative External Pressure with Positive Internal Pressure Where Applicable)
Basic Wind Speed = 114 mph (3-Second Gust), Risk Category III
State & Lake Elevated Station - Chicago, IL

Drawn by: DBB	Figure: 4
Approx. Scale:	1"=30'
Project #2100248	Date Revised: Aug. 27, 2021

Note:
The wind loads presented have been factored to be compatible with an Allowable Stress Design approach.

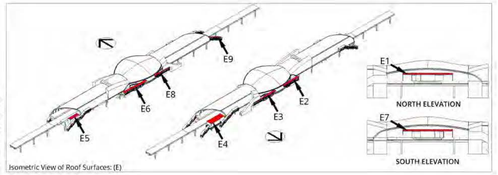

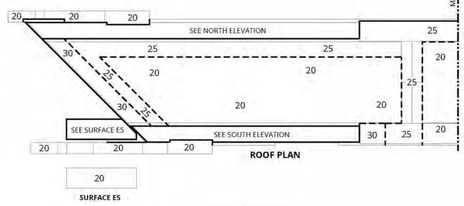

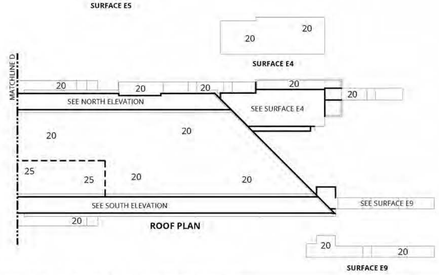

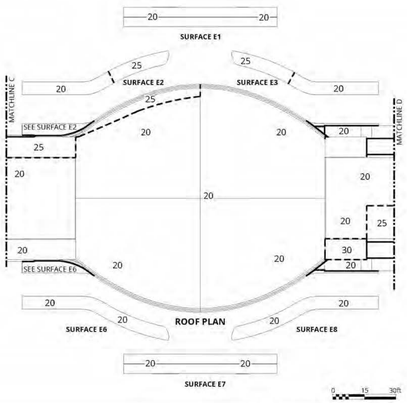

0 15 30ft

Recommended Wind Loads for Cladding Design (psf)
Peak Differential Negative Pressures
(Negative External Pressure with Positive Internal Pressure Where Applicable)
Basic Wind Speed = 114 mph (3-Second Gust), Risk Category III
State & Lake Elevated Station - Chicago, IL

True North

Drawn by: DBB	Figure: 7
Approx. Scale:	1"=30'
Project #2100248	Date Revised: Aug. 27, 2021

Note:
The wind loads presented have been factored to be compatible with an Allowable Stress Design approach.

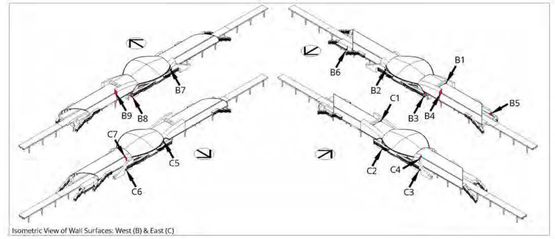

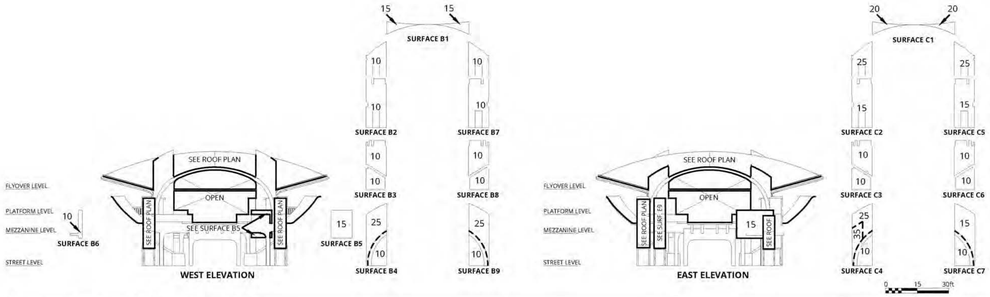

0 15 30ft

Recommended Wind Loads for Cladding Design (psf)
Peak Differential Negative Pressures
(Negative External Pressure with Positive Internal Pressure Where Applicable)
Basic Wind Speed = 114 mph (3-Second Gust), Risk Category III
State & Lake Elevated Station - Chicago, IL

Drawn by: DBB	Figure: 5
Approx. Scale:	1"=30'
Project #2100248	Date Revised: Aug. 27, 2021

DESIGN BY:										
DRAWN BY:		4	7/3/2023	ISSUED FOR BID						
CHECKED BY:										
APPROVED BY:		0	9/9/2022	ISSUED FOR PERMIT	MN	KH	SD			
CDOT/APPROVED BY:		NO.	DATE	REVISIONS	DES.	DRW.	CHK.	DCCO	CDOT	

TRANSYSTEMS
222 SOUTH RIVERSIDE PLAZA SUITE 610
CHICAGO, ILLINOIS 60606

SKIDMORE, OWINGS & MERRILL LLP
224 SOUTH MICHIGAN AVENUE, SUITE 1000
CHICAGO, ILLINOIS 60604

CHICAGO DEPARTMENT OF TRANSPORTATION
DIVISION OF ENGINEERING

STATE / LAKE LOOP ELEVATED STATION
200 NORTH STATE STREET, CHICAGO, IL 60601

SPEC. NO.

WIND PRESSURE DIAGRAMS - NEGATIVE PRESSURES

DRAWING NO. A-005

CDOT PROJECT D-1-209 | DATE: 9/9/2022 | REVISION NO.

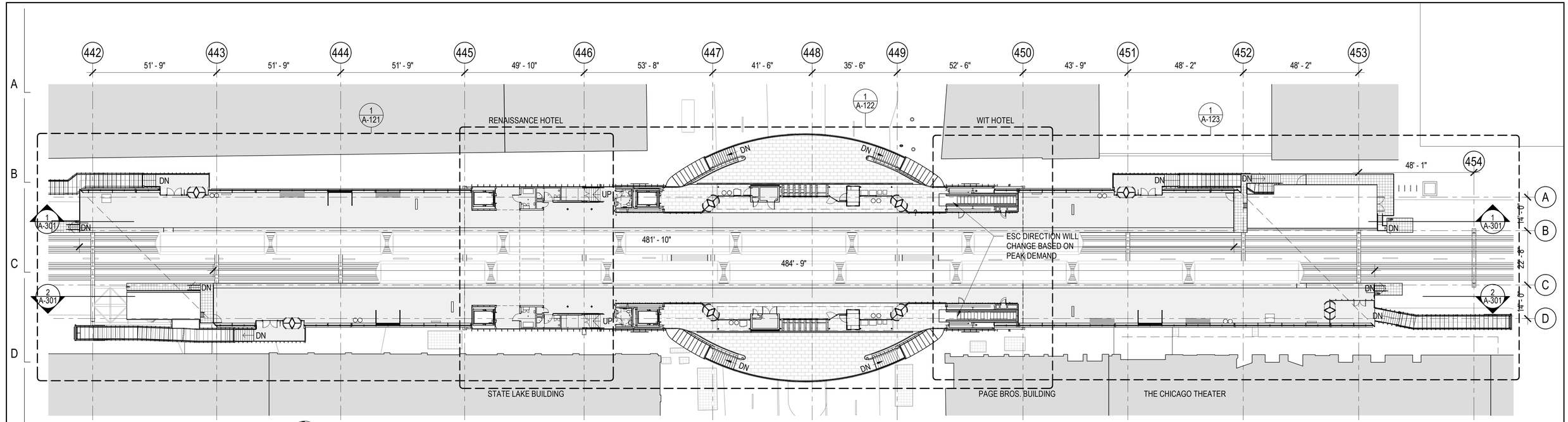

1 PLATFORM LEVEL PLAN
1" = 20'-0"

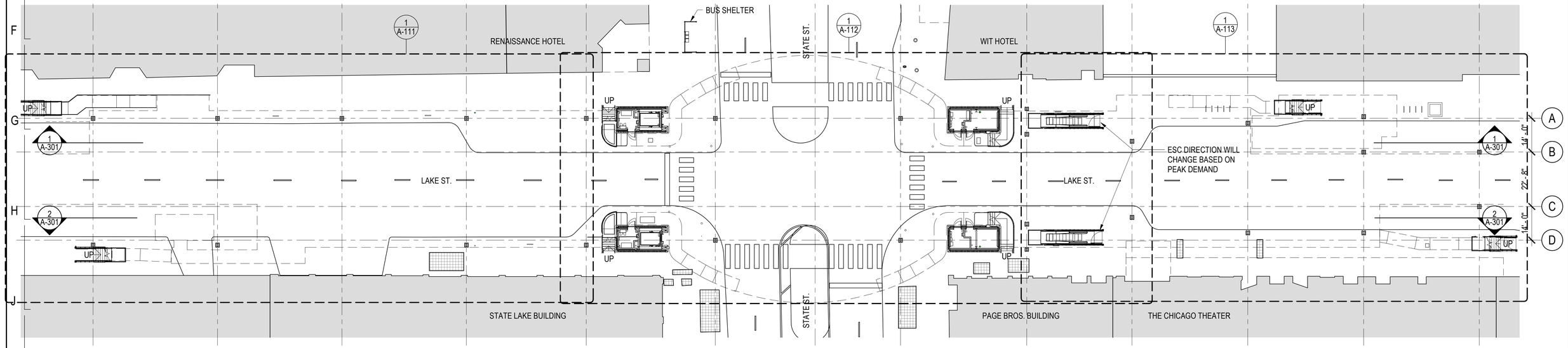

2 STREET LEVEL PLAN
1" = 20'-0"

DESIGN BY:									
DRAWN BY:		4	7/3/2023	ISSUED FOR BID					
CHECKED BY:		1	11/4/2022	ISSUED FOR PERMIT REVISION 1					
APPROVED BY:		0	9/9/2022	ISSUED FOR PERMIT	MN	KH	SD		
CDOT/APPROVED BY:		NO.	DATE	REVISIONS	DES.	DRW.	CHK.	DCCO	CDOT

TRANSYSTEMS
222 SOUTH RIVERSIDE PLAZA SUITE 610
CHICAGO, ILLINOIS 60606

SKIDMORE, OWINGS & MERRILL LLP
224 SOUTH MICHIGAN AVENUE, SUITE 1000
CHICAGO, ILLINOIS 60604

CHICAGO DEPARTMENT OF TRANSPORTATION
DIVISION OF ENGINEERING

STATE / LAKE LOOP ELEVATED STATION
200 NORTH STATE STREET, CHICAGO, IL 60601

SPEC. NO.

STREET LEVEL AND PLATFORM LEVEL PLANS

DRAWING NO. A-101

CDOT PROJECT D-1-209 | DATE: 9/9/2022 | REVISION NO.1

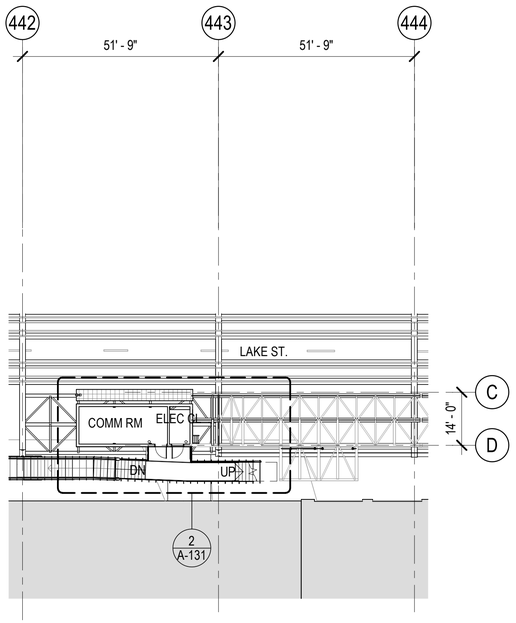

3 MEZZANINE PLAN - COMM RM

1" = 20'-0"

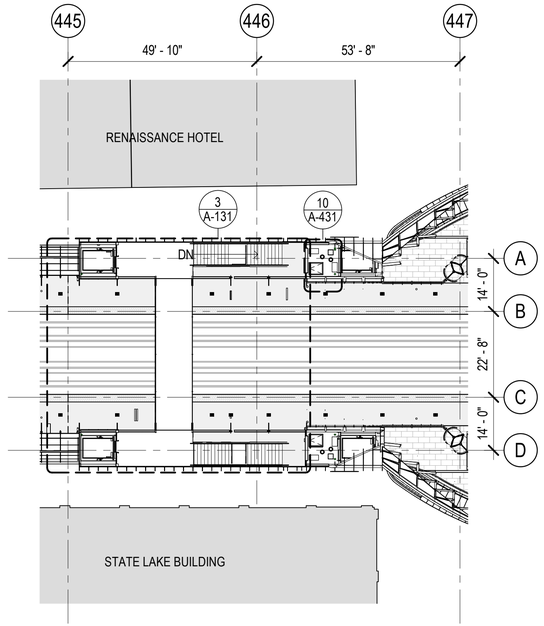

2 FLYOVER PLAN

1" = 20'-0"

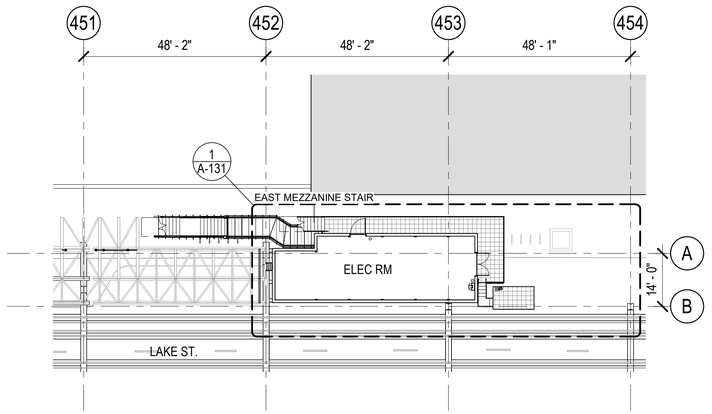

1 MEZZANINE PLAN - ELECTRICAL RM

1" = 20'-0"

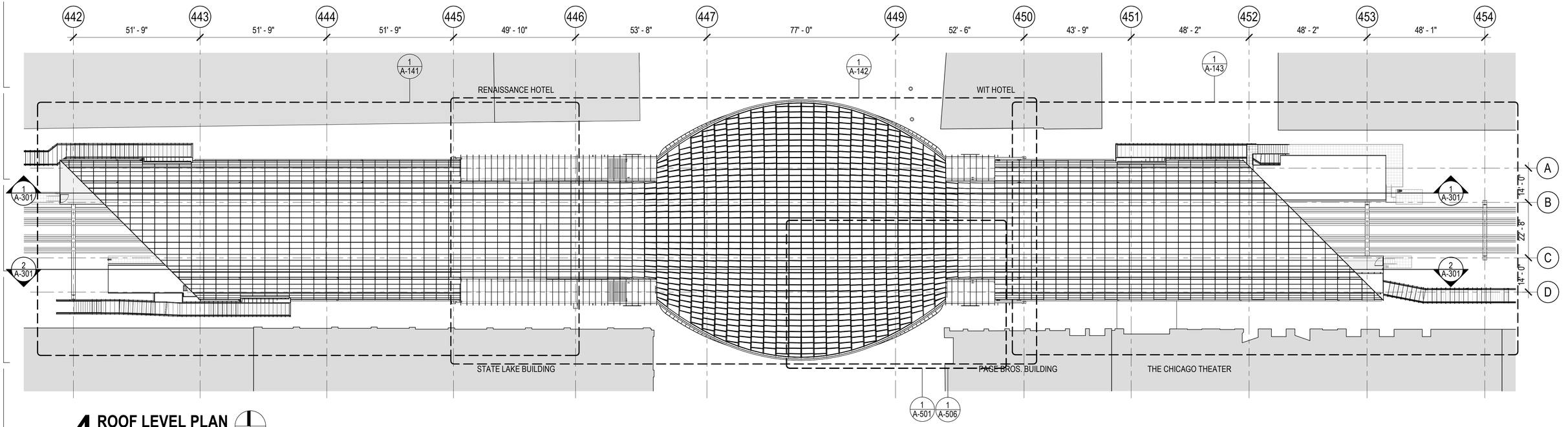

4 ROOF LEVEL PLAN

1" = 20'-0"

DESIGN BY:										
DRAWN BY:		4	7/3/2023	ISSUED FOR BID						
CHECKED BY:										
APPROVED BY:		0	9/9/2022	ISSUED FOR PERMIT	MN	KH	SD			
CDOT/APPROVED BY:		NO.	DATE	REVISIONS	DES.	DRW.	CHK.	DCCO	CDOT	

TRANSYSTEMS
222 SOUTH RIVERSIDE PLAZA SUITE 610
CHICAGO, ILLINOIS 60606

SKIDMORE, OWINGS & MERRILL LLP
224 SOUTH MICHIGAN AVENUE, SUITE 1000
CHICAGO, ILLINOIS 60604

CHICAGO DEPARTMENT
OF TRANSPORTATION
DIVISION OF ENGINEERING

STATE / LAKE LOOP ELEVATED STATION
200 NORTH STATE STREET, CHICAGO, IL 60601

SPEC. NO.

ROOF LEVEL MEZZ AND FLYOVER PLANS

DRAWING NO. A-102

CDOT PROJECT D-1-209

DATE: 9/9/2022

REVISION NO.

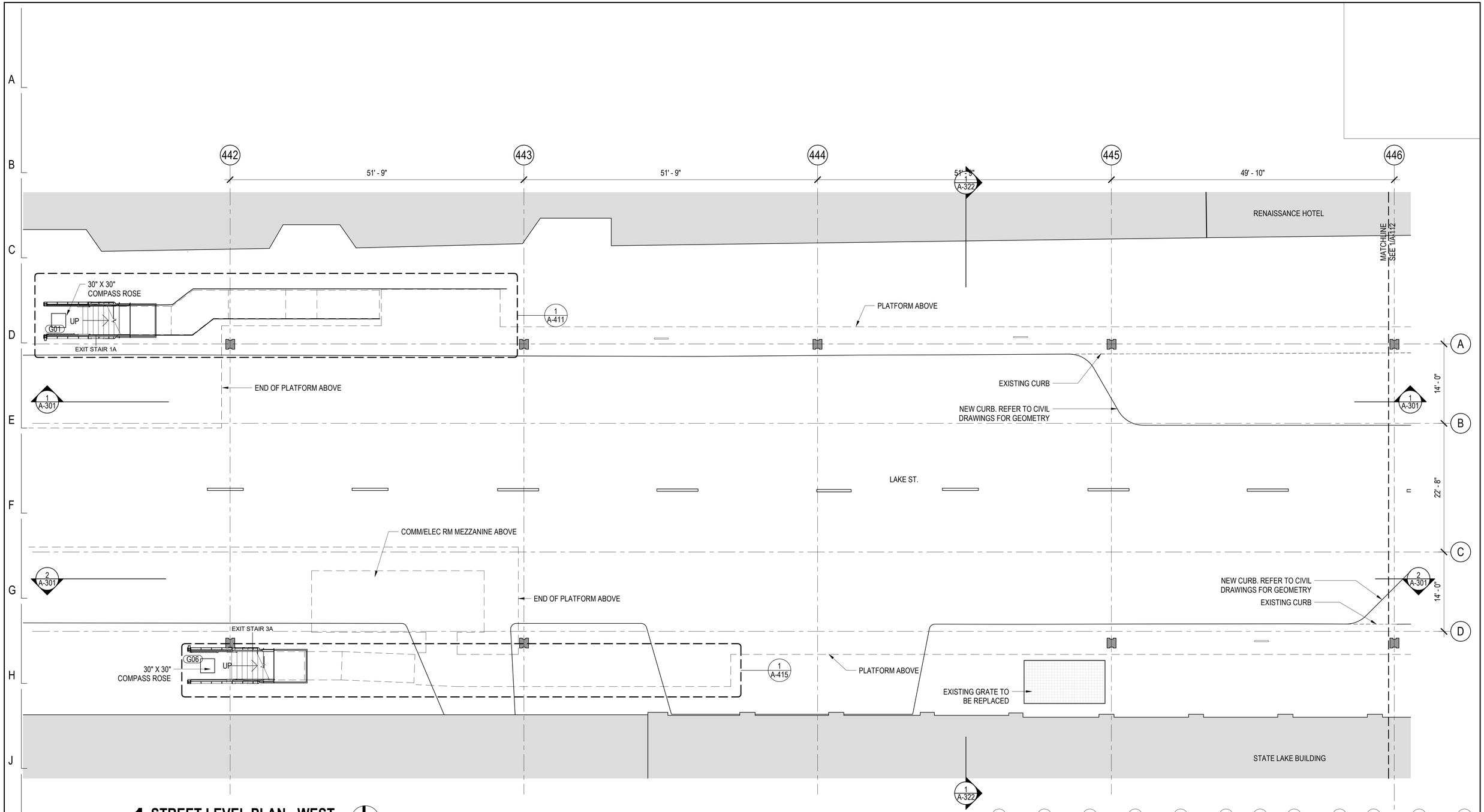

1 STREET LEVEL PLAN - WEST

1/8" = 1'-0"

DESIGN BY:										
DRAWN BY:		4	7/3/2023	ISSUED FOR BID						
CHECKED BY:										
APPROVED BY:		0	9/9/2022	ISSUED FOR PERMIT	MN	KH	SD			
CDOT/APPROVED BY:		NO.	DATE	REVISIONS	DES.	DRW.	CHK.	DCCO	CDOT	

TRANSYSTEMS
222 SOUTH RIVERSIDE PLAZA SUITE 610
CHICAGO, ILLINOIS 60606

SKIDMORE, OWINGS & MERRILL LLP
224 SOUTH MICHIGAN AVENUE, SUITE 1000
CHICAGO, ILLINOIS 60604

CHICAGO DEPARTMENT
OF TRANSPORTATION
DIVISION OF ENGINEERING

STATE / LAKE LOOP ELEVATED STATION
200 NORTH STATE STREET, CHICAGO, IL 60601

SPEC. NO.

ENLARGED STREET LEVEL PLAN - WEST

DRAWING NO.
A-111

CDOT PROJECT D-1-209

DATE: 9/9/2022

REVISION NO.

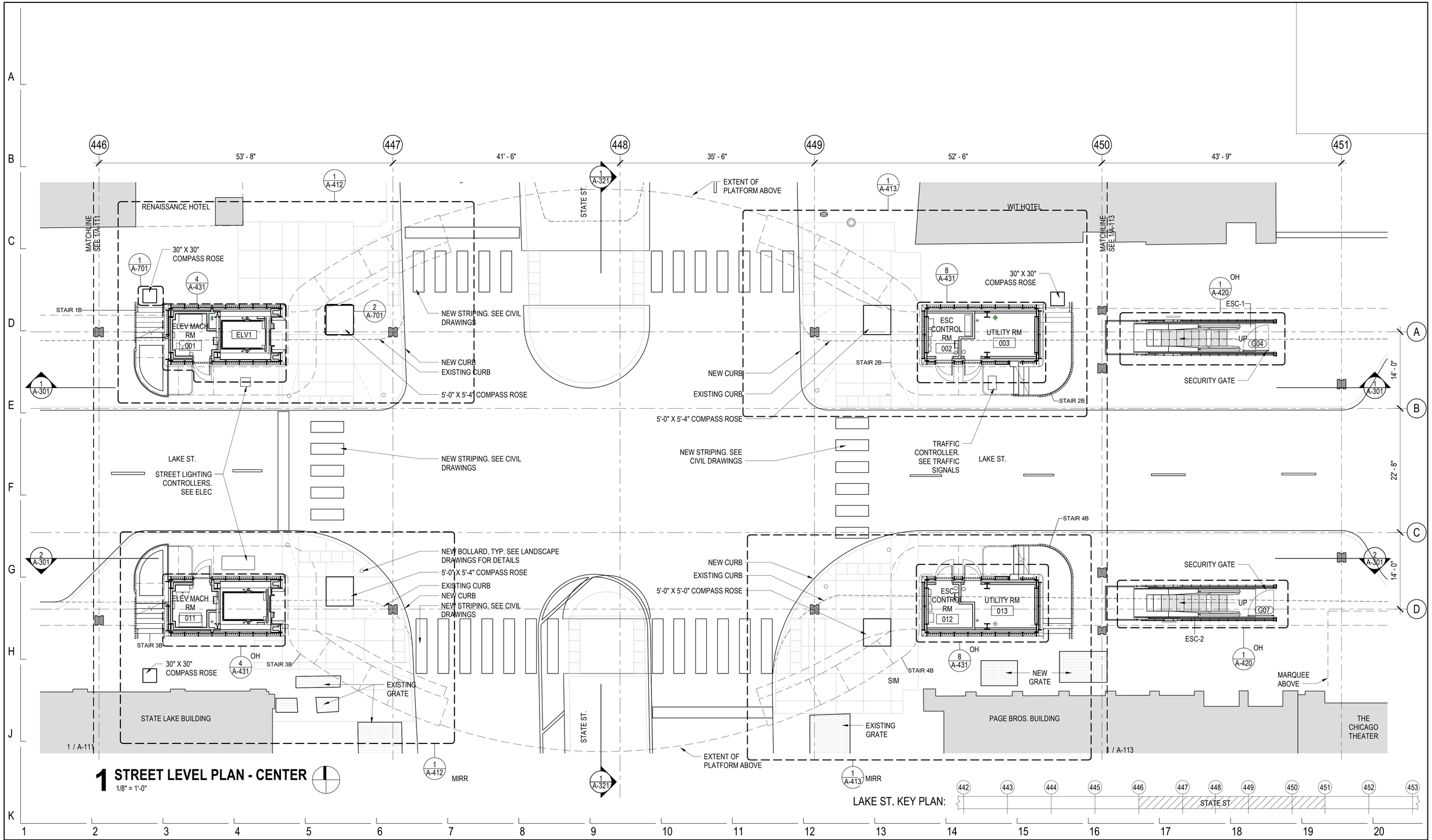

1 STREET LEVEL PLAN - CENTER

1/8" = 1'-0"

LAKE ST. KEY PLAN:

DESIGN BY:										
DRAWN BY:		4	7/3/2023	ISSUED FOR BID						
CHECKED BY:										
APPROVED BY:		0	9/9/2022	ISSUED FOR PERMIT	MN	KH	SD			
CDOT/APPROVED BY:		NO.	DATE	REVISIONS	DES.	DRW.	CHK.	DCCO	CDOT	

TRANSYSTEMS
222 SOUTH RIVERSIDE PLAZA SUITE 610
CHICAGO, ILLINOIS 60606

SKIDMORE, OWINGS & MERRILL LLP
224 SOUTH MICHIGAN AVENUE, SUITE 1000
CHICAGO, ILLINOIS 60604

CHICAGO DEPARTMENT OF TRANSPORTATION
DIVISION OF ENGINEERING

STATE / LAKE LOOP ELEVATED STATION
200 NORTH STATE STREET, CHICAGO, IL 60601

SPEC. NO.

ENLARGED STREET LEVEL PLAN - CENTER

DRAWING NO. A-112

CDOT PROJECT D-1-209 | DATE: 9/9/2022 | REVISION NO.

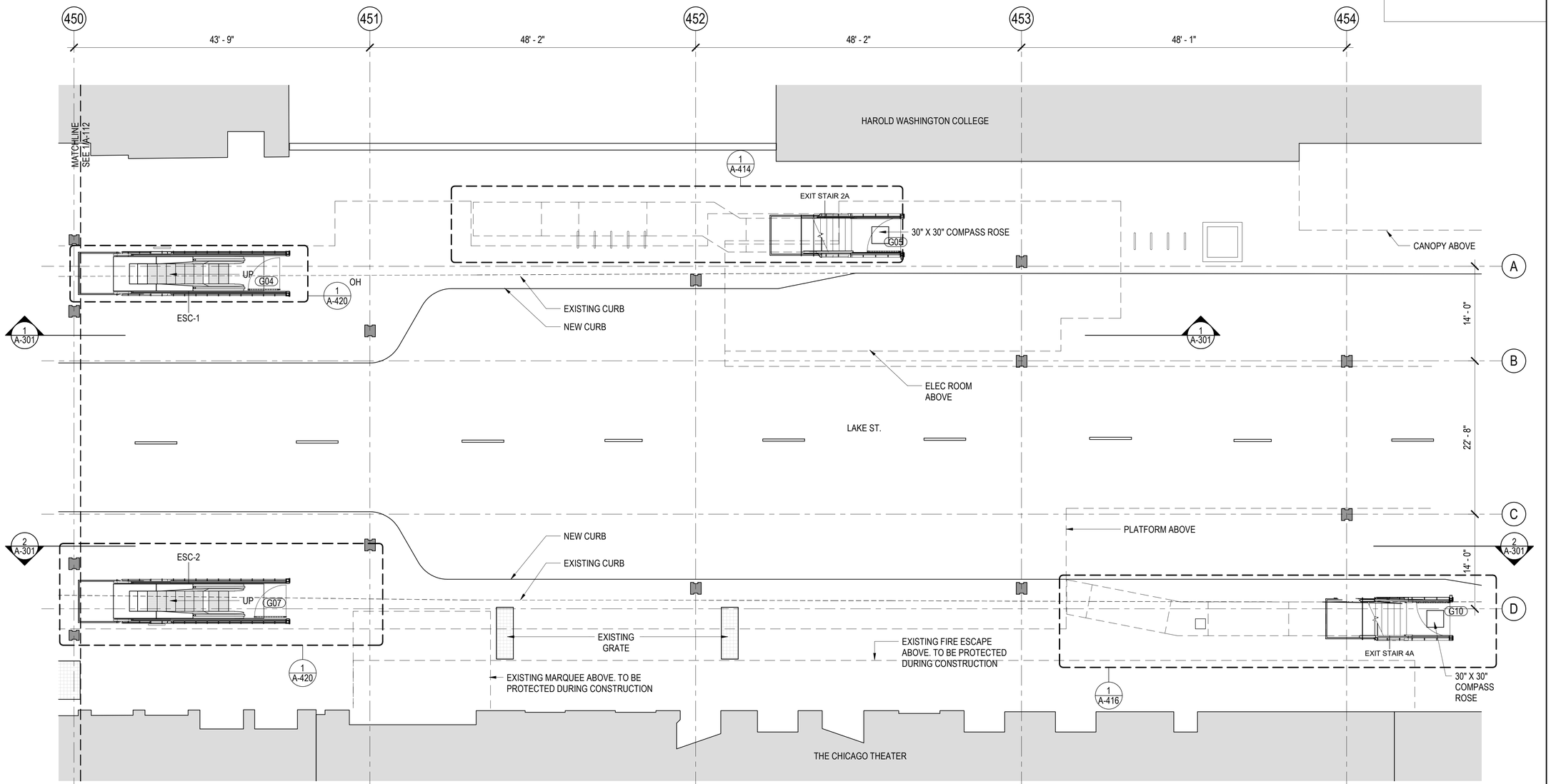

1 STREET LEVEL PLAN - EAST

1/8" = 1'-0"

LAKE ST. KEY PLAN:

DESIGN BY:									
DRAWN BY:		4	7/3/2023	ISSUED FOR BID					
CHECKED BY:									
APPROVED BY:		0	9/9/2022	ISSUED FOR PERMIT	MN	KH	SD		
CDOT/APPROVED BY:		NO.	DATE	REVISIONS	DES.	DRW.	CHK.	DCCO	CDOT

TRANSYSTEMS
222 SOUTH RIVERSIDE PLAZA SUITE 610
CHICAGO, ILLINOIS 60606

SKIDMORE, OWINGS & MERRILL LLP
224 SOUTH MICHIGAN AVENUE SUITE 1000
CHICAGO, ILLINOIS 60604

CHICAGO DEPARTMENT
OF TRANSPORTATION
DIVISION OF ENGINEERING

STATE / LAKE LOOP ELEVATED STATION
200 NORTH STATE STREET, CHICAGO, IL 60601

SPEC. NO.

ENLARGED STREET LEVEL PLAN - EAST

DRAWING NO.
A-113

CDOT PROJECT D-1-209

DATE: 9/9/2022

REVISION NO.

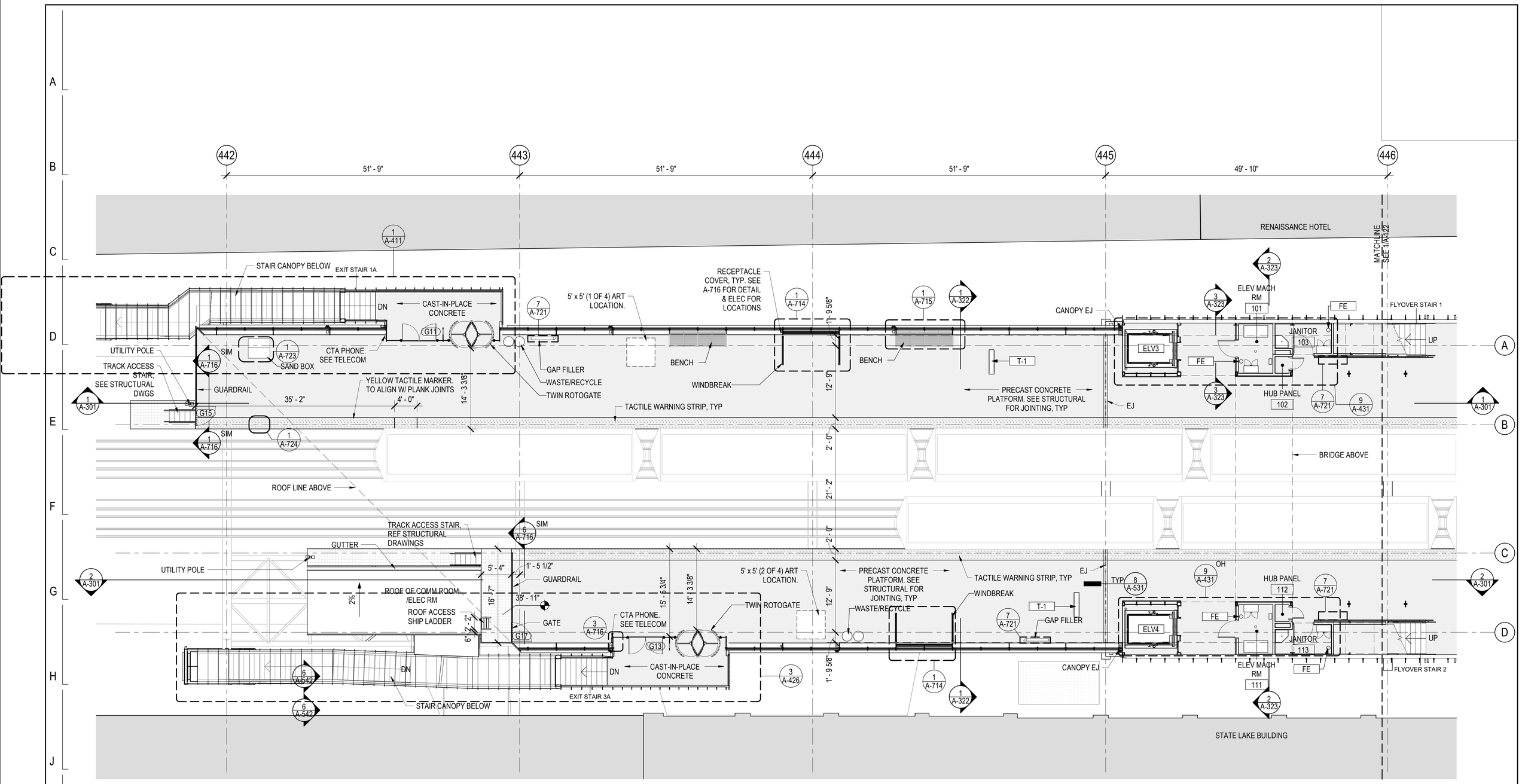

1 PLATFORM LEVEL PLAN - WEST

1/8" = 1'-0"

LAKE ST. KEY PLAN:

DESIGN BY:									
DRAWN BY:		4	7/3/2023	ISSUED FOR BID					
CHECKED BY:		1	11/4/2022	ISSUED FOR PERMIT REVISION 1					
APPROVED BY:		0	9/9/2022	ISSUED FOR PERMIT	MN	KH	SD		
CDOT/APPROVED BY:		NO.	DATE	REVISIONS	DES.	DRW.	CHK.	DCCO	CDOT

TRANSYSTEMS
222 SOUTH RIVERSIDE PLAZA SUITE 610
CHICAGO, ILLINOIS 60606

SKIDMORE, OWINGS & MERRILL LLP
224 SOUTH MICHIGAN AVENUE, SUITE 1000
CHICAGO, ILLINOIS 60604

CHICAGO DEPARTMENT OF TRANSPORTATION
DIVISION OF ENGINEERING

STATE / LAKE LOOP ELEVATED STATION
200 NORTH STATE STREET, CHICAGO, IL 60601

SPEC. NO.

ENLARGED PLATFORM LEVEL PLAN - WEST

DRAWING NO. A-121

CDOT PROJECT D-1-209 | DATE: 9/9/2022 | REVISION NO.1

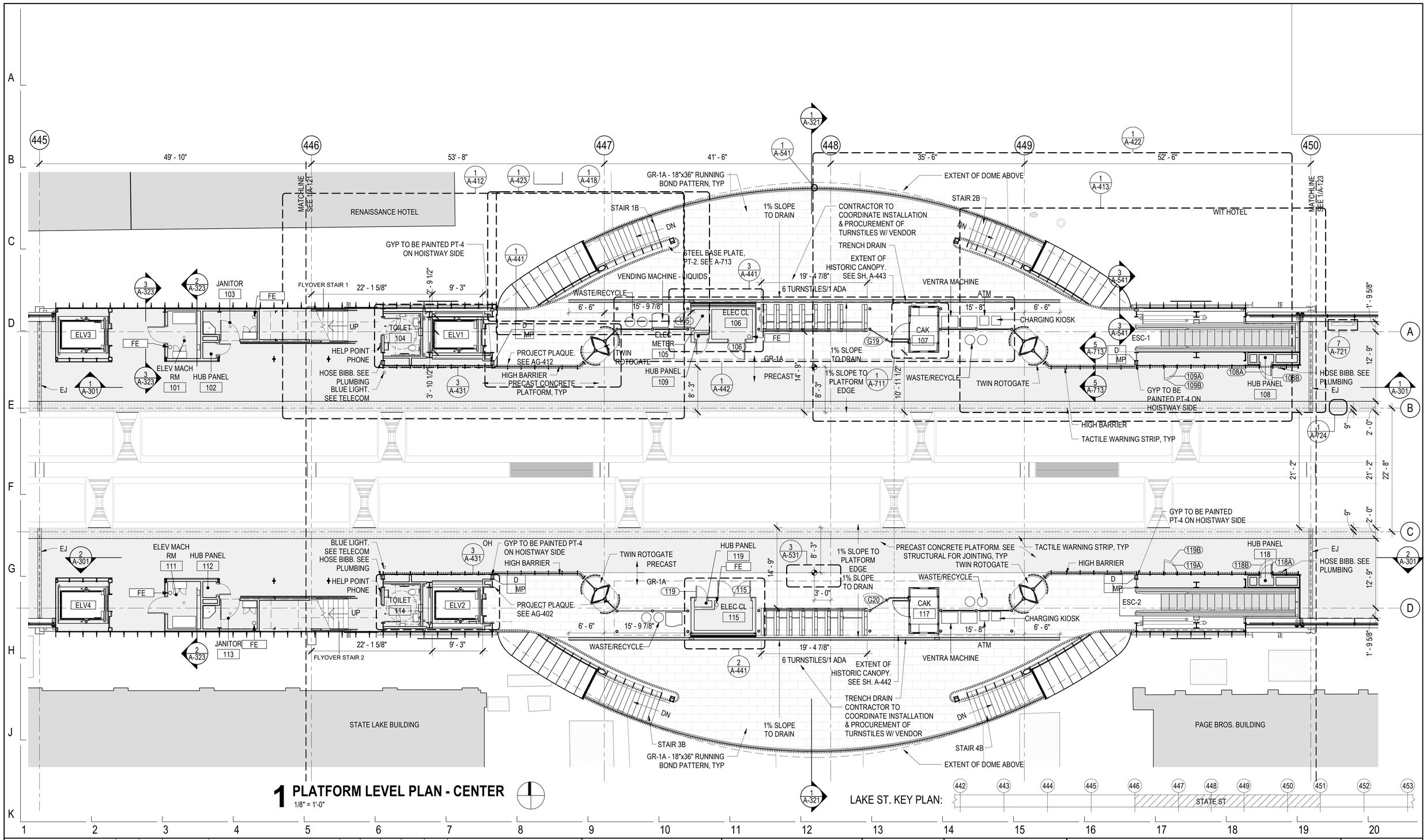

1 PLATFORM LEVEL PLAN - CENTER

1/8" = 1'-0"

DESIGN BY:									
DRAWN BY:		4	7/3/2023	ISSUED FOR BID					
CHECKED BY:		1	11/4/2022	ISSUED FOR PERMIT REVISION 1					
APPROVED BY:		0	9/9/2022	ISSUED FOR PERMIT	MN	KH	SD		
CDOT/APPROVED BY:		NO.	DATE	REVISIONS	DES.	DRW.	CHK.	DCCO	CDOT

TRANSYSTEMS
222 SOUTH RIVERSIDE PLAZA SUITE 610
CHICAGO, ILLINOIS 60606

SKIDMORE, OWINGS & MERRILL LLP
224 SOUTH MICHIGAN AVENUE, SUITE 1000
CHICAGO, ILLINOIS 60604

CHICAGO DEPARTMENT OF TRANSPORTATION
DIVISION OF ENGINEERING

STATE / LAKE LOOP ELEVATED STATION
200 NORTH STATE STREET, CHICAGO, IL 60601

SPEC. NO.

ENLARGED PLATFORM LEVEL PLAN - CENTER

DRAWING NO. A-122

CDOT PROJECT D-1-209 | DATE: 9/9/2022 | REVISION NO.1

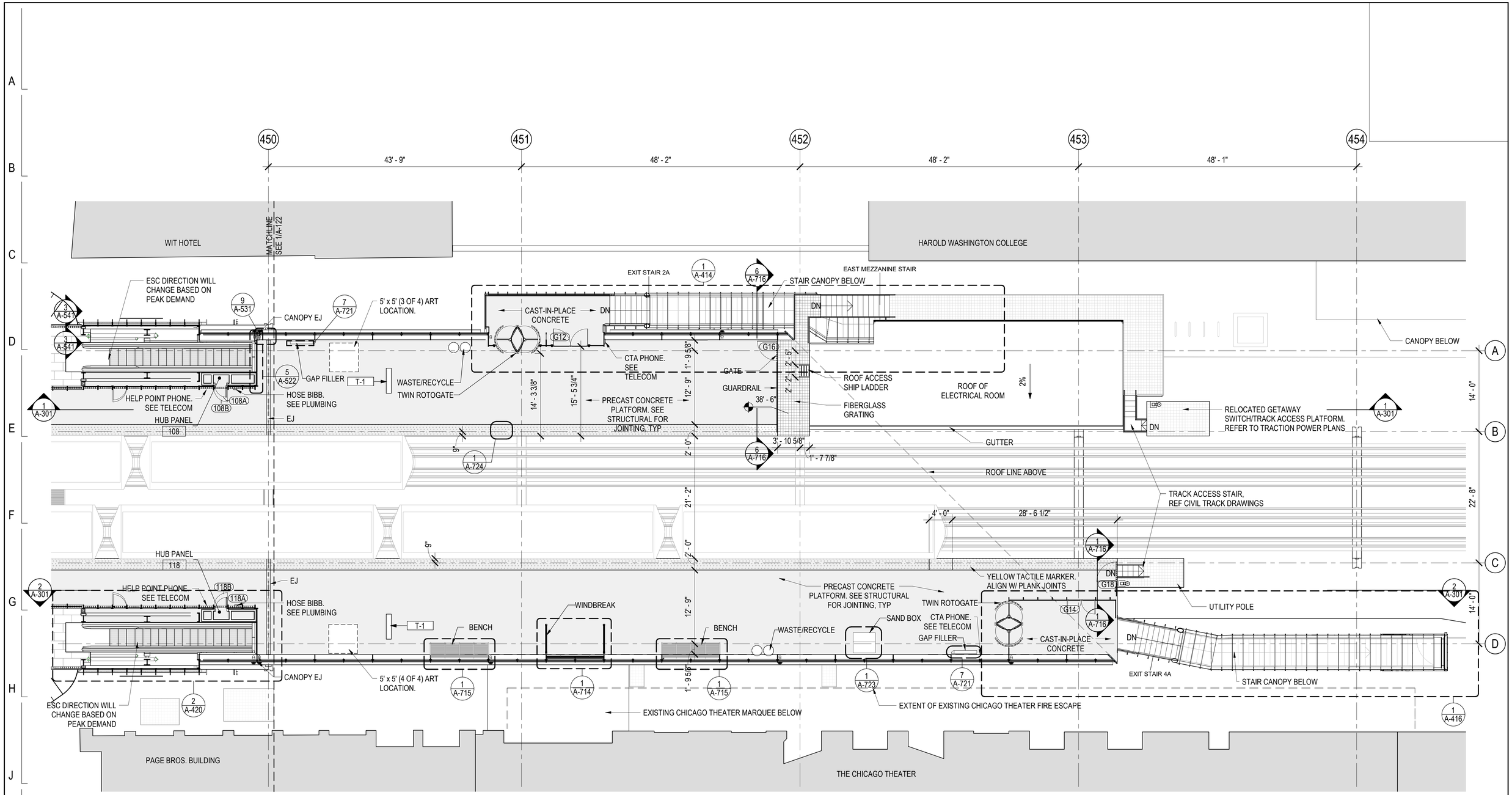

1 PLATFORM LEVEL PLAN - EAST

1/8" = 1'-0"

LAKE ST. KEY PLAN:

DESIGN BY:									
DRAWN BY:		4	7/3/2023	ISSUED FOR BID					
CHECKED BY:		1	11/4/2022	ISSUED FOR PERMIT REVISION 1					
APPROVED BY:		0	9/9/2022	ISSUED FOR PERMIT	MN	KH	SD		
CDOT/APPROVED BY:		NO.	DATE	REVISIONS	DES.	DRW.	CHK.	DCCO	CDOT

TRANSYSTEMS
222 SOUTH RIVERSIDE PLAZA SUITE 610
CHICAGO, ILLINOIS 60606

SKIDMORE, OWINGS & MERRILL LLP
224 SOUTH MICHIGAN AVENUE, SUITE 1000
CHICAGO, ILLINOIS 60604

CHICAGO DEPARTMENT OF TRANSPORTATION
DIVISION OF ENGINEERING

STATE / LAKE LOOP ELEVATED STATION
200 NORTH STATE STREET, CHICAGO, IL 60601

SPEC. NO.

ENLARGED PLATFORM LEVEL PLAN - EAST

DRAWING NO. A-123

CDOT PROJECT D-1-209

DATE: 9/9/2022

REVISION NO.1

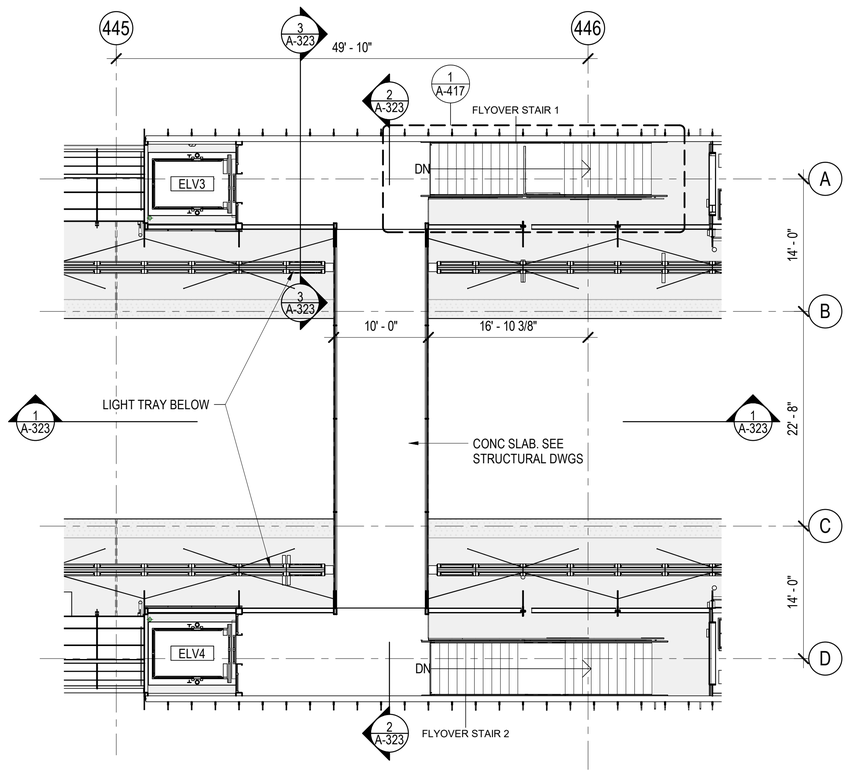

3 FLYOVER LEVEL - FLYOVER

1/8" = 1'-0"

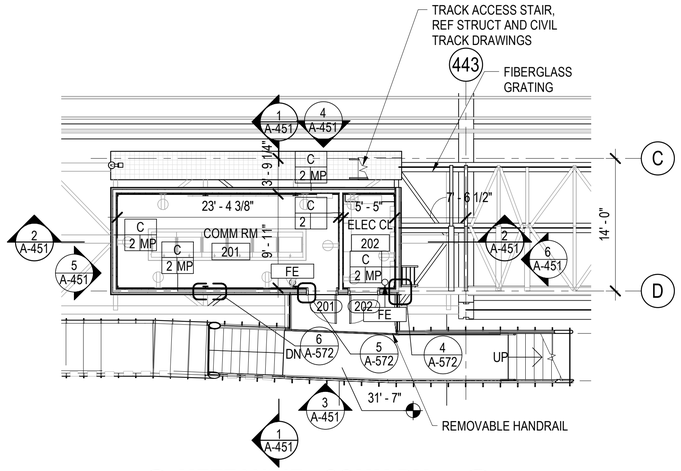

2 MEZZANINE - COMM RM

1/8" = 1'-0"

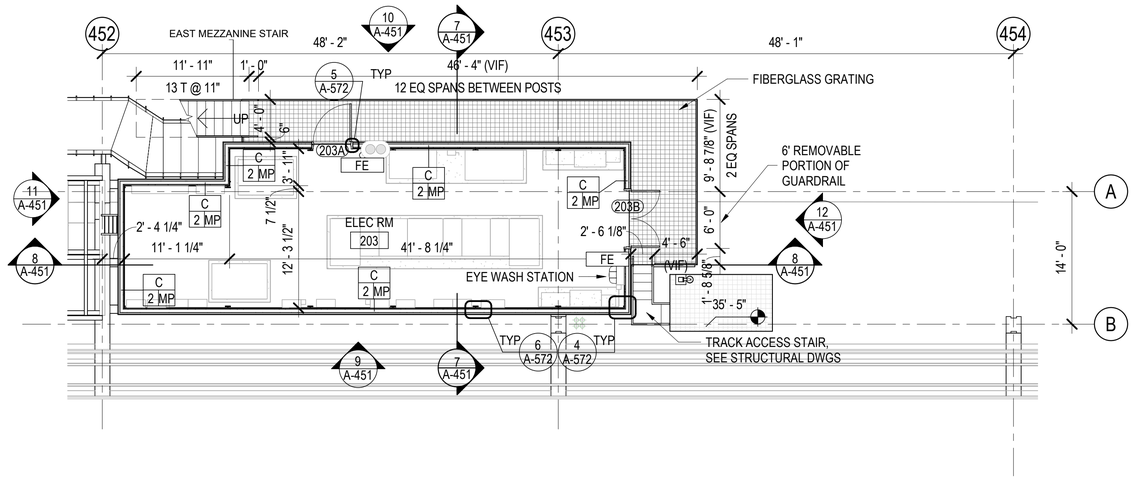

1 MEZZANINE - ELEC RM

1/8" = 1'-0"

DESIGN BY:										
DRAWN BY:		4	7/3/2023	ISSUED FOR BID						
CHECKED BY:										
APPROVED BY:		0	9/9/2022	ISSUED FOR PERMIT	MN	KH	SD			
CDOT/APPROVED BY:		NO.	DATE	REVISIONS	DES.	DRW.	CHK.	DCCO	CDOT	

TRANSYSTEMS
222 SOUTH RIVERSIDE PLAZA SUITE 610
CHICAGO, ILLINOIS 60606

SKIDMORE, OWINGS & MERRILL LLP
224 SOUTH MICHIGAN AVENUE, SUITE 1000
CHICAGO, ILLINOIS 60604

CHICAGO DEPARTMENT OF TRANSPORTATION
DIVISION OF ENGINEERING

STATE / LAKE LOOP ELEVATED STATION
200 NORTH STATE STREET, CHICAGO, IL 60601

SPEC. NO.

ENLARGED MEZZ AND FLYOVER PLANS

DRAWING NO. A-131

CDOT PROJECT D-1-209

DATE: 9/9/2022

REVISION NO.

NOTE: SEE A-002 FOR GLASS TYPE DESCRIPTIONS & LOCATIONS

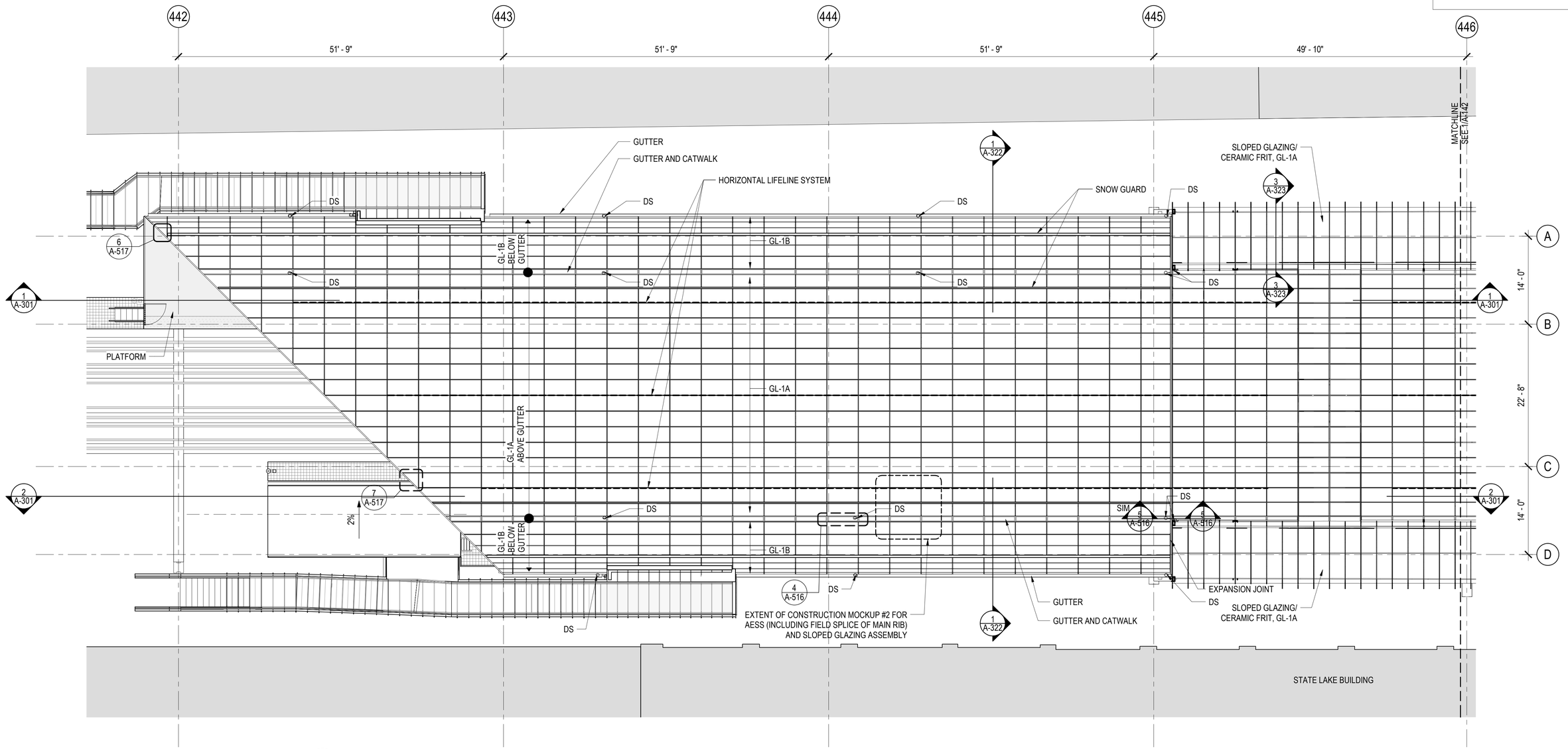

1 ROOF PLAN - WEST

1/8" = 1'-0"

LAKE ST. KEY PLAN:

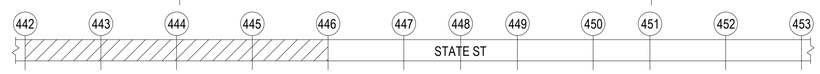

DESIGN BY:									
DRAWN BY:		4	7/3/2023	ISSUED FOR BID					
CHECKED BY:		1	11/4/2022	ISSUED FOR PERMIT REVISION 1					
APPROVED BY:		0	9/9/2022	ISSUED FOR PERMIT	MN	KH	SD		
CDOT/APPROVED BY:		NO.	DATE	REVISIONS	DES.	DRW.	CHK.	DCCO	CDOT

TRANSYSTEMS
222 SOUTH RIVERSIDE PLAZA SUITE 610
CHICAGO, ILLINOIS 60606

SKIDMORE, OWINGS & MERRILL LLP
224 SOUTH MICHIGAN AVENUE, SUITE 1000
CHICAGO, ILLINOIS 60604

CHICAGO DEPARTMENT
OF TRANSPORTATION
DIVISION OF ENGINEERING

STATE / LAKE LOOP ELEVATED STATION
200 NORTH STATE STREET, CHICAGO, IL 60601

SPEC. NO.

ENLARGED ROOF LEVEL PLAN - WEST

DRAWING NO.
A-141

CDOT PROJECT D-1-209

DATE: 9/9/2022

REVISION NO.1

NOTE: SEE A-002 FOR GLASS TYPE DESCRIPTIONS & LOCATIONS

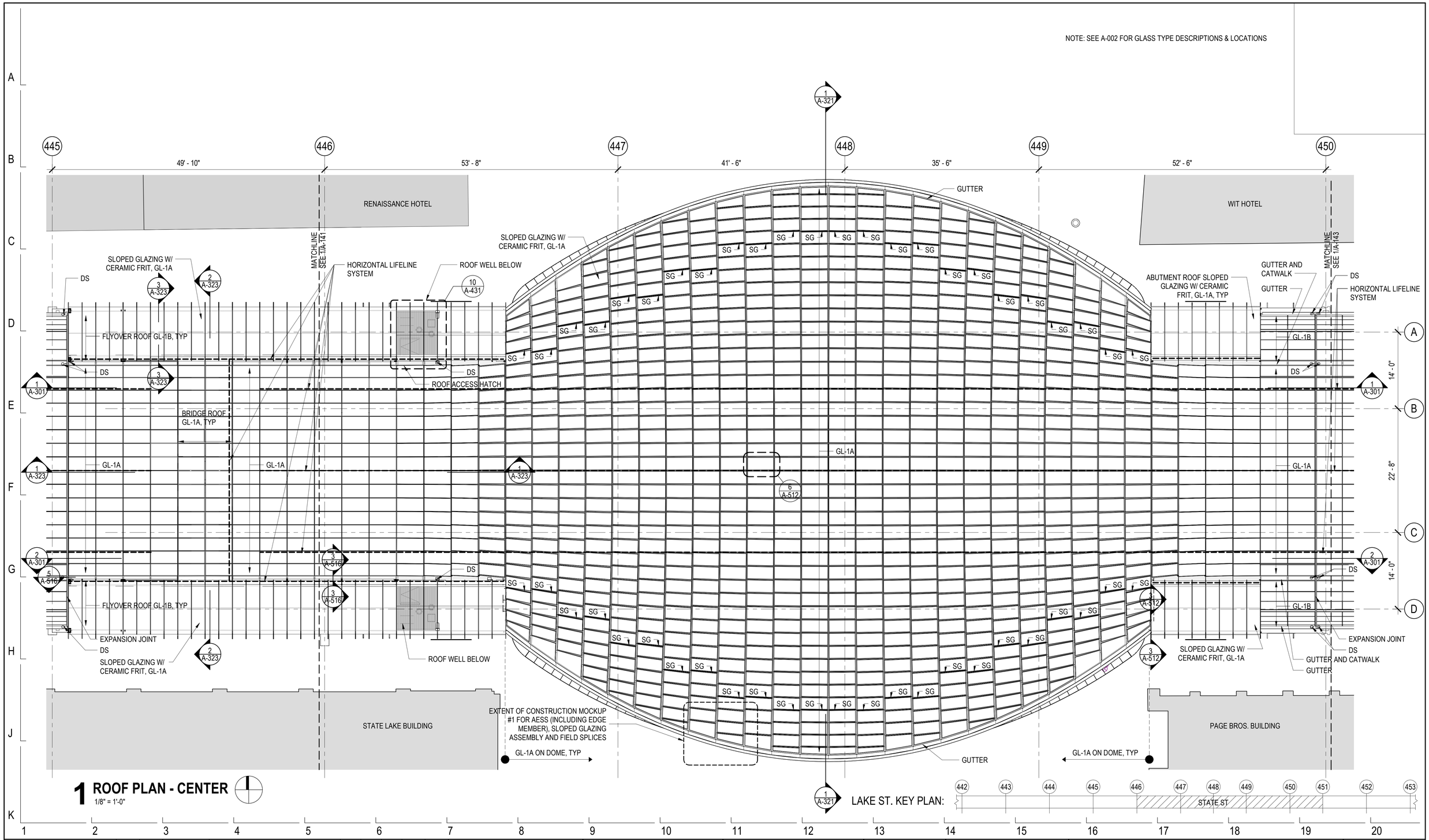

1 ROOF PLAN - CENTER

1/8" = 1'-0"

LAKE ST. KEY PLAN:

DESIGN BY:										
DRAWN BY:		4	7/3/2023	ISSUED FOR BID						
CHECKED BY:		1	11/4/2022	ISSUED FOR PERMIT REVISION 1						
APPROVED BY:		0	9/9/2022	ISSUED FOR PERMIT	MN	KH	SD			
CDOT/APPROVED BY:		NO.	DATE	REVISIONS	DES.	DRW.	CHK.	DCCO	CDOT	

TRANSYSTEMS
222 SOUTH RIVERSIDE PLAZA SUITE 610
CHICAGO, ILLINOIS 60606

SKIDMORE, OWINGS & MERRILL LLP
224 SOUTH MICHIGAN AVENUE, SUITE 1000
CHICAGO, ILLINOIS 60604

CHICAGO DEPARTMENT OF TRANSPORTATION
DIVISION OF ENGINEERING

STATE / LAKE LOOP ELEVATED STATION
200 NORTH STATE STREET, CHICAGO, IL 60601

SPEC. NO.

ENLARGED ROOF LEVEL PLAN - CENTER

DRAWING NO. A-142

CDOT PROJECT D-1-209 | DATE: 9/9/2022 | REVISION NO.1

NOTE: SEE A-002 FOR GLASS TYPE DESCRIPTIONS & LOCATIONS

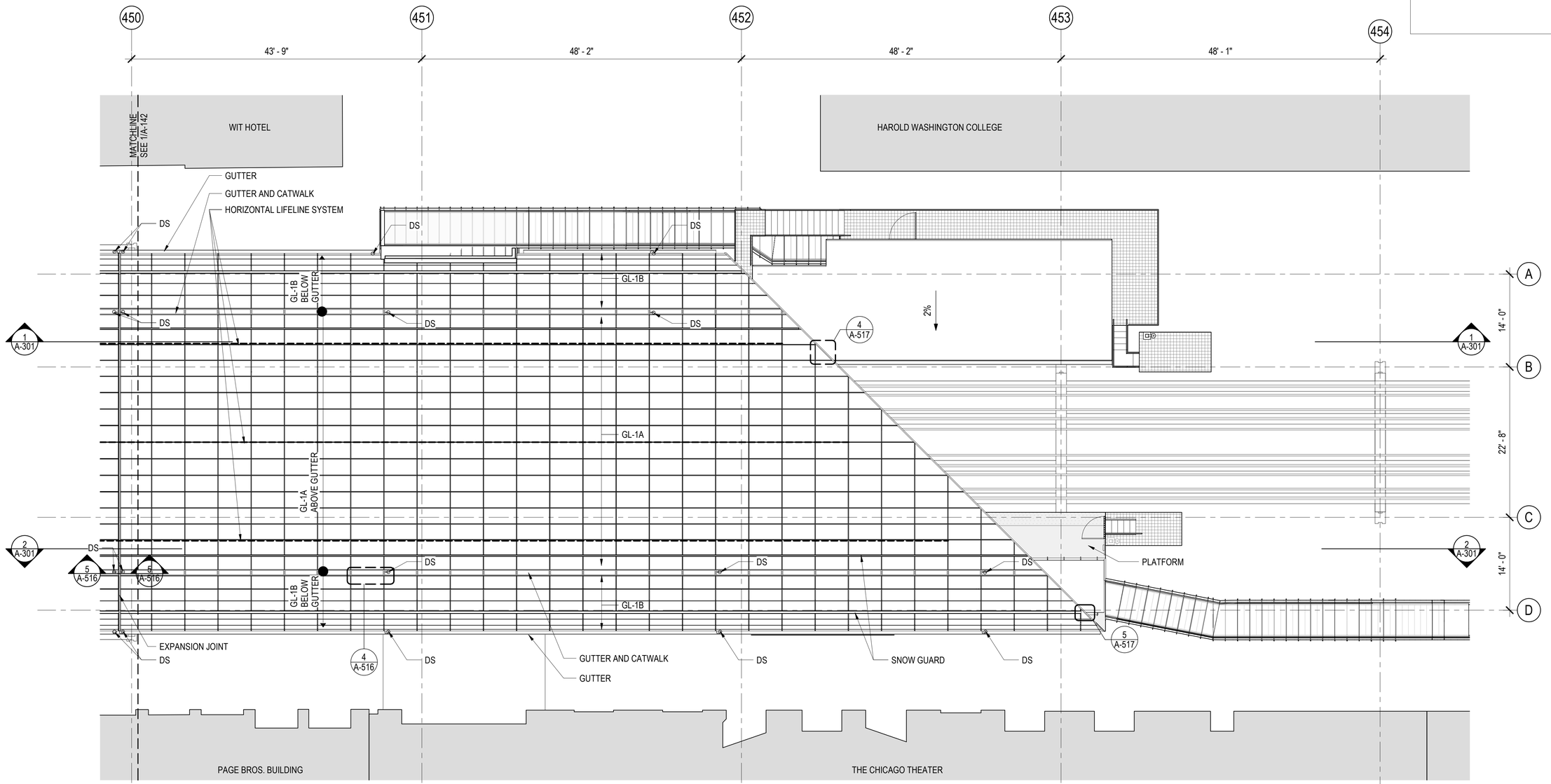

1 ROOF PLAN - EAST

1/8" = 1'-0"

LAKE ST. KEY PLAN:

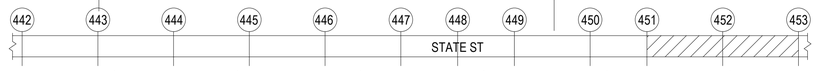

DESIGN BY:										
DRAWN BY:		4	7/3/2023	ISSUED FOR BID						
CHECKED BY:		1	11/4/2022	ISSUED FOR PERMIT REVISION 1						
APPROVED BY:		0	9/9/2022	ISSUED FOR PERMIT	MN	KH	SD			
CDOT/APPROVED BY:		NO.	DATE	REVISIONS	DES.	DRW.	CHK.	DCCO	CDOT	

TRANSYSTEMS
222 SOUTH RIVERSIDE PLAZA SUITE 610
CHICAGO, ILLINOIS 60606

SKIDMORE, OWINGS & MERRILL LLP
224 SOUTH MICHIGAN AVENUE, SUITE 1000
CHICAGO, ILLINOIS 60604

CHICAGO DEPARTMENT OF TRANSPORTATION
DIVISION OF ENGINEERING

STATE / LAKE LOOP ELEVATED STATION
200 NORTH STATE STREET, CHICAGO, IL 60601

SPEC. NO.

ENLARGED ROOF LEVEL PLAN - EAST

DRAWING NO. A-143

CDOT PROJECT D-1-209 | DATE: 9/9/2022 | REVISION NO.1

GENERAL NOTES:

1. PER PAINTING SPECIFICATION, AND AS INDICATED OR NOTED IN DRAWINGS, PAINTING INCLUDES ALL EXPOSED BARE AND COVERED PIPES, INCLUDING INSULATION OF EXPOSED PIPES, EXPOSED CONDUIT, HANGERS, EXPOSED STEEL AND IRON WORK, AND PRIMED METAL SURFACES OF MECHANICAL AND ELECTRICAL ITEMS. NOTE: UNDERSIDE OF CONCRETE PLATFORM IS NOT TO BE PAINTED. STAINLESS STEEL ITEMS ARE NOT TO BE PAINTED. REFER TO PAINTING SPECIFICATION FOR OTHER ITEMS NOT TO BE PAINTED. IF COLOR OR FINISH IS NOT DESIGNATED, THE AUTHORITY WILL SELECT FROM STANDARD COLORS OR FINISHES AVAILABLE.

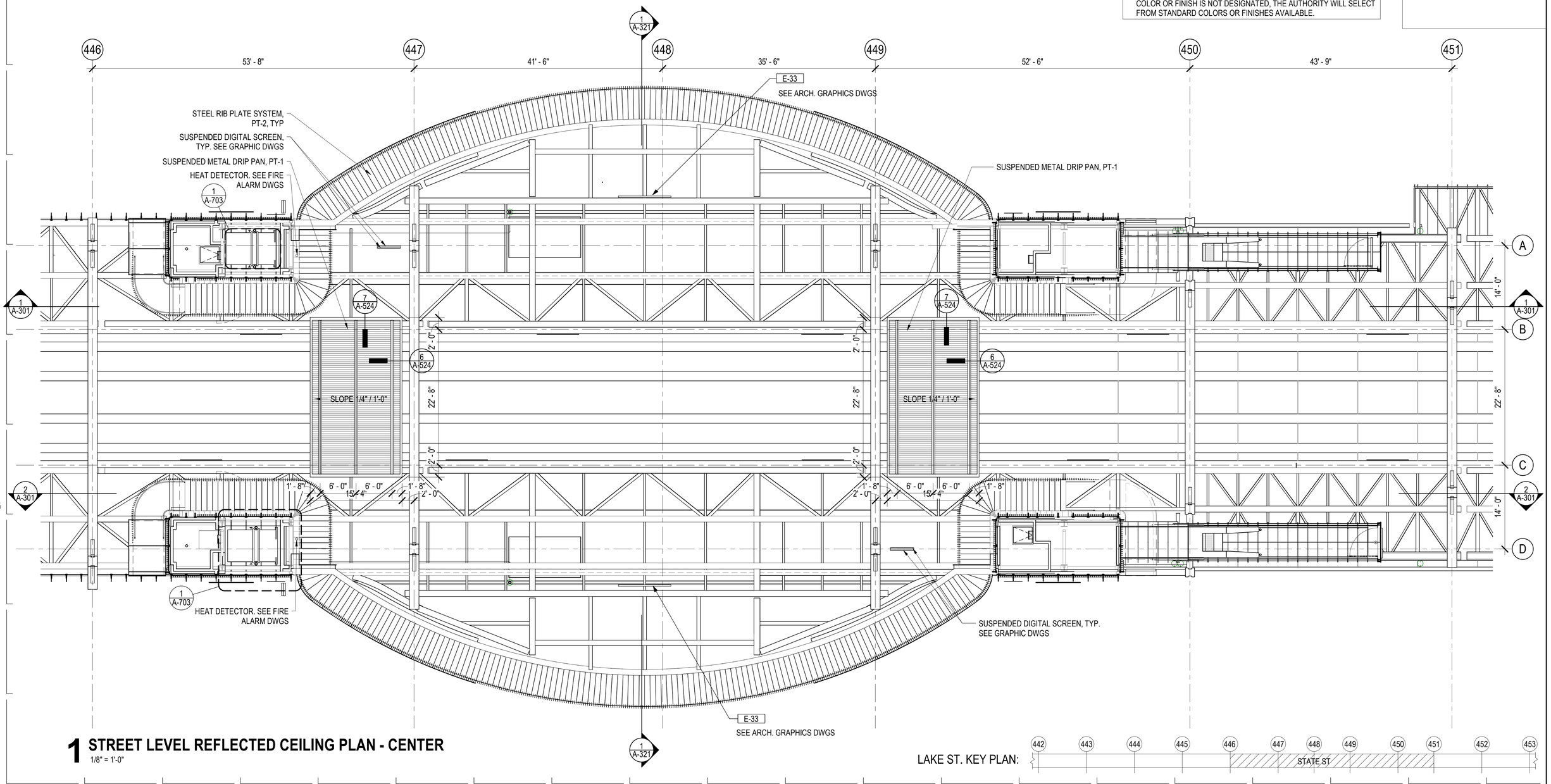

1 STREET LEVEL REFLECTED CEILING PLAN - CENTER

1/8" = 1'-0"

LAKE ST. KEY PLAN:

DESIGN BY:										
DRAWN BY:		4	7/3/2023	ISSUED FOR BID						
CHECKED BY:										
APPROVED BY:		0	9/9/2022	ISSUED FOR PERMIT	MN	KH	SD			
CDOT/APPROVED BY:		NO.	DATE	REVISIONS	DES.	DRW.	CHK.	DCCO	CDOT	

TRANSYSTEMS
222 SOUTH RIVERSIDE PLAZA SUITE 610
CHICAGO, ILLINOIS 60606

SKIDMORE, OWINGS & MERRILL LLP
224 SOUTH MICHIGAN AVENUE, SUITE 1000
CHICAGO, ILLINOIS 60604

CHICAGO DEPARTMENT OF TRANSPORTATION
DIVISION OF ENGINEERING

STATE / LAKE LOOP ELEVATED STATION
200 NORTH STATE STREET, CHICAGO, IL 60601

SPEC. NO.

STREET LEVEL REFLECTED CEILING PLAN - CENTER

DRAWING NO. A-152

CDOT PROJECT D-1-209

DATE: 9/9/2022

REVISION NO.

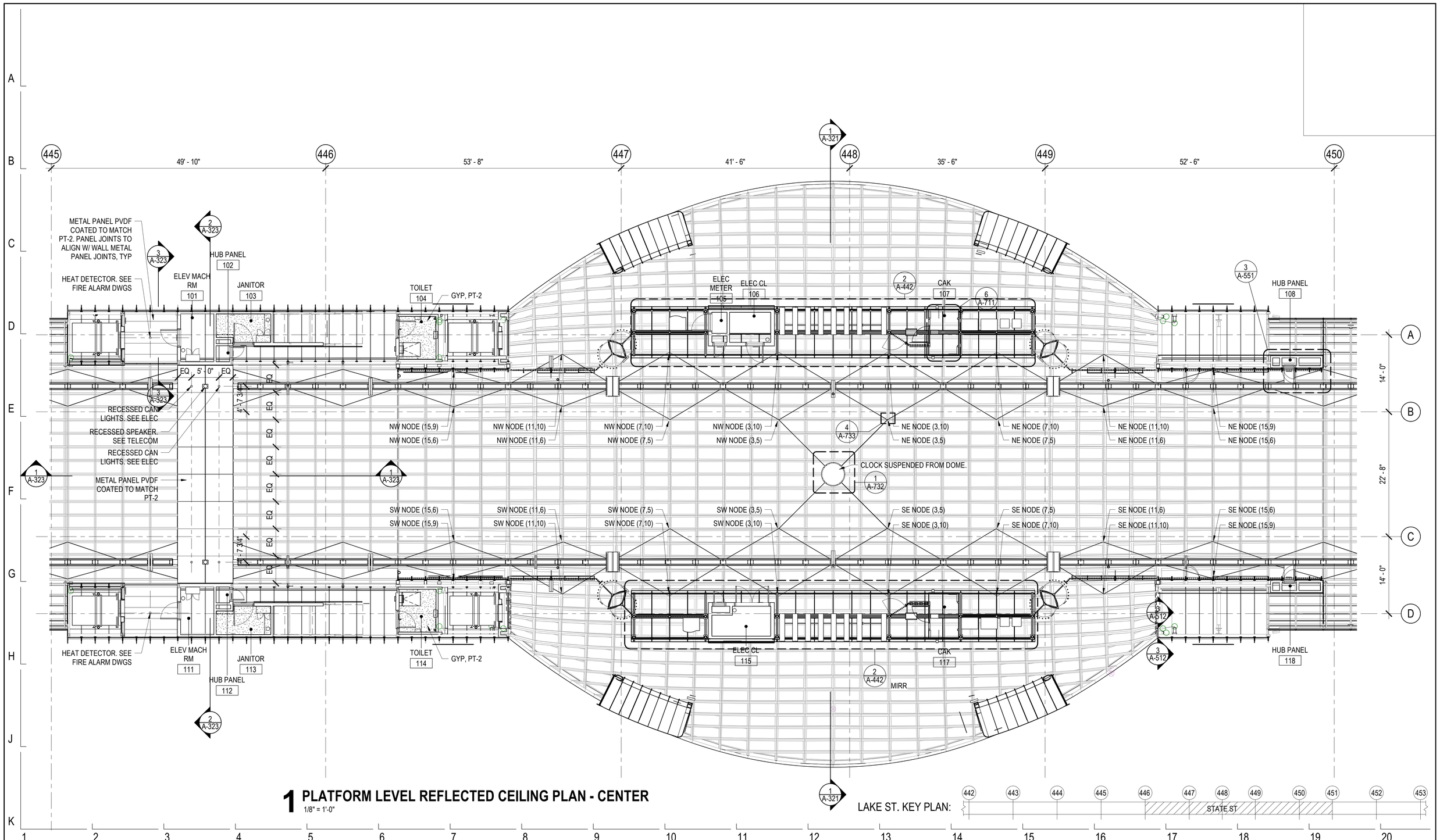

1 PLATFORM LEVEL REFLECTED CEILING PLAN - CENTER

1/8" = 1'-0"

LAKE ST. KEY PLAN:

DESIGN BY:										
DRAWN BY:		4	7/3/2023	ISSUED FOR BID						
CHECKED BY:										
APPROVED BY:		0	9/9/2022	ISSUED FOR PERMIT	MN	KH	SD			
CDOT/APPROVED BY:		NO.	DATE	REVISIONS	DES.	DRW.	CHK.	DCCO	CDOT	

TranSystems
TRANSYSTEMS
222 SOUTH RIVERSIDE PLAZA SUITE 610
CHICAGO, ILLINOIS 60606

SOM
SKIDMORE, OWINGS & MERRILL LLP
224 SOUTH MICHIGAN AVENUE, SUITE 1000
CHICAGO, ILLINOIS 60604

CDOT
CHICAGO DEPARTMENT OF TRANSPORTATION
DIVISION OF ENGINEERING

STATE / LAKE LOOP ELEVATED STATION
200 NORTH STATE STREET, CHICAGO, IL 60601

SPEC. NO.

PLATFORM LEVEL REFLECTED CEILING PLAN - CENTER

DRAWING NO. A-162

CDOT PROJECT D-1-209

DATE: 9/9/2022

REVISION NO.

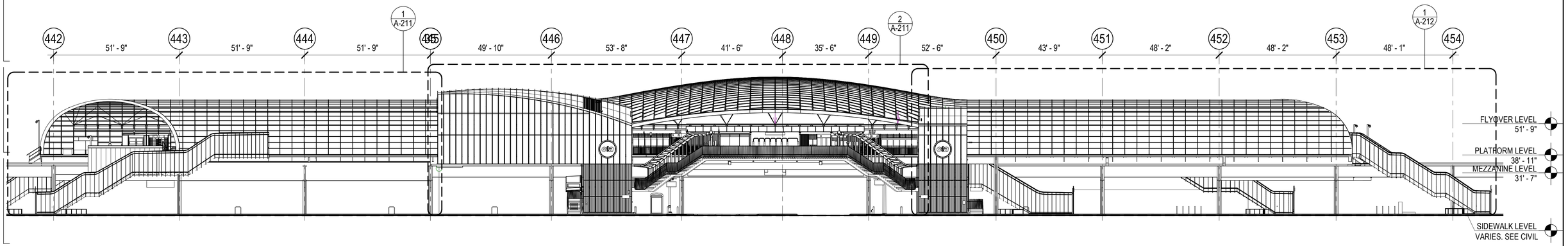

1 ELEVATION - SOUTH

1" = 20'-0"

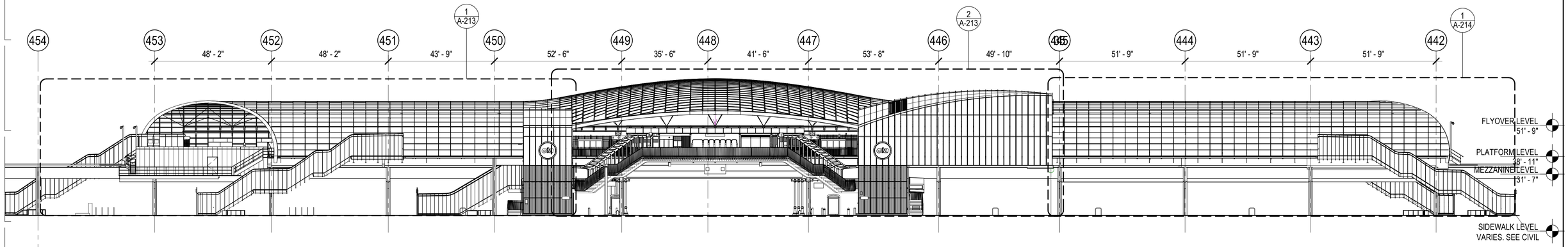

2 ELEVATION - NORTH

1" = 20'-0"

DESIGN BY:										
DRAWN BY:		4	7/3/2023	ISSUED FOR BID						
CHECKED BY:										
APPROVED BY:		0	9/9/2022	ISSUED FOR PERMIT	MN	KH	SD			
CDOT/APPROVED BY:		NO.	DATE	REVISIONS	DES.	DRW.	CHK.	DCCO	CDOT	

TRANSYSTEMS
222 SOUTH RIVERSIDE PLAZA SUITE 610
CHICAGO, ILLINOIS 60606

SKIDMORE, OWINGS & MERRILL LLP
224 SOUTH MICHIGAN AVENUE, SUITE 1000
CHICAGO, ILLINOIS 60604

CHICAGO DEPARTMENT OF TRANSPORTATION
DIVISION OF ENGINEERING

STATE / LAKE LOOP ELEVATED STATION
200 NORTH STATE STREET, CHICAGO, IL 60601

SPEC. NO.

SOUTH AND NORTH ELEVATIONS

DRAWING NO. A-201

CDOT PROJECT D-1-209

DATE: 9/9/2022

REVISION NO.

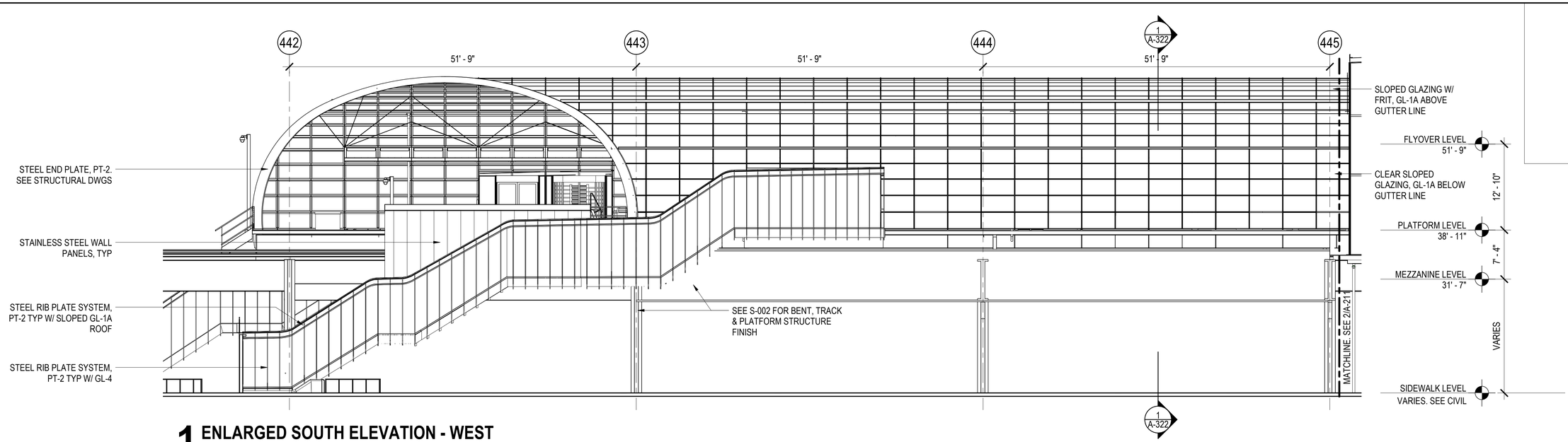

1 ENLARGED SOUTH ELEVATION - WEST

1/8" = 1'-0"

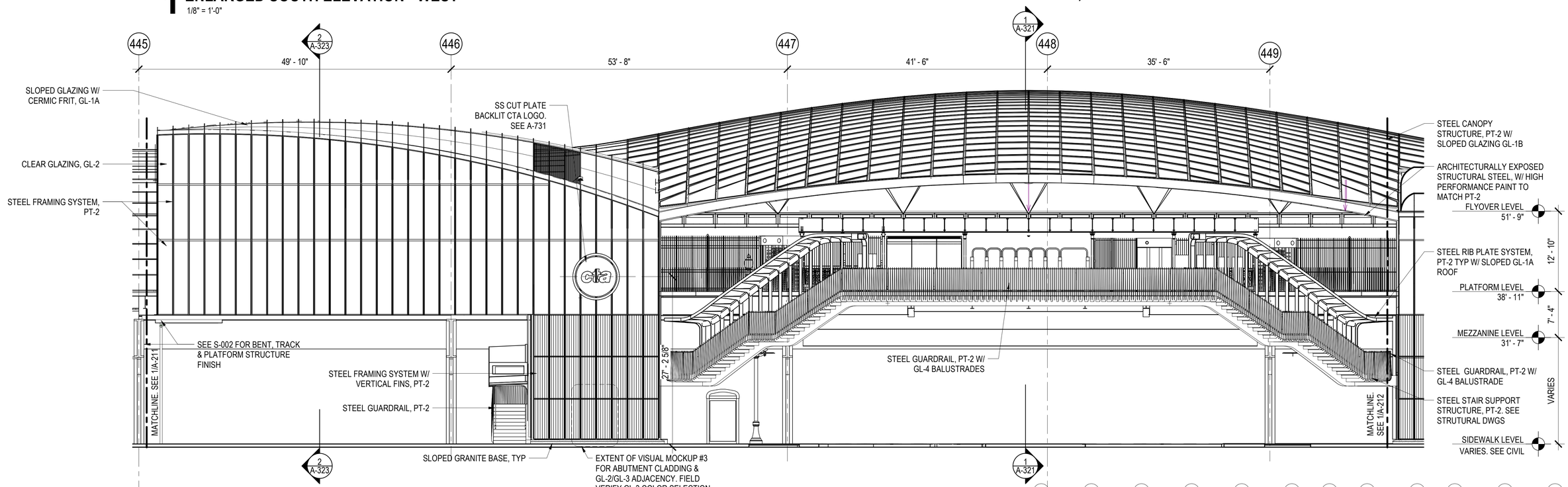

2 ENLARGED SOUTH ELEVATION - CENTER

1/8" = 1'-0"

LAKE ST. KEY PLAN:

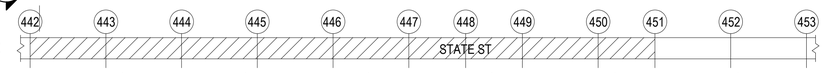

DESIGN BY:										
DRAWN BY:		4	7/3/2023	ISSUED FOR BID						
CHECKED BY:		1	11/4/2022	ISSUED FOR PERMIT REVISION 1						
APPROVED BY:		0	9/9/2022	ISSUED FOR PERMIT	MN	KH	SD			
CDOT/APPROVED BY:		NO.	DATE	REVISIONS	DES.	DRW.	CHK.	DCCO	CDOT	

TRANSYSTEMS
222 SOUTH RIVERSIDE PLAZA SUITE 610
CHICAGO, ILLINOIS 60606

SKIDMORE, OWINGS & MERRILL LLP
224 SOUTH MICHIGAN AVENUE, SUITE 1000
CHICAGO, ILLINOIS 60604

CHICAGO DEPARTMENT OF TRANSPORTATION
DIVISION OF ENGINEERING

STATE / LAKE LOOP ELEVATED STATION
200 NORTH STATE STREET, CHICAGO, IL 60601

SPEC. NO.

ENLARGED SOUTH ELEVATIONS

DRAWING NO. A-211

CDOT PROJECT D-1-209 | DATE: 9/9/2022 | REVISION NO.1

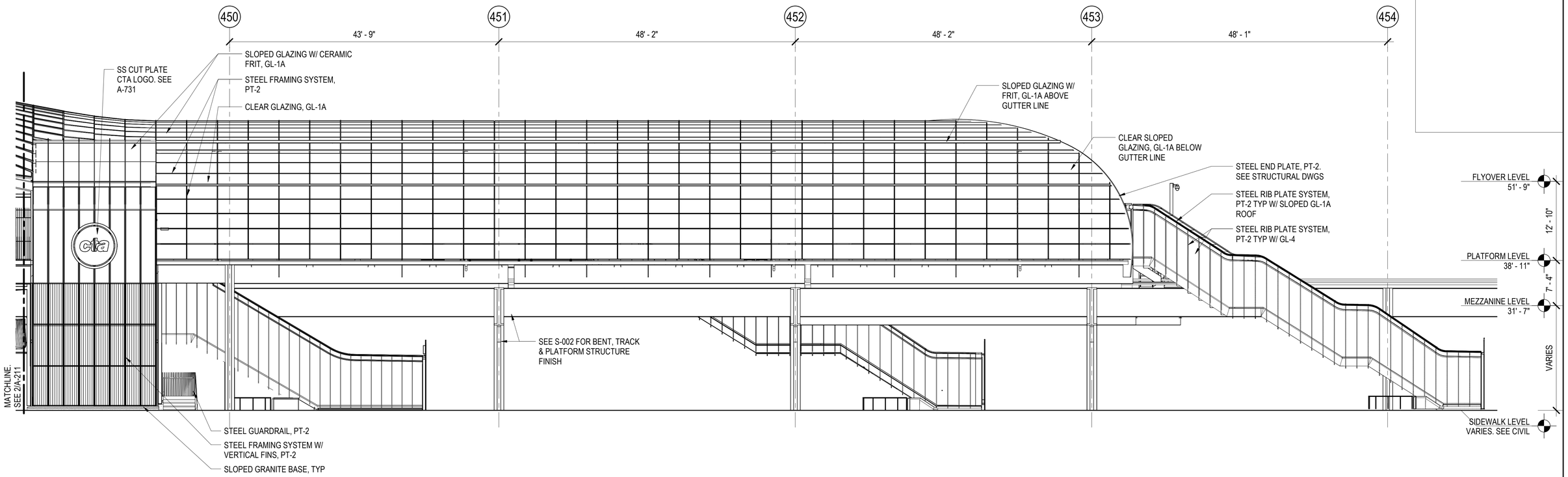

1 ENLARGED SOUTH ELEVATION - EAST

1/8" = 1'-0"

LAKE ST. KEY PLAN:

DESIGN BY:										
DRAWN BY:		4	7/3/2023	ISSUED FOR BID						
CHECKED BY:		1	11/4/2022	ISSUED FOR PERMIT REVISION 1						
APPROVED BY:		0	9/9/2022	ISSUED FOR PERMIT	MN	KH	SD			
CDOT/APPROVED BY:		NO.	DATE	REVISIONS	DES.	DRW.	CHK.	DCCO	CDOT	

TRANSYSTEMS
222 SOUTH RIVERSIDE PLAZA SUITE 610
CHICAGO, ILLINOIS 60606

SKIDMORE, OWINGS & MERRILL LLP
224 SOUTH MICHIGAN AVENUE, SUITE 1000
CHICAGO, ILLINOIS 60604

CHICAGO DEPARTMENT OF TRANSPORTATION
DIVISION OF ENGINEERING

STATE / LAKE LOOP ELEVATED STATION
200 NORTH STATE STREET, CHICAGO, IL 60601

SPEC. NO.

ENLARGED SOUTH ELEVATIONS

DRAWING NO. A-212

CDOT PROJECT D-1-209

DATE: 9/9/2022

REVISION NO. 1

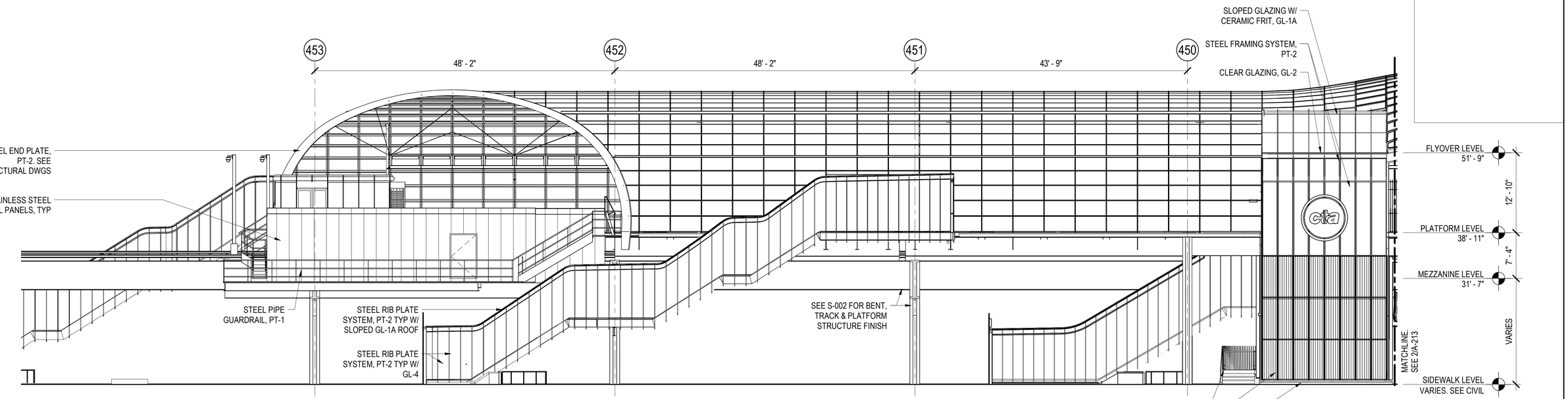

1 ENLARGED NORTH ELEVATION - EAST

1/8" = 1'-0"

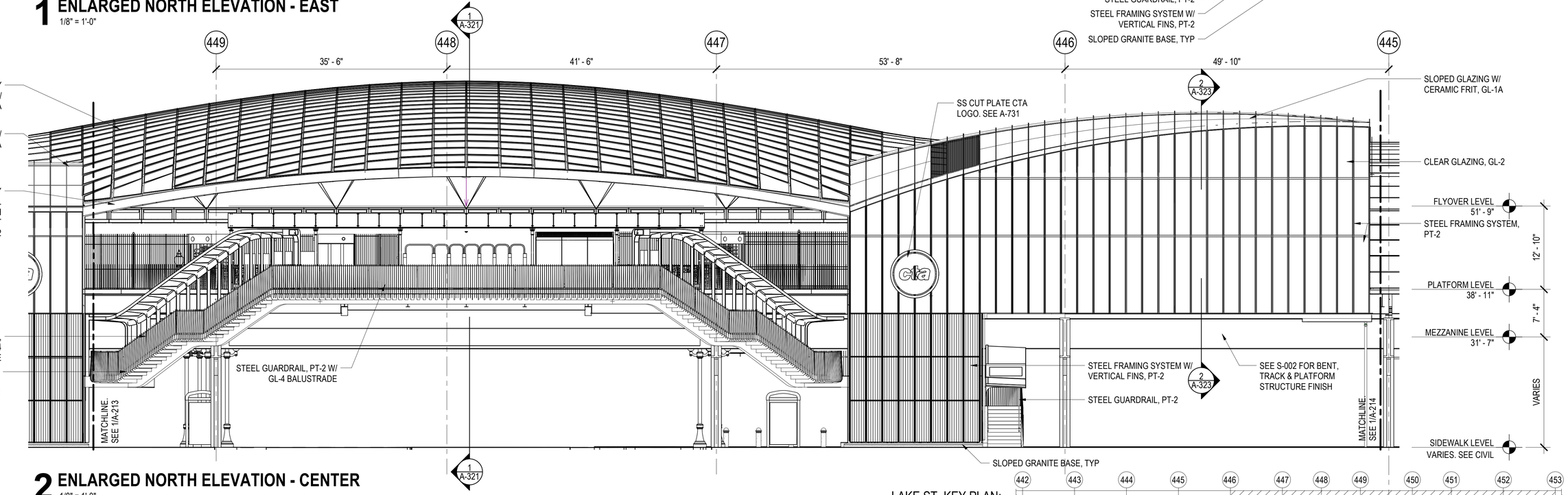

2 ENLARGED NORTH ELEVATION - CENTER

1/8" = 1'-0"

LAKE ST. KEY PLAN:

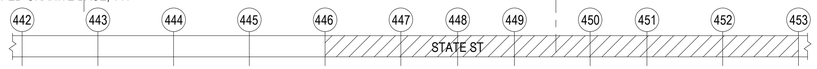

DESIGN BY:										
DRAWN BY:		4	7/3/2023	ISSUED FOR BID						
CHECKED BY:		1	11/4/2022	ISSUED FOR PERMIT REVISION 1						
APPROVED BY:		0	9/9/2022	ISSUED FOR PERMIT	MN	KH	SD			
CDOT/APPROVED BY:		NO.	DATE	REVISIONS	DES.	DRW.	CHK.	DCCO	CDOT	

TRANSYSTEMS
222 SOUTH RIVERSIDE PLAZA SUITE 610
CHICAGO, ILLINOIS 60606

SKIDMORE, OWINGS & MERRILL LLP
224 SOUTH MICHIGAN AVENUE, SUITE 1000
CHICAGO, ILLINOIS 60604

CHICAGO DEPARTMENT OF TRANSPORTATION
DIVISION OF ENGINEERING

STATE / LAKE LOOP ELEVATED STATION
200 NORTH STATE STREET, CHICAGO, IL 60601

SPEC. NO.

ENLARGED NORTH ELEVATIONS

DRAWING NO. A-213

CDOT PROJECT D-1-209 | DATE: 9/9/2022 | REVISION NO.1

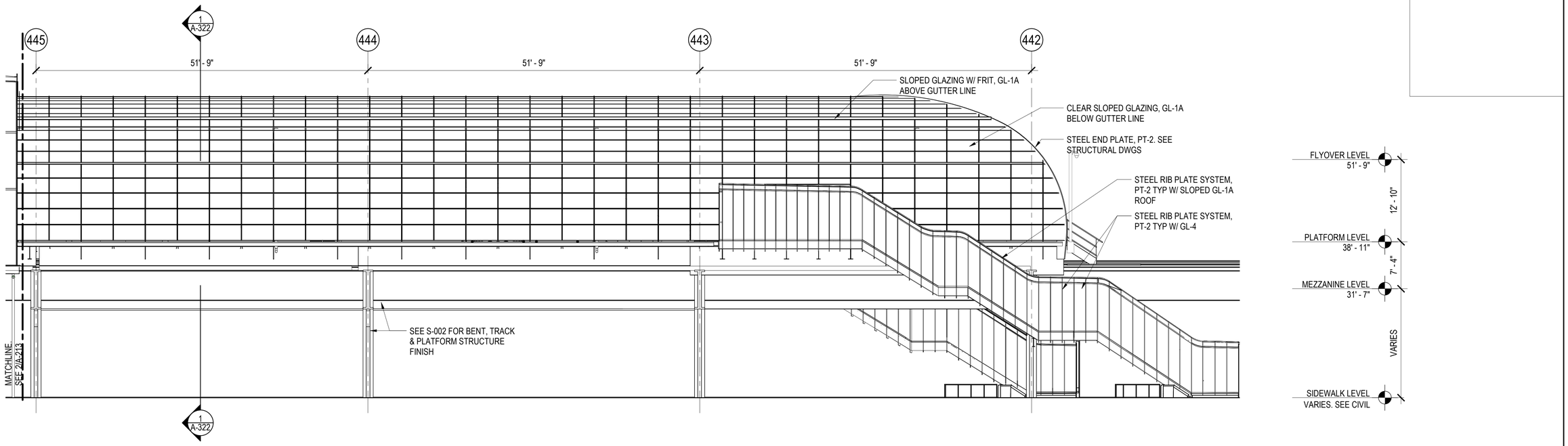

1 ENLARGED NORTH ELEVATION - WEST

1/8" = 1'-0"

LAKE ST. KEY PLAN:

DESIGN BY:										
DRAWN BY:		4	7/3/2023	ISSUED FOR BID						
CHECKED BY:		1	11/4/2022	ISSUED FOR PERMIT REVISION 1						
APPROVED BY:		0	9/9/2022	ISSUED FOR PERMIT	MN	KH	SD			
CDOT/APPROVED BY:		NO.	DATE	REVISIONS	DES.	DRW.	CHK.	DCCO	CDOT	

TRANSYSTEMS
222 SOUTH RIVERSIDE PLAZA SUITE 610
CHICAGO, ILLINOIS 60606

SKIDMORE, OWINGS & MERRILL LLP
224 SOUTH MICHIGAN AVENUE, SUITE 1000
CHICAGO, ILLINOIS 60604

CHICAGO DEPARTMENT
OF TRANSPORTATION
DIVISION OF ENGINEERING

STATE / LAKE LOOP ELEVATED STATION
200 NORTH STATE STREET, CHICAGO, IL 60601

SPEC. NO.

ENLARGED NORTH ELEVATIONS

DRAWING NO.
A-214

CDOT PROJECT D-1-209

DATE: 9/9/2022

REVISION NO.1

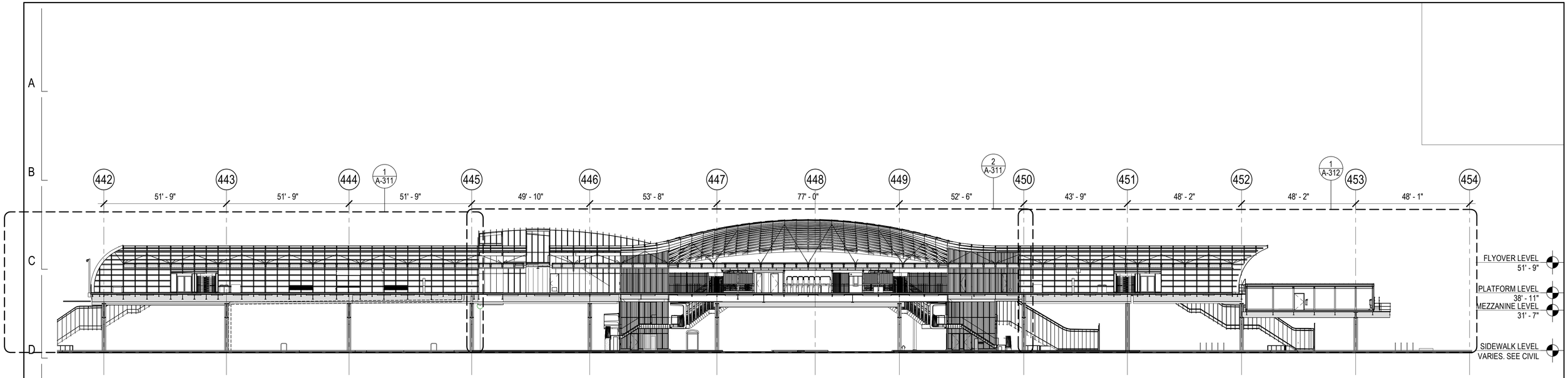

1 LONGITUDINAL SECTION - NORTH PLATFORM

1" = 20'-0"

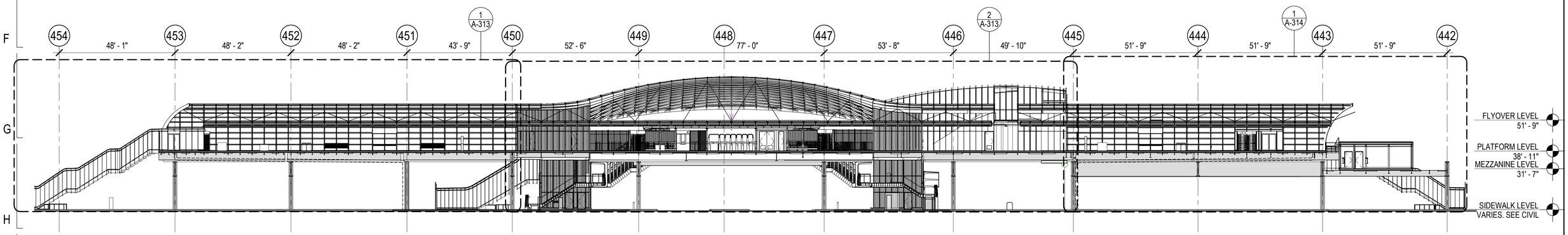

2 LONGITUDINAL SECTION - SOUTH PLATFORM

1" = 20'-0"

DESIGN BY:									
DRAWN BY:		4	7/3/2023	ISSUED FOR BID					
CHECKED BY:									
APPROVED BY:		0	9/9/2022	ISSUED FOR PERMIT	MN	KH	SD		
CDOT/APPROVED BY:		NO.	DATE	REVISIONS	DES.	DRW.	CHK.	DCCO	CDOT

TRANSYSTEMS
222 SOUTH RIVERSIDE PLAZA SUITE 610
CHICAGO, ILLINOIS 60606

SKIDMORE, OWINGS & MERRILL LLP
224 SOUTH MICHIGAN AVENUE, SUITE 1000
CHICAGO, ILLINOIS 60604

CHICAGO DEPARTMENT
OF TRANSPORTATION
DIVISION OF ENGINEERING

STATE / LAKE LOOP ELEVATED STATION
200 NORTH STATE STREET, CHICAGO, IL 60601

SPEC. NO.

OVERALL LONGITUDINAL SECTIONS

DRAWING NO.
A-301

CDOT PROJECT D-1-209

DATE: 9/9/2022

REVISION NO.

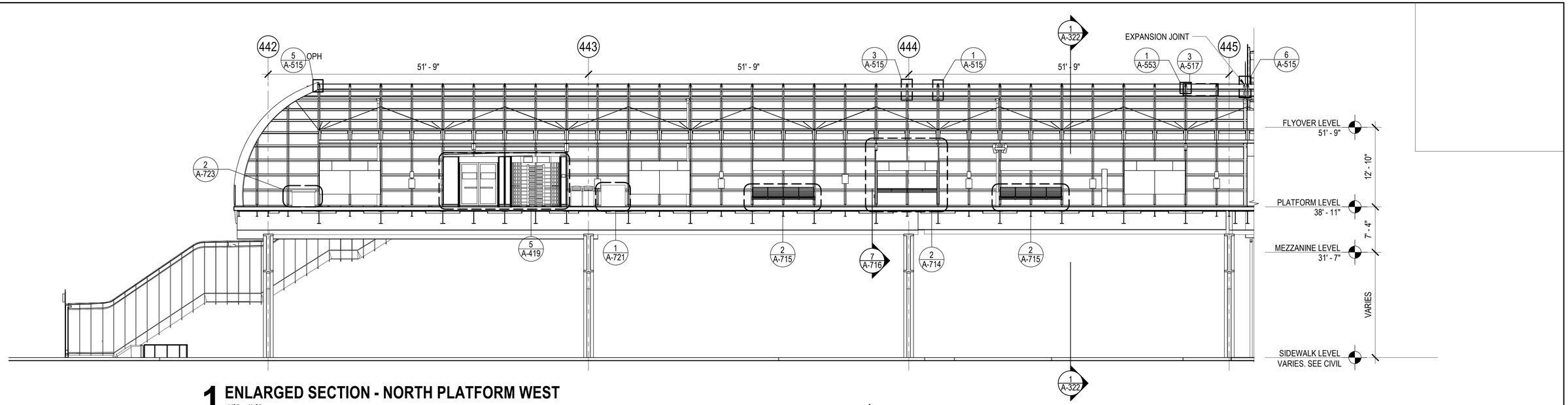

1 ENLARGED SECTION - NORTH PLATFORM WEST

1/8" = 1'-0"

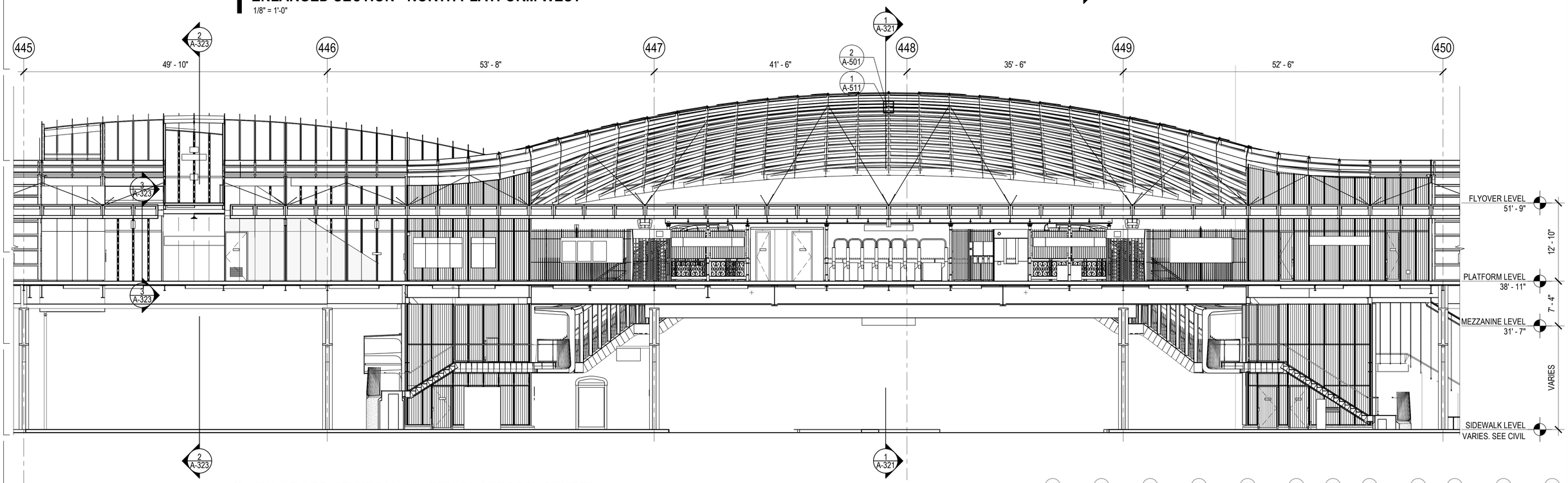

2 ENLARGED SECTION - NORTH PLATFORM CENTER

1/8" = 1'-0"

LAKE ST. KEY PLAN:

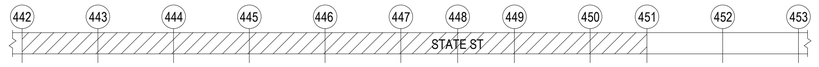

DESIGN BY:									
DRAWN BY:		4	7/3/2023	ISSUED FOR BID					
CHECKED BY:									
APPROVED BY:		0	9/9/2022	ISSUED FOR PERMIT	MN	KH	SD		
CDOT/APPROVED BY:		NO.	DATE	REVISIONS	DES.	DRW.	CHK.	DCCO	CDOT

TRANSYSTEMS
222 SOUTH RIVERSIDE PLAZA SUITE 610
CHICAGO, ILLINOIS 60606

SKIDMORE, OWINGS & MERRILL LLP
224 SOUTH MICHIGAN AVENUE, SUITE 1000
CHICAGO, ILLINOIS 60604

CHICAGO DEPARTMENT OF TRANSPORTATION
DIVISION OF ENGINEERING

STATE / LAKE LOOP ELEVATED STATION
200 NORTH STATE STREET, CHICAGO, IL 60601

ENLARGED LONGITUDINAL SECTIONS - NORTH PLATFORM

CDOT PROJECT D-1-209

DATE: 9/9/2022

SPEC. NO.

DRAWING NO. A-311

REVISION NO.

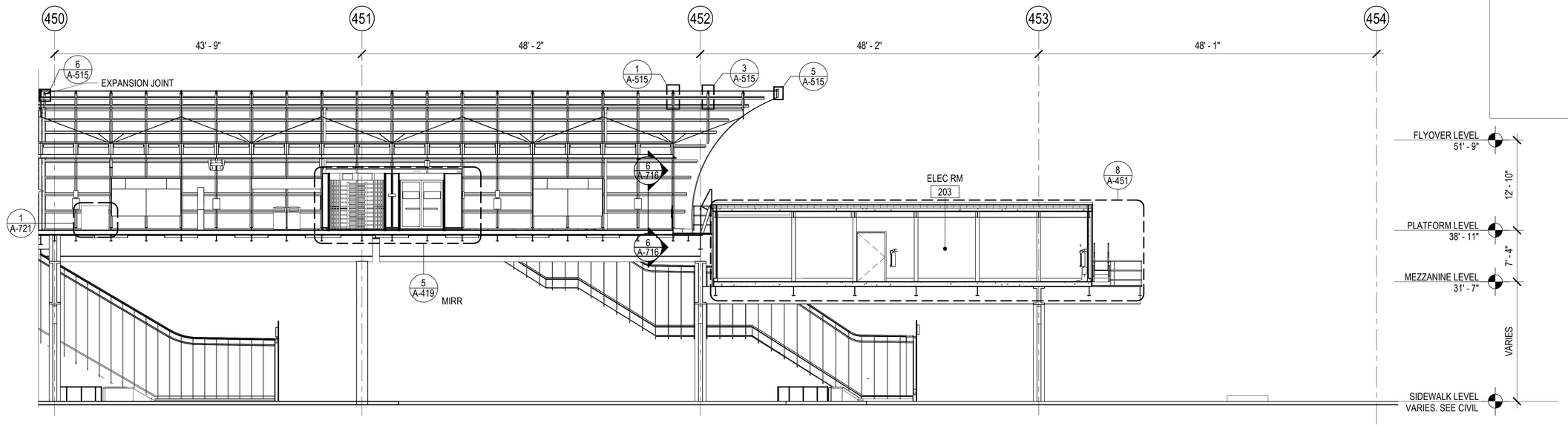

1 ENLARGED SECTION - NORTH PLATFORM EAST

1/8" = 1'-0"

LAKE ST. KEY PLAN:

DESIGN BY:										
DRAWN BY:		4	7/3/2023	ISSUED FOR BID						
CHECKED BY:										
APPROVED BY:		0	9/9/2022	ISSUED FOR PERMIT	MN	KH	SD			
CDOT/APPROVED BY:		NO.	DATE	REVISIONS	DES.	DRW.	CHK.	DCCO	CDOT	

TRANSYSTEMS
222 SOUTH RIVERSIDE PLAZA SUITE 610
CHICAGO, ILLINOIS 60606

SKIDMORE, OWINGS & MERRILL LLP
224 SOUTH MICHIGAN AVENUE, SUITE 1000
CHICAGO, ILLINOIS 60604

CHICAGO DEPARTMENT OF TRANSPORTATION
DIVISION OF ENGINEERING

STATE / LAKE LOOP ELEVATED STATION
200 NORTH STATE STREET, CHICAGO, IL 60601

SPEC. NO.

ENLARGED LONGITUDINAL SECTIONS - NORTH PLATFORM

DRAWING NO.
A-312

CDOT PROJECT D-1-209

DATE: 9/9/2022

REVISION NO.

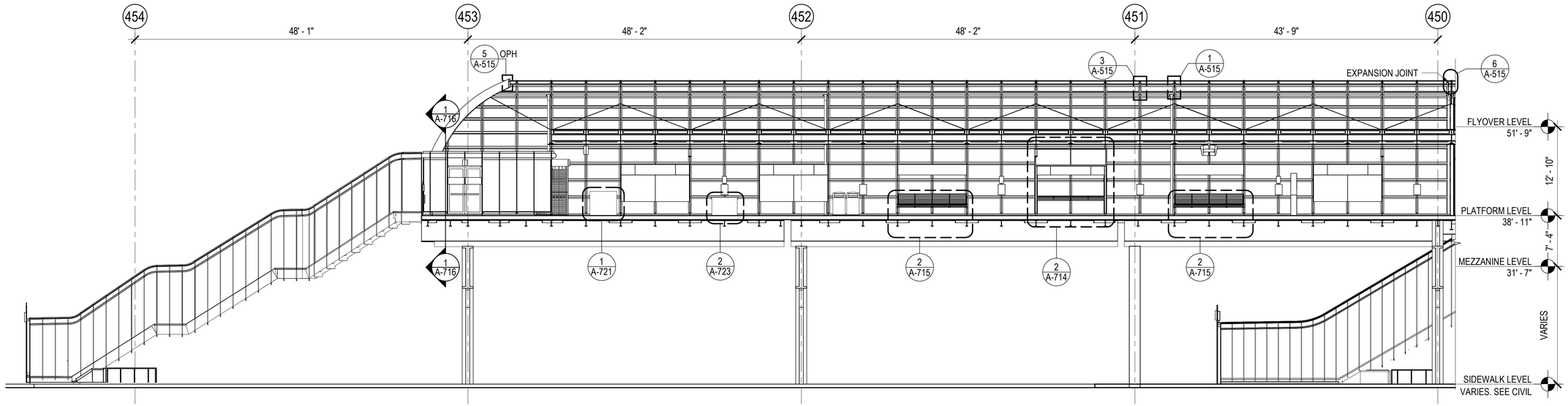

1 ENLARGED SECTION - SOUTH PLATFORM EAST

1/8" = 1'-0"

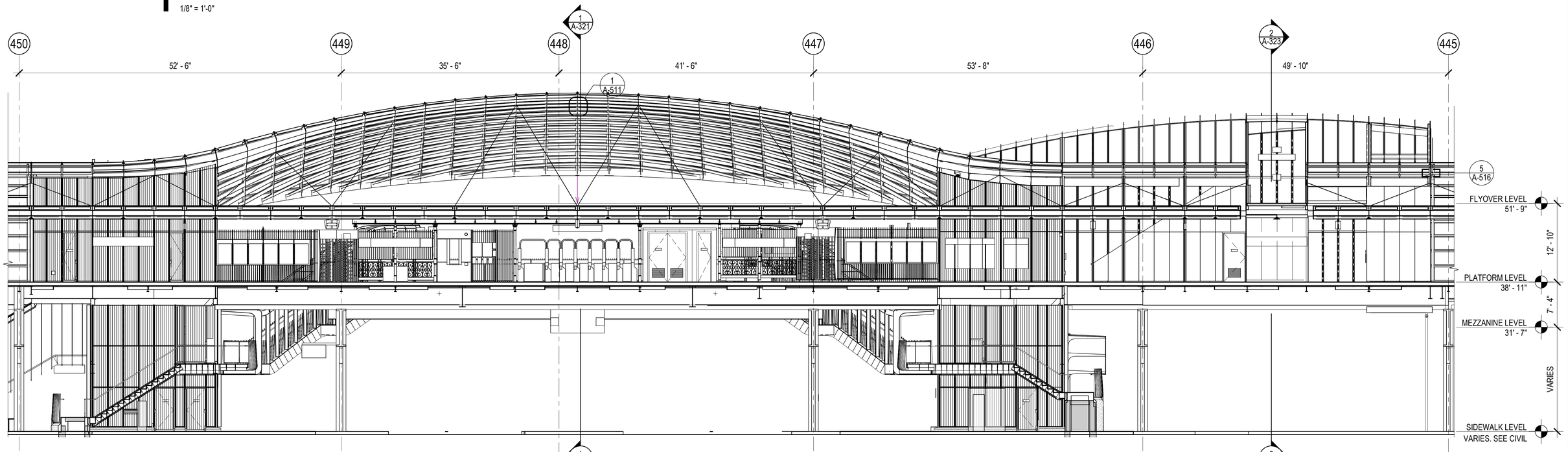

2 ENLARGED SECTION - SOUTH PLATFORM CENTER

1/8" = 1'-0"

LAKE ST. KEY PLAN:

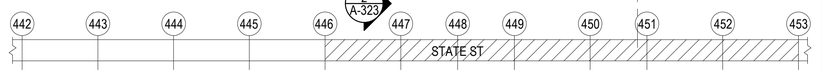

DESIGN BY:									
DRAWN BY:		4	7/3/2023	ISSUED FOR BID					
CHECKED BY:									
APPROVED BY:		0	9/9/2022	ISSUED FOR PERMIT	MN	KH	SD		
CDOT/APPROVED BY:		NO.	DATE	REVISIONS	DES.	DRW.	CHK.	DCCO	CDOT

TRANSYSTEMS
222 SOUTH RIVERSIDE PLAZA SUITE 610
CHICAGO, ILLINOIS 60606

SKIDMORE, OWINGS & MERRILL LLP
224 SOUTH MICHIGAN AVENUE, SUITE 1000
CHICAGO, ILLINOIS 60604

CHICAGO DEPARTMENT OF TRANSPORTATION
DIVISION OF ENGINEERING

STATE / LAKE LOOP ELEVATED STATION
200 NORTH STATE STREET, CHICAGO, IL 60601

SPEC. NO.

ENLARGED LONGITUDINAL SECTIONS - SOUTH PLATFORM

DRAWING NO. A-313

CDOT PROJECT D-1-209

DATE: 9/9/2022

REVISION NO.

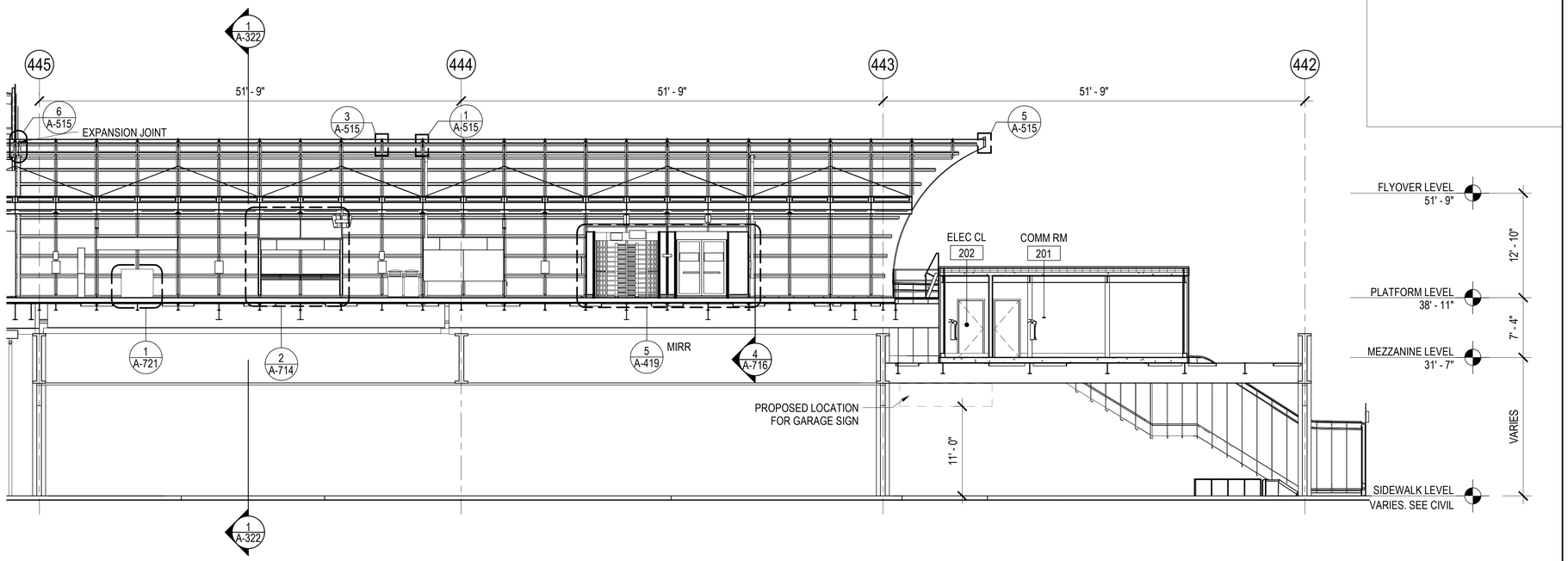

1 ENLARGED SECTION - SOUTH PLATFORM WEST

1/8" = 1'-0"

LAKE ST. KEY PLAN:

DESIGN BY:										
DRAWN BY:		4	7/3/2023	ISSUED FOR BID						
CHECKED BY:										
APPROVED BY:		0	9/9/2022	ISSUED FOR PERMIT	MN	KH	SD			
CDOT/APPROVED BY:		NO.	DATE	REVISIONS	DES.	DRW.	CHK.	DCCO	CDOT	

TRANSYSTEMS
222 SOUTH RIVERSIDE PLAZA SUITE 610
CHICAGO, ILLINOIS 60606

SKIDMORE, OWINGS & MERRILL LLP
224 SOUTH MICHIGAN AVENUE, SUITE 1000
CHICAGO, ILLINOIS 60604

CHICAGO DEPARTMENT
OF TRANSPORTATION
DIVISION OF ENGINEERING

STATE / LAKE LOOP ELEVATED STATION
200 NORTH STATE STREET, CHICAGO, IL 60601

ENLARGED LONGITUDINAL SECTIONS - SOUTH PLATFORM

CDOT PROJECT D-1-209

DATE: 9/9/2022

SPEC. NO.

DRAWING NO.
A-314

REVISION NO.

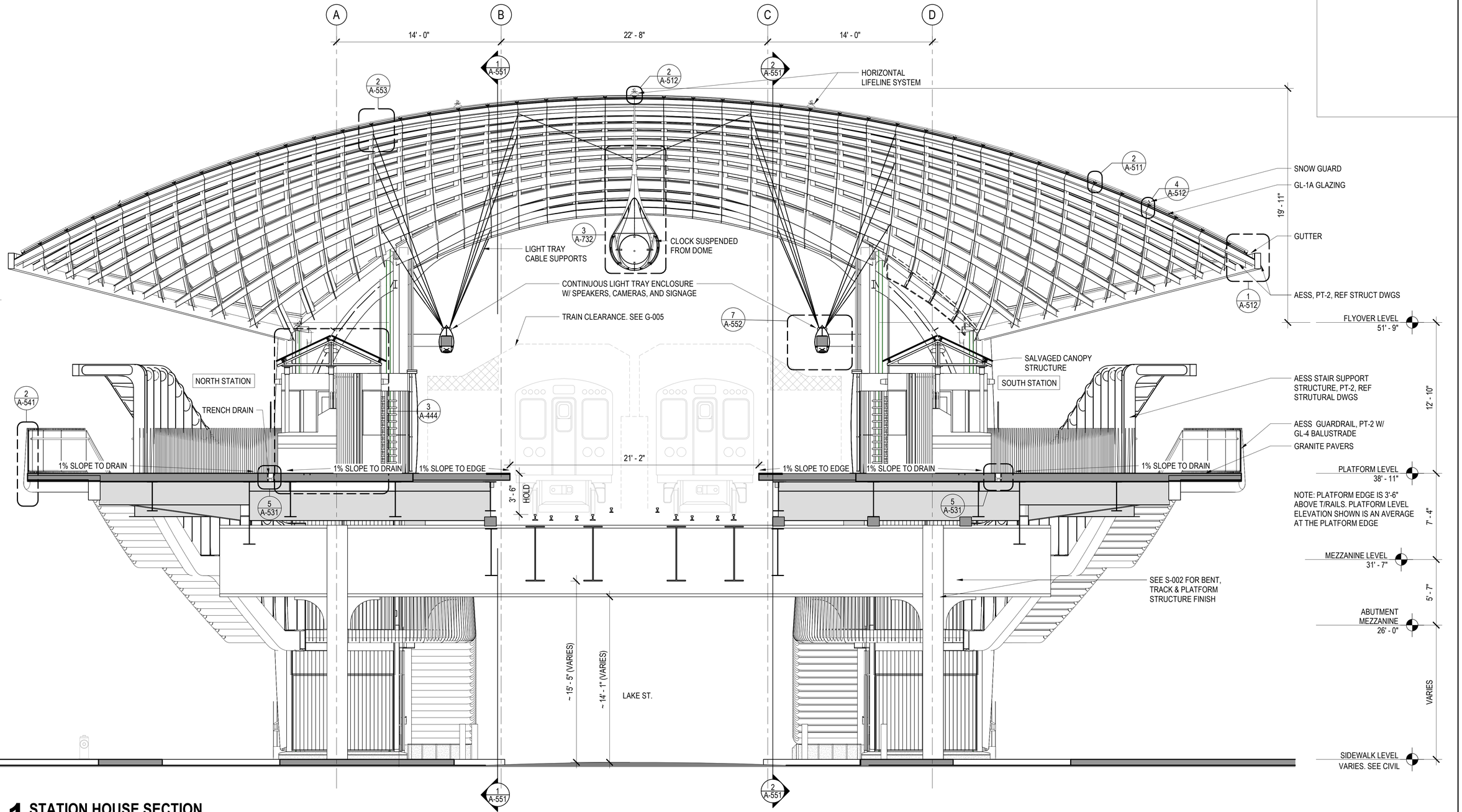

1 STATION HOUSE SECTION

1/4" = 1'-0"

DESIGN BY:									
DRAWN BY:		4	7/3/2023	ISSUED FOR BID					
CHECKED BY:									
APPROVED BY:		0	9/9/2022	ISSUED FOR PERMIT	MN	KH	SD		
CDOT/APPROVED BY:		NO.	DATE	REVISIONS	DES.	DRW.	CHK.	DCCO	CDOT

TranSystems
TRANSYSTEMS
222 SOUTH RIVERSIDE PLAZA SUITE 610
CHICAGO, ILLINOIS 60606

SOM
SKIDMORE, OWINGS & MERRILL LLP
224 SOUTH MICHIGAN AVENUE, SUITE 1000
CHICAGO, ILLINOIS 60604

CDOT
CHICAGO DEPARTMENT OF TRANSPORTATION
DIVISION OF ENGINEERING

STATE / LAKE LOOP ELEVATED STATION
200 NORTH STATE STREET, CHICAGO, IL 60601

TRANSVERSE SECTION - STATION HOUSE

CDOT PROJECT D-1-209

DATE: 9/9/2022

SPEC. NO.

DRAWING NO. A-321

REVISION NO.

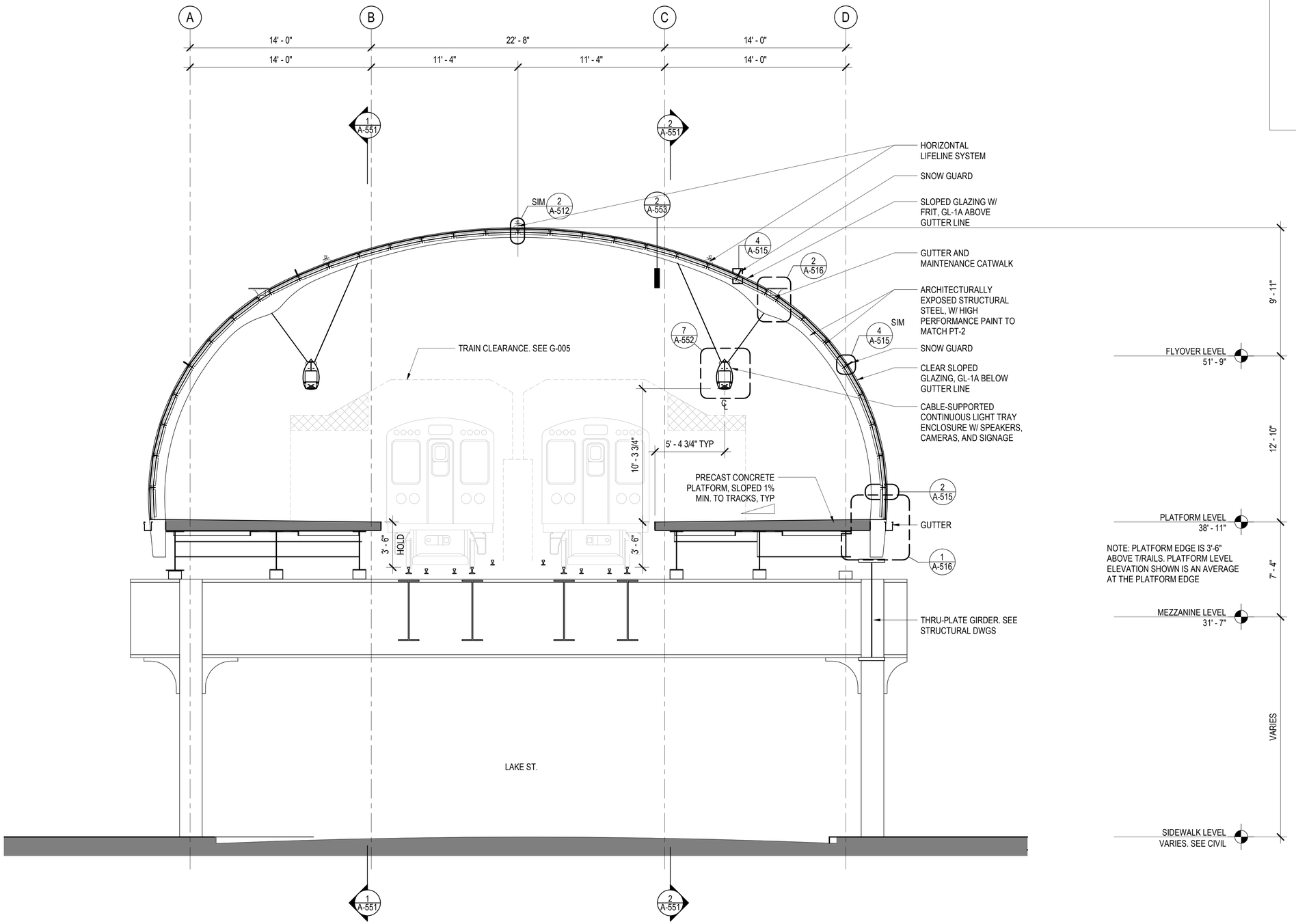

DESIGN BY:									
DRAWN BY:		4	7/3/2023	ISSUED FOR BID					
CHECKED BY:									
APPROVED BY:		0	9/9/2022	ISSUED FOR PERMIT	MN	KH	SD		
CDOT/APPROVED BY:		NO.	DATE	REVISIONS	DES.	DRW.	CHK.	DCCO	CDOT

TRANSYSTEMS
222 SOUTH RIVERSIDE PLAZA SUITE 610
CHICAGO, ILLINOIS 60606

SKIDMORE, OWINGS & MERRILL LLP
224 SOUTH MICHIGAN AVENUE, SUITE 1000
CHICAGO, ILLINOIS 60604

CHICAGO DEPARTMENT OF TRANSPORTATION
DIVISION OF ENGINEERING

STATE / LAKE LOOP ELEVATED STATION
200 NORTH STATE STREET, CHICAGO, IL 60601

SPEC. NO.

TRANSVERSE SECTION - TYPICAL PLATFORM

DRAWING NO. A-322

CDOT PROJECT D-1-209

DATE: 9/9/2022

REVISION NO.

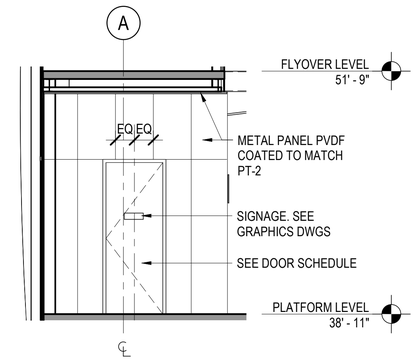

3 ELEVATION - FLYOVER MACHINE RM

1/4" = 1'-0"

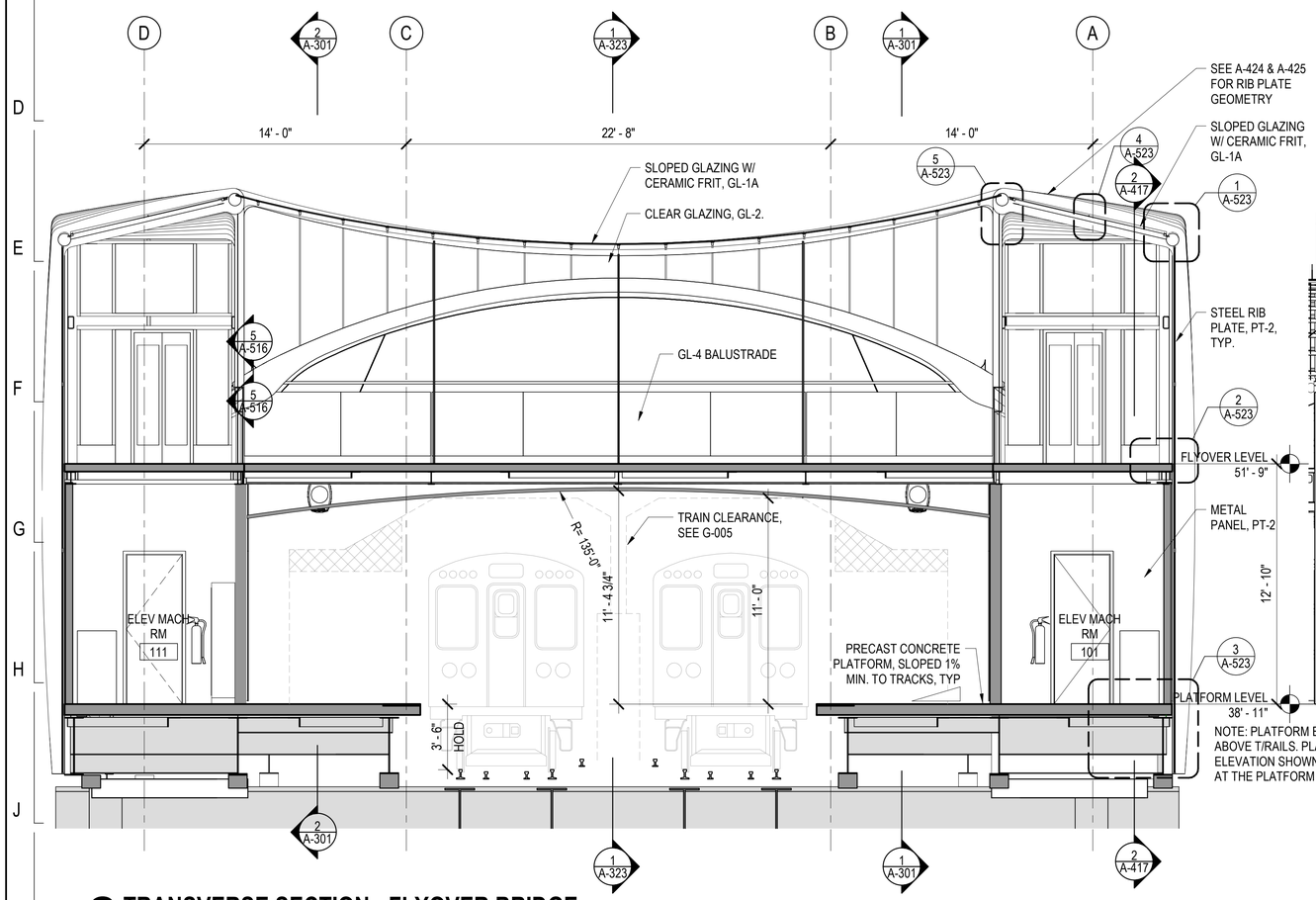

2 TRANSVERSE SECTION - FLYOVER BRIDGE

1/4" = 1'-0"

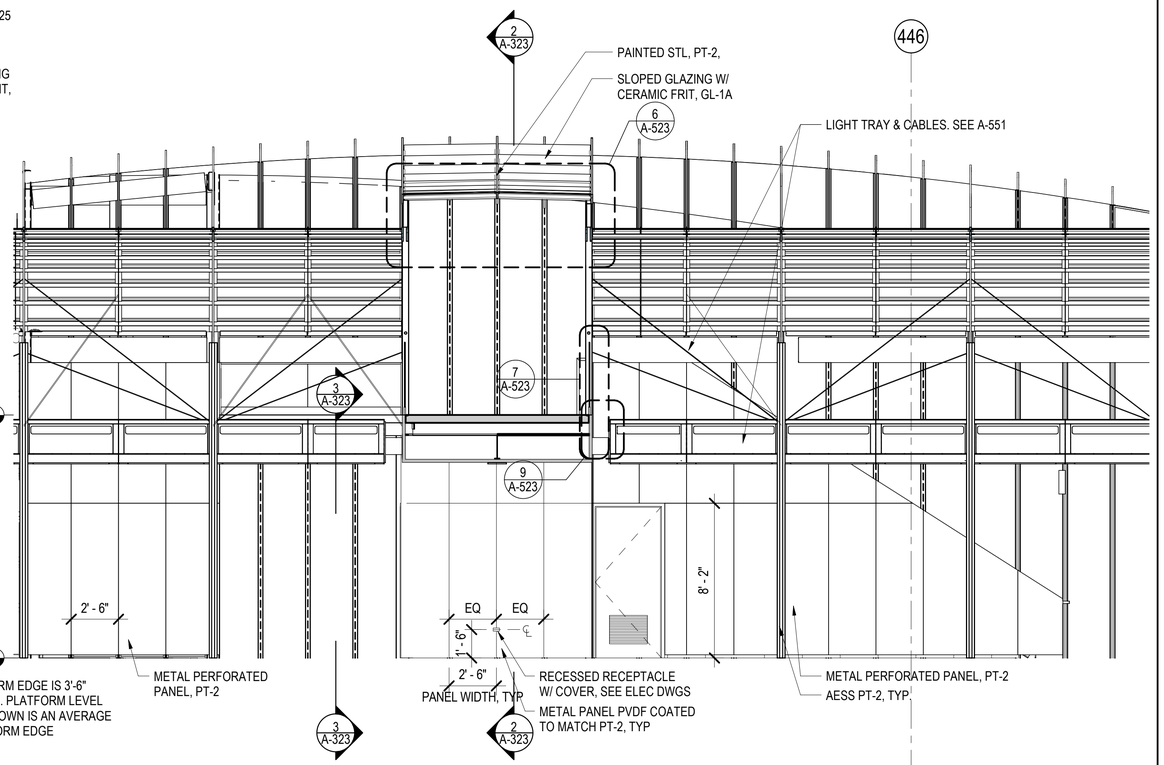

1 ENLARGED SECTION - FLYOVER BRIDGE

1/4" = 1'-0"

DESIGN BY:										
DRAWN BY:		4	7/3/2023	ISSUED FOR BID						
CHECKED BY:										
APPROVED BY:		0	9/9/2022	ISSUED FOR PERMIT	MN	KH	SD			
CDOT/APPROVED BY:		NO.	DATE	REVISIONS	DES.	DRW.	CHK.	DCCO	CDOT	

TRANSYSTEMS
222 SOUTH RIVERSIDE PLAZA SUITE 610
CHICAGO, ILLINOIS 60606

SKIDMORE, OWINGS & MERRILL LLP
224 SOUTH MICHIGAN AVENUE, SUITE 1000
CHICAGO, ILLINOIS 60604

CHICAGO DEPARTMENT
OF TRANSPORTATION
DIVISION OF ENGINEERING

STATE / LAKE LOOP ELEVATED STATION
200 NORTH STATE STREET, CHICAGO, IL 60601

SPEC. NO.

FLYOVER SECTIONS

DRAWING NO.
A-323

CDOT PROJECT D-1-209

DATE: 9/9/2022

REVISION NO.

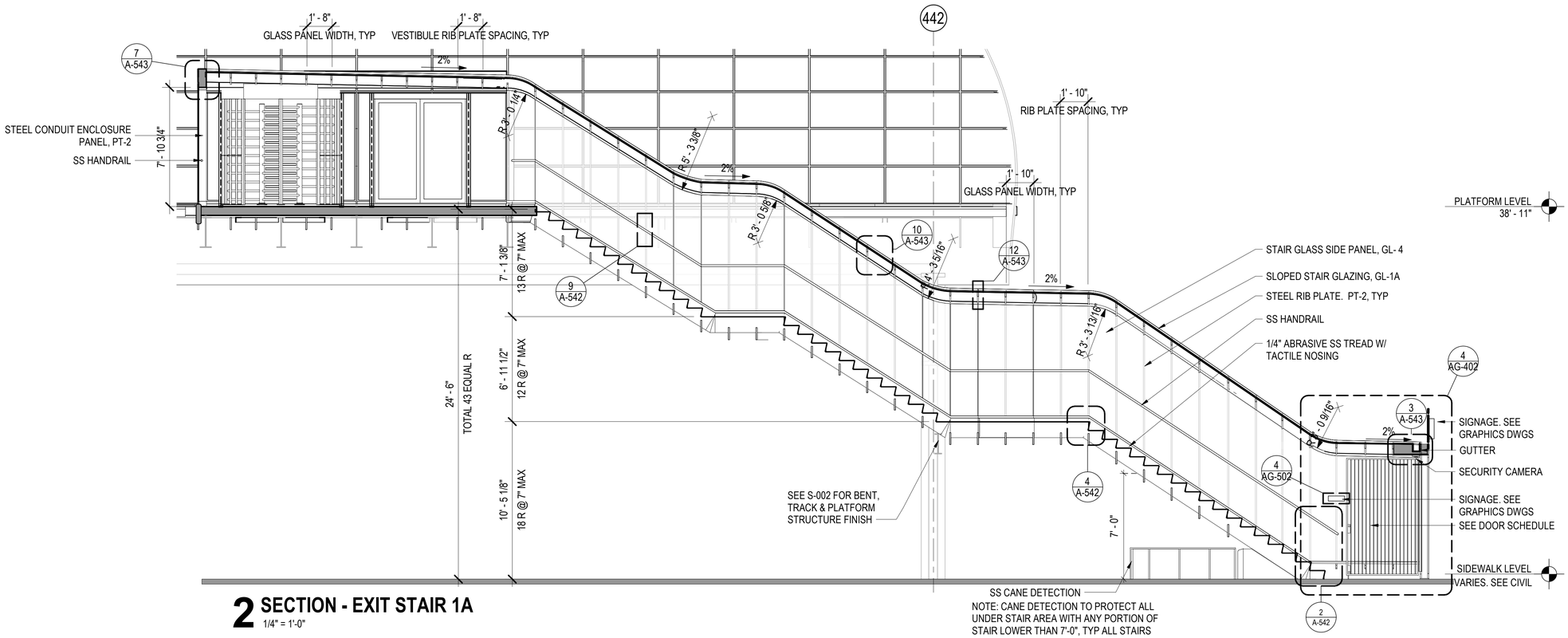

2 SECTION - EXIT STAIR 1A

1/4" = 1'-0"

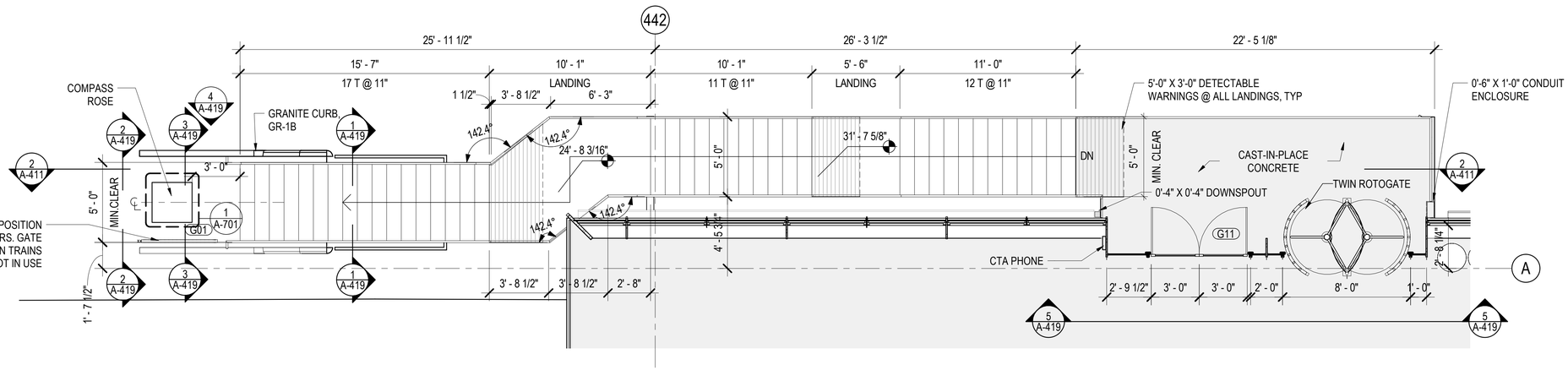

1 ENLARGED EXIT STAIR 1A PLAN

1/4" = 1'-0"

GENERAL STAIR NOTES:

1. FIELD VERIFY ALL SIDEWALK ELEVATIONS (EXISTING AND NEW); ADJUST RISER DIMENSIONS AS REQUIRED. PROVIDE EQUAL DIMENSIONS AT ALL RISERS OF AN INDIVIDUAL STAIR RUN FROM SIDEWALK TO PLATFORM.
2. ALL BRAILLE SIGNAGE TO BE MOUNTED ON RIGHT SIDE RELATIVE TO DIRECTION OF TRAVEL. REFER TO GRAPHICS DETAILS.

DESIGN BY:										
DRAWN BY:		4	7/3/2023	ISSUED FOR BID						
CHECKED BY:										
APPROVED BY:		0	9/9/2022	ISSUED FOR PERMIT	MN	KH	SD			
CDOT/APPROVED BY:		NO.	DATE	REVISIONS	DES.	DRW.	CHK.	DCCO	CDOT	

TRANSYSTEMS
222 SOUTH RIVERSIDE PLAZA SUITE 610
CHICAGO, ILLINOIS 60606

SKIDMORE, OWINGS & MERRILL LLP
224 SOUTH MICHIGAN AVENUE, SUITE 1000
CHICAGO, ILLINOIS 60604

CHICAGO DEPARTMENT OF TRANSPORTATION
DIVISION OF ENGINEERING

STATE / LAKE LOOP ELEVATED STATION
200 NORTH STATE STREET, CHICAGO, IL 60601

EXIT STAIR 1A ENLARGED PLAN, ELEVATIONS & SECTIONS

CDOT PROJECT D-1-209 | DATE: 9/9/2022

SPEC. NO.

DRAWING NO. A-411

REVISION NO.

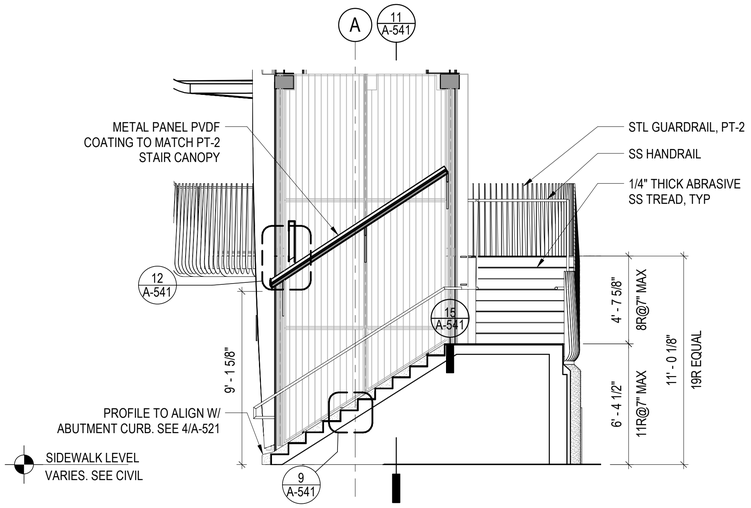

4 SECTION - STAIR 1B

1/4" = 1'-0"

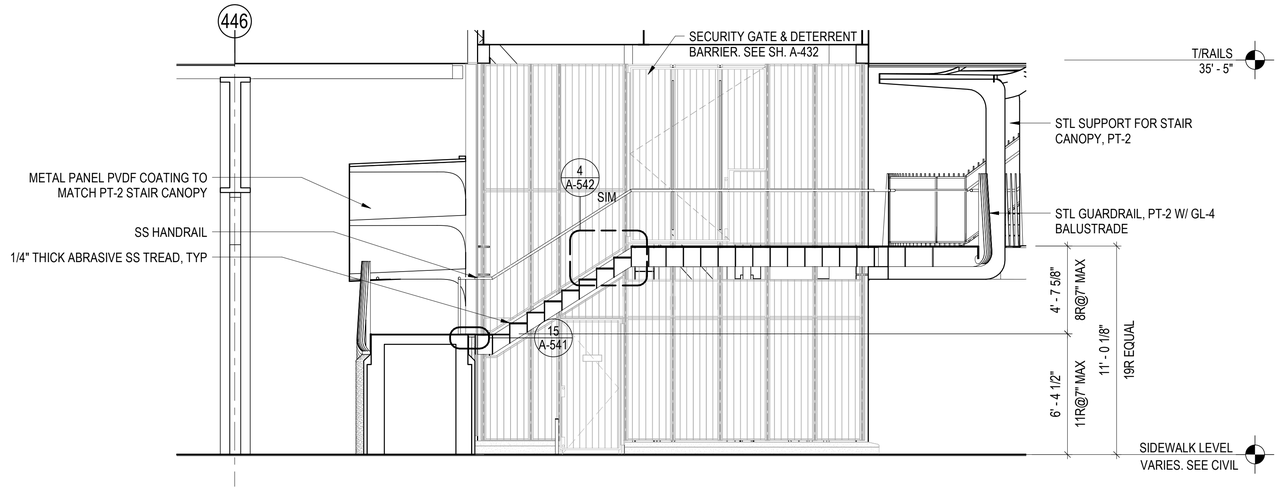

3 SECTION - STAIR 1B

1/4" = 1'-0"

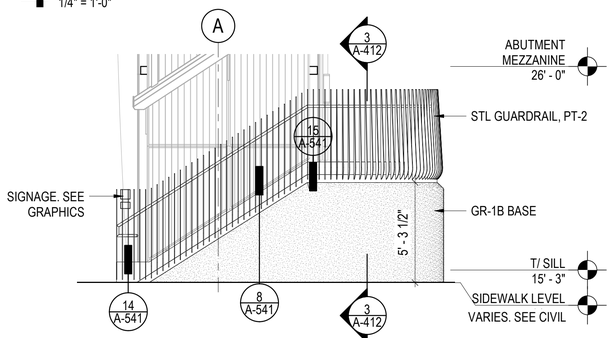

5 ELEVATION - STAIR 1B WEST

1/4" = 1'-0"

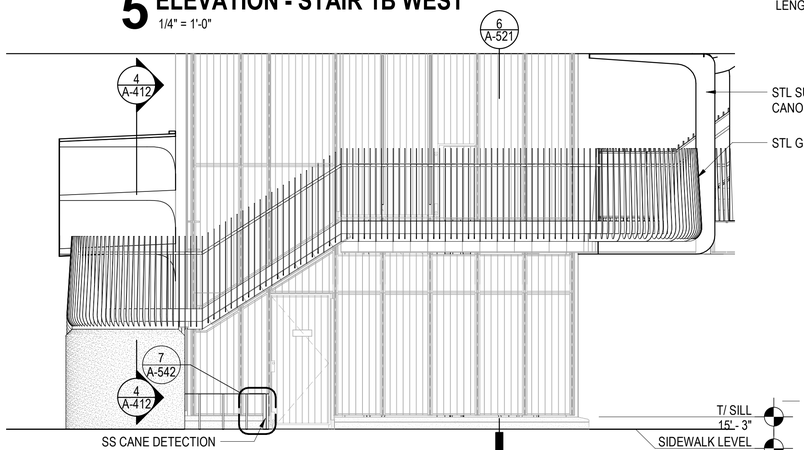

2 ELEVATION - STAIR 1B SOUTH

1/4" = 1'-0"

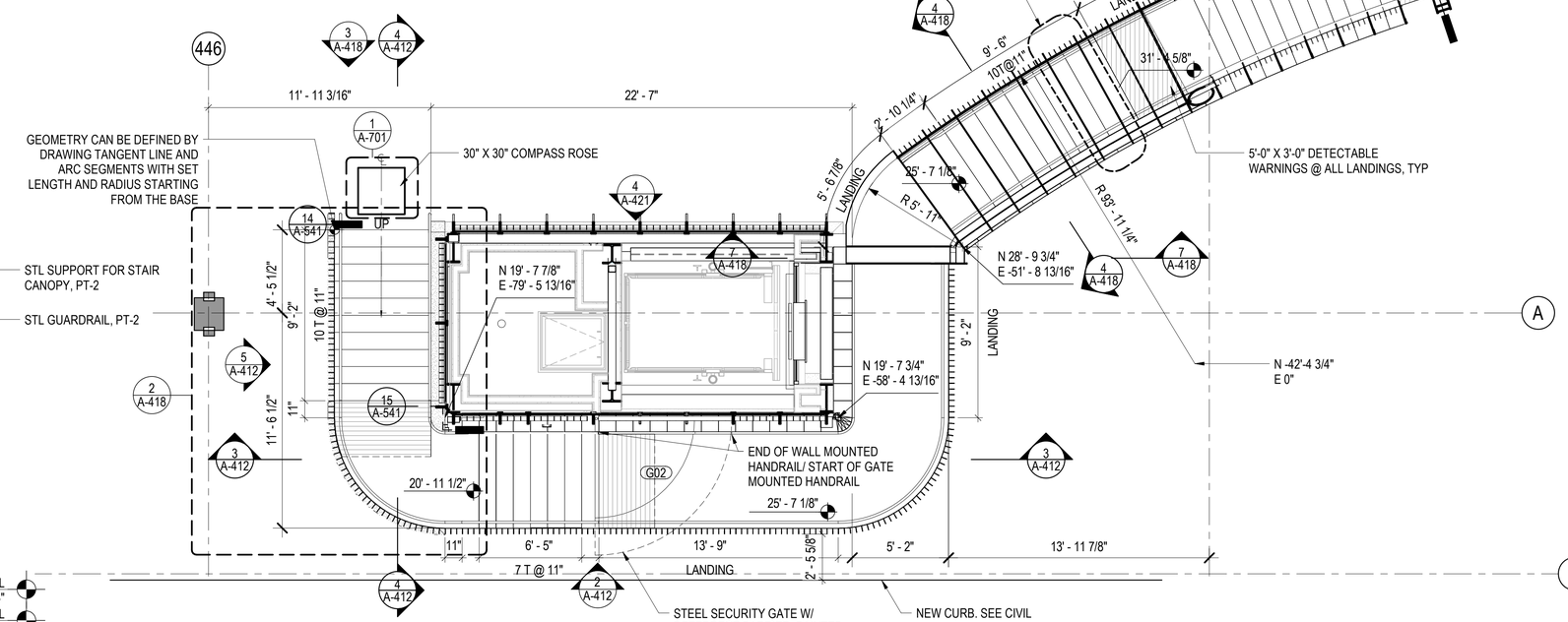

1 ENLARGED STAIR 1B PLAN

1/4" = 1'-0"

DESIGN BY:										
DRAWN BY:		4	7/3/2023	ISSUED FOR BID						
CHECKED BY:										
APPROVED BY:		0	9/9/2022	ISSUED FOR PERMIT	MN	KH	SD			
CDOT/APPROVED BY:		NO.	DATE	REVISIONS	DES.	DRW.	CHK.	DCCO	CDOT	

TRANSYSTEMS
222 SOUTH RIVERSIDE PLAZA SUITE 610
CHICAGO, ILLINOIS 60606

SKIDMORE, OWINGS & MERRILL LLP
224 SOUTH MICHIGAN AVENUE, SUITE 1000
CHICAGO, ILLINOIS 60604

CHICAGO DEPARTMENT
OF TRANSPORTATION
DIVISION OF ENGINEERING

STATE / LAKE LOOP ELEVATED STATION
200 NORTH STATE STREET, CHICAGO, IL 60601

SPEC. NO.

STAIR 1B ENLARGED PLAN, ELEVATIONS & SECTIONS

DRAWING NO.
A-412

CDOT PROJECT D-1-209

DATE: 9/9/2022

REVISION NO.

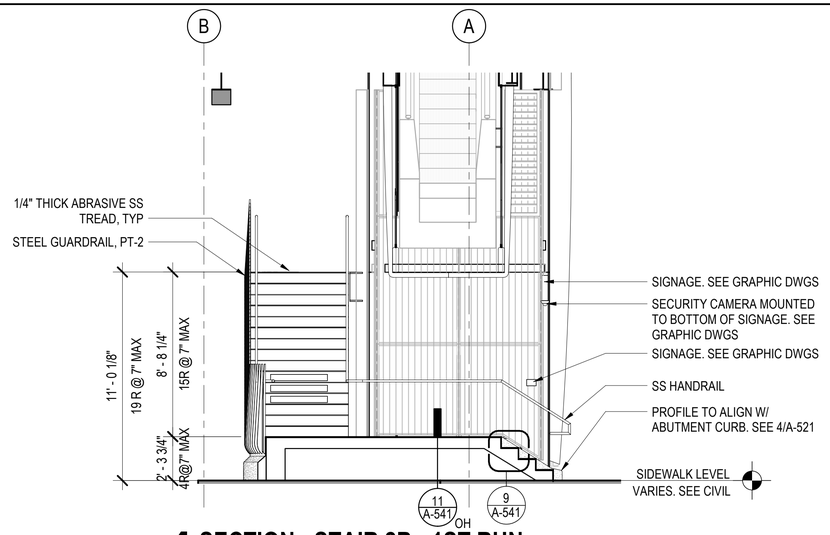

4 SECTION - STAIR 2B - 1ST RUN

1/4" = 1'-0"

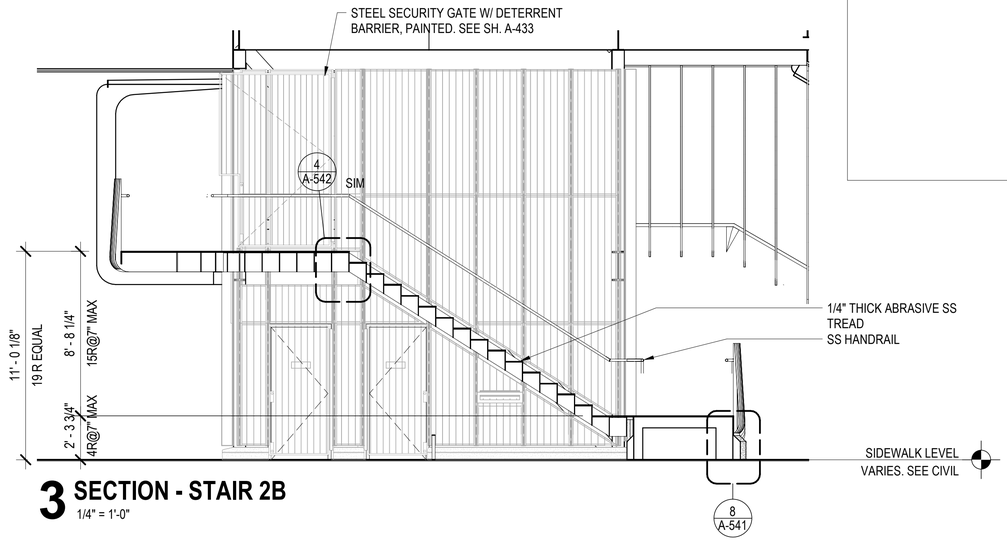

3 SECTION - STAIR 2B

1/4" = 1'-0"

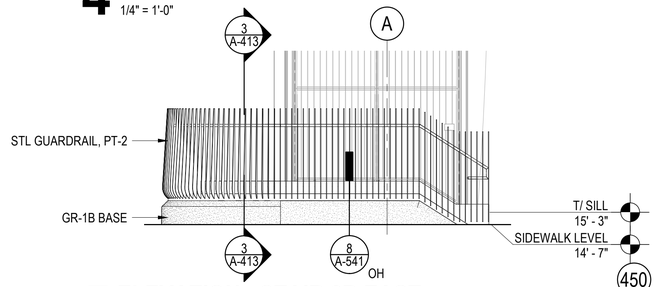

5 ELEVATION - STAIR 2B EAST

1/4" = 1'-0"

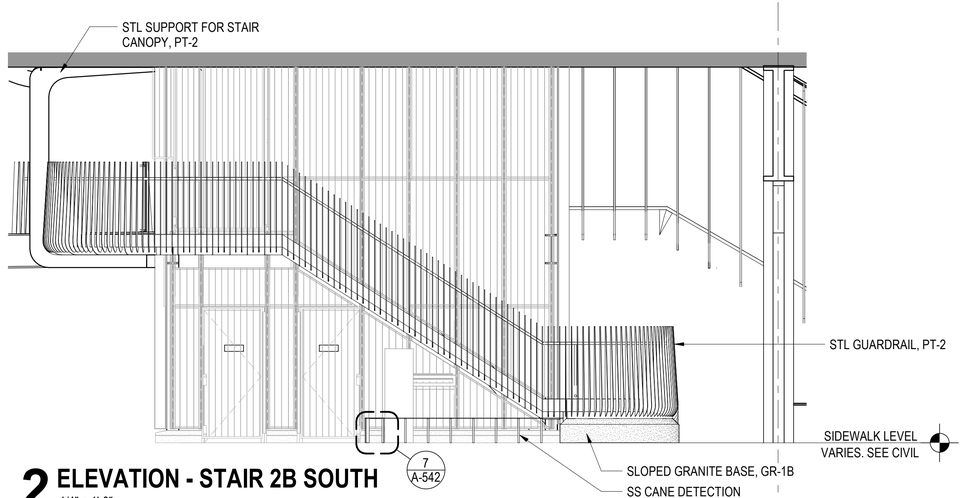

2 ELEVATION - STAIR 2B SOUTH

1/4" = 1'-0"

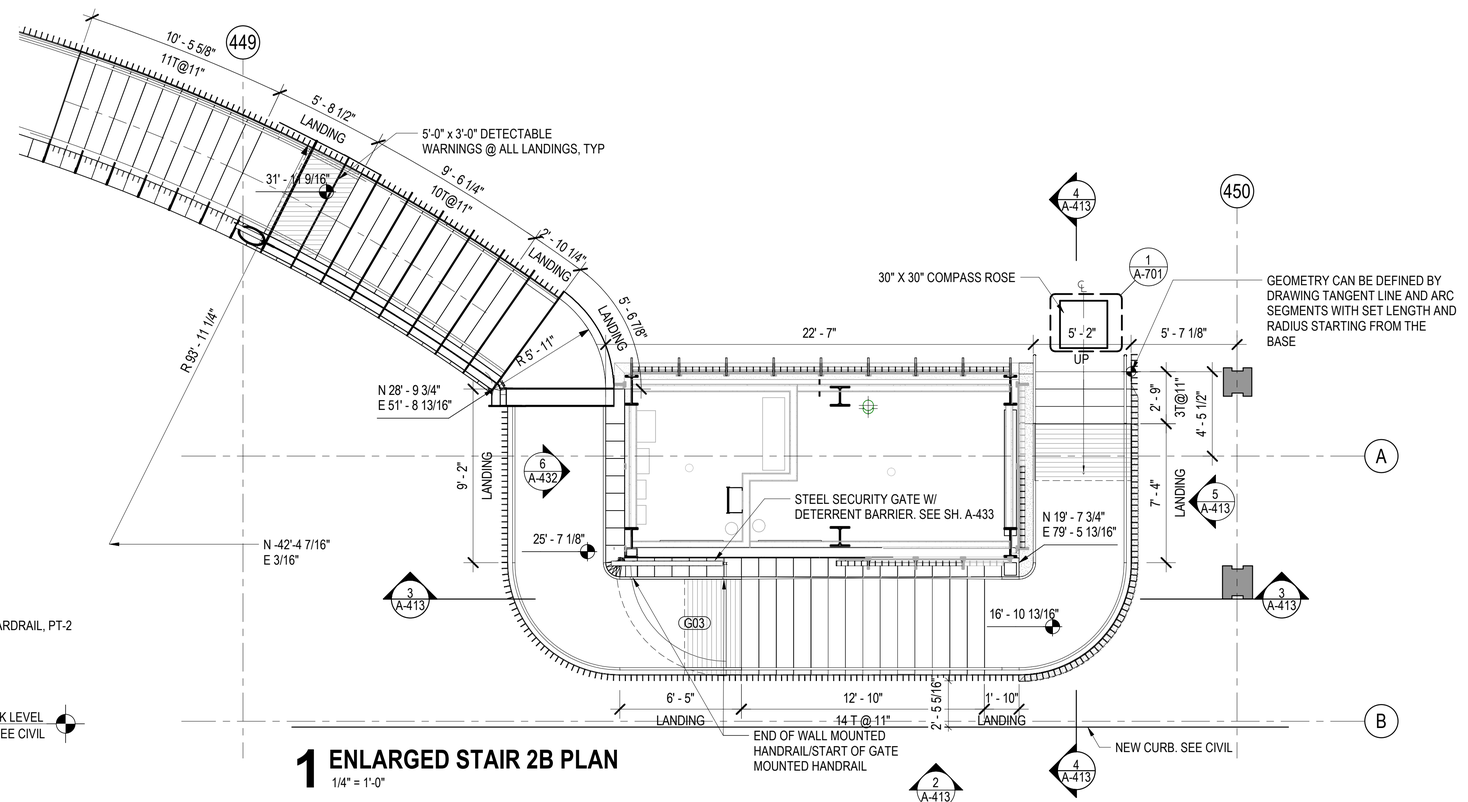

1 ENLARGED STAIR 2B PLAN

1/4" = 1'-0"

DESIGN BY:										
DRAWN BY:		4	7/3/2023	ISSUED FOR BID						
CHECKED BY:										
APPROVED BY:		0	9/9/2022	ISSUED FOR PERMIT	MN	KH	SD			
CDOT/APPROVED BY:		NO.	DATE	REVISIONS	DES.	DRW.	CHK.	DCCO	CDOT	

TRANSYSTEMS
222 SOUTH RIVERSIDE PLAZA SUITE 610
CHICAGO, ILLINOIS 60606

SKIDMORE, OWINGS & MERRILL LLP
224 SOUTH MICHIGAN AVENUE, SUITE 1000
CHICAGO, ILLINOIS 60604

CHICAGO DEPARTMENT OF TRANSPORTATION
DIVISION OF ENGINEERING

STATE / LAKE LOOP ELEVATED STATION
200 NORTH STATE STREET, CHICAGO, IL 60601

SPEC. NO.

STAIR 2B ENALRGED PLAN, ELEVATIONS & SECTIONS

DRAWING NO. A-413

CDOT PROJECT D-1-209 | DATE: 9/9/2022 | REVISION NO.

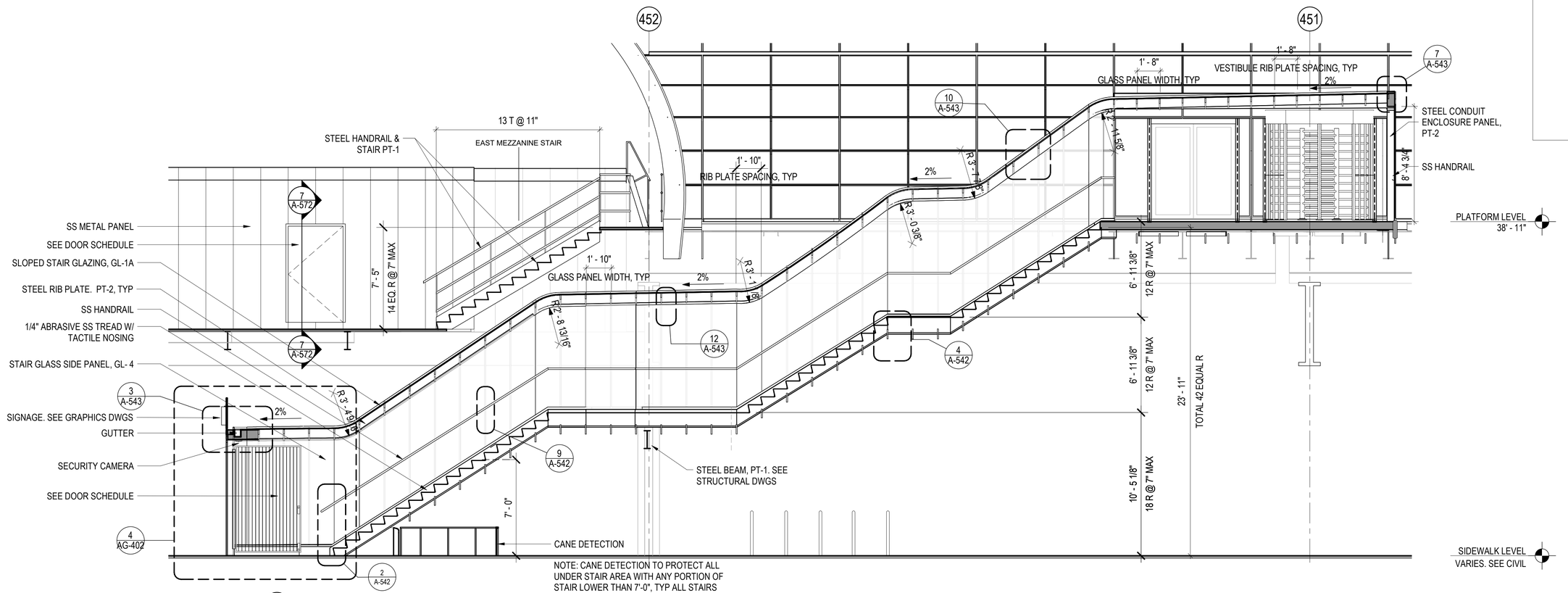

2 SECTION - EXIT STAIR 2A

1/4" = 1'-0"

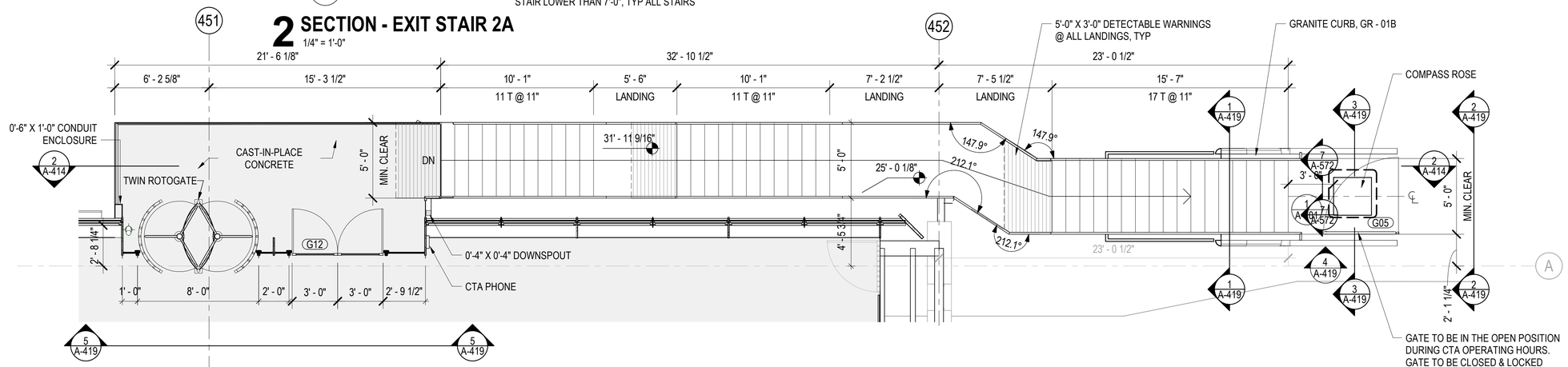

1 ENLARGED EXIT STAIR 2A PLAN

1/4" = 1'-0"

DESIGN BY:										
DRAWN BY:		4	7/3/2023	ISSUED FOR BID						
CHECKED BY:										
APPROVED BY:		0	9/9/2022	ISSUED FOR PERMIT	MN	KH	SD			
CDOT/APPROVED BY:		NO.	DATE	REVISIONS	DES.	DRW.	CHK.	DCCO	CDOT	

TRANSYSTEMS
222 SOUTH RIVERSIDE PLAZA SUITE 610
CHICAGO, ILLINOIS 60606

SKIDMORE, OWINGS & MERRILL LLP
224 SOUTH MICHIGAN AVENUE, SUITE 1000
CHICAGO, ILLINOIS 60604

CHICAGO DEPARTMENT OF TRANSPORTATION
DIVISION OF ENGINEERING

STATE / LAKE LOOP ELEVATED STATION
200 NORTH STATE STREET, CHICAGO, IL 60601

SPEC. NO.

EXIT STAIR 2A & EAST MEZZANINE STAIR ENLARGED PLAN, ELEVATIONS & SECTIONS

DRAWING NO. A-414

CDOT PROJECT D-1-209

DATE: 9/9/2022

REVISION NO.

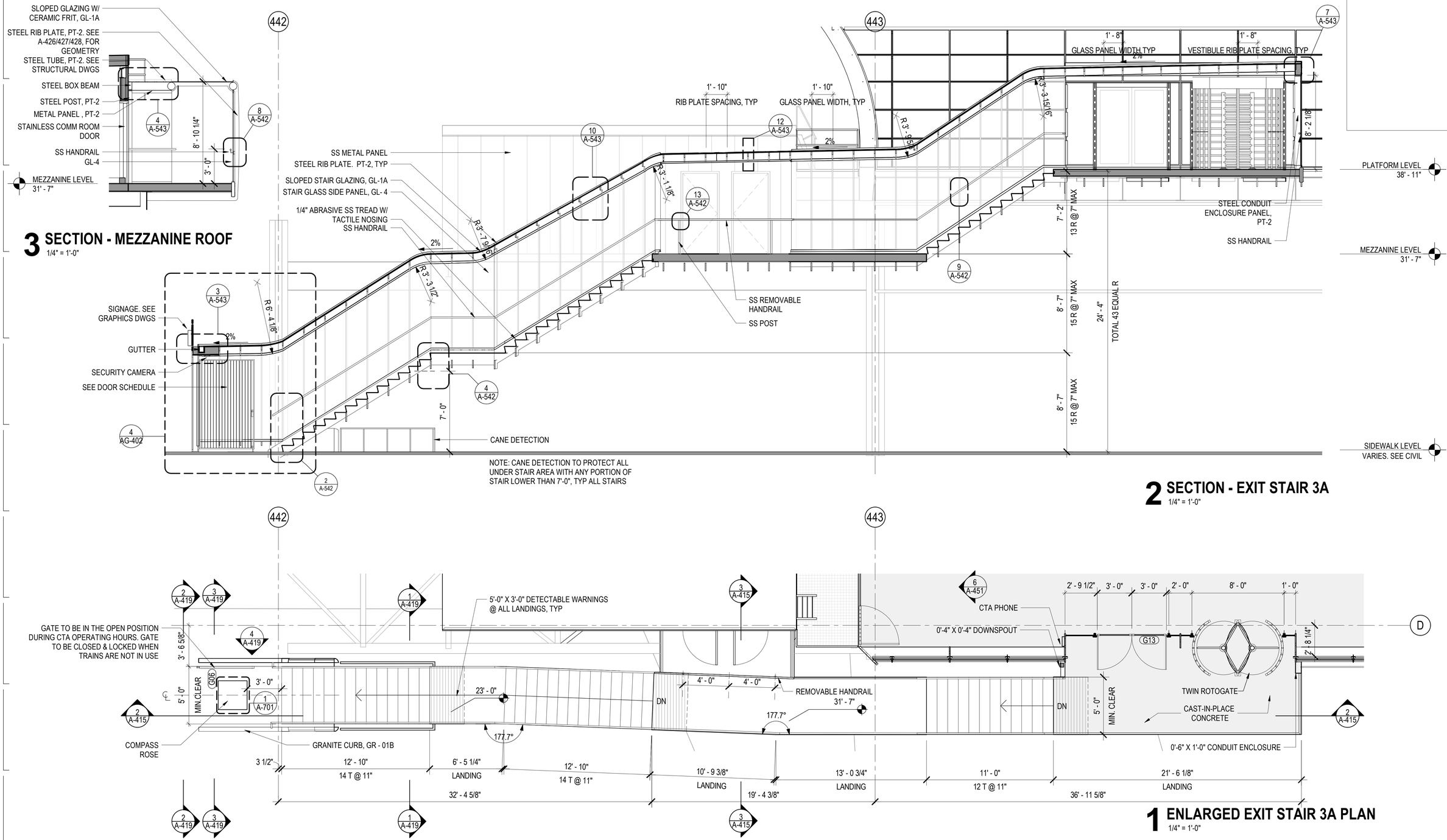

3 SECTION - MEZZANINE ROOF
1/4" = 1'-0"

2 SECTION - EXIT STAIR 3A
1/4" = 1'-0"

1 ENLARGED EXIT STAIR 3A PLAN
1/4" = 1'-0"

DESIGN BY:									
DRAWN BY:		4	7/3/2023	ISSUED FOR BID					
CHECKED BY:									
APPROVED BY:		0	9/9/2022	ISSUED FOR PERMIT	MN	KH	SD		
CDOT/APPROVED BY:		NO.	DATE	REVISIONS	DES.	DRW.	CHK.	DCCO	CDOT

TRANSYSTEMS
222 SOUTH RIVERSIDE PLAZA SUITE 610
CHICAGO, ILLINOIS 60606

SKIDMORE, OWINGS & MERRILL LLP
224 SOUTH MICHIGAN AVENUE, SUITE 1000
CHICAGO, ILLINOIS 60604

CHICAGO DEPARTMENT OF TRANSPORTATION
DIVISION OF ENGINEERING

STATE / LAKE LOOP ELEVATED STATION
200 NORTH STATE STREET, CHICAGO, IL 60601

EXIT STAIR 3A & WEST MEZZANINE STAIR ENLARGED PLANS, ELEVATIONS & SECTIONS

CDOT PROJECT D-1-209 | DATE: 9/9/2022

SPEC. NO.

DRAWING NO. A-415

REVISION NO.

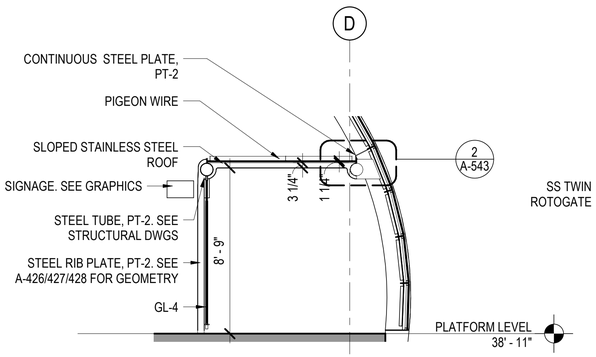

3 SECTION - EXIT STAIR 4A VESTIBULE

1/4" = 1'-0"

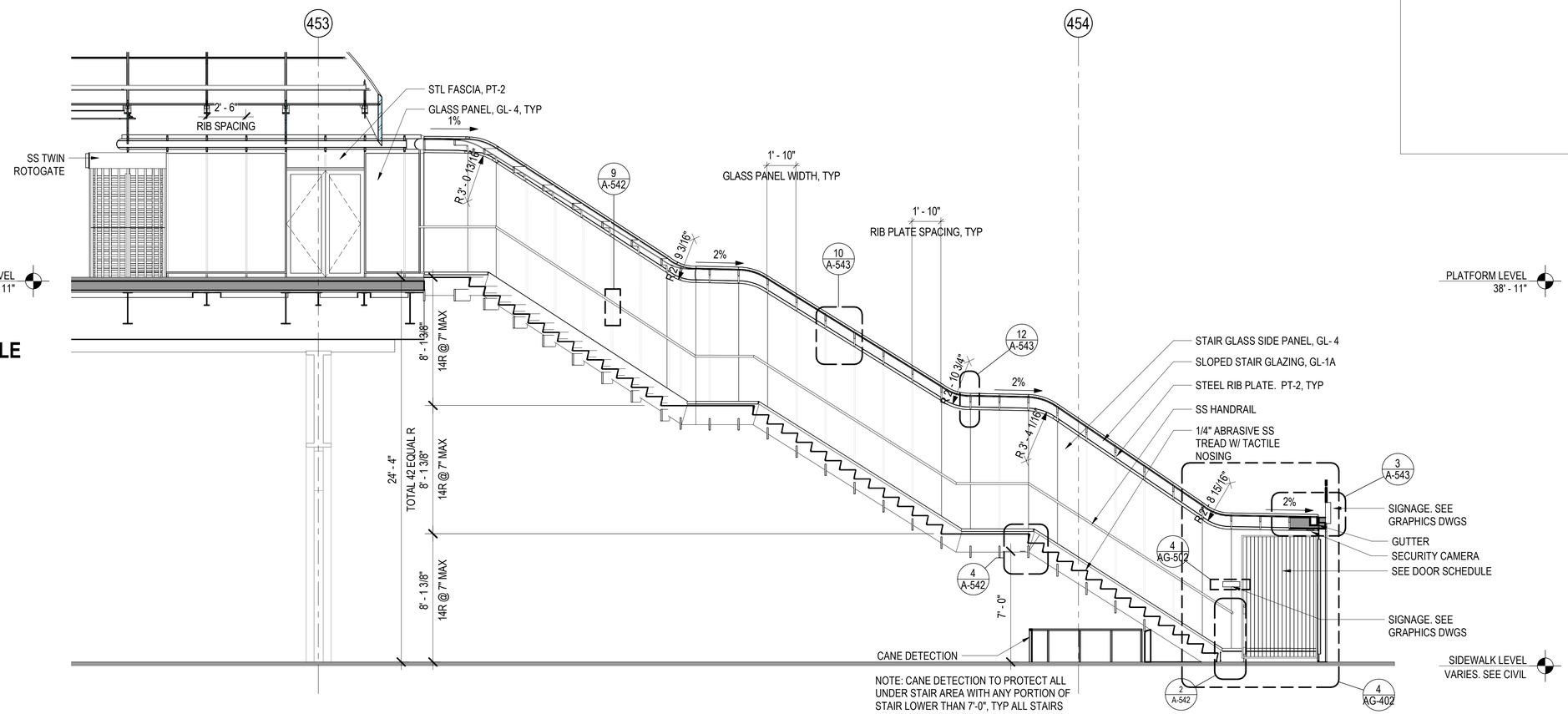

2 SECTION - EXIT STAIR 4A

1/4" = 1'-0"

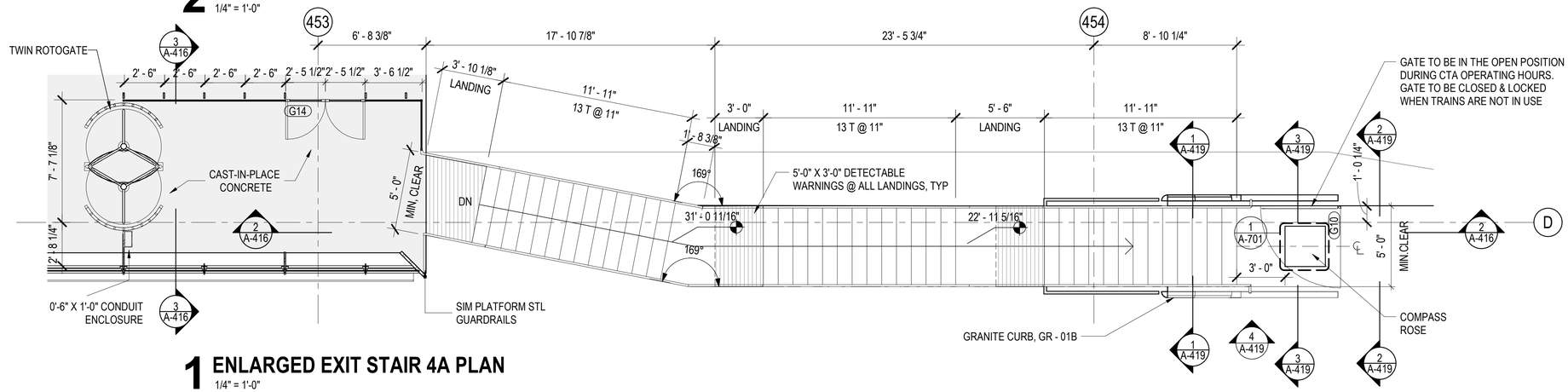

1 ENLARGED EXIT STAIR 4A PLAN

1/4" = 1'-0"

DESIGN BY:										
DRAWN BY:		4	7/3/2023	ISSUED FOR BID						
CHECKED BY:										
APPROVED BY:		0	9/9/2022	ISSUED FOR PERMIT	MN	KH	SD			
CDOT/APPROVED BY:		NO.	DATE	REVISIONS	DES.	DRW.	CHK.	DCCO	CDOT	

TRANSYSTEMS
222 SOUTH RIVERSIDE PLAZA SUITE 610
CHICAGO, ILLINOIS 60606

SKIDMORE, OWINGS & MERRILL LLP
224 SOUTH MICHIGAN AVENUE, SUITE 1000
CHICAGO, ILLINOIS 60604

CHICAGO DEPARTMENT OF TRANSPORTATION
DIVISION OF ENGINEERING

STATE / LAKE LOOP ELEVATED STATION
200 NORTH STATE STREET, CHICAGO, IL 60601

SPEC. NO.

EXIT STAIR 4A ENLARGED PLAN, ELEVATIONS & SECTIONS

DRAWING NO. A-416

CDOT PROJECT D-1-209 | DATE: 9/9/2022 | REVISION NO.

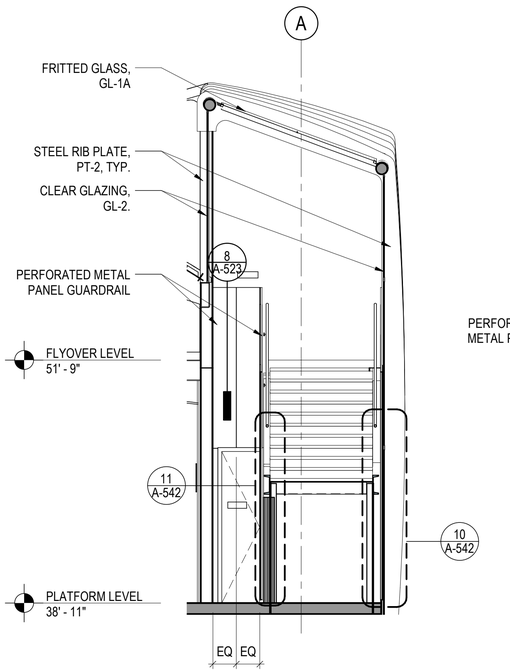

4 SECTION - FLYOVER STAIR 1
1/4" = 1'-0"

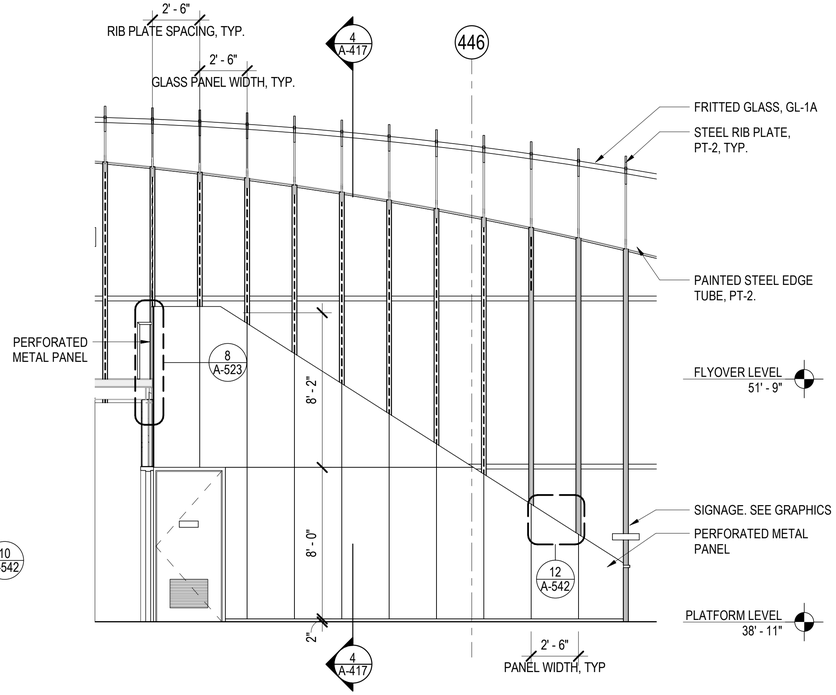

3 ELEVATION - FLYOVER STAIR
1/4" = 1'-0"

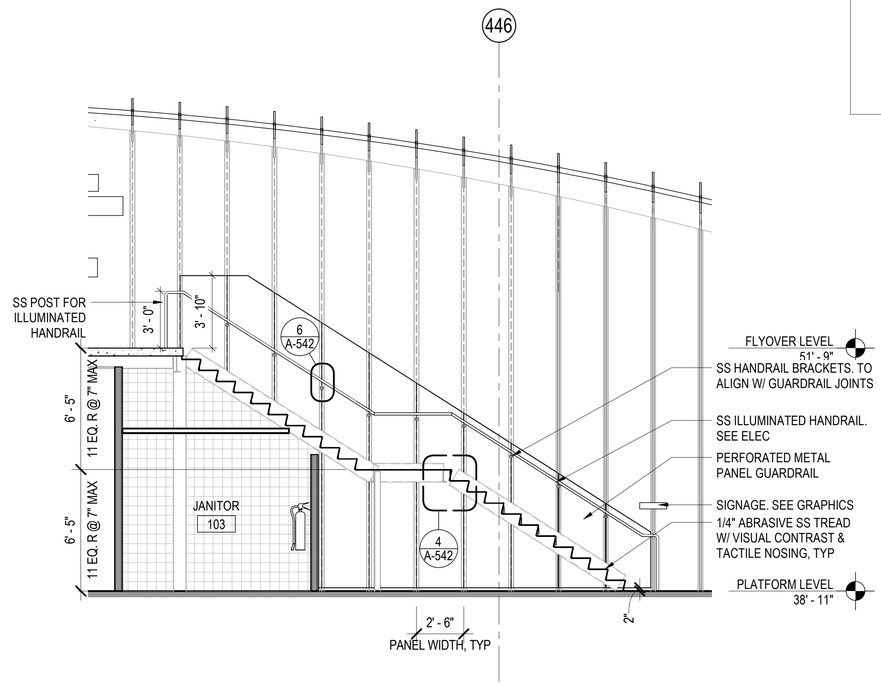

2 SECTION - FLYOVER STAIR
1/4" = 1'-0"

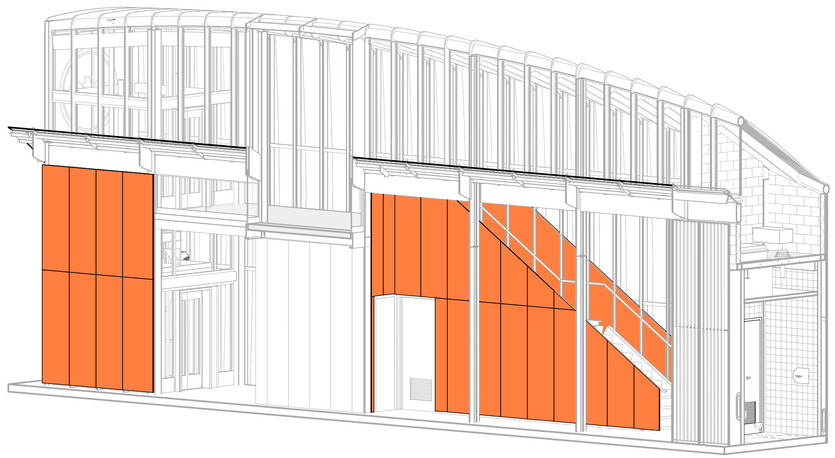

5 PERFORATED METAL LOCATIONS

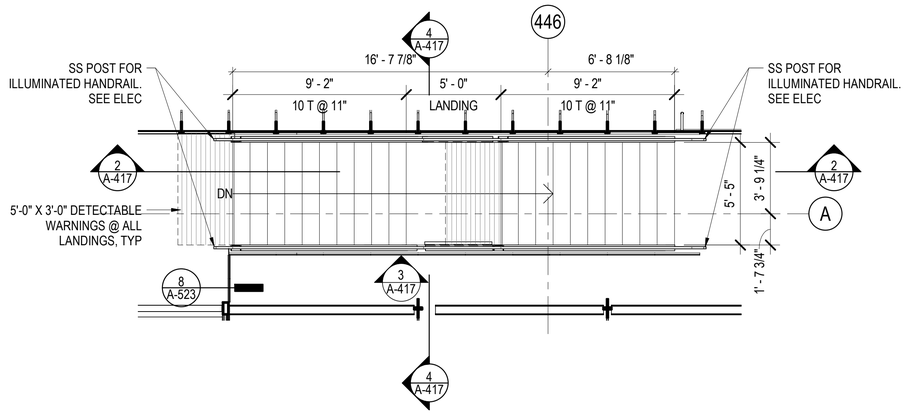

1 ENLARGED FLYOVER STAIR 1 PLAN
1/4" = 1'-0"

DESIGN BY:										
DRAWN BY:		4	7/3/2023	ISSUED FOR BID						
CHECKED BY:										
APPROVED BY:		0	9/9/2022	ISSUED FOR PERMIT	MN	KH	SD			
CDOT/APPROVED BY:		NO.	DATE	REVISIONS	DES.	DRW.	CHK.	DCCO	CDOT	

TranSystems
TRANSYSTEMS
222 SOUTH RIVERSIDE PLAZA SUITE 610
CHICAGO, ILLINOIS 60606

SOM
SKIDMORE, OWINGS & MERRILL LLP
224 SOUTH MICHIGAN AVENUE, SUITE 1000
CHICAGO, ILLINOIS 60604

CDOT
CHICAGO DEPARTMENT OF TRANSPORTATION
DIVISION OF ENGINEERING

STATE / LAKE LOOP ELEVATED STATION
200 NORTH STATE STREET, CHICAGO, IL 60601

FLYOVER STAIR ENLARGED PLANS, ELEVATIONS & SECTIONS

CDOT PROJECT D-1-209

DATE: 9/9/2022

SPEC. NO.

DRAWING NO. A-417

REVISION NO.

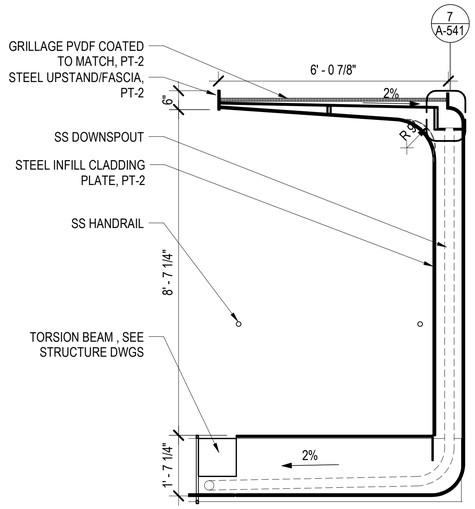

7 SECTION - FEATURE STAIR @ CANOPY PAN
1/2" = 1'-0"

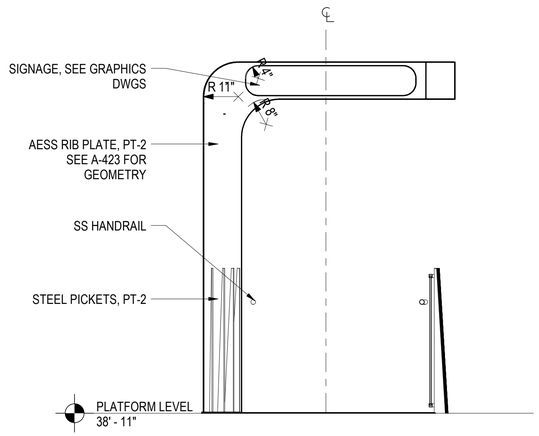

6 ELEVATION - FEATURE STAIR TOP
1/2" = 1'-0"

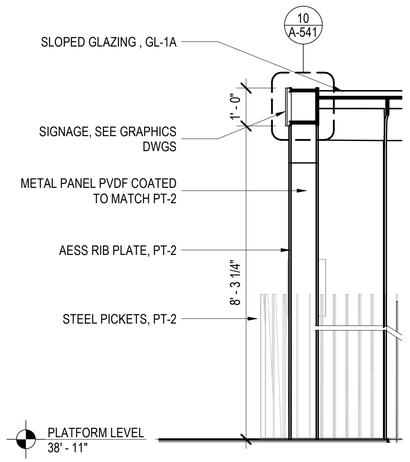

5 SECTION - FEATURE STAIR TOP
1/2" = 1'-0"

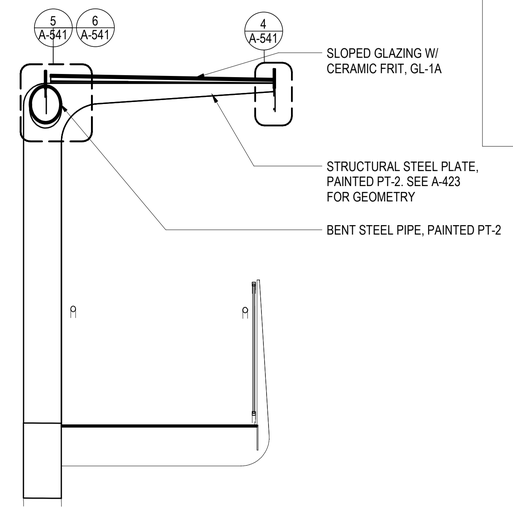

4 SECTION - FEATURE STAIR TYP CANOPY
1/2" = 1'-0"

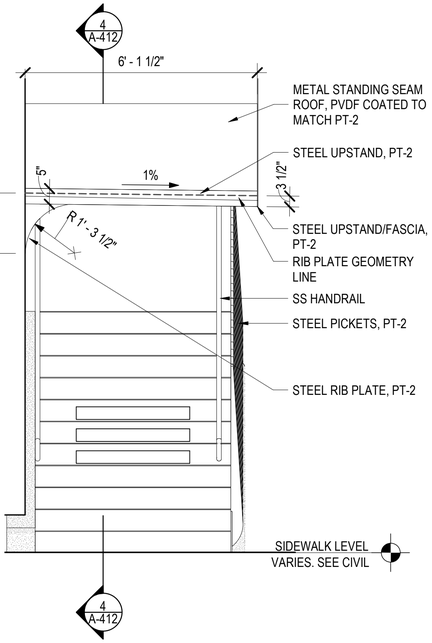

3 ELEVATION - FEATURE STAIR (WEST) CANOPY AT BOTTOM
1/2" = 1'-0"

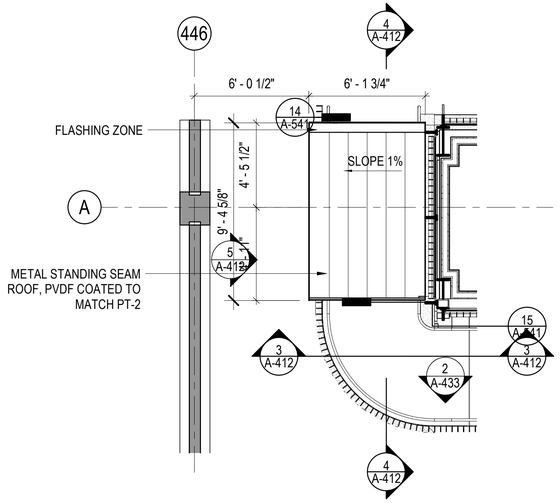

2 ENLARGED FEATURE STAIR (WEST) CANOPY AT BOTTOM
1/4" = 1'-0"

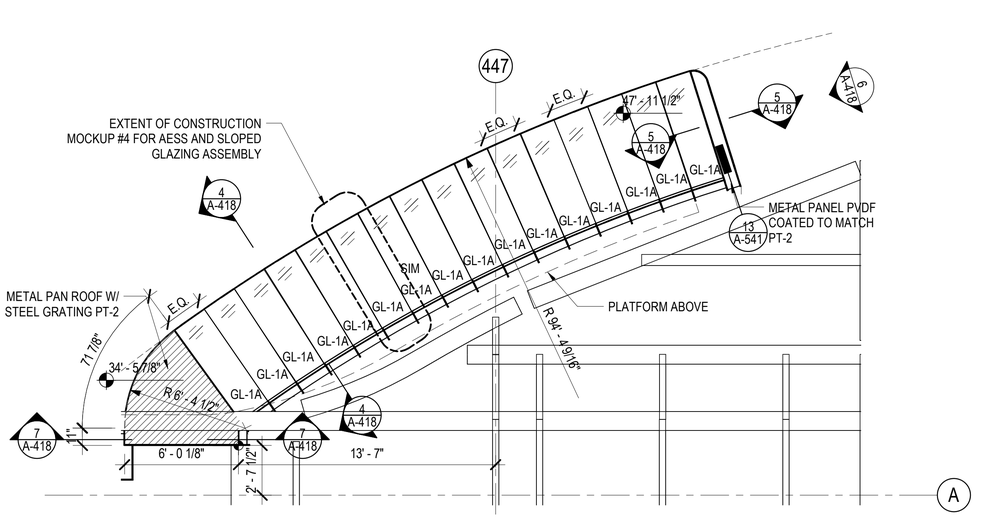

1 ENLARGED FEATURE STAIR CANOPY PLAN
1/4" = 1'-0"

DESIGN BY:										
DRAWN BY:		4	7/3/2023	ISSUED FOR BID						
CHECKED BY:										
APPROVED BY:		0	9/9/2022	ISSUED FOR PERMIT	MN	KH	SD			
CDOT/APPROVED BY:		NO.	DATE	REVISIONS	DES.	DRW.	CHK.	DCCO	CDOT	

TRANSYSTEMS
222 SOUTH RIVERSIDE PLAZA SUITE 610
CHICAGO, ILLINOIS 60606

SKIDMORE, OWINGS & MERRILL LLP
224 SOUTH MICHIGAN AVENUE, SUITE 1000
CHICAGO, ILLINOIS 60604

CHICAGO DEPARTMENT OF TRANSPORTATION
DIVISION OF ENGINEERING

STATE / LAKE LOOP ELEVATED STATION
200 NORTH STATE STREET, CHICAGO, IL 60601

SPEC. NO.

FEATURE STAIR CANOPY ENLARGED PLANS & SECTIONS

DRAWING NO. A-418

CDOT PROJECT D-1-209

DATE: 9/9/2022

REVISION NO.

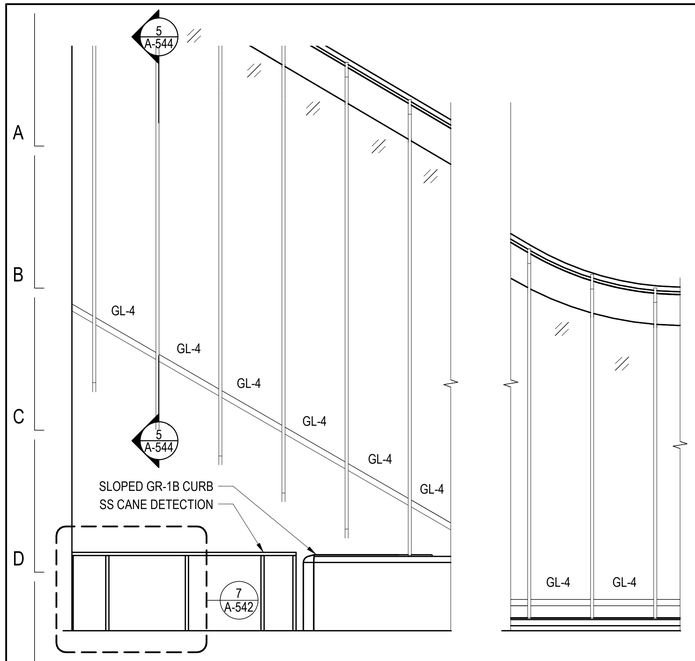

7 ELEVATION - ESCALATOR BASE
1/2" = 1'-0"

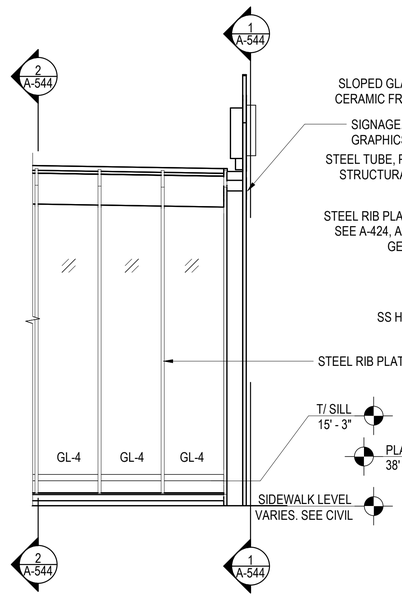

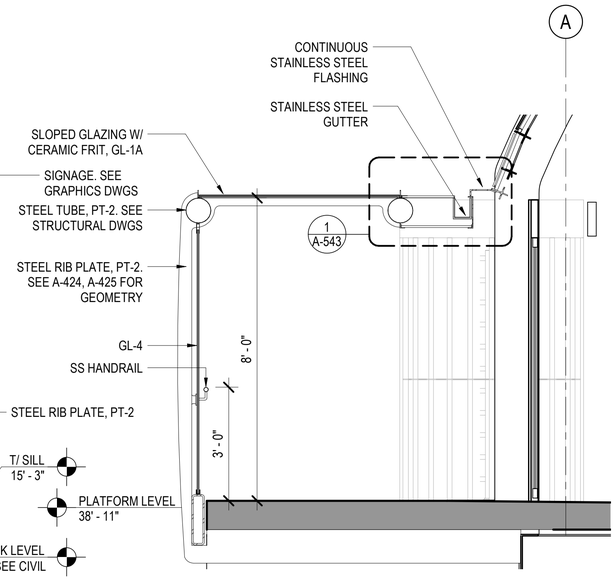

6 SECTION - TYP EXIT VESTIBULE
1/2" = 1'-0"

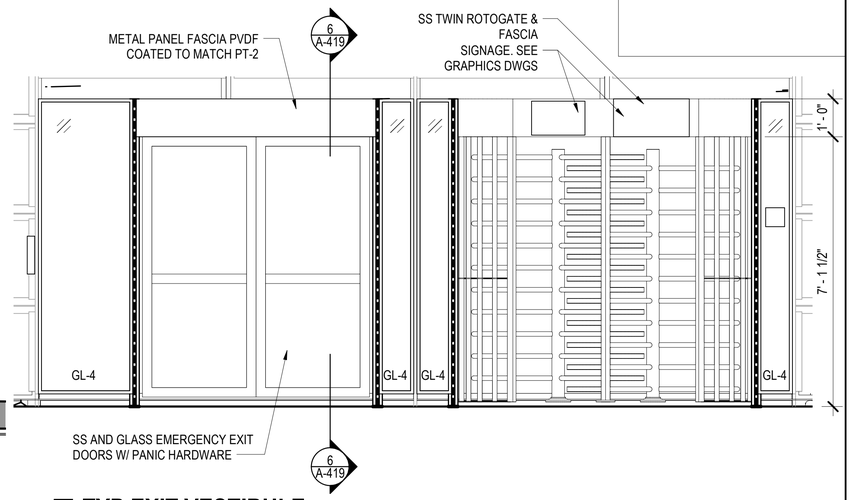

5 TYP EXIT VESTIBULE
1/2" = 1'-0"

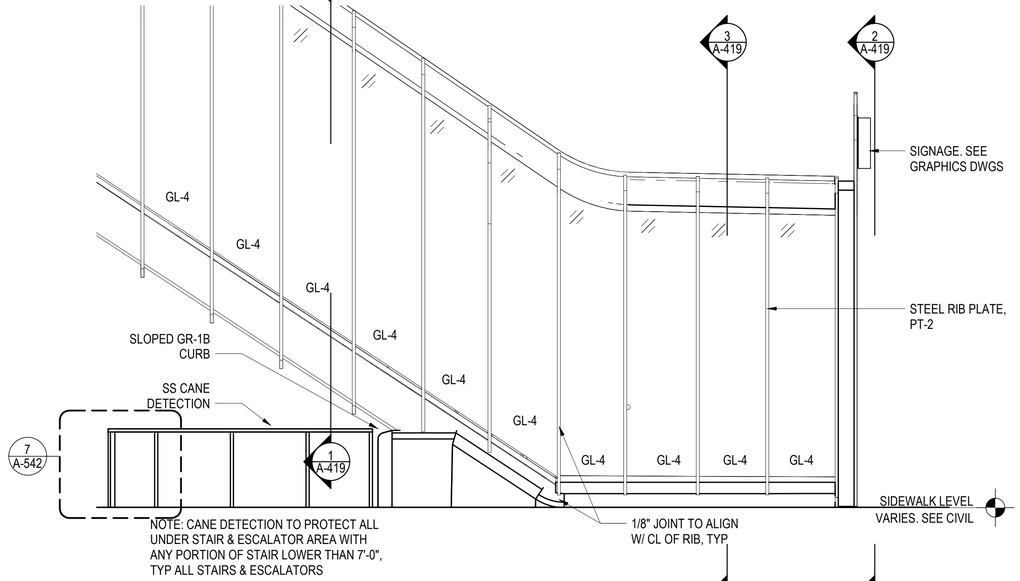

4 ELEVATION - TYP EXIT STAIR @ BASE
1/2" = 1'-0"

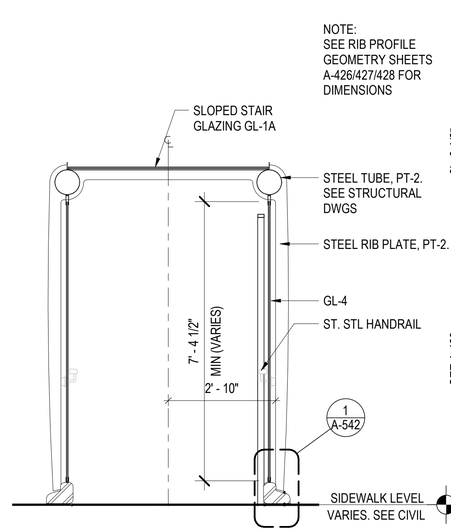

3 SECTION - TYP EXIT STAIR PORTAL
1/2" = 1'-0"

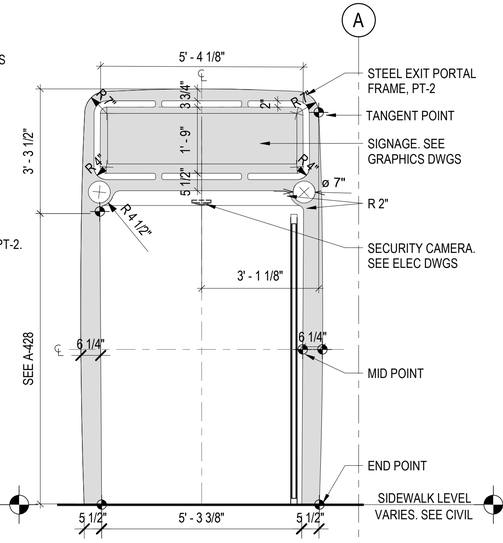

2 ELEVATION - TYP EXIT STAIR PORTAL
1/2" = 1'-0"

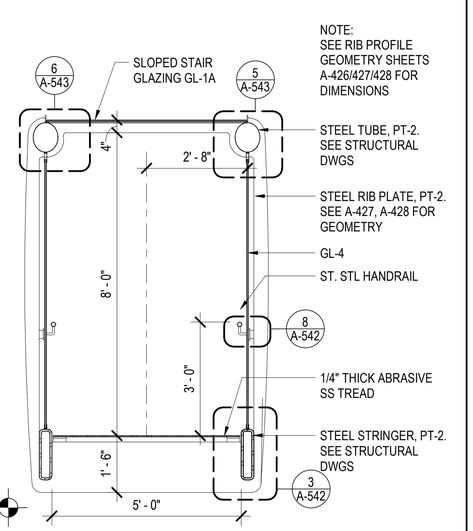

1 SECTION - TYP EXIT STAIR
1/2" = 1'-0"

DESIGN BY:										
DRAWN BY:		4	7/3/2023	ISSUED FOR BID						
CHECKED BY:										
APPROVED BY:		0	9/9/2022	ISSUED FOR PERMIT	MN	KH	SD			
CDOT/APPROVED BY:		NO.	DATE	REVISIONS	DES.	DRW.	CHK.	DCCO	CDOT	

TRANSYSTEMS
222 SOUTH RIVERSIDE PLAZA SUITE 610
CHICAGO, ILLINOIS 60606

SKIDMORE, OWINGS & MERRILL LLP
224 SOUTH MICHIGAN AVENUE, SUITE 1000
CHICAGO, ILLINOIS 60604

CHICAGO DEPARTMENT OF TRANSPORTATION
DIVISION OF ENGINEERING

STATE / LAKE LOOP ELEVATED STATION
200 NORTH STATE STREET, CHICAGO, IL 60601

SPEC. NO.

TYP STAIR & ESCALATOR ENLARGED SECTIONS & ELEVATIONS

DRAWING NO. A-419

CDOT PROJECT D-1-209 | DATE: 9/9/2022 | REVISION NO.

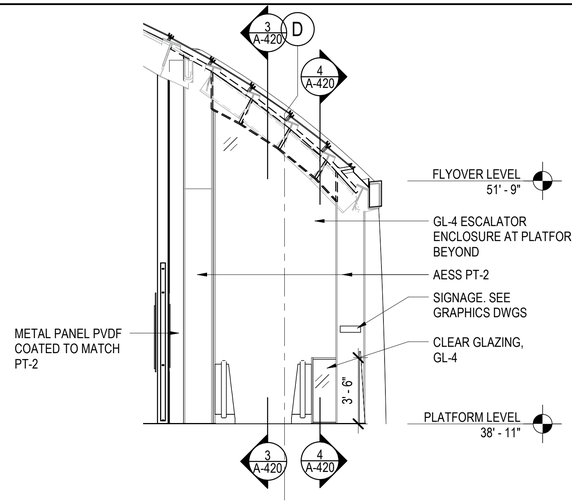

5 ELEVATION - ESCALATOR PLATFORM
1/4" = 1'-0"

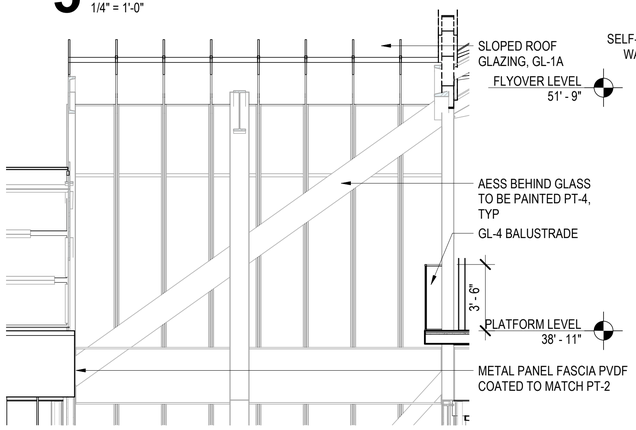

4 SECTION - ESCALATOR
1/4" = 1'-0"

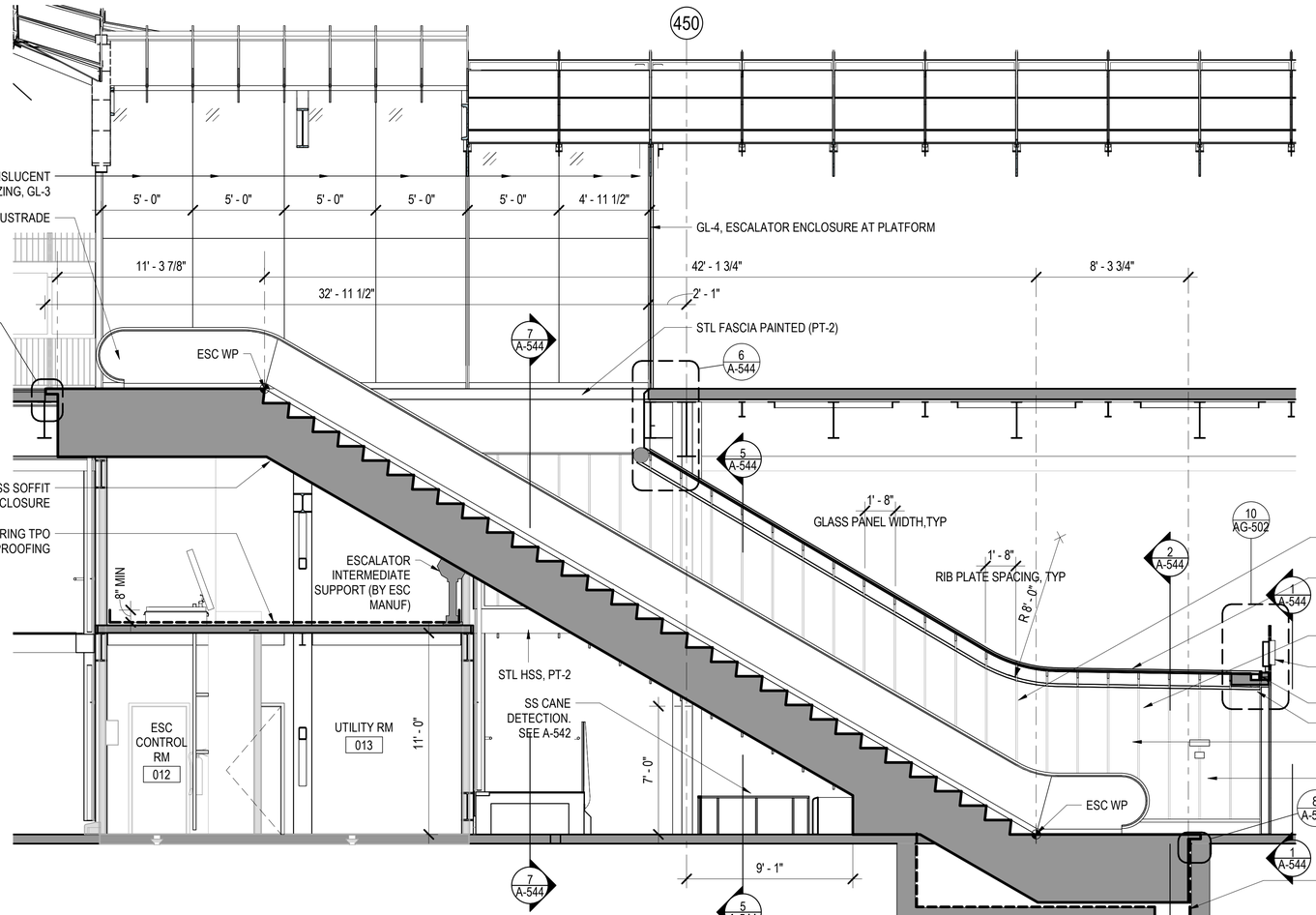

3 SECTION-ESCALATOR
1/4" = 1'-0"

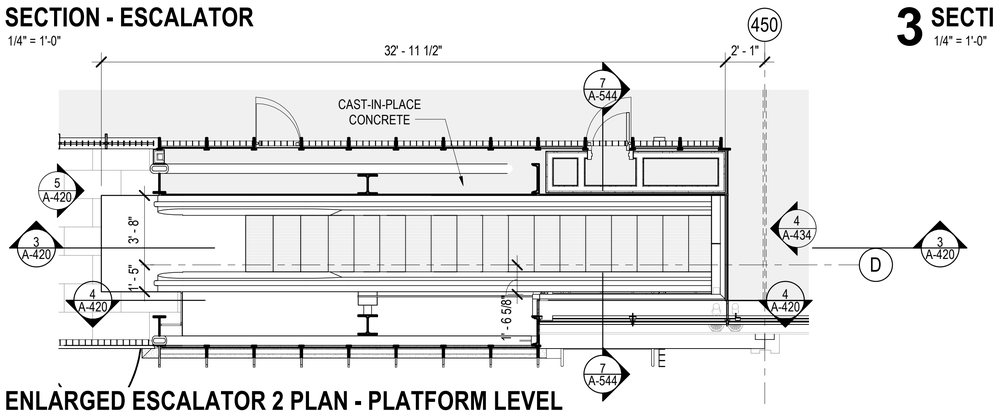

2 ENLARGED ESCALATOR 2 PLAN - PLATFORM LEVEL
1/4" = 1'-0"

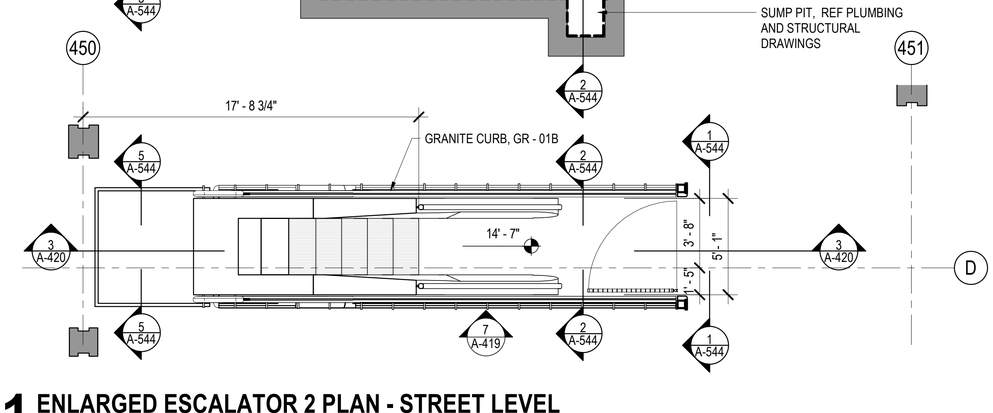

1 ENLARGED ESCALATOR 2 PLAN - STREET LEVEL
1/4" = 1'-0"

DESIGN BY:									
DRAWN BY:		4	7/3/2023	ISSUED FOR BID					
CHECKED BY:		1	11/4/2022	ISSUED FOR PERMIT REVISION 1					
APPROVED BY:		0	9/9/2022	ISSUED FOR PERMIT	MN	KH	SD		
CDOT/APPROVED BY:		NO.	DATE	REVISIONS	DES.	DRW.	CHK.	DCCO	CDOT

TRANSYSTEMS
222 SOUTH RIVERSIDE PLAZA SUITE 610
CHICAGO, ILLINOIS 60606

SKIDMORE, OWINGS & MERRILL LLP
224 SOUTH MICHIGAN AVENUE, SUITE 1000
CHICAGO, ILLINOIS 60604

CHICAGO DEPARTMENT OF TRANSPORTATION
DIVISION OF ENGINEERING

STATE / LAKE LOOP ELEVATED STATION
200 NORTH STATE STREET, CHICAGO, IL 60601

SPEC. NO.

ESCALATOR 1 ENLARGED PLANS, ELEVATIONS & SECTIONS

DRAWING NO. A-420

CDOT PROJECT D-1-209 | DATE: 9/9/2022 | REVISION NO. 1

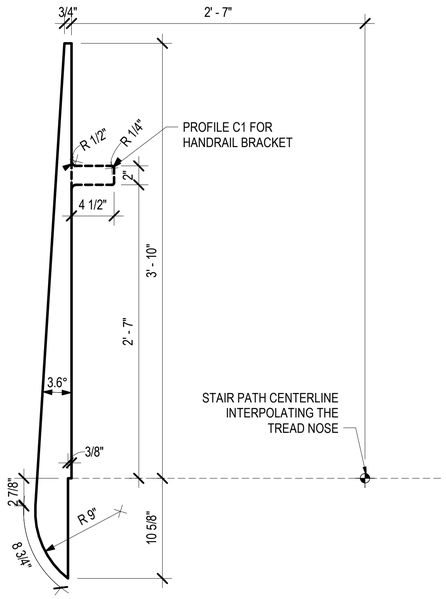

6 RIB PROFILE - TYPE C/C1
1 1/2" = 1'-0"

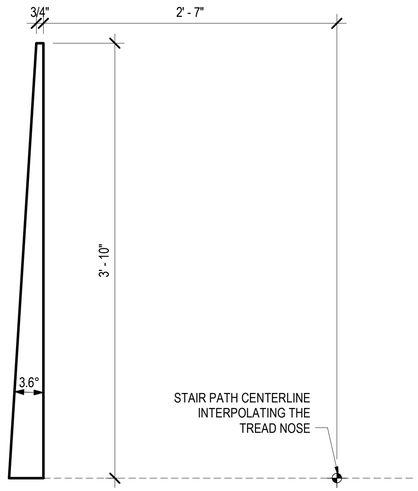

5 RIB PROFILE - TYPE D
1 1/2" = 1'-0"

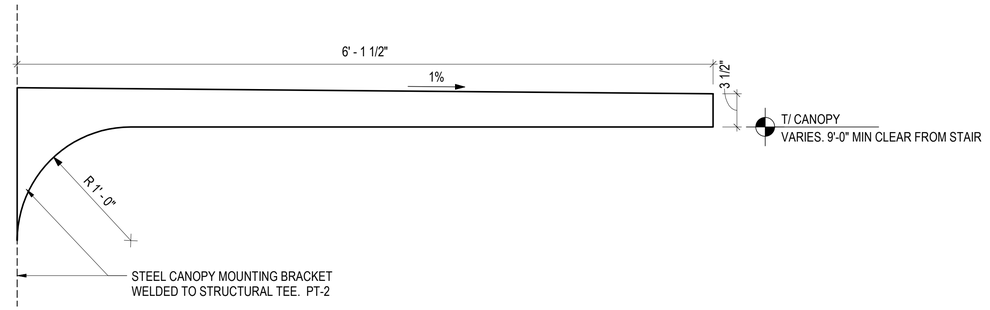

4 CANOPY BRACKET PROFILE - TYPE J
1 1/2" = 1'-0"

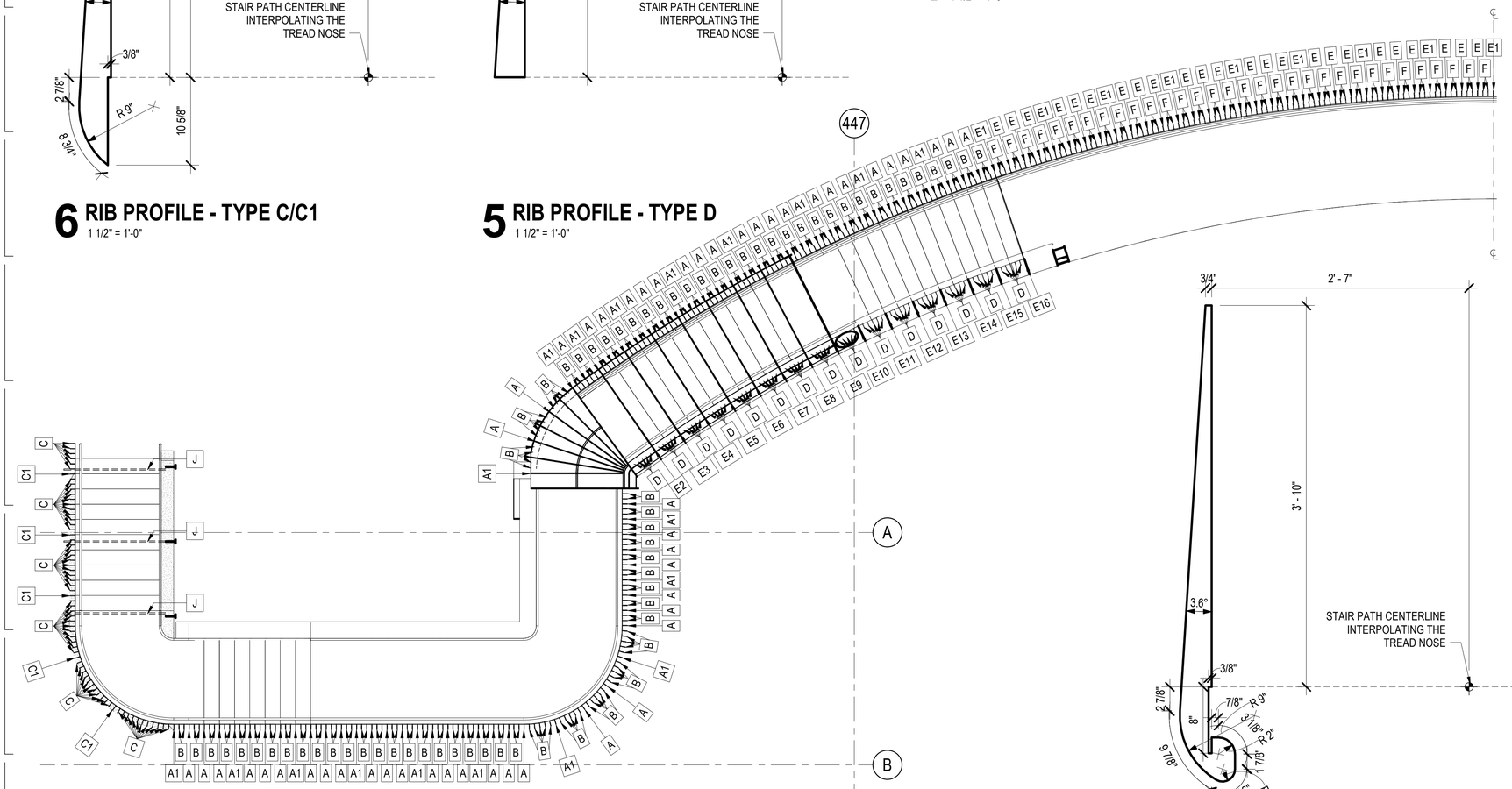

3 ENLARGED STAIR 1B RIB PROFILE KEYPLAN
1/4" = 1'-0"

2 RIB PROFILE - TYPE B
1 1/2" = 1'-0"

1 RIB PROFILE - TYPE A/A1
1 1/2" = 1'-0"

DESIGN BY:										
DRAWN BY:		4	7/3/2023	ISSUED FOR BID						
CHECKED BY:										
APPROVED BY:		0	9/9/2022	ISSUED FOR PERMIT	Designe	Author	Checker			
CDOT/APPROVED BY:		NO.	DATE	REVISIONS	DES.	DRW.	CHK.	DCCO	CDOT	

TRANSYSTEMS
222 SOUTH RIVERSIDE PLAZA SUITE 610
CHICAGO, ILLINOIS 60606

SKIDMORE, OWINGS & MERRILL LLP
224 SOUTH MICHIGAN AVENUE, SUITE 1000
CHICAGO, ILLINOIS 60604

CHICAGO DEPARTMENT
OF TRANSPORTATION
DIVISION OF ENGINEERING

STATE / LAKE LOOP ELEVATED STATION
200 NORTH STATE STREET, CHICAGO, IL 60601

RIB PROFILE GEOMETRY - FEATURE STAIR

CDOT PROJECT D-1-209

DATE: 9/9/2022

SPEC. NO.

DRAWING NO.
A-421

REVISION NO.

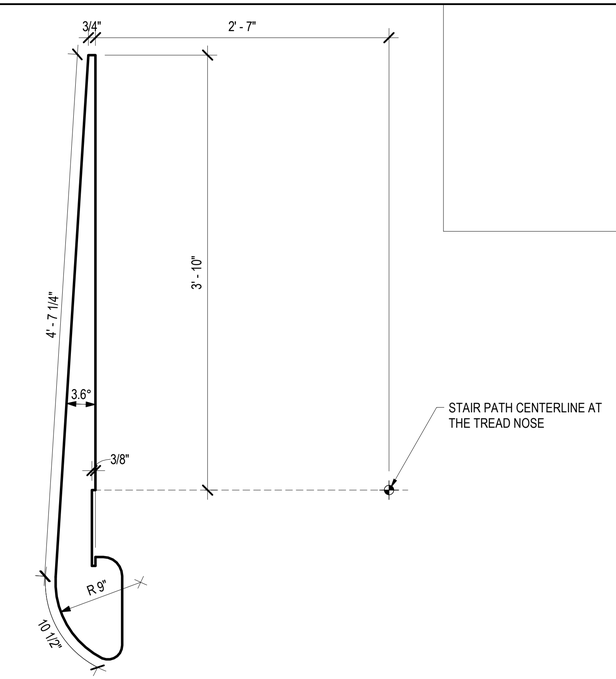

3 RIB PROFILE - TYPE F
1 1/2" = 1'-0"

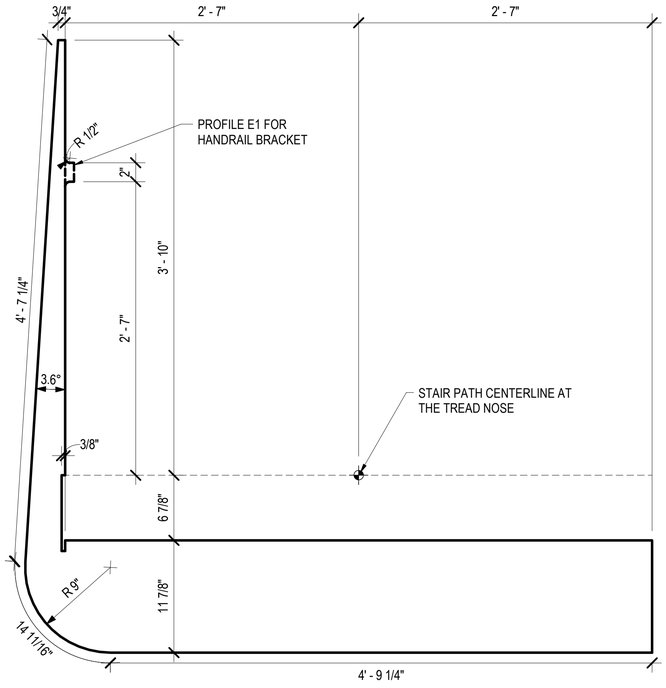

2 RIB PROFILE - TYPE E/E1
1 1/2" = 1'-0"

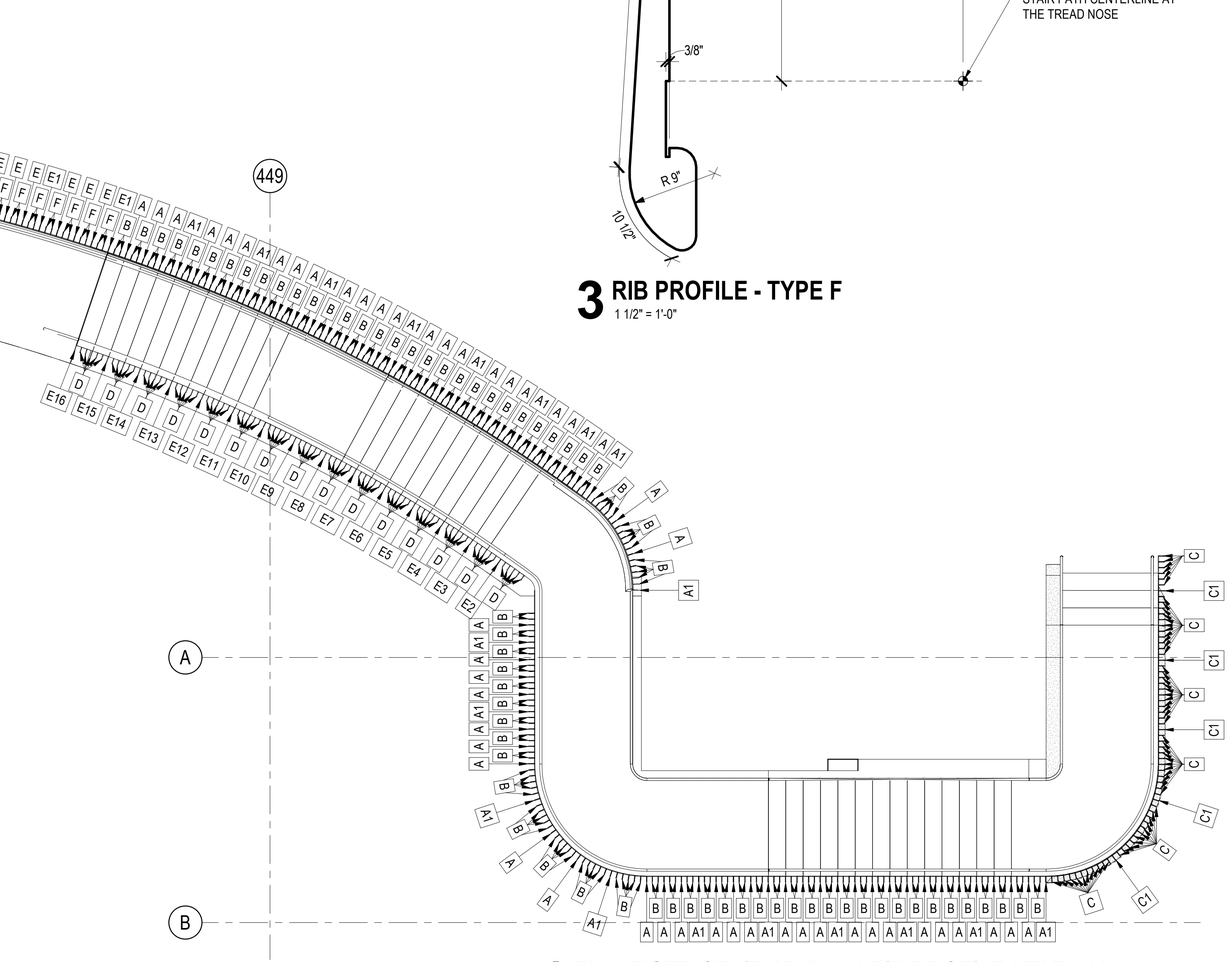

1 ENLARGED STAIR 2B PLAN RIB PROFILE KEYPLAN
1/4" = 1'-0"

DESIGN BY:											
DRAWN BY:		4	7/3/2023	ISSUED FOR BID							
CHECKED BY:											
APPROVED BY:		0	9/9/2022	ISSUED FOR PERMIT	Designe	Author	Checker				
CDOT/APPROVED BY:		NO.	DATE	REVISIONS	DES.	DRW.	CHK.	DCCO	CDOT		

TRANSYSTEMS
222 SOUTH RIVERSIDE PLAZA SUITE 610
CHICAGO, ILLINOIS 60606

SKIDMORE, OWINGS & MERRILL LLP
224 SOUTH MICHIGAN AVENUE, SUITE 1000
CHICAGO, ILLINOIS 60604

CHICAGO DEPARTMENT
OF TRANSPORTATION
DIVISION OF ENGINEERING

STATE / LAKE LOOP ELEVATED STATION
200 NORTH STATE STREET, CHICAGO, IL 60601

SPEC. NO.

RIB PROFILE GEOMETRY - FEATURE STAIR

DRAWING NO.
A-422

CDOT PROJECT D-1-209

DATE: 9/9/2022

REVISION NO.

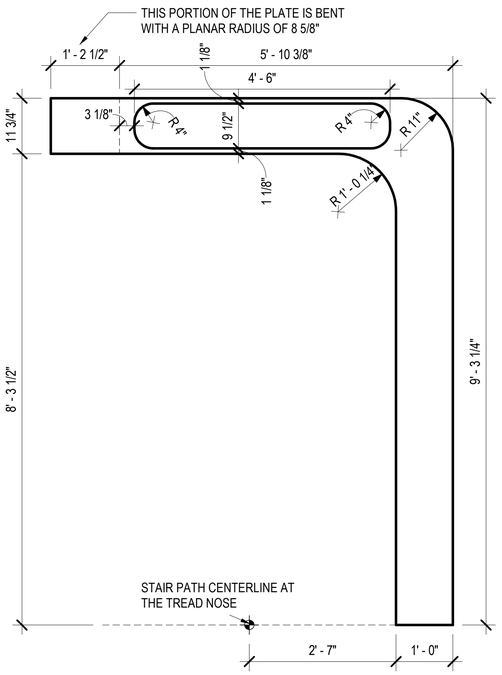

5 RIB PROFILE - TYPE H
3/4" = 1'-0"

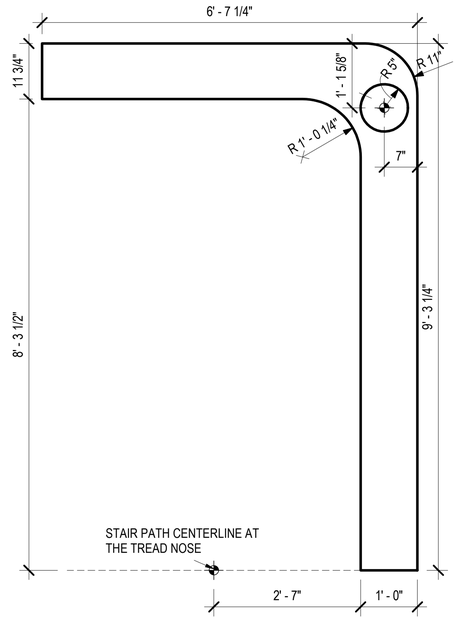

4 RIB PROFILE - TYPE G
3/4" = 1'-0"

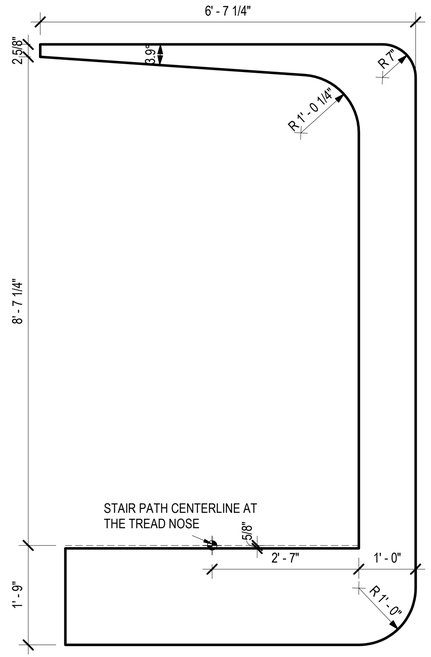

3 RIB PROFILE - TYPE F
3/4" = 1'-0"

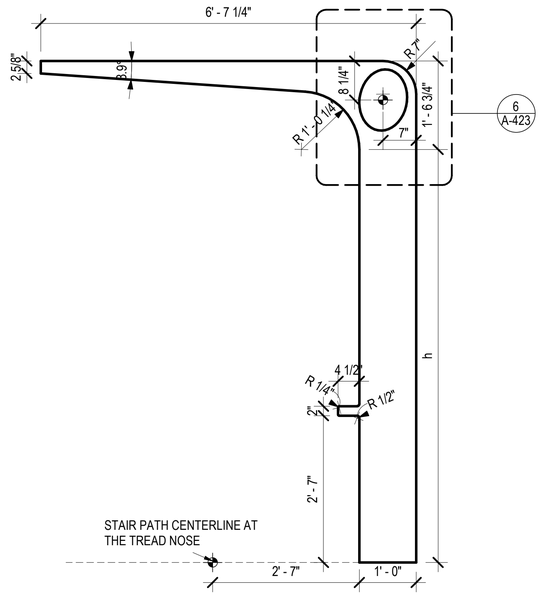

2 RIB PROFILE - TYPE E
3/4" = 1'-0"

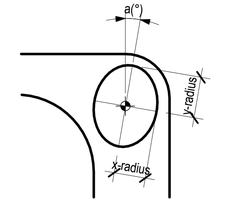

6 ECLIPSE OPENING
1" = 1'-0"

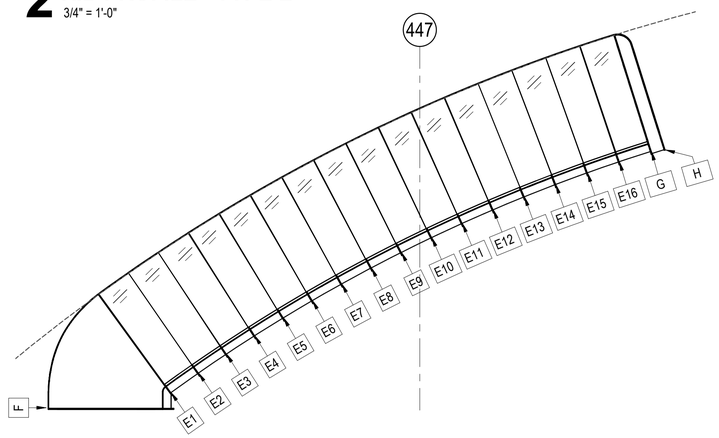

1 STAIR 1B CANOPY RIB PROFILE KEYPLAN
1/4" = 1'-0"

DESIGN BY:										
DRAWN BY:		4	7/3/2023	ISSUED FOR BID						
CHECKED BY:										
APPROVED BY:		0	9/9/2022	ISSUED FOR PERMIT	Designe	Author	Checker			
CDOT/APPROVED BY:		NO.	DATE	REVISIONS	DES.	DRW.	CHK.	DCCO	CDOT	

TRANSYSTEMS
222 SOUTH RIVERSIDE PLAZA SUITE 610
CHICAGO, ILLINOIS 60606

SKIDMORE, OWINGS & MERRILL LLP
224 SOUTH MICHIGAN AVENUE, SUITE 1000
CHICAGO, ILLINOIS 60604

CHICAGO DEPARTMENT
OF TRANSPORTATION
DIVISION OF ENGINEERING

STATE / LAKE LOOP ELEVATED STATION
200 NORTH STATE STREET, CHICAGO, IL 60601

SPEC. NO.

RIB PROFILE GEOMETRY - FEATURE STAIR

DRAWING NO.
A-423

CDOT PROJECT D-1-209

DATE: 9/9/2022

REVISION NO.

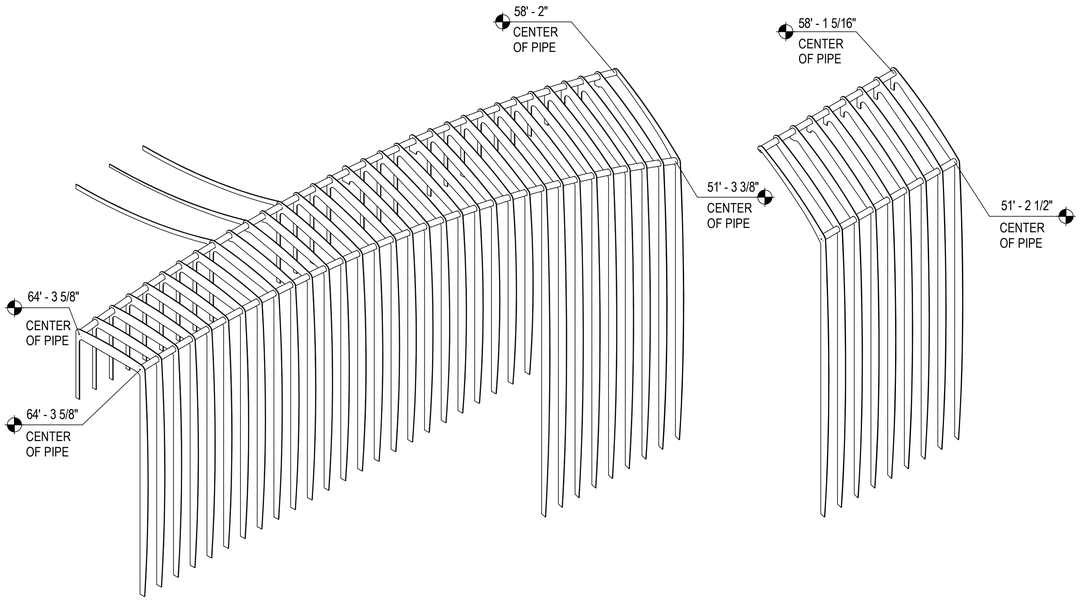

9 AXON - WEST ABUTMENT SOUTH

8 AXON - EAST ABUTMENT SOUTH

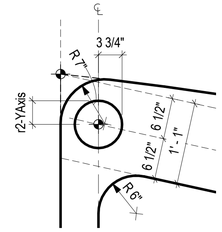

7 RIB CORNER PROFILE 2
1" = 1'-0"

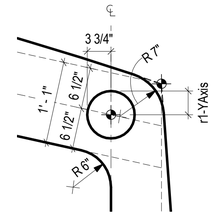

5 RIB CORNER PROFILE 1
1" = 1'-0"

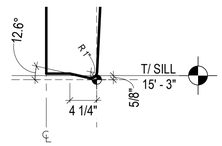

6 RIB CORNER PROFILE 3
1" = 1'-0"

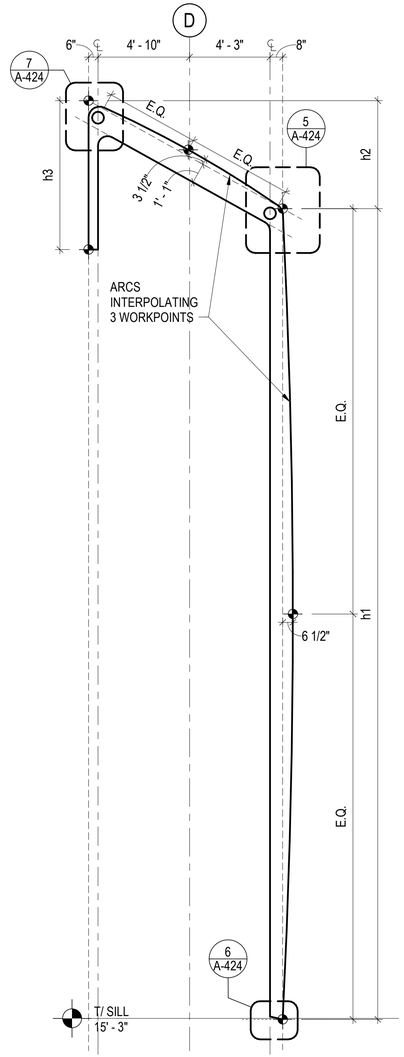

1 ELEVATION - RIB TYPE B
1/4" = 1'-0"

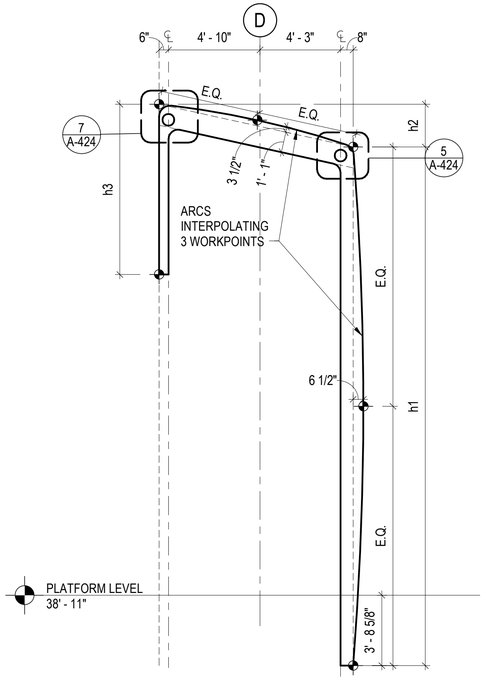

2 ELEVATION - RIB TYPE A
1/4" = 1'-0"

NOTE:
SOUTH ABUTMENT GEOMETRY IS SHOWN.
NORTH ABUTMENT IS MIRRORED GEOMETRY.

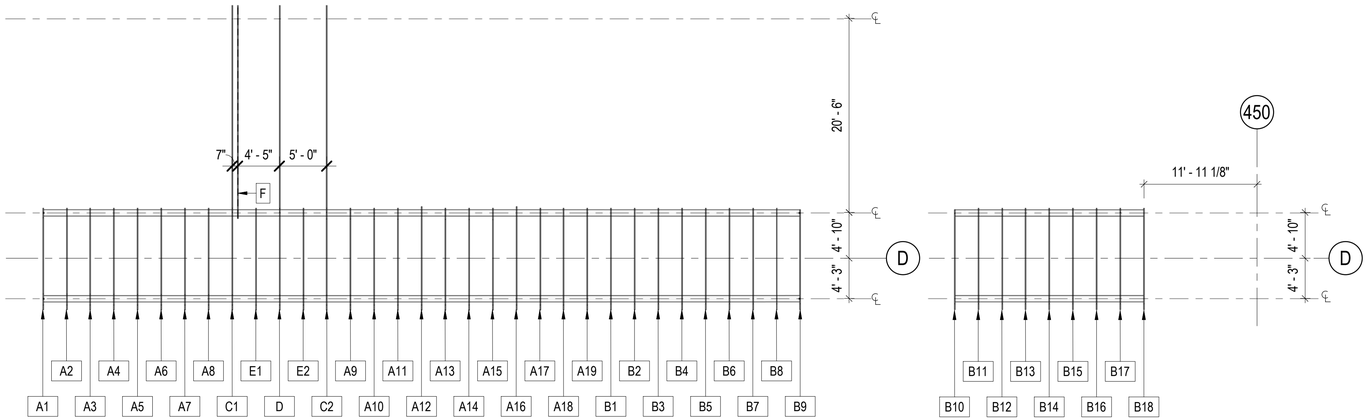

4 PLAN - WEST ABUTMENT SOUTH
1/8" = 1'-0"

3 PLAN - WEST ABUTMENT SOUTH
1/8" = 1'-0"

DESIGN BY:											
DRAWN BY:		4	7/3/2023	ISSUED FOR BID							
CHECKED BY:											
APPROVED BY:		0	9/9/2022	ISSUED FOR PERMIT	Designe	Author	Checker				
CDOT/APPROVED BY:		NO.	DATE	REVISIONS	DES.	DRW.	CHK.	DCCO	CDOT		

TRANSYSTEMS
222 SOUTH RIVERSIDE PLAZA SUITE 610
CHICAGO, ILLINOIS 60606

SKIDMORE, OWINGS & MERRILL LLP
224 SOUTH MICHIGAN AVENUE, SUITE 1000
CHICAGO, ILLINOIS 60604

CHICAGO DEPARTMENT
OF TRANSPORTATION
DIVISION OF ENGINEERING

STATE / LAKE LOOP ELEVATED STATION
200 NORTH STATE STREET, CHICAGO, IL 60601

RIB PROFILE GEOMETRY - ABUTMENTS & FLYOVER

CDOT PROJECT D-1-209

DATE: 9/9/2022

SPEC. NO.

DRAWING NO.
A-424

REVISION NO.

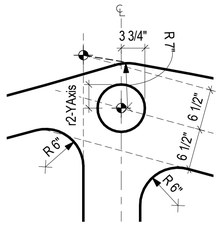

8 RIB CORNER PROFILE 4
1" = 1'-0"

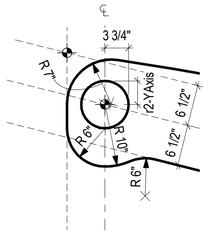

6 RIB CORNER PROFILE 6
1" = 1'-0"

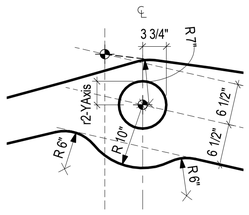

7 RIB CORNER PROFILE 5
1" = 1'-0"

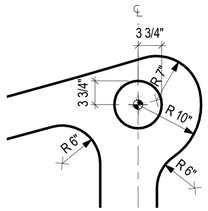

5 RIB CORNER PROFILE 7
1" = 1'-0"

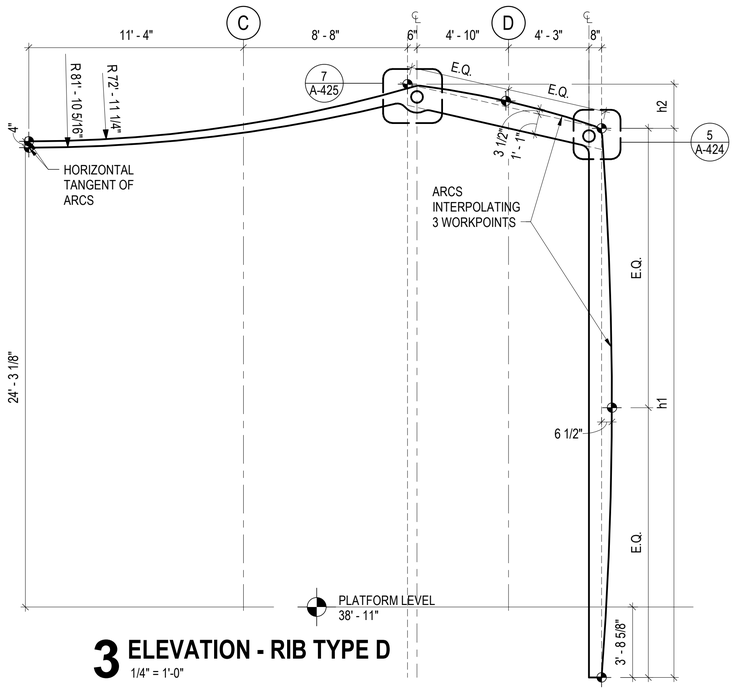

3 ELEVATION - RIB TYPE D
1/4" = 1'-0"

RIB PROFILES VARIABLES					
name	h1	h2	h3	r1-YAxis	r2-YAxis
A1	29' - 7 41/64"	0' - 11 31/32"	8' - 3 31/32"	0' - 3 3/4"	0' - 3 25/32"
A2	29' - 8 17/32"	0' - 2 25/32"	8' - 7 11/16"	0' - 3 3/4"	0' - 3 25/32"
A3	29' - 9 3/64"	0' - 5 19/32"	8' - 11 1/64"	0' - 3 3/4"	0' - 3 49/64"
A4	29' - 9 13/64"	0' - 8 13/32"	9' - 1 31/32"	0' - 3 3/4"	0' - 3 49/64"
A5	29' - 8 31/32"	0' - 11 13/64"	9' - 4 35/64"	0' - 3 3/4"	0' - 3 49/64"
A6	29' - 8 3/8"	1' - 2 1/64"	9' - 6 49/64"	0' - 3 3/4"	0' - 3 3/4"
A7	29' - 7 13/32"	1' - 4 13/16"	9' - 8 19/32"	0' - 3 3/4"	0' - 3 3/4"
A8	29' - 6 3/32"	1' - 7 39/64"	9' - 10 5/64"	0' - 3 3/4"	0' - 3 3/4"
C1	29' - 4 13/32"	1' - 10 13/32"	9' - 11 3/16"	0' - 3 3/4"	0' - 3 3/4"
E1	29' - 2 23/64"	2' - 1 13/64"	0' - 11 27/64"	0' - 3 49/64"	0' - 3 3/4"
D1	28' - 11 59/64"	2' - 4"	1' - 4 25/64"	0' - 3 49/64"	0' - 3 3/4"
E2	28' - 9 7/64"	2' - 6 13/16"	1' - 7/32"	0' - 3 49/64"	0' - 3 3/4"
C2	28' - 5 29/32"	2' - 9 5/8"	9' - 11 29/32"	0' - 3 49/64"	0' - 3 3/4"
A9	28' - 2 5/16"	3' - 7/16"	9' - 11 9/64"	0' - 3 25/32"	0' - 3 3/4"
A10	27' - 10 11/32"	3' - 3 17/64"	9' - 9 63/64"	0' - 3 25/32"	0' - 3 3/4"
A11	27' - 5 63/64"	3' - 6 7/64"	9' - 8 15/32"	0' - 3 51/64"	0' - 3 3/4"
A12	27' - 1 17/64"	3' - 8 31/32"	9' - 6 39/64"	0' - 3 51/64"	0' - 3 49/64"
A13	26' - 8 3/16"	3' - 11 53/64"	9' - 4 25/64"	0' - 3 13/16"	0' - 3 49/64"
A14	26' - 2 23/32"	4' - 2 11/16"	9' - 1 51/64"	0' - 3 13/16"	0' - 3 49/64"
A15	25' - 8 27/32"	4' - 5 37/64"	8' - 10 51/64"	0' - 3 53/64"	0' - 3 25/32"
A16	25' - 2 17/32"	4' - 8 1/2"	8' - 7 25/64"	0' - 3 53/64"	0' - 3 25/32"
A17	24' - 7 51/64"	4' - 11 27/64"	8' - 3 19/32"	0' - 3 27/32"	0' - 3 25/32"
A18	24' - 45/64"	5' - 2 3/8"	7' - 11 29/64"	0' - 3 55/64"	0' - 3 51/64"
A19	23' - 5 7/32"	5' - 5 11/32"	7' - 6 15/16"	0' - 3 7/8"	0' - 3 51/64"
B1	42' - 9 3/8"	5' - 8 21/64"	7' - 2 1/16"	0' - 3 7/8"	0' - 3 13/16"
B2	42' - 1 3/32"	5' - 11 23/64"	7' - 4 17/64"	0' - 3 57/64"	0' - 3 13/16"
B3	41' - 4 3/8"	6' - 2 25/64"	6' - 9 51/64"	0' - 3 29/32"	0' - 3 53/64"
B4	40' - 7 13/64"	6' - 5 15/32"	6' - 2 3/64"	0' - 3 59/64"	0' - 3 27/32"
B5	39' - 9 37/64"	6' - 8 37/64"	5' - 5 1/64"	0' - 3 15/16"	0' - 3 27/32"
B6	38' - 11 33/64"	6' - 11 23/32"	4' - 6 21/32"	0' - 3 61/64"	0' - 3 55/64"
B7	38' - 1 5/64"	7' - 2 29/32"	3' - 6 39/64"	0' - 3 31/32"	0' - 3 7/8"
B8	37' - 2 15/64"	7' - 6 7/64"	2' - 4 55/64"	0' - 1"	0' - 3 57/64"
B9	36' - 2 57/64"	7' - 9 3/8"	1' - 1 13/32"	0' - 4 1/64"	0' - 3 29/32"
B10	36' - 2 57/64"	7' - 9 3/8"	1' - 1 13/32"	0' - 3 3/4"	0' - 3 3/4"
B11	36' - 2 57/64"	7' - 9 3/8"	1' - 8 49/64"	0' - 3 3/4"	0' - 3 3/4"
B12	36' - 2 57/64"	7' - 9 3/8"	2' - 2 57/64"	0' - 3 3/4"	0' - 3 3/4"
B13	36' - 2 57/64"	7' - 9 3/8"	2' - 7 43/64"	0' - 3 3/4"	0' - 3 3/4"
B14	36' - 2 57/64"	7' - 9 3/8"	2' - 11 7/64"	0' - 3 3/4"	0' - 3 3/4"
B15	36' - 2 57/64"	7' - 9 3/8"	3' - 1 5/8"	0' - 3 3/4"	0' - 3 3/4"
B16	36' - 2 57/64"	7' - 9 3/8"	3' - 3 9/32"	0' - 3 3/4"	0' - 3 3/4"
B17	36' - 2 57/64"	7' - 9 3/8"	3' - 4 5/64"	0' - 3 3/4"	0' - 3 3/4"
B18	36' - 2 57/64"	7' - 9 3/8"	2' - 8 39/64"	0' - 3 3/4"	0' - 3 3/4"

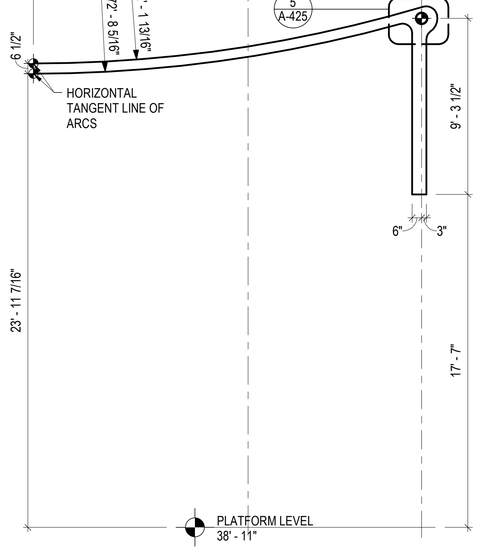

4 ELEVATION - RIB TYPE F
1/4" = 1'-0"

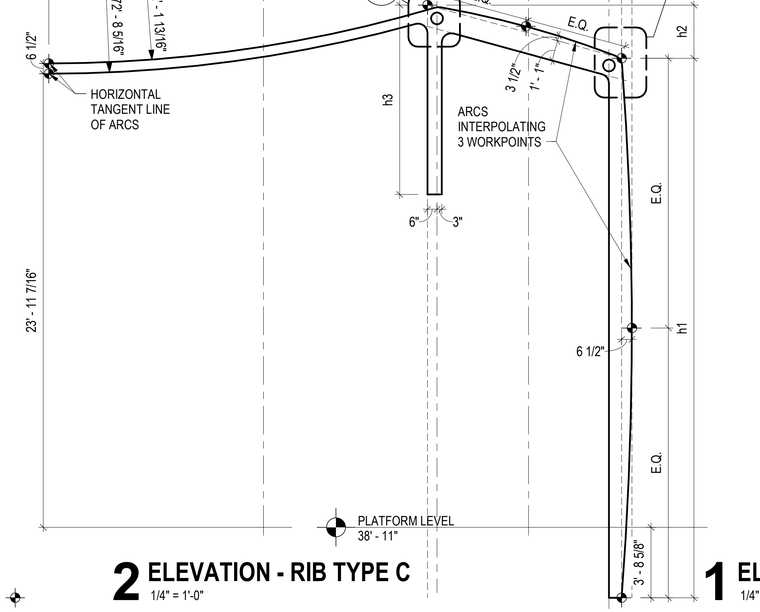

2 ELEVATION - RIB TYPE C
1/4" = 1'-0"

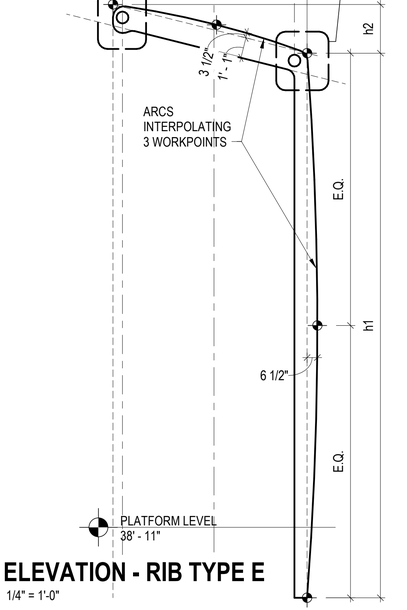

1 ELEVATION - RIB TYPE E
1/4" = 1'-0"

DESIGN BY:											
DRAWN BY:		4	7/3/2023	ISSUED FOR BID							
CHECKED BY:											
APPROVED BY:		0	9/9/2022	ISSUED FOR PERMIT	Designe	Author	Checker				
CDOT/APPROVED BY:		NO.	DATE	REVISIONS	DES.	DRW.	CHK.	DCCO	CDOT		

TRANSYSTEMS
222 SOUTH RIVERSIDE PLAZA SUITE 610
CHICAGO, ILLINOIS 60606

SKIDMORE, OWINGS & MERRILL LLP
224 SOUTH MICHIGAN AVENUE, SUITE 1000
CHICAGO, ILLINOIS 60604

CHICAGO DEPARTMENT OF TRANSPORTATION
DIVISION OF ENGINEERING

STATE / LAKE LOOP ELEVATED STATION
200 NORTH STATE STREET, CHICAGO, IL 60601

SPEC. NO.

RIB PROFILE GEOMETRY - ABUTMENTS & FLYOVER

DRAWING NO. A-425

CDOT PROJECT D-1-209 | DATE: 9/9/2022 | REVISION NO.

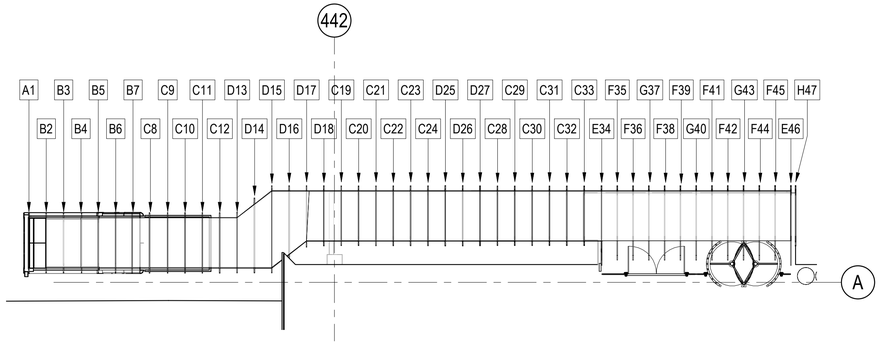

1 ENLARGED EXIT STAIR 1A PLAN - GEOMETRY

1/8" = 1'-0"

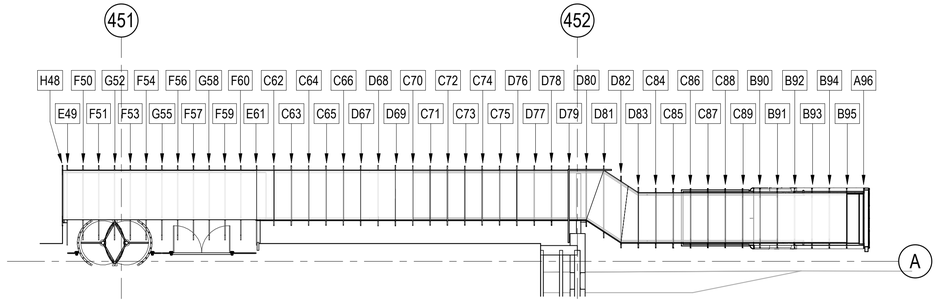

2 ENLARGED EXIT STAIR 2A PLAN - GEOMETRY

1/8" = 1'-0"

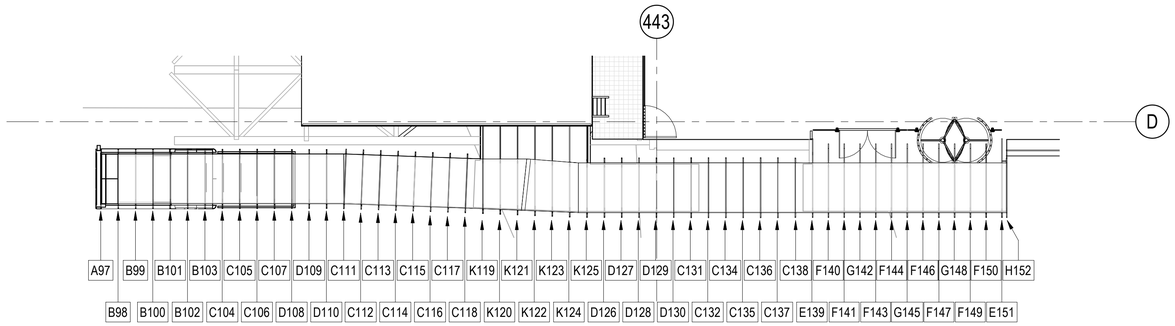

3 ENLARGED EXIT STAIR 3A PLAN - GEOMETRY

1/8" = 1'-0"

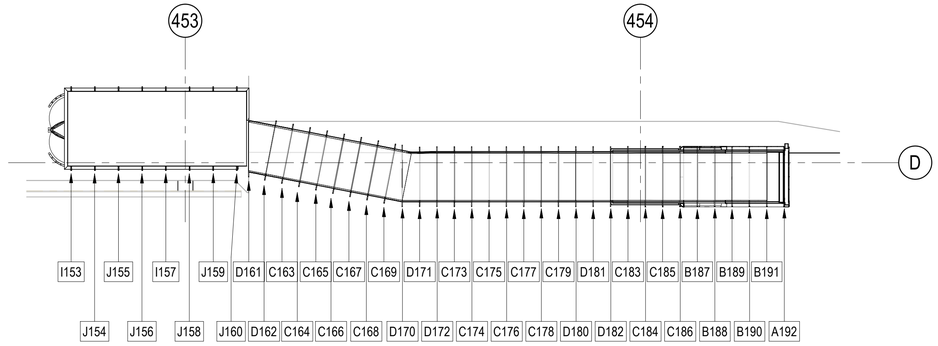

4 ENLARGED EXIT STAIR 4A PLAN - GEOMETRY

1/8" = 1'-0"

DESIGN BY:										
DRAWN BY:		4	7/3/2023	ISSUED FOR BID						
CHECKED BY:										
APPROVED BY:		0	9/9/2022	ISSUED FOR PERMIT	Designe	Author	Checker			
CDOT/APPROVED BY:		NO.	DATE	REVISIONS	DES.	DRW.	CHK.	DCCO	CDOT	

TRANSYSTEMS
222 SOUTH RIVERSIDE PLAZA SUITE 610
CHICAGO, ILLINOIS 60606

SKIDMORE, OWINGS & MERRILL LLP
224 SOUTH MICHIGAN AVENUE, SUITE 1000
CHICAGO, ILLINOIS 60604

CHICAGO DEPARTMENT OF TRANSPORTATION
DIVISION OF ENGINEERING

STATE / LAKE LOOP ELEVATED STATION
200 NORTH STATE STREET, CHICAGO, IL 60601

SPEC. NO.

RIB PROFILE GEOMETRY - EXIT STAIRS

DRAWING NO. A-426

CDOT PROJECT D-1-209

DATE: 9/9/2022

REVISION NO.

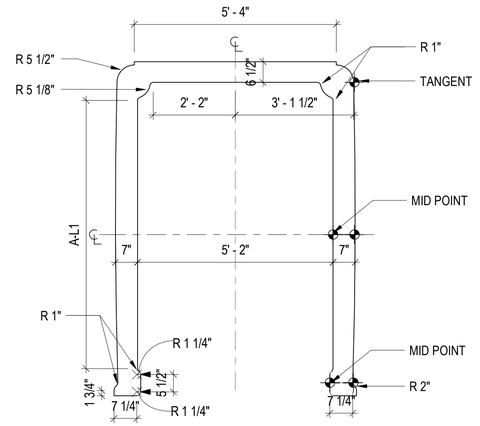

1 ELEVATION - RIB GEOMETRY TYPE A
1/2" = 1'-0"

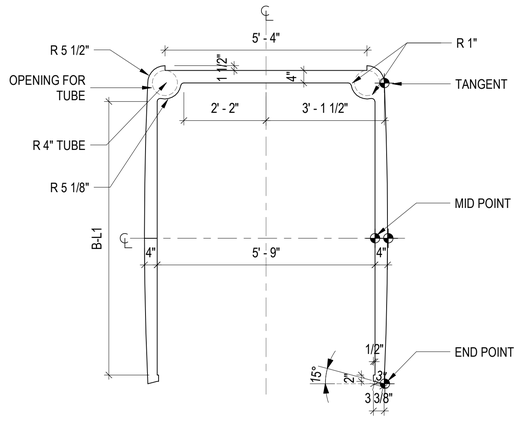

2 ELEVATION - RIB GEOMETRY TYPE B
1/2" = 1'-0"

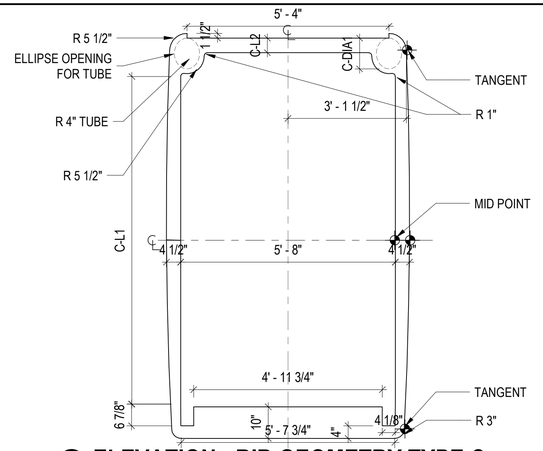

3 ELEVATION - RIB GEOMETRY TYPE C
1/2" = 1'-0"

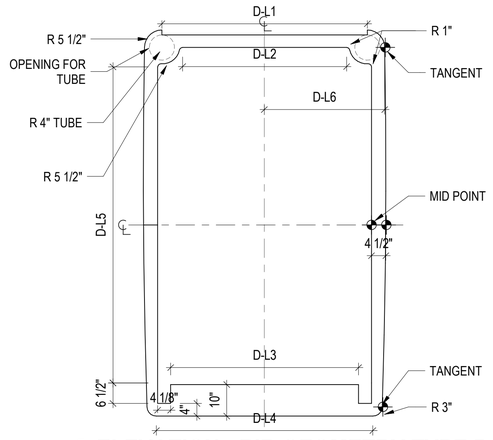

4 ELEVATION - RIB GEOMETRY TYPE D
1/2" = 1'-0"

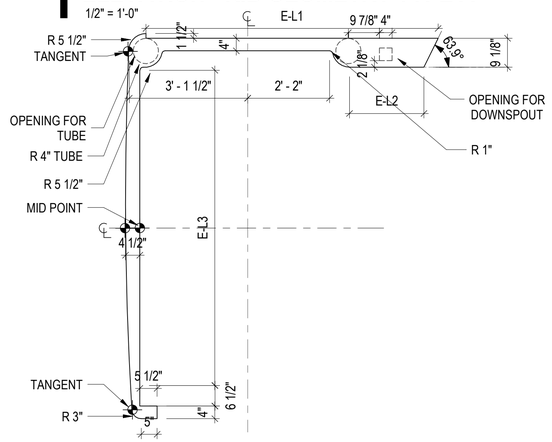

5 ELEVATION - RIB GEOMETRY TYPE E
1/2" = 1'-0"

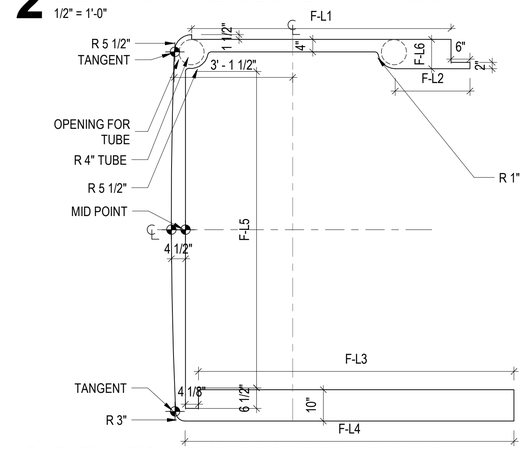

6 ELEVATION - RIB GEOMETRY TYPE F
1/2" = 1'-0"

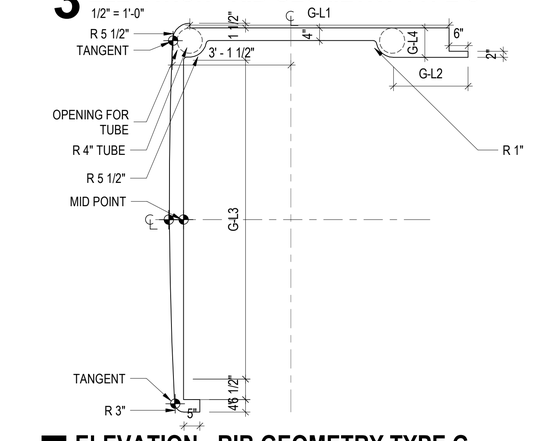

7 ELEVATION - RIB GEOMETRY TYPE G
1/2" = 1'-0"

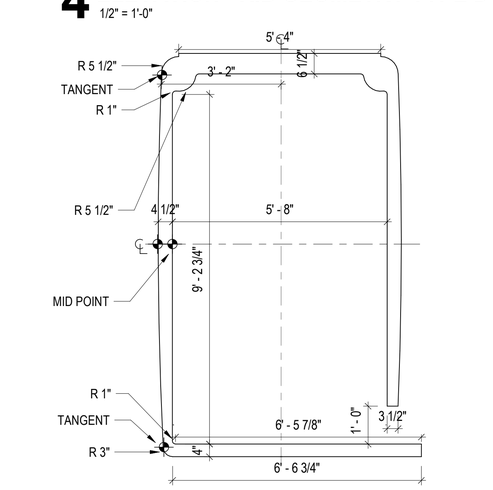

8 ELEVATION - RIB GEOMETRY TYPE H
1/2" = 1'-0"

NOTE:

1. TYPE-C ELLIPSE VERTICAL DIAMETER MEASURES FROM MIDDLE LINE OF RIBS.
2. SIDE ARCH GEOMETRY IS DEFINED BY THREE POINTS.
3.TYPE-E 34/61/139 NEEDS OPENING FOR DOWNSPOUT
4.VERTICAL DIMENSION VARIES BECAUSE 2% ROOF SLOPE.

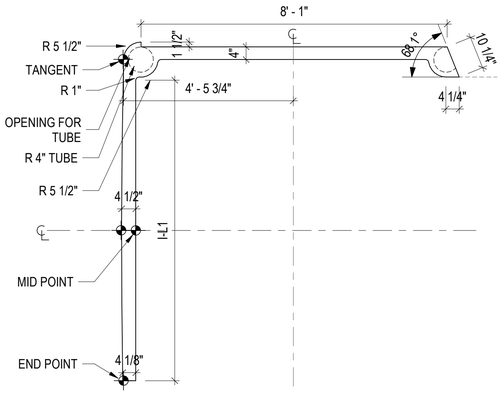

9 ELEVATION - RIB GEOMETRY TYPE I
1/2" = 1'-0"

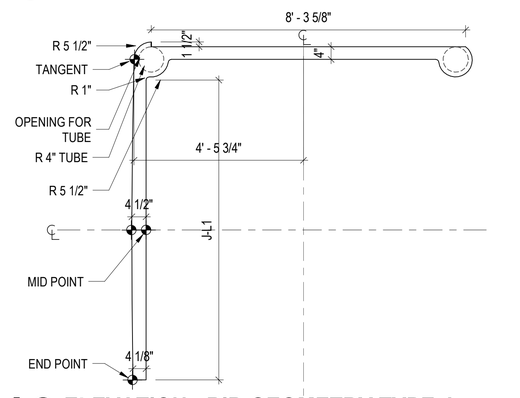

10 ELEVATION - RIB GEOMETRY TYPE J
1/2" = 1'-0"

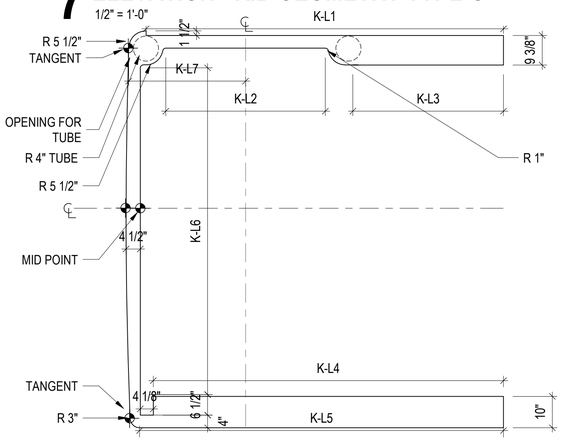

11 ELEVATION - RIB GEOMETRY TYPE K
1/2" = 1'-0"

DESIGN BY:										
DRAWN BY:		4	7/3/2023	ISSUED FOR BID						
CHECKED BY:										
APPROVED BY:		0	9/9/2022	ISSUED FOR PERMIT	Designe	Author	Checker			
CDOT/APPROVED BY:		NO.	DATE	REVISIONS	DES.	DRW.	CHK.	DCCO	CDOT	

TRANSYSTEMS
222 SOUTH RIVERSIDE PLAZA SUITE 610
CHICAGO, ILLINOIS 60606

SKIDMORE, OWINGS & MERRILL LLP
224 SOUTH MICHIGAN AVENUE, SUITE 1000
CHICAGO, ILLINOIS 60604

CHICAGO DEPARTMENT OF TRANSPORTATION
DIVISION OF ENGINEERING

STATE / LAKE LOOP ELEVATED STATION
200 NORTH STATE STREET, CHICAGO, IL 60601

SPEC. NO.

RIB PROFILE GEOMETRY - EXIT STAIRS

DRAWING NO. A-427

CDOT PROJECT D-1-209

DATE: 9/9/2022

REVISION NO.

PORTAL GEOMETRY-EXIT...	
Profile Number	HEIGHT
NORTH-WEST	8' - 2 1/2"
NORTH-EAST	8' - 2 1/2"
SOUTH-WEST	8' - 2 1/2"
SOUTH-EAST	8' - 2 1/2"

RIB GEOMETRY-TYPE A	
Profile Number	A_L1
A1	7' - 5 1/2"
A96	7' - 8 1/2"
A97	7' - 5 7/8"
A192	7' - 6 1/2"

RIB GEOMETRY-TYPE B	
Profile Number	B_L1
NORTH-WEST	
B2	7' - 7 1/8"
B3	7' - 7 1/2"
B4	7' - 7 7/8"
B5	8' - 1 1/4"
B6	8' - 2 3/4"
B7	8' - 11 1/4"
NORTH-EAST	
B90	7' - 10 3/4"
B91	7' - 1 5/8"
B92	7' - 9 7/8"
B93	7' - 9 1/2"
B94	7' - 9"
B95	7' - 8 5/8"
SOUTHWEST	
B98	7' - 8 1/2"
B99	7' - 8 7/8"
B100	7' - 9 3/8"
B101	8' - 1 1/4"
B102	8' - 1 1/4"
B103	8' - 9 3/8"
SOUTH-EAST	
B187	7' - 10 1/8"
B188	7' - 9 1/4"
B189	7' - 9 1/8"
B190	7' - 8 3/4"
B191	7' - 8 3/8"

RIB GEOMETRY-TYPE C			
Profile Number	C_L1	C_L2	C_DIA1
NORTH-WEST			
C8	8' - 7 3/4"	0' - 4 5/8"	0' - 10 3/8"
C9	8' - 8 1/4"	0' - 5 1/8"	0' - 10 3/8"
C10	8' - 8 3/4"	0' - 5 1/8"	0' - 10 3/8"
C11	8' - 9 1/8"	0' - 5 1/8"	0' - 10 3/8"
C12	8' - 9 5/8"	0' - 5 1/8"	0' - 10 1/8"
C13	7' - 9 5/8"	0' - 4 1/2"	0' - 9 7/8"
C19	7' - 10"	0' - 4 1/2"	0' - 10 1/4"
C20	7' - 10 1/2"	0' - 4 1/2"	0' - 10 1/4"
C21	7' - 11"	0' - 4 1/2"	0' - 10 1/4"
C22	7' - 11 3/8"	0' - 4 1/2"	0' - 10 1/4"
C23	7' - 11 7/8"	0' - 4 1/2"	0' - 10 1/8"
C24	7' - 7 3/4"	0' - 4 3/8"	0' - 9 3/4"
C29	7' - 7 7/8"	0' - 4 3/8"	0' - 10"
C30	7' - 8 1/8"	0' - 4 3/8"	0' - 10"
C31	7' - 8 3/8"	0' - 4 3/8"	0' - 10"
C32	7' - 8 5/8"	0' - 4 3/8"	0' - 10"
C33	7' - 8 3/4"	0' - 4 3/8"	0' - 10 1/8"
NORTH-EAST			
C62	8' - 8 1/2"	0' - 4 1/2"	0' - 10 3/8"
C63	8' - 6 3/4"	0' - 4 1/2"	0' - 10 1/2"
C64	8' - 5"	0' - 4 1/2"	0' - 10 1/2"
C65	8' - 3 3/8"	0' - 4 1/2"	0' - 10 1/2"
C66	8' - 1 5/8"	0' - 4 1/2"	0' - 10 3/8"
C70	8' - 6 1/2"	0' - 5"	0' - 10 1/4"
C71	8' - 5 3/8"	0' - 5"	0' - 10 1/2"
C72	8' - 3 3/4"	0' - 5"	0' - 10 1/2"
C73	8' - 2 3/8"	0' - 5"	0' - 10 1/2"
C74	8' - 0 3/4"	0' - 5"	0' - 10 1/2"
C75	7' - 11 3/8"	0' - 5"	0' - 10"
C84	8' - 5 1/4"	0' - 4 1/2"	0' - 10 1/4"
C85	8' - 4 1/2"	0' - 4 1/2"	0' - 10 1/4"
C86	8' - 3 3/4"	0' - 4 1/2"	0' - 10 1/4"
C87	8' - 3 1/8"	0' - 4 1/2"	0' - 10 1/4"
C88	8' - 2 3/8"	0' - 4 1/2"	0' - 10 1/4"
C89	8' - 1 5/8"	0' - 4 1/2"	0' - 10 1/4"
SOUTH-WEST			
C104	8' - 8 3/4"	0' - 2 7/8"	0' - 9 3/8"
C105	8' - 9 1/8"	0' - 4 7/8"	0' - 10 1/8"
C106	8' - 10"	0' - 4 3/4"	0' - 10 1/8"
C107	8' - 9 5/8"	0' - 4 5/8"	0' - 10 1/8"
C111	9' - 0 1/2"	0' - 4 3/4"	0' - 9 3/4"
C112	8' - 11"	0' - 4 3/4"	0' - 9 3/4"
C113	8' - 9 5/8"	0' - 5"	0' - 9 3/4"
C114	8' - 8 3/8"	0' - 4 7/8"	0' - 9 3/4"
C115	8' - 7 1/8"	0' - 3 7/8"	0' - 9 3/4"
C116	8' - 5 3/4"	0' - 5"	0' - 9 3/4"
C117	8' - 4 5/8"	0' - 4 7/8"	0' - 9 3/4"
C118	8' - 3 1/4"	0' - 5 3/8"	0' - 10"
C131	9' - 2 1/4"	0' - 4 1/8"	0' - 9 3/4"
C132	9' - 2 1/4"	0' - 4 7/8"	0' - 10 1/4"
C133	9' - 2 1/4"	0' - 4 7/8"	0' - 10 1/4"
C134	9' - 2 3/8"	0' - 5 3/8"	0' - 10 1/4"
C135	9' - 2 3/8"	0' - 4 7/8"	0' - 10 1/4"
C136	9' - 2 3/8"	0' - 4 5/8"	0' - 10"
C137	8' - 9"	0' - 3 7/8"	0' - 8"
C138	8' - 5 1/4"	0' - 4 1/2"	0' - 10 1/8"
SOUTH-EAST			
C163	8' - 5 1/4"	0' - 4 3/4"	0' - 10 1/8"
C164	8' - 5 3/8"	0' - 4 5/8"	0' - 10 1/8"
C165	8' - 5 1/2"	0' - 4 3/4"	0' - 10 1/8"
C166	8' - 5 1/2"	0' - 4 3/4"	0' - 10 1/8"
C167	8' - 6 1/8"	0' - 4 3/4"	0' - 10 1/8"
C168	8' - 6 1/8"	0' - 4 3/4"	0' - 10 3/8"
C169	8' - 4 5/8"	0' - 4 3/4"	0' - 10"
C173	8' - 4 3/4"	0' - 4 3/4"	0' - 10"
C174	8' - 5 1/2"	0' - 4"	0' - 10"
C175	8' - 5 1/8"	0' - 4 3/4"	0' - 10"
C176	8' - 5 3/8"	0' - 4 3/4"	0' - 10"
C177	8' - 5 1/2"	0' - 4 3/4"	0' - 10"
C178	8' - 5 5/8"	0' - 4 3/4"	0' - 10 1/4"
C179	8' - 10 1/4"	0' - 5"	0' - 10 3/8"
C183	8' - 9 1/2"	0' - 4 7/8"	0' - 10 3/8"
C184	8' - 8 5/8"	0' - 4 7/8"	0' - 10 3/8"
C185	8' - 7 3/4"	0' - 4 7/8"	0' - 10 3/8"

RIB GEOMETRY-TYPE D						
Profile Number	D_L1	D_L2	D-L3	D-L4	D-L5	D-L6
NORTH-WEST						
D13	5' - 4 5/8"	4' - 3 3/4"	4' - 9 5/8"	5' - 8 3/4"	8' - 4 1/8"	3' - 1 3/4"
D14	6' - 9 1/8"	5' - 7 3/4"	6' - 2 7/8"	7' - 1 3/4"	8' - 4"	3' - 11 1/4"
D15	8' - 2 1/8"	6' - 11 1/4"	7' - 8 1/8"	8' - 6 3/4"	8' - 4 3/8"	4' - 6 3/8"
D16	6' - 9 1/8"	5' - 7 5/8"	6' - 2 7/8"	7' - 1 3/4"	8' - 4 3/4"	3' - 10 3/8"
D17	5' - 4 1/8"	4' - 4"	4' - 9 5/8"	5' - 8 5/8"	8' - 5"	3' - 1 5/8"
D18	5' - 4"	4' - 4"	4' - 9 5/8"	5' - 8 1/4"	8' - 5 3/8"	3' - 1 3/8"
D25	5' - 4"	4' - 3 3/4"	4' - 9 5/8"	5' - 8 1/4"	8' - 7"	3' - 1 1/2"
D26	5' - 4"	4' - 3 3/4"	4' - 9 5/8"	5' - 8 1/4"	8' - 7 1/2"	3' - 1 1/2"
D27	5' - 4"	4' - 4 3/8"	4' - 9 5/8"	5' - 8 1/8"	8' - 2 5/8"	3' - 1 1/2"
NORTH-EASTT						
D67	5' - 4"	4' - 4 1/8"	4' - 9 3/8"	5' - 7 7/8"	8' - 9"	3' - 1 1/2"
D68	5' - 4"	4' - 3 5/8"	4' - 9 5/8"	5' - 8 1/4"	9' - 2 3/4"	3' - 1 1/2"
D69	5' - 4"	4' - 3 5/8"	4' - 9 5/8"	5' - 8 1/4"	9' - 2 1/2"	3' - 1 1/2"
D76	5' - 4"	4' - 4 1/4"	4' - 9 3/8"	5' - 7 7/8"	8' - 9 1/8"	3' - 1 1/4"
D77	5' - 4"	4' - 4 1/4"	4' - 9 3/8"	5' - 7 7/8"	8' - 8 7/8"	3' - 1 1/4"
D78	5' - 3 7/8"	4' - 4 1/4"	4' - 9 3/8"	5' - 7 3/4"	8' - 8 1/2"	3' - 1 1/4"
D79	5' - 3 7/8"	4' - 4 1/4"	4' - 9 3/8"	5' - 7 3/4"	8' - 8 1/8"	3' - 1 1/4"
D80	5' - 4 1/8"	4' - 4 3/8"	4' - 9 7/8"	5' - 8 5/8"	8' - 7 3/4"	3' - 2"
D81	6' - 6 3/8"	5' - 4 3/4"	6' - 0 1/4"	6' - 10 7/8"	8' - 7 3/8"	3' - 9 1/8"
D82	6' - 6 1/8"	5' - 4 3/4"	6' - 0"	6' - 10 3/4"	8' - 7 1/8"	3' - 8 1/2"
D83	5' - 4"	4' - 4 3/8"	4' - 9 3/4"	5' - 8 3/8"	8' - 6 3/4"	3' - 1 3/8"
SOUTH-WEST						
D108	5' - 3"	4' - 3 1/4"	4' - 8 5/8"	5' - 7 1/8"	8' - 3 5/8"	3' - 1 1/2"
D109	5' - 3"	4' - 3 1/8"	4' - 8 5/8"	5' - 7"	8' - 3 5/8"	3' - 1 1/2"
D110	5' - 3"	4' - 3 1/2"	4' - 8 5/8"	5' - 7"	8' - 4 1/8"	3' - 1 1/2"
D126	5' - 3"	4' - 3"	4' - 8 5/8"	5' - 7 1/8"	8' - 9"	3' - 1 1/2"
D127	5' - 3"	4' - 3"	4' - 8 5/8"	5' - 7 1/8"	8' - 9 1/4"	3' - 1 1/2"
D128	5' - 3"	4' - 2 7/8"	4' - 8 5/8"	5' - 7 1/8"	8' - 9 5/8"	3' - 1 1/2"
D129	5' - 3"	4' - 2 7/8"	4' - 8 5/8"	5' - 7 1/8"	8' - 10"	3' - 1 1/2"
D130	5' - 3"	4' - 2 7/8"	4' - 8 5/8"	5' - 7 1/4"	8' - 10 1/4"	3' - 1 1/2"
SOUTH-EAST						
D161	5' - 4"	4' - 3 3/4"	4' - 9 5/8"	5' - 8 1/4"	8' - 5 7/8"	3' - 1 1/2"
D162	5' - 4"	4' - 3 3/4"	4' - 9 5/8"	5' - 8 1/4"	8' - 5 7/8"	3' - 1 1/2"
D170	5' - 5 1/8"	4' - 4 5/8"	4' - 10 7/8"	5' - 9 1/2"	8' - 6 1/8"	3' - 2 1/4"
D171	5' - 3 1/8"	4' - 2 3/4"	4' - 8 3/4"	5' - 7 3/8"	8' - 5 5/8"	3' - 1"
D172	5' - 3 1/2"	4' - 3 1/4"	4' - 9 1/8"	5' - 7 5/8"	8' - 5 1/4"	3' - 1 1/4"
D180	5' - 3 1/2"	4' - 3 1/4"	4' - 9 1/4"	5' - 8"	8' - 6 1/8"	3' - 1 1/4"
D181	5' - 3 1/2"	4' - 3 1/4"	4' - 9 1/4"	5' - 7 7/8"	8' - 5 3/4"	3' - 1 1/4"
D182	5' - 3 1/2"	4' - 3 1/4"	4' - 9 1/4"	5' - 7 7/8"	8' - 5 3/8"	3' - 1 1/4"

RIB GEOMETRY-TYPE E			
Profile Number	E_L1	E_L2	E_L3
NORTH-WEST			
E34	7' - 8 1/4"	1' - 11 5/8"	8' - 3 7/8"
E46	7' - 10 1/2"	2' - 2"	8' - 7 7/8"
NORTH-EAST			
E49	5' - 3 7/8"	2' - 3"	9' - 2"
E61	5' - 3 7/8"	2' - 0 5/8"	8' - 9 3/4"
SOUTH-WEST			
E139	7' - 8 5/8"	2' - 1 3/8"	8' - 7 5/8"
E151	7' - 10 7/8"	2' - 1 3/8"	8' - 11 5/8"

RIB GEOMETRY-TYPE F						
Profile Number	F_L1	F_L2	F-L3	F-L4	F-L5	F-L6
NORTH-WEST						
F35	6' - 10 1/8"	2' - 0 1/4"	8' - 3"	8' - 8 1/4"	8' - 4 1/4"	0' - 9 1/8"
F36	6' - 10 1/8"	2' - 0 1/4"	8' - 3"	8' - 8 1/4"	8' - 4 1/2"	0' - 9 1/8"
F38	6' - 10 1/8"	2' - 0 1/4"	8' - 3"	8' - 8 1/4"	8' - 5 1/4"	0' - 9 1/4"
F39	6' - 10 1/8"	2' - 0 1/4"	8' - 3"	8' - 8 1/4"	8' - 5 5/8"	0' - 9 1/4"
F41	6' - 10 1/8"	2' - 0 1/4"	8' - 3"	8' - 8 1/4"	8' - 6 1/4"	0' - 9 3/8"
F42	6' - 10 1/8"	2' - 0 1/4"	8' - 3"	8' - 8 1/4"	8' - 6 5/8"	0' - 9 3/8"
F44	6' - 10 1/8"	2' - 0 1/4"	8' - 3"	8' - 8 1/4"	8' - 7 1/4"	0' - 9 3/8"
F45	6' - 10 1/8"	2' - 0 1/4"	8' - 3"	8' - 8 1/4"	8' - 7 5/8"	0' - 9 1/2"
NORTH-EAST						
F50	6' - 10 1/8"	2' - 0 1/4"	8' - 1 7/8"	8' - 7 1/8"	9' - 1 5/8"	0' - 9 1/2"
F51	6' - 10 1/8"	2' - 0 1/4"	8' - 1 7/8"	8' - 7 1/4"	9' - 1 1/4"	0' - 9 1/2"
F53	6' - 10 1/8"	2' - 0 1/4"	8' - 1 7/8"	8' - 7 1/4"	9' - 0 1/2"	0' - 9 1/2"
F54	6' - 10 1/8"	2' - 0 1/4"	8' - 1 7/8"	8' - 7 1/4"	9' - 0 1/4"	0' - 9 1/2"
F56	6' - 10 1/8"	2' - 0 1/4"	8' - 1 7/8"	8' - 7 1/8"	8' - 11 1/2"	0' - 9 1/2"
F57	6' - 10 1/8"	2' - 0 1/4"	8' - 1 7/8"	8' - 7 1/8"	8' - 11 1/8"	0' - 9 1/2"
F59	6' - 10 1/8"	2' - 0 1/4"	8' - 1 7/8"	8' - 7 1/8"	8' - 10 3/8"	0' - 9 1/2"
F60	6' - 10 1/8"	2' - 0 1/4"	8' - 1 7/8"	8' - 7 1/8"	8' - 10 1/8"	0' - 9 1/2"
SOUTH-WEST						
F140	6' - 9 1/8"	2' - 0 1/4"	9' - 3 7/8"	9' - 9 1/4"	8' - 8"	0' - 9 1/8"
F141	6' - 9 1/8"	2' - 0 1/4"	9' - 3 7/8"	9' - 9 1/4"	8' - 8 3/8"	0' - 9 1/4"
F143	6' - 9 1/8"	2' - 0 1/4"	9' - 3 7/8"	9' - 9 1/4"	8' - 9"	0' - 9 1/4"
F144	6' - 9 1/8"	2' - 0 1/4"	9' - 3 7/8"	9' - 9 1/4"	8' - 9 3/8"	0' - 9 1/4"
F146	6' - 9 1/8"	2' - 0 1/4"	9' - 3 7/8"	9' - 9 1/4"	8' - 10 1/8"	0' - 9 3/8"
F147	6' - 9 1/8"	2' - 0 1/4"	9' - 3 7/8"	9' - 9 1/4"	8' - 10 3/8"	0' - 9 3/8"
F149	6' - 9 1/8"	2' - 0 1/4"	9' - 3 7/8"	9' - 9 1/4"	8' - 11"	0' - 9 1/2"
F150	6' - 9 1/8"	2' - 0 1/4"	9' - 3 7/8"	9' - 9 1/4"	8' - 11 1/4"	0' - 9 1/2"

RIB GEOMETRY-TYPE G				
Profile Number	G_L1	G_L2	G_L3	G_L4
NORTH-WEST				
G37	6' - 10 1/8"	2' - 0 1/4"	8' - 5"	0' - 9 1/4"
G40	6' - 10 1/8"	2' - 0 1/4"	8' - 6"	0' - 9 1/4"
G43	6' - 10 1/8"	2' - 0 1/4"	8' - 7"	0' - 9 3/8"
NORTH-EASTT				
G52	6' - 10 1/8"	2' - 0 1/4"	9' - 1"	0' - 9 1/2"
G55	6' - 10 1/8"	2' - 0 1/4"	9' - 0"	0' - 9 1/2"
G58	6' - 10 1/8"	2' - 0 1/4"	8' - 10 7/8"	0' - 9 1/2"
SOUTH-WEST				
G142	6' - 9 1/8"	2' - 0 1/4"	8' - 8 7/8"	0' - 9 1/4"
G145	6' - 9 1/8"	2' - 0 1/4"	8' - 9 7/8"	0' - 9 3/8"
G148	6' - 9 1/8"	2' - 0 1/4"	8' - 10 7/8"	0' - 9 3/8"

RIB GEOMETRY-TYPE I	
Profile Number	I_L1
SOUTH-EAST VESTIBULE	
I153	7' - 11 1/4"
I157	7' - 9 3/4"

RIB GEOMETRY-TYPE J	
Profile Number	J_L1
SOUTH-EAST VESTIBULE	
J154	7' - 11"
J155	7' - 11"
J156	7' - 10 1/4"
J158	0' - 10 1/2"
J159	7' - 9 3/8"
J160	7' - 9 1/8"

RIB GEOMETRY-TYPE K						
Profile Number	K_L1	K_L2	K-L3	K-L4	K-L5	K-L6	K-L7
SOUTH-WEST COMM ROOM							
K119	9' - 0 3/8"	3' - 11 1/4"	3' - 1 1/8"	8' - 9 3/8"	9' - 2 5/8"	8' - 5 3/8"	3' - 1 1/8"
K120	9' - 1 1/4"	3' - 11 1/8"	3' - 1 1/2"	8' - 10 1/4"	9' - 3 1/2"	8' - 5 3/4"	3' - 1 1/2"
K121	9' - 2 1/8"	3' - 11 1/4"	3' - 2"	8' - 9 7/8"	9' - 3 1/4"	8' - 6"	3' - 2"
K122	9' - 3"	4' - 0"	3' - 2"	8' - 11 7/8"	9' - 5 1/4"	8' - 6 3/8"	3' - 2"
K123	9' - 3 7/8"	4' - 1 3/4"	3' - 1 5/8"	9' - 0 3/4"	9' - 6"	8' - 6 3/4"	3' - 1 5/8"
K124	9' - 4 7/8"	4' - 0 5/8"	3' - 1 1/4"	9' - 1 5/8"	9' - 6 7/8"	8' - 7 1/8"	3' - 1 1/4"
K125	9' - 5 1/4"	4' - 5 7/8"	3' - 1 1/8"	9' - 2"	9' - 7 3/8"	8' - 7 1/2"	3' - 1 1/8"

| | | | | | | |

NOTE:

1. TYPE-C ELLIPSE VERTICAL DIAMETER MEASURES FROM MIDDLE LINE OF RIBS.
2. SIDE ARCH GEOMETRY IS DEFINED BY THREE POINTS.
3. SOUTH ESCALATOR RIB GEOMETRY IS SHOWN. NORTH ESCALATOR RIB GEOMETRY IS MIRRORED.

RIB GEOMETRY-TYPE M

Profile Number	M_L1	M_L2	M_DIA1
M2	7' - 5 3/4"	0' - 4"	0' - 8"
M3	7' - 6"	0' - 4"	0' - 8"
M4	7' - 6 3/8"	0' - 4"	0' - 8"
M5	7' - 6 5/8"	0' - 4"	0' - 8"
M6	7' - 7"	0' - 4"	0' - 8"
M7	7' - 7 1/2"	0' - 4"	0' - 8"
M8	7' - 7 1/2"	0' - 3 3/4"	0' - 8 1/8"
M9	7' - 10 3/4"	0' - 4 1/2"	0' - 8 5/8"
M10	8' - 6 3/4"	0' - 4 1/2"	0' - 9 7/8"
M11	9' - 6 3/4"	0' - 4 1/2"	0' - 9 7/8"
M12	9' - 10 3/4"	0' - 4 1/2"	0' - 9 7/8"
M13	9' - 11"	0' - 4 1/2"	0' - 9 7/8"
M14	10' - 10 3/8"	0' - 4 1/2"	0' - 9 7/8"

RIB GEOMETRY-TYPE N

Profile Number	N_L1	N_L2	N_DIA1
N15	11' - 2 1/4"	0' - 4 1/2"	0' - 9 7/8"
N16	11' - 2 5/8"	0' - 4 1/2"	0' - 9 7/8"
N17	11' - 2 5/8"	0' - 4 1/2"	0' - 9 7/8"
N18	11' - 3 1/4"	0' - 4 1/2"	0' - 9 7/8"
N19	11' - 3 1/4"	0' - 4 1/2"	0' - 9 7/8"
N20	11' - 3 1/4"	0' - 4 1/2"	0' - 9 7/8"
N21	11' - 3 3/4"	0' - 4 1/2"	0' - 9 7/8"

RIB GEOMETRY-TYPE O

Profile Number	O_L1
O22	11' - 5 1/8"
O23	10' - 5 5/8"
O24	9' - 11"
O25	9' - 11"
O26	9' - 11"

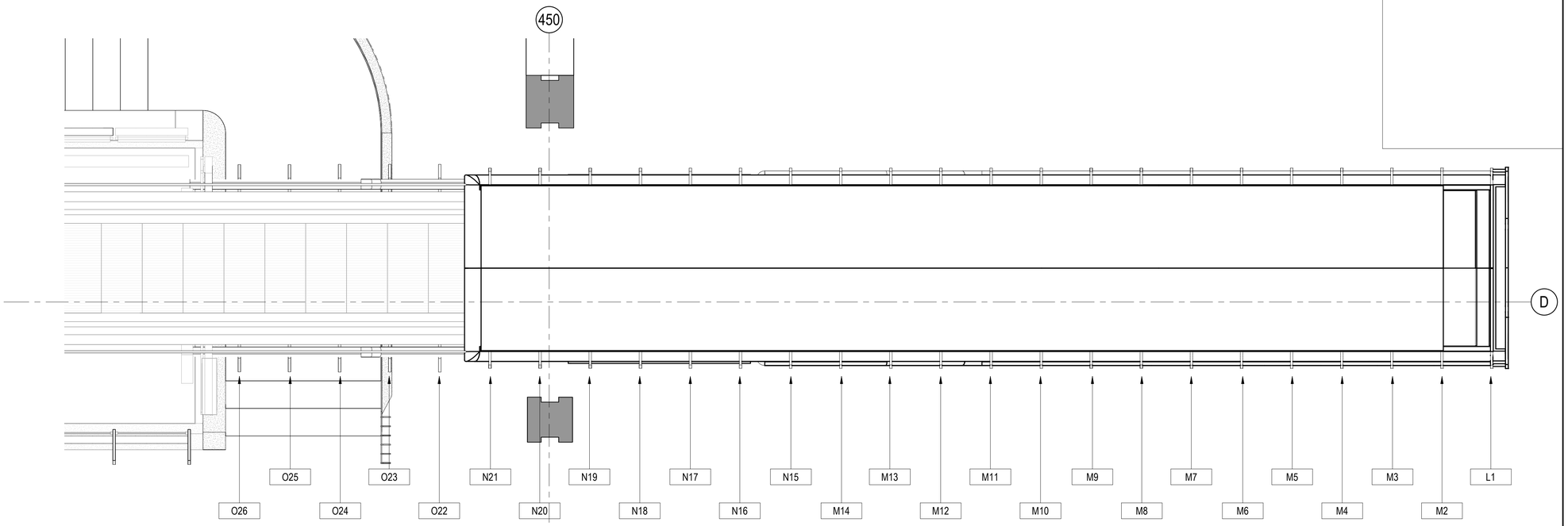

5 ENLARGED ESCALATOR PLAN - SOUTH
1/2" = 1'-0"

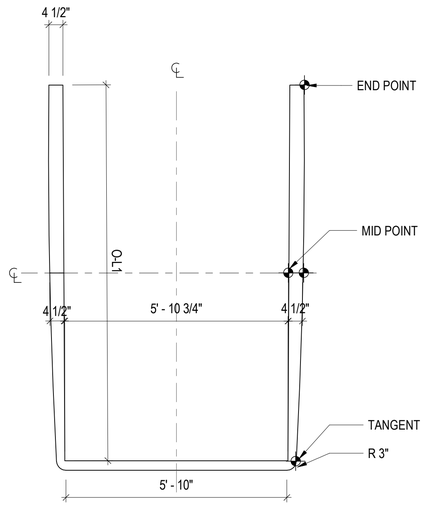

4 ELEVATION - RIB GEOMETRY TYPE O
1/2" = 1'-0"

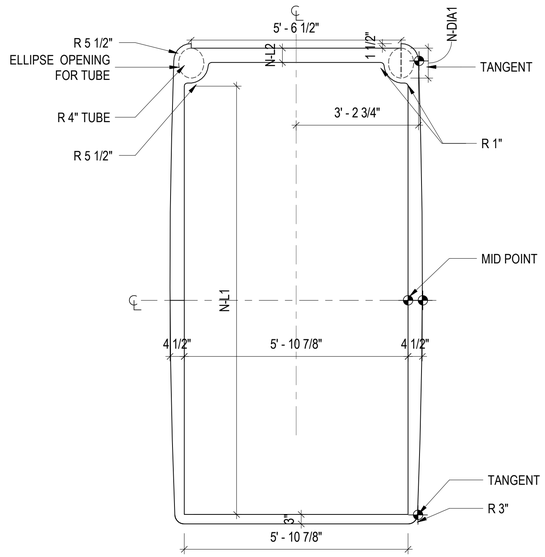

3 ELEVATION - RIB GEOMETRY TYPE N
1/2" = 1'-0"

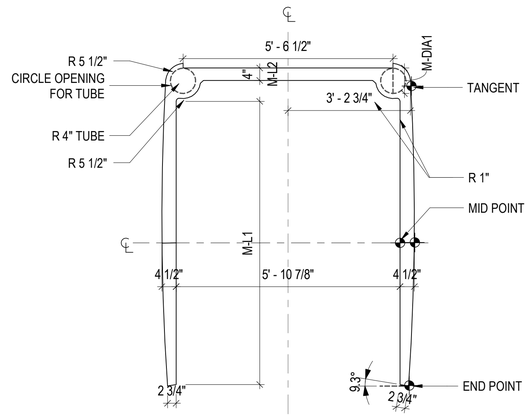

2 ELEVATION - RIB GEOMETRY TYPE M
1/2" = 1'-0"

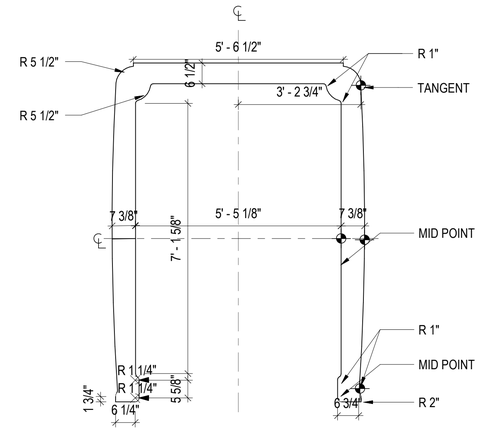

1 ELEVATION - RIB GEOMETRY TYPE L
1/2" = 1'-0"

DESIGN BY:											
DRAWN BY:		4	7/3/2023	ISSUED FOR BID							
CHECKED BY:											
APPROVED BY:		0	9/9/2022	ISSUED FOR PERMIT	Designe	Author	Checker				
CDOT/APPROVED BY:		NO.	DATE	REVISIONS	DES.	DRW.	CHK.	DCCO	CDOT		

TRANSYSTEMS
222 SOUTH RIVERSIDE PLAZA SUITE 610
CHICAGO, ILLINOIS 60606

SKIDMORE, OWINGS & MERRILL LLP
224 SOUTH MICHIGAN AVENUE, SUITE 1000
CHICAGO, ILLINOIS 60604

CHICAGO DEPARTMENT
OF TRANSPORTATION
DIVISION OF ENGINEERING

STATE / LAKE LOOP ELEVATED STATION
200 NORTH STATE STREET, CHICAGO, IL 60601

SPEC. NO.

RIB PROFILE GEOMETRY - ESCALATOR

DRAWING NO. A-429

CDOT PROJECT D-1-209 | DATE: 9/9/2022 | REVISION NO.

TOILET ACCESSORY SCHEDULE	
A	TOILET TISSUE DISPENSER
B	XLERATOR Hand Dryer
C	TOILET SEAT COVER DISPENSER
D-1	GRAB BAR, L-SHAPE
D-2	VERTICAL GRAB BAR
E	SANITARY NAPKIN DISPOSAL
F	MIRROR
G	COAT HOOK
H	RECESSED WASTED RECEPTACLE
J	SOAP DISPENSER
K	UTILITY SHELF - MOP/BROOM HOLDER
L	LOCKING METAL STORAGE CABINET

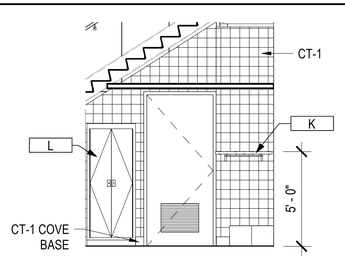

7 JANITOR'S CLOSET
1/4" = 1'-0"

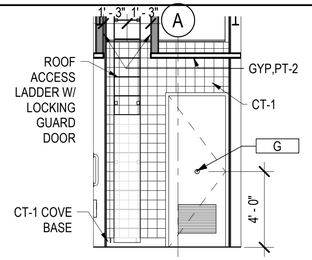

6 TOILET RM
1/4" = 1'-0"

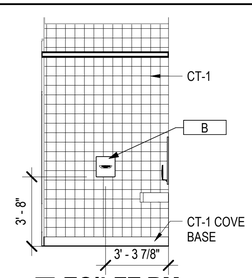

5 TOILET RM
1/4" = 1'-0"

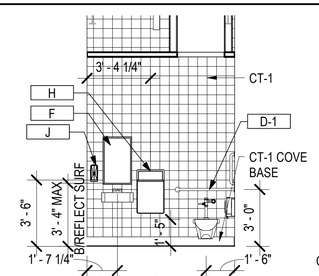

2 TOILET RM
1/4" = 1'-0"

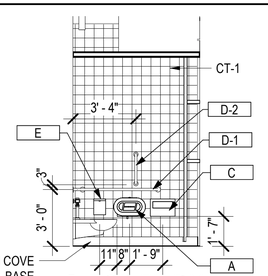

1 TOILET RM
1/4" = 1'-0"

SHEET NOTES:

1. IN ROOMS WITH FLOOR DRAINS, SLOPE TOP OF CAST IN PLACE CONC. 1% TO DRAIN

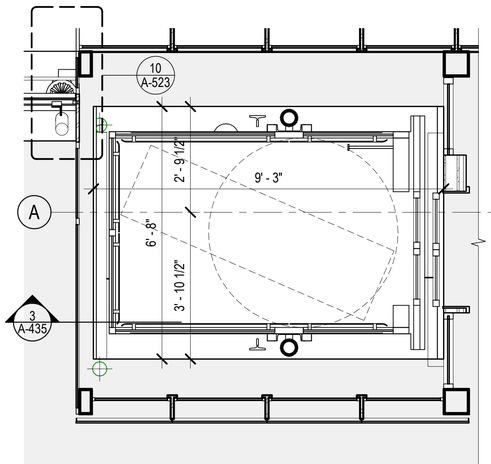

9 ENLARGED PLAN
1/2" = 1'-0"

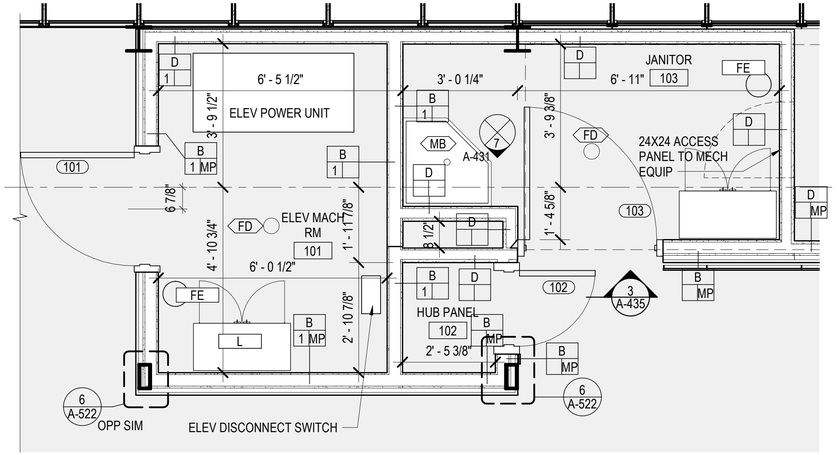

8 ENLARGED PLAN
1/2" = 1'-0"

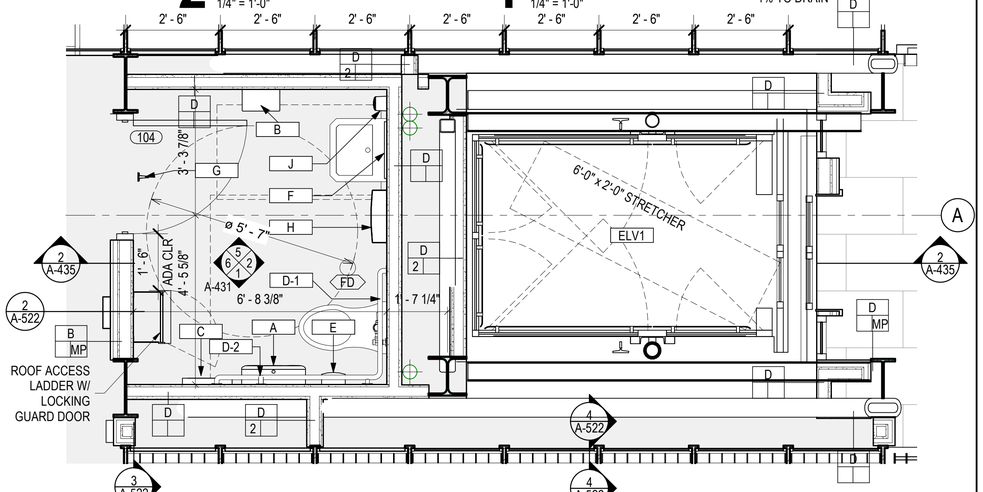

3 ENLARGED PLAN
1/2" = 1'-0"

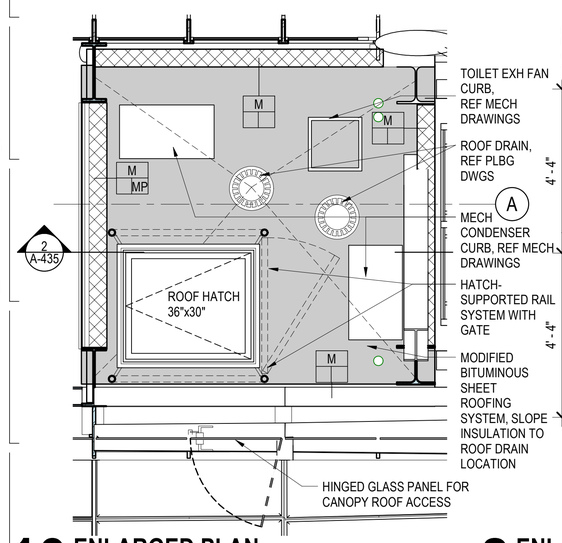

10 ENLARGED PLAN
1/2" = 1'-0"
NOTE: REF A-524 FOR ROOF DETAILS

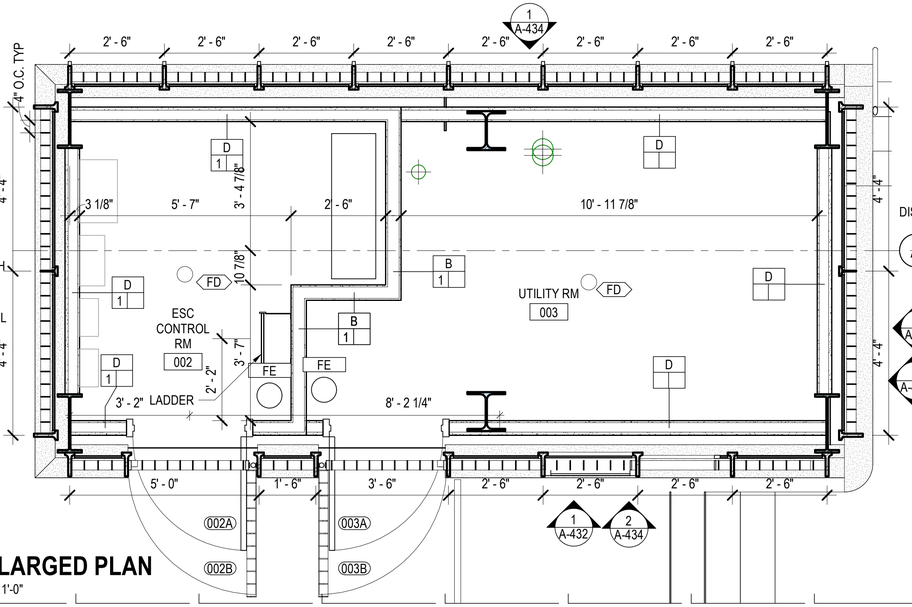

8 ENLARGED PLAN
1/2" = 1'-0"

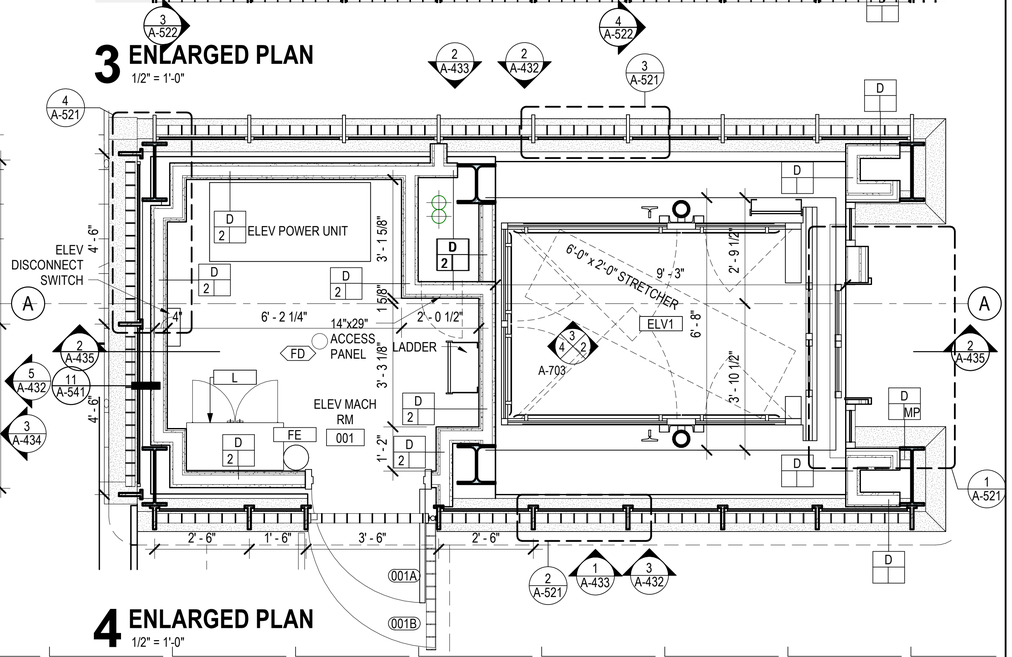

4 ENLARGED PLAN
1/2" = 1'-0"

DESIGN BY:										
DRAWN BY:		4	7/3/2023	ISSUED FOR BID						
CHECKED BY:										
APPROVED BY:		0	9/9/2022	ISSUED FOR PERMIT	MN	KH	SD			
CDOT/APPROVED BY:		NO.	DATE	REVISIONS	DES.	DRW.	CHK.	DCCO	CDOT	

TRANSYSTEMS
222 SOUTH RIVERSIDE PLAZA SUITE 610
CHICAGO, ILLINOIS 60606

SKIDMORE, OWINGS & MERRILL LLP
224 SOUTH MICHIGAN AVENUE, SUITE 1000
CHICAGO, ILLINOIS 60604

CHICAGO DEPARTMENT OF TRANSPORTATION
DIVISION OF ENGINEERING

STATE / LAKE LOOP ELEVATED STATION
200 NORTH STATE STREET, CHICAGO, IL 60601

ELEVATOR, MACHINE RM, JANITOR'S CLOSET & TOILET RM ENLARGED PLANS & INTERIOR ELEVATIONS

SPEC. NO.

DRAWING NO. A-431

CDOT PROJECT D-1-209

DATE: 9/9/2022

REVISION NO.

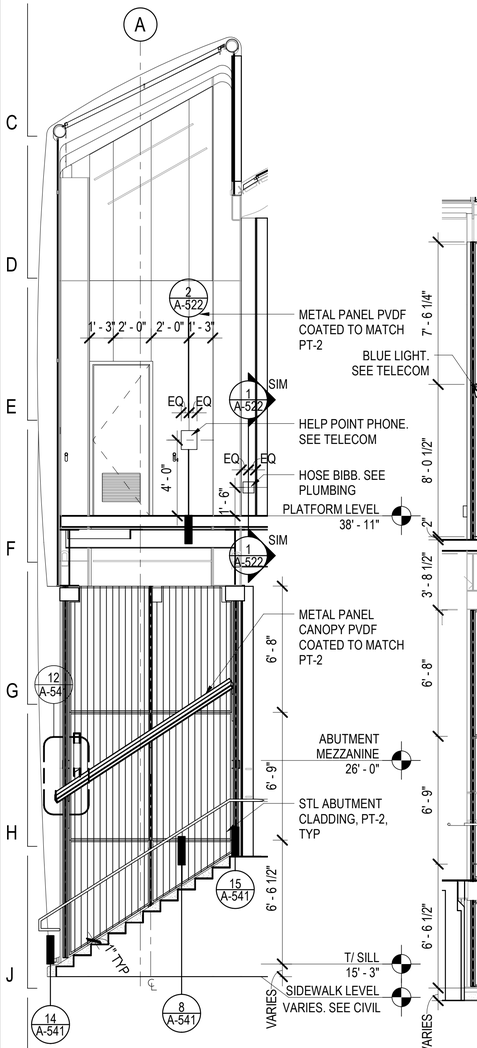

4 ELEVATION - WEST ABUTMENT WEST

1/4" = 1'-0"

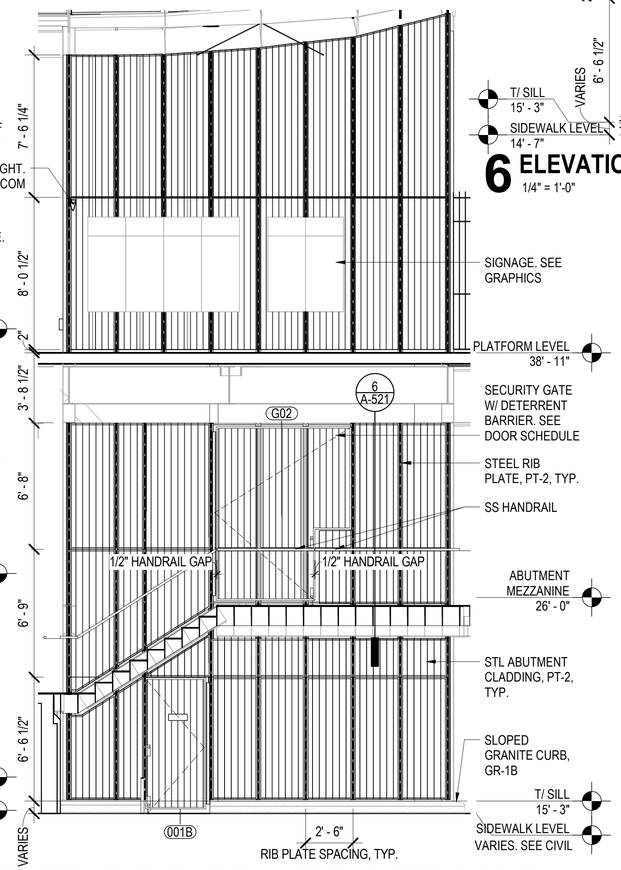

3 ELEVATION - WEST ABUTMENT SOUTH

1/4" = 1'-0"

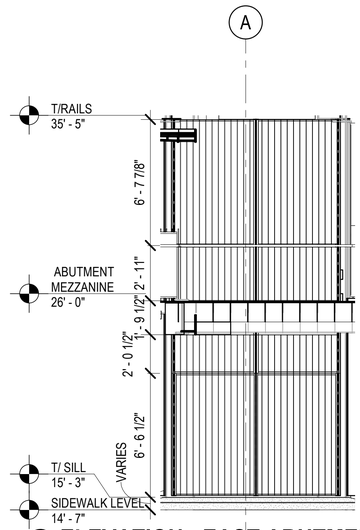

6 ELEVATION - EAST ABUTMENT WEST

1/4" = 1'-0"

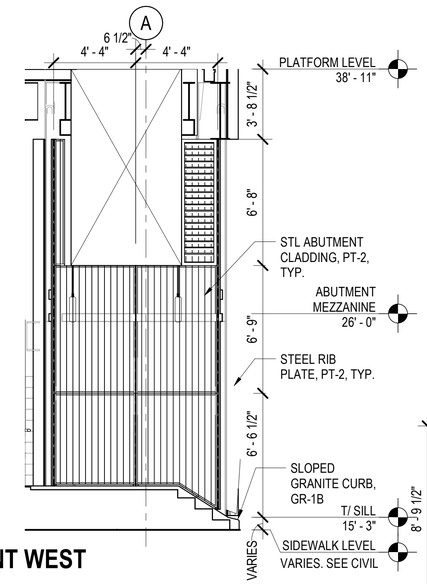

5 ELEVATION - EAST ABUTMENT EAST

1/4" = 1'-0"

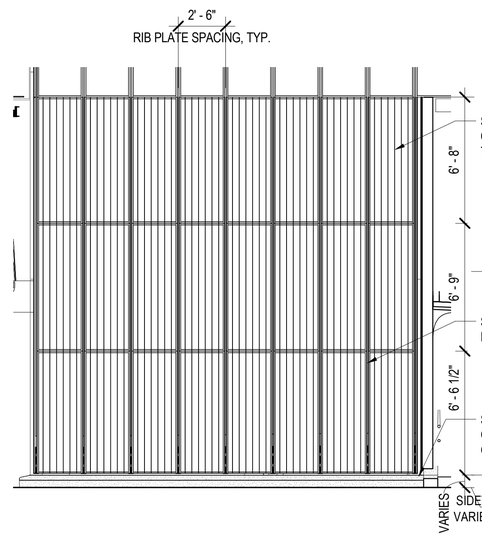

2 ELEVATION - EAST & WEST ABUTMENT NORTH

1/4" = 1'-0"

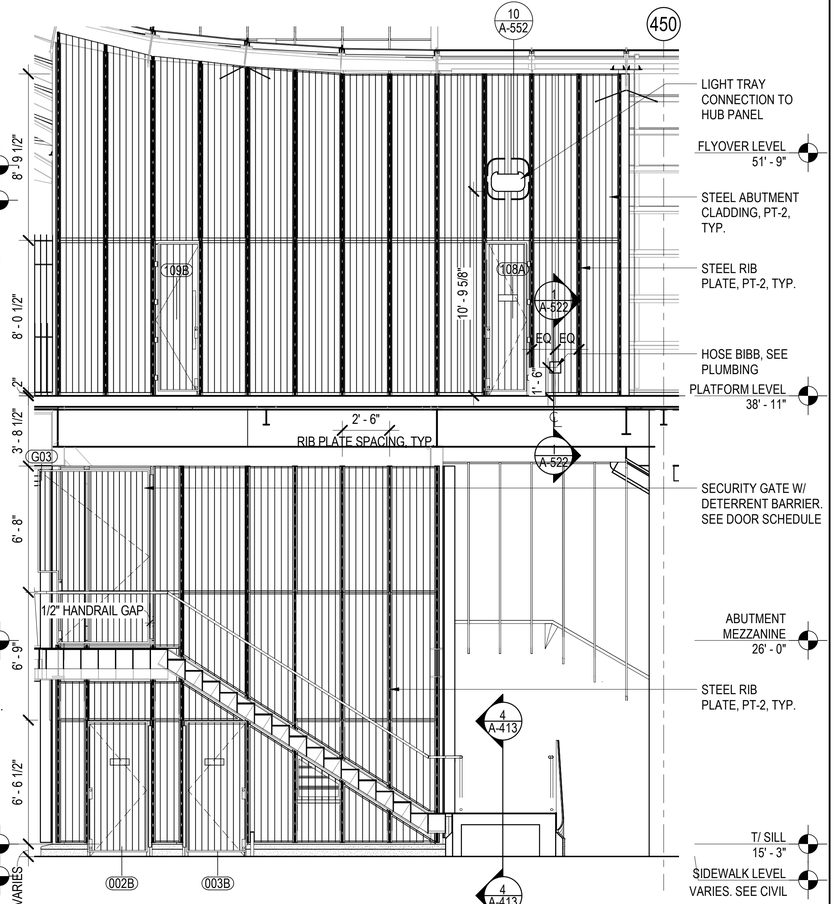

1 ELEVATION - EAST ABUTMENT SOUTH

1/4" = 1'-0"

GENERAL NOTES:

1. REFER TO DOOR SCHEDULE FOR GATE & HARDWARE INFORMATION

DESIGN BY:									
DRAWN BY:		4	7/3/2023	ISSUED FOR BID					
CHECKED BY:									
APPROVED BY:		0	9/9/2022	ISSUED FOR PERMIT	MN	KH	SD		
CDOT/APPROVED BY:		NO.	DATE	REVISIONS	DES.	DRW.	CHK.	DCCO	CDOT

TRANSYSTEMS
222 SOUTH RIVERSIDE PLAZA SUITE 610
CHICAGO, ILLINOIS 60606

SKIDMORE, OWINGS & MERRILL LLP
224 SOUTH MICHIGAN AVENUE, SUITE 1000
CHICAGO, ILLINOIS 60604

CHICAGO DEPARTMENT OF TRANSPORTATION
DIVISION OF ENGINEERING

STATE / LAKE LOOP ELEVATED STATION
200 NORTH STATE STREET, CHICAGO, IL 60601

SPEC. NO.

ENLARGED ABUTMENT ELEVATIONS

DRAWING NO.
A-432

CDOT PROJECT D-1-209

DATE: 9/9/2022

REVISION NO.

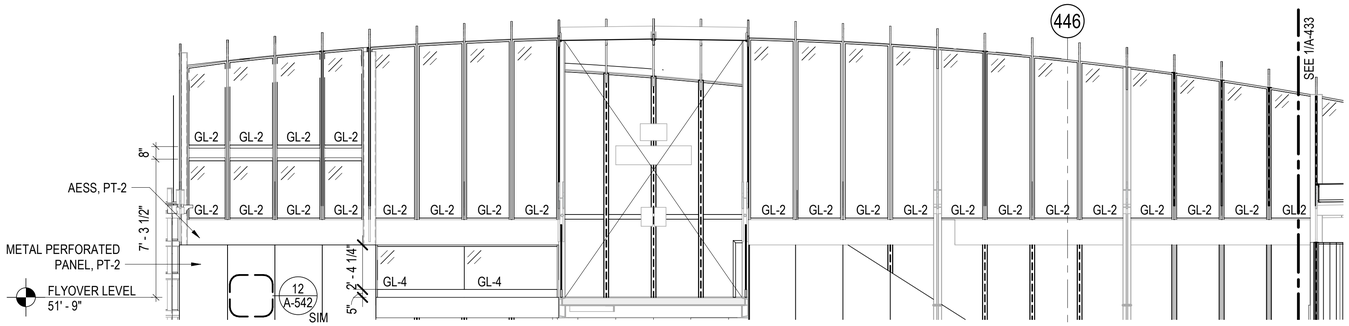

NOTE: BARREL VAULT HIDDEN FOR CLARITY

3 ELEVATION - WEST ABUTMENT FLYOVER SOUTH - GLASS

1/4" = 1'-0"

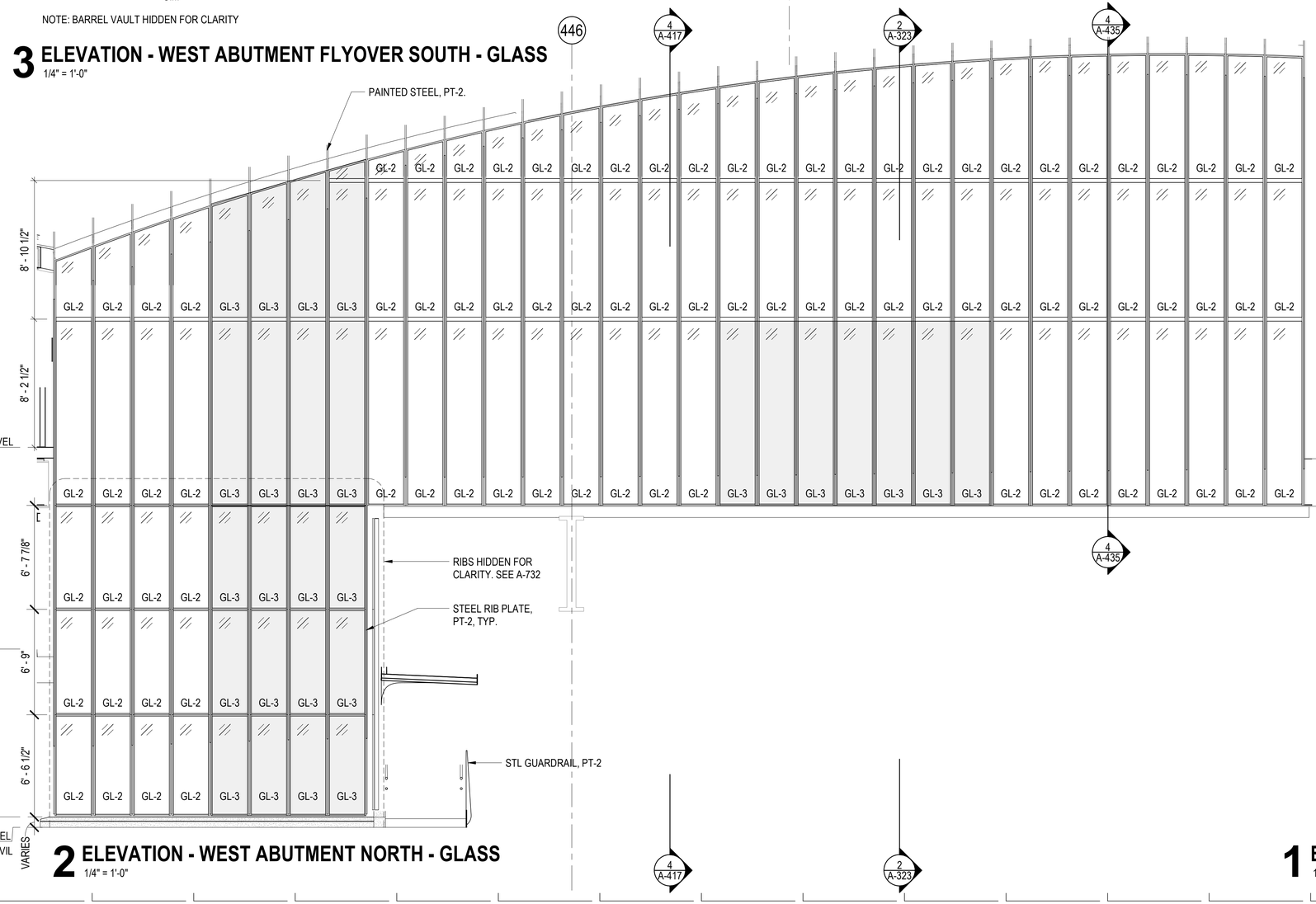

2 ELEVATION - WEST ABUTMENT NORTH - GLASS

1/4" = 1'-0"

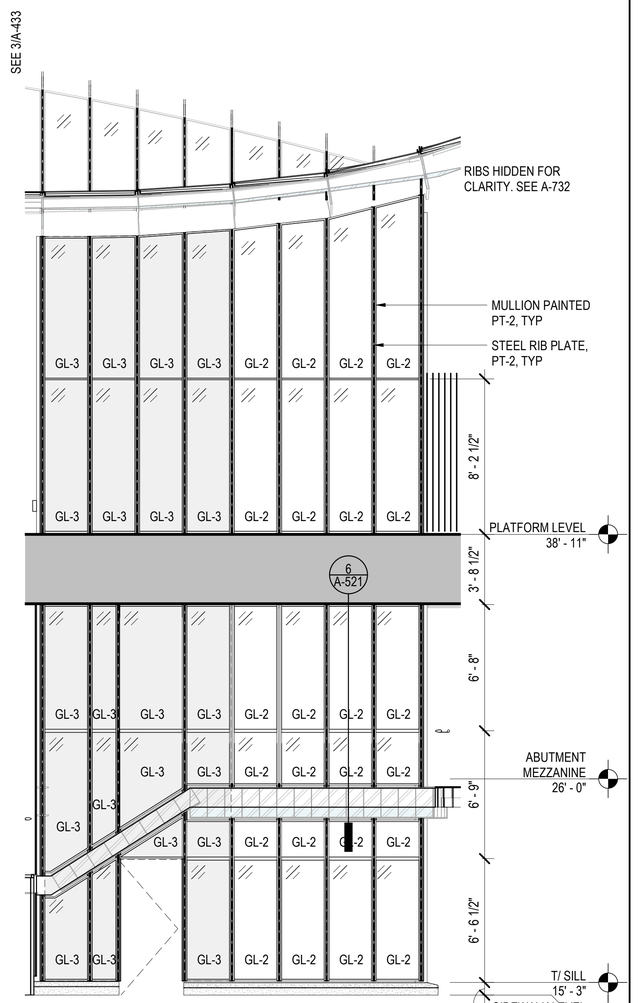

1 ELEVATION - WEST ABUTMENT SOUTH - GLASS

1/4" = 1'-0"

DESIGN BY:										
DRAWN BY:		4	7/3/2023	ISSUED FOR BID						
CHECKED BY:										
APPROVED BY:		0	9/9/2022	ISSUED FOR PERMIT	MN	KH	SD			
CDOT/APPROVED BY:		NO.	DATE	REVISIONS	DES.	DRW.	CHK.	DCCO	CDOT	

TRANSYSTEMS
222 SOUTH RIVERSIDE PLAZA SUITE 610
CHICAGO, ILLINOIS 60606

SKIDMORE, OWINGS & MERRILL LLP
224 SOUTH MICHIGAN AVENUE, SUITE 1000
CHICAGO, ILLINOIS 60604

CHICAGO DEPARTMENT OF TRANSPORTATION
DIVISION OF ENGINEERING

STATE / LAKE LOOP ELEVATED STATION
200 NORTH STATE STREET, CHICAGO, IL 60601

SPEC. NO.

ENLARGED ABUTMENT ELEVATIONS

DRAWING NO. A-433

CDOT PROJECT D-1-209 | DATE: 9/9/2022 | REVISION NO.

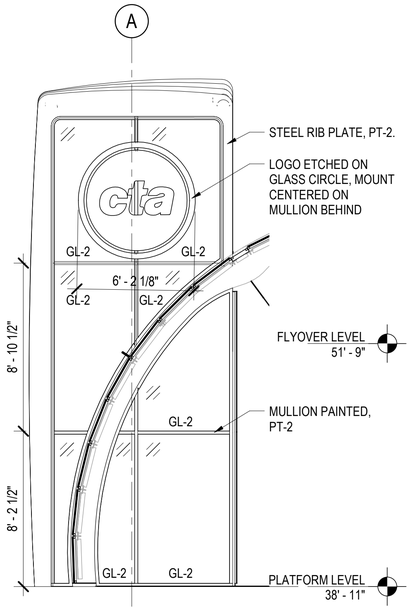

6 ELEV - WEST ABUTMENT WEST TOP
1/4" = 1'-0"

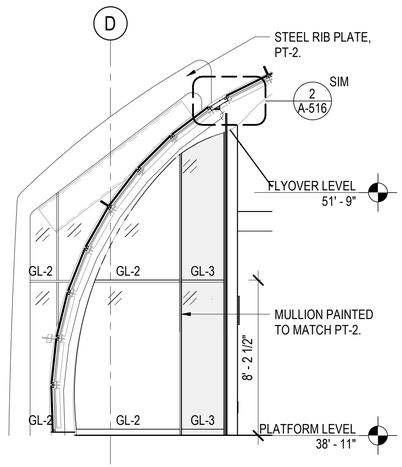

4 ELEV - EAST ABUTMENT EAST TOP
1/4" = 1'-0"

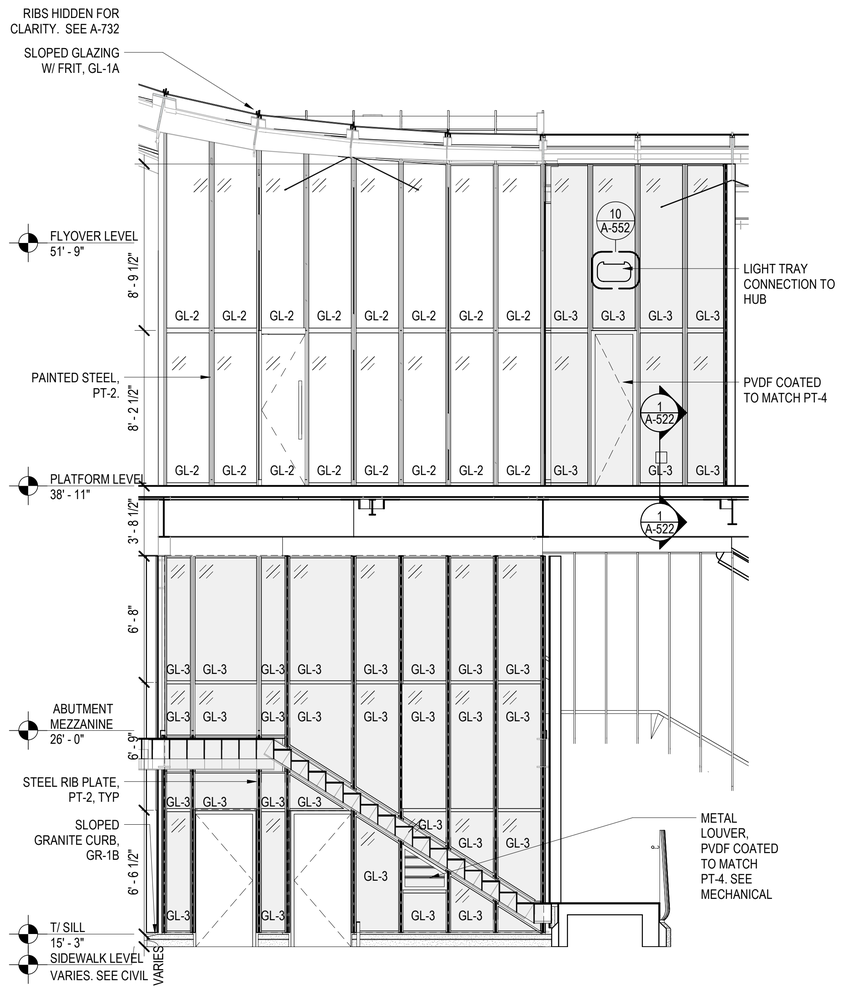

2 ELEV - EAST ABUTMENT SOUTH - GLASS
1/4" = 1'-0"

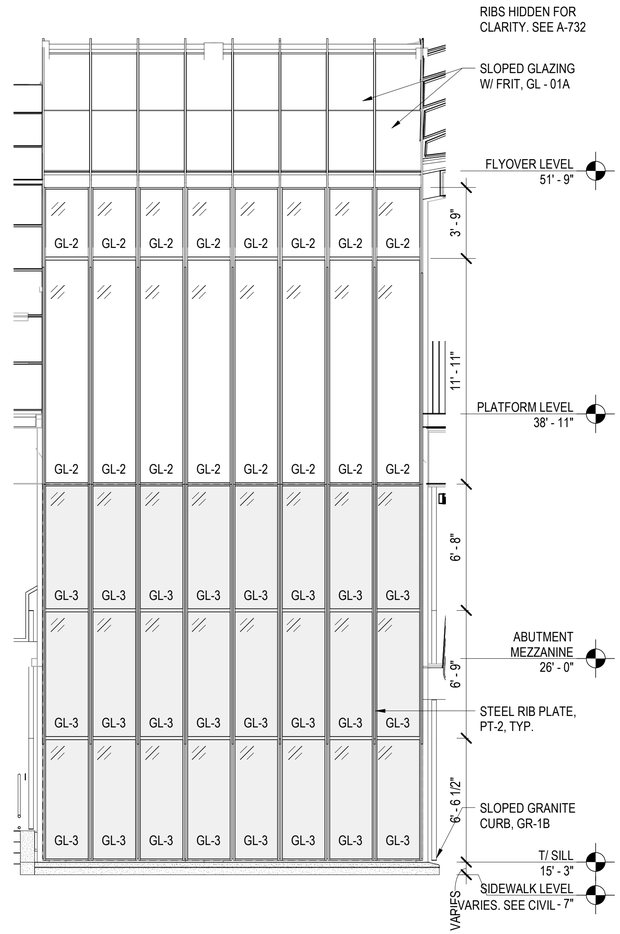

1 ELEV - EAST ABUTMENT NORTH - GLASS
1/4" = 1'-0"

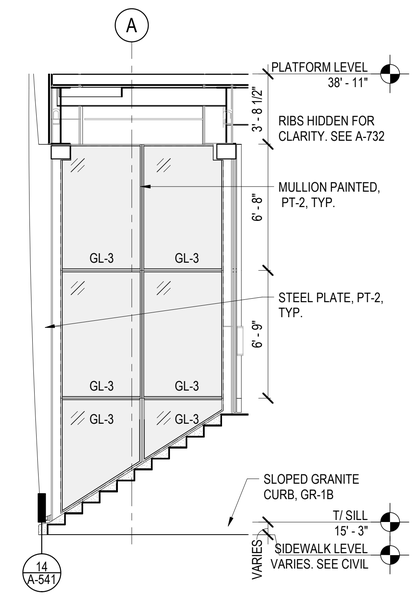

5 ELEV - WEST ABUTMENT WEST GLASS
1/4" = 1'-0"

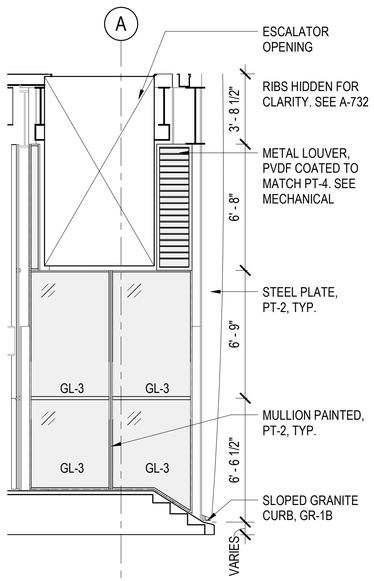

3 ELEV - EAST ABUTMENT EAST - GLASS
1/4" = 1'-0"

DESIGN BY:										
DRAWN BY:		4	7/3/2023	ISSUED FOR BID						
CHECKED BY:										
APPROVED BY:		0	9/9/2022	ISSUED FOR PERMIT	MN	KH	SD			
CDOT/APPROVED BY:		NO.	DATE	REVISIONS	DES.	DRW.	CHK.	DCCO	CDOT	

TRANSYSTEMS
222 SOUTH RIVERSIDE PLAZA SUITE 610
CHICAGO, ILLINOIS 60606

SKIDMORE, OWINGS & MERRILL LLP
224 SOUTH MICHIGAN AVENUE, SUITE 1000
CHICAGO, ILLINOIS 60604

CHICAGO DEPARTMENT OF TRANSPORTATION
DIVISION OF ENGINEERING

STATE / LAKE LOOP ELEVATED STATION
200 NORTH STATE STREET, CHICAGO, IL 60601

SPEC. NO.

ENLARGED ABUTMENT ELEVATIONS

DRAWING NO. A-434

CDOT PROJECT D-1-209 | DATE: 9/9/2022 | REVISION NO.

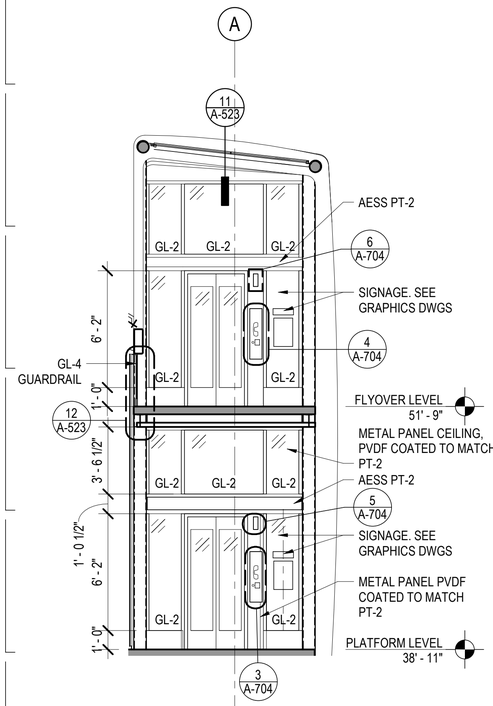

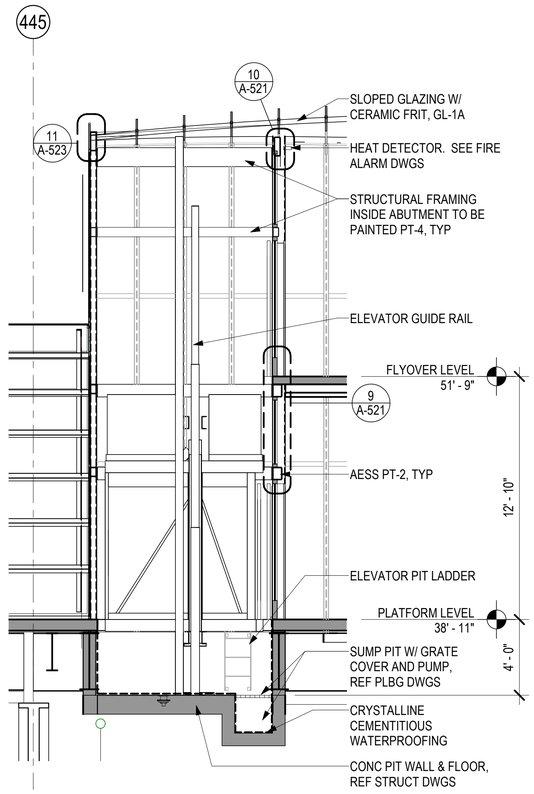

4 ELEVATION - FLYOVER ELEVATOR
1/4" = 1'-0"

3 SECTION - FLYOVER ELEVATOR
1/4" = 1'-0"

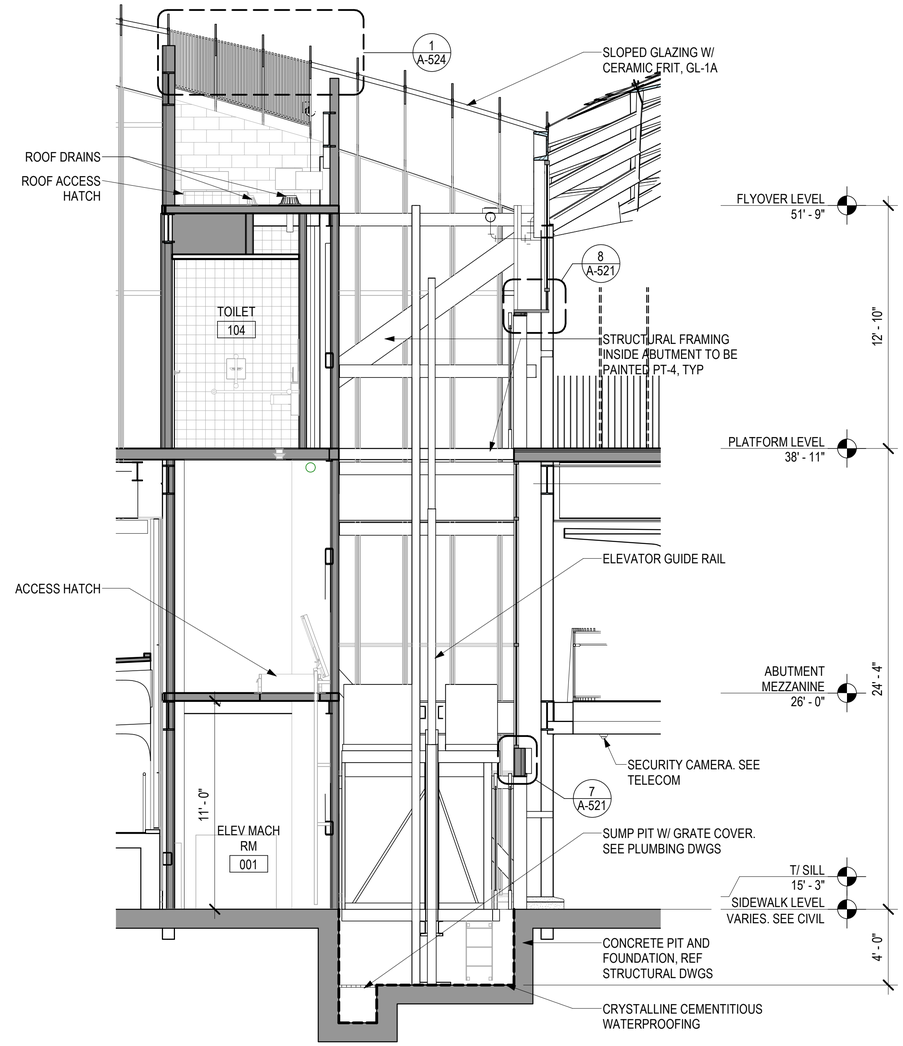

2 SECTION - STREET TO PLATFORM ELEVATOR
1/4" = 1'-0"

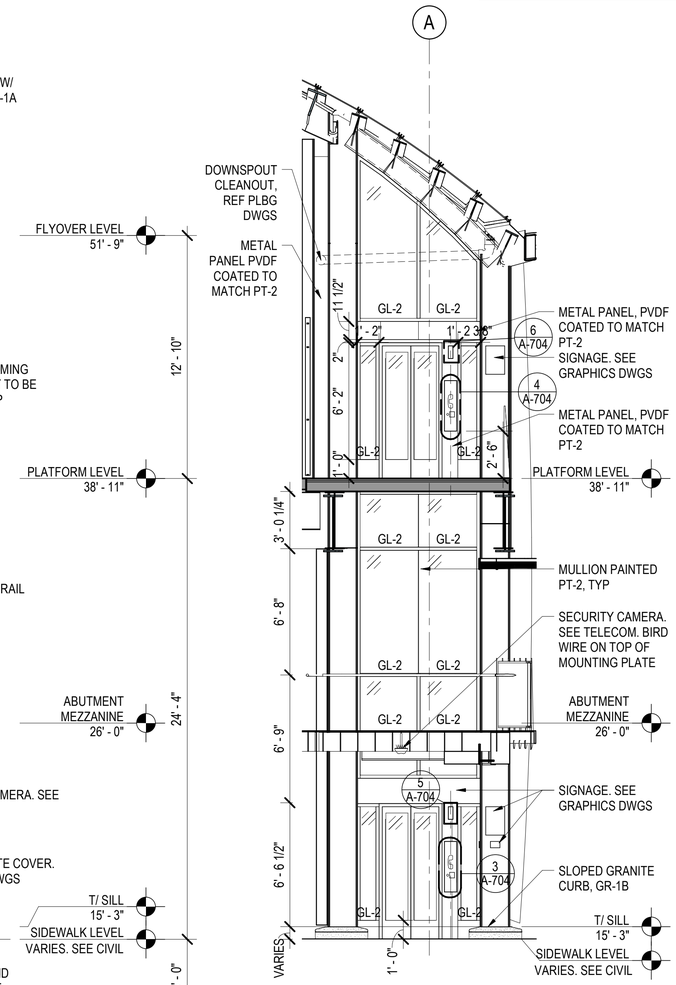

1 ELEVATION - STREET TO PLATFORM ELEVATOR
1/4" = 1'-0"

DESIGN BY:										
DRAWN BY:		4	7/3/2023	ISSUED FOR BID						
CHECKED BY:										
APPROVED BY:		0	9/9/2022	ISSUED FOR PERMIT	MN	KH	SD			
CDOT/APPROVED BY:		NO.	DATE	REVISIONS	DES.	DRW.	CHK.	DCCO	CDOT	

TranSystems
TRANSYSTEMS
222 SOUTH RIVERSIDE PLAZA SUITE 610
CHICAGO, ILLINOIS 60606

SOM
SKIDMORE, OWINGS & MERRILL LLP
224 SOUTH MICHIGAN AVENUE, SUITE 1000
CHICAGO, ILLINOIS 60604

CDOT
CHICAGO DEPARTMENT OF TRANSPORTATION
DIVISION OF ENGINEERING

STATE / LAKE LOOP ELEVATED STATION
200 NORTH STATE STREET, CHICAGO, IL 60601

ENLARGED ELEVATOR ELEVATION & SECTIONS

SPEC. NO.

DRAWING NO.
A-435

CDOT PROJECT D-1-209

DATE: 9/9/2022

REVISION NO.

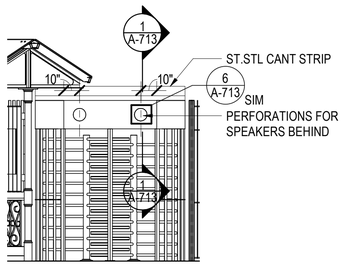

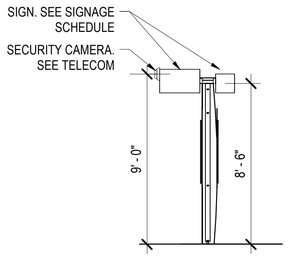

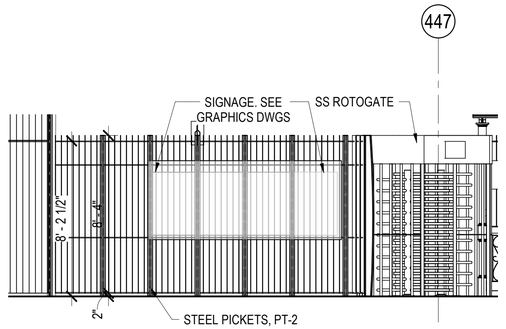

6 ELEVATION
1/4" = 1'-0"

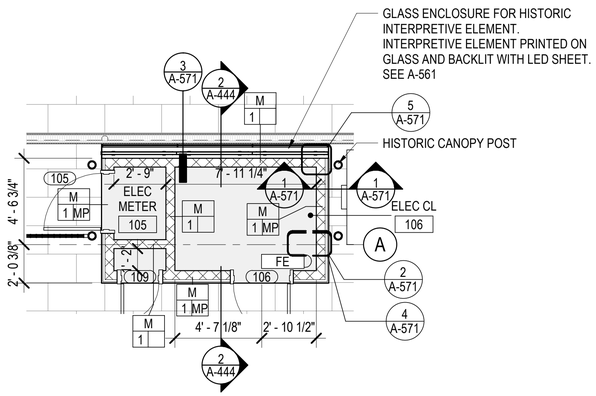

5 ELEVATION
1/4" = 1'-0"

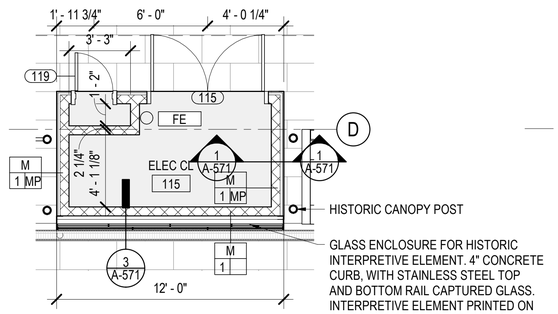

4 ELEVATION - HIGH BARRIER GATE
1/4" = 1'-0"

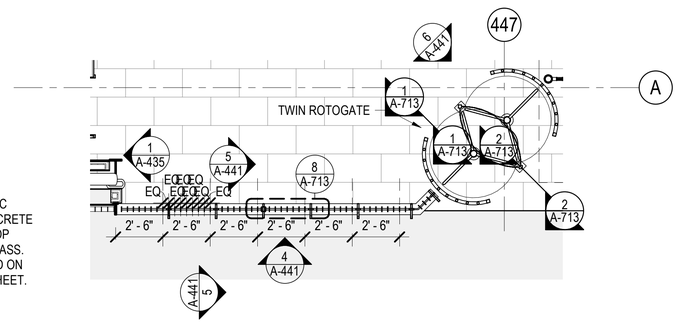

3 PLAN - NORTH ELEC CLOSET
1/4" = 1'-0"

2 PLAN - SOUTH ELEC CLOSET
1/4" = 1'-0"

1 ENLARGED PLAN - HIGH BARRIER GATE
1/4" = 1'-0"

DESIGN BY:									
DRAWN BY:		4	7/3/2023	ISSUED FOR BID					
CHECKED BY:									
APPROVED BY:		0	9/9/2022	ISSUED FOR PERMIT	MN	KH	SD		
CDOT/APPROVED BY:		NO.	DATE	REVISIONS	DES.	DRW.	CHK.	DCCO	CDOT

TranSystems
TRANSYSTEMS
222 SOUTH RIVERSIDE PLAZA SUITE 610
CHICAGO, ILLINOIS 60606

SOM
SKIDMORE, OWINGS & MERRILL LLP
224 SOUTH MICHIGAN AVENUE, SUITE 1000
CHICAGO, ILLINOIS 60604

CDOT
CHICAGO DEPARTMENT
OF TRANSPORTATION
DIVISION OF ENGINEERING

STATE / LAKE LOOP ELEVATED STATION
200 NORTH STATE STREET, CHICAGO, IL 60601

SPEC. NO.

ENLARGED STATION HOUSE PLANS & ELEVATIONS

DRAWING NO.
A-441

CDOT PROJECT D-1-209

DATE: 9/9/2022

REVISION NO.

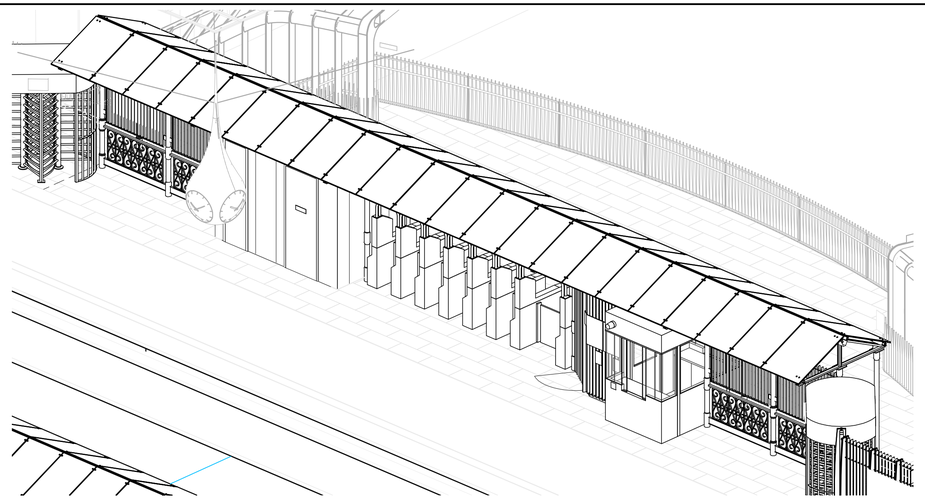

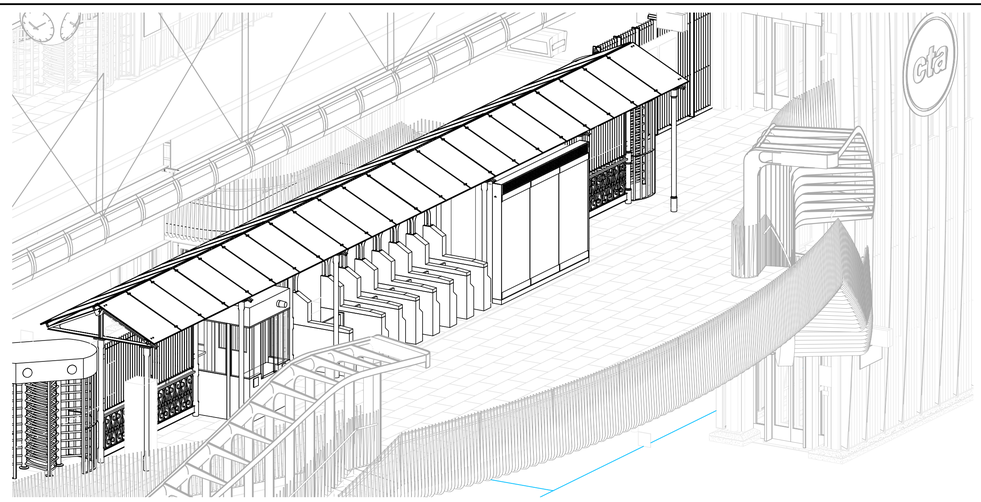

3 ISOMETRIC - FARE ARRAY CANOPY (FROM PAID SIDE)

4 ISOMETRIC - FARE ARRAY CANOPY (FROM UNPAID SIDE)

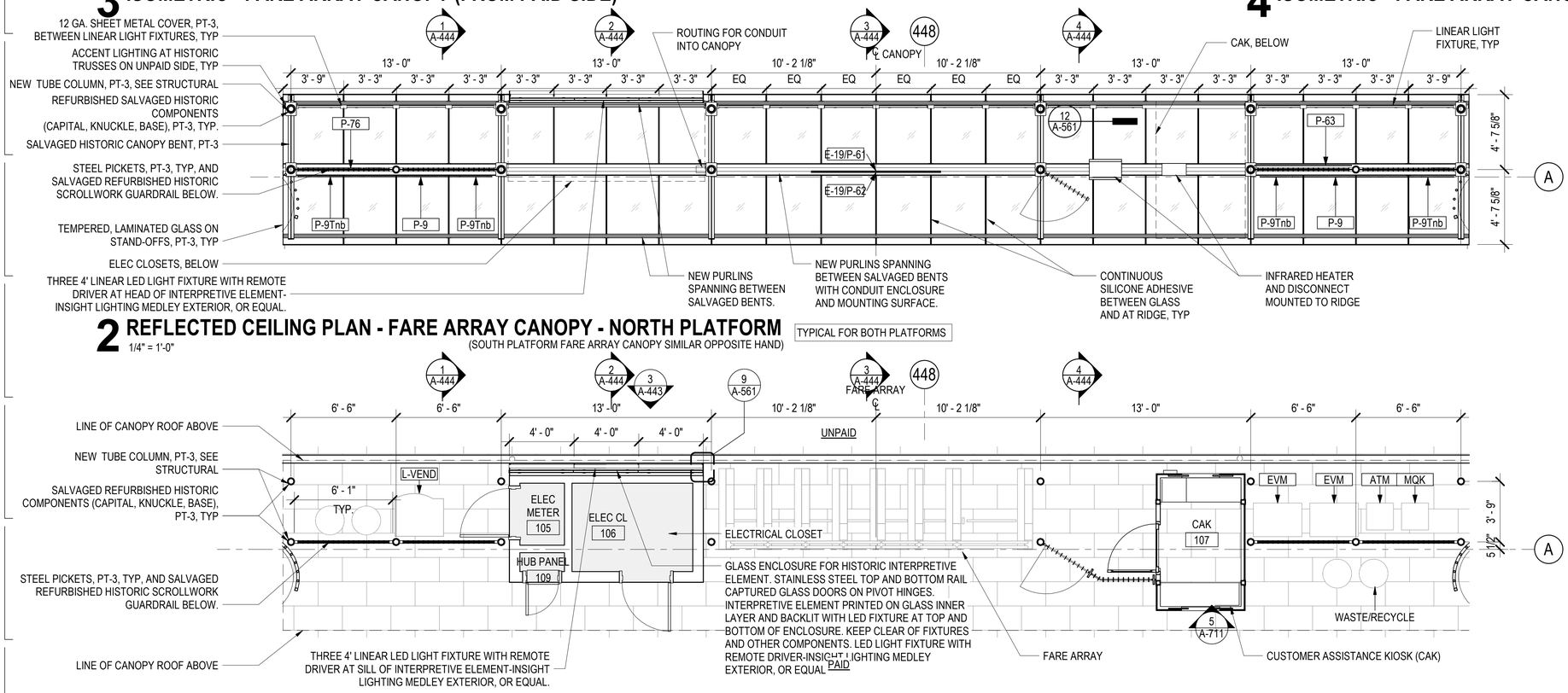

2 REFLECTED CEILING PLAN - FARE ARRAY CANOPY - NORTH PLATFORM

1/4" = 1'-0"

(SOUTH PLATFORM FARE ARRAY CANOPY SIMILAR OPPOSITE HAND)

TYPICAL FOR BOTH PLATFORMS

1 ENLARGED PLAN - FARE ARRAY CANOPY - NORTH PLATFORM

1/4" = 1'-0"

(SOUTH PLATFORM FARE ARRAY CANOPY SIMILAR OPPOSITE HAND)

FARE ARRAY CANOPY NOTES:

1. REFER TO DEMO SHEETS AD-111, AD-112 AND AD-113 FOR SELECTIVE DEMOLITION AND SALVAGING OF EXISTING HISTORIC CANOPY COMPONENTS AND MATERIAL. REFURBISH PER SPECIFICATION SECTIONS 05 03 71 AND 05 03 83.
2. REFER TO AD-112 FOR SCHEDULE OF SALVAGED COMPONENTS.
3. PAINT ALL NEW AND HISTORIC FARE ARRAY CANOPY STEEL AND CAST IRON TO MATCH, PT-3.
4. REFER TO SPECIFICATION FOR TREATMENT OF SALVAGED HISTORIC COMPONENTS AND MATERIAL.
5. CONCEAL ALL CONDUITS ABOVE HISTORIC BENTS AND WITHIN CONDUIT ENCLOSURE AT RIDGE OF CANOPY. PAINT CONDUITS TO MATCH.
6. FARE ARRAY CANOPY COLUMNS EXTEND BELOW PLATFORM LEVEL TO STEEL STRUCTURE BELOW PLATFORM. SALVAGED COLUMN BASES SHALL BE ANCHORED TO TOP OF CONCRETE SLAB. FIT GRANITE PAVERS AROUND BASE. SEE STRUCTURAL DRAWINGS.
7. INSTALL CONTINUOUS SILICONE ADHESIVE BETWEEN GLASS AT RIDGE AND BETWEEN PANELS.
8. FIELD COAT ALL SITE WELDS WITH PT-3.
9. FILL ALL EXISTING RIVET AND OTHER ATTACHMENT HOLES IN EXISTING HISTORIC BENT WITH WELDS AND GRIND SMOOTH TO RECEIVE PT-3.
10. REFURBISHED SALVAGED ITEMS REQUIRED PER FARE ARRAY CANOPY:

BENTS	6
GUARDRAIL SECTIONS	4
CAPITALS	12
KNUCKLES	6
BASES	12
NEWELS	2
NEWEL BASES	2

DESIGN BY:										
DRAWN BY:		4	7/3/2023	ISSUED FOR BID						
CHECKED BY:										
APPROVED BY:		0	9/9/2022	ISSUED FOR PERMIT	Designe	Author	Checker			
CDOT/APPROVED BY:		NO.	DATE	REVISIONS	DES.	DRW.	CHK.	DCCO	CDOT	

TRANSYSTEMS
222 SOUTH RIVERSIDE PLAZA SUITE 610
CHICAGO, ILLINOIS 60606

SKIDMORE, OWINGS & MERRILL LLP
224 SOUTH MICHIGAN AVENUE, SUITE 1000
CHICAGO, ILLINOIS 60604

JOHNSON LASKY KINDELIN ARCHITECTS
230 WEST HURON STREET, SUITE 510
CHICAGO, ILLINOIS 60654

CHICAGO DEPARTMENT OF TRANSPORTATION
DIVISION OF ENGINEERING

STATE / LAKE LOOP ELEVATED STATION
200 NORTH STATE STREET, CHICAGO, IL 60601

SPEC. NO.

FARE ARRAY CANOPY ENLARGED PLAN & RCP

DRAWING NO. A-442

CDOT PROJECT D-1-209 | DATE: 9/9/2022 | REVISION NO.

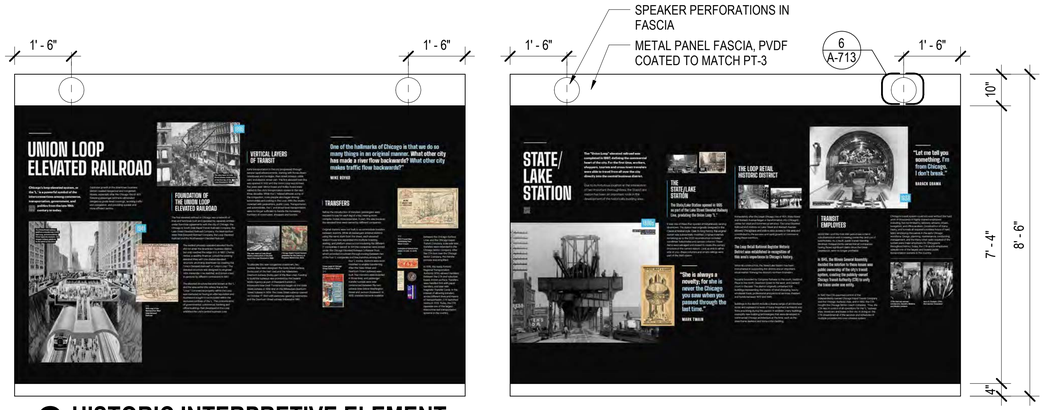

3 HISTORIC INTERPRETIVE ELEMENT

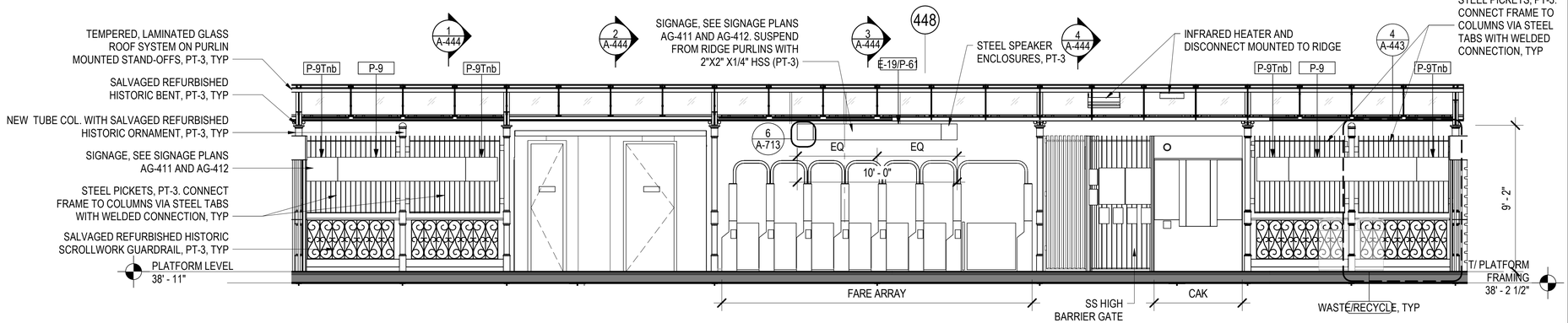

2 ELEVATION - FARE ARRAY CANOPY - NORTH PLATFORM - PAID

(SOUTH PLATFORM FARE ARRAY CANOPY SIMILAR OPPOSITE HAND)

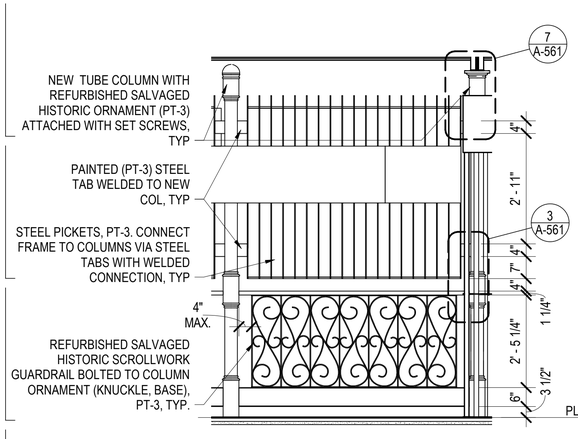

4 DETAIL ELEVATION - FARE ARRAY CANOPY

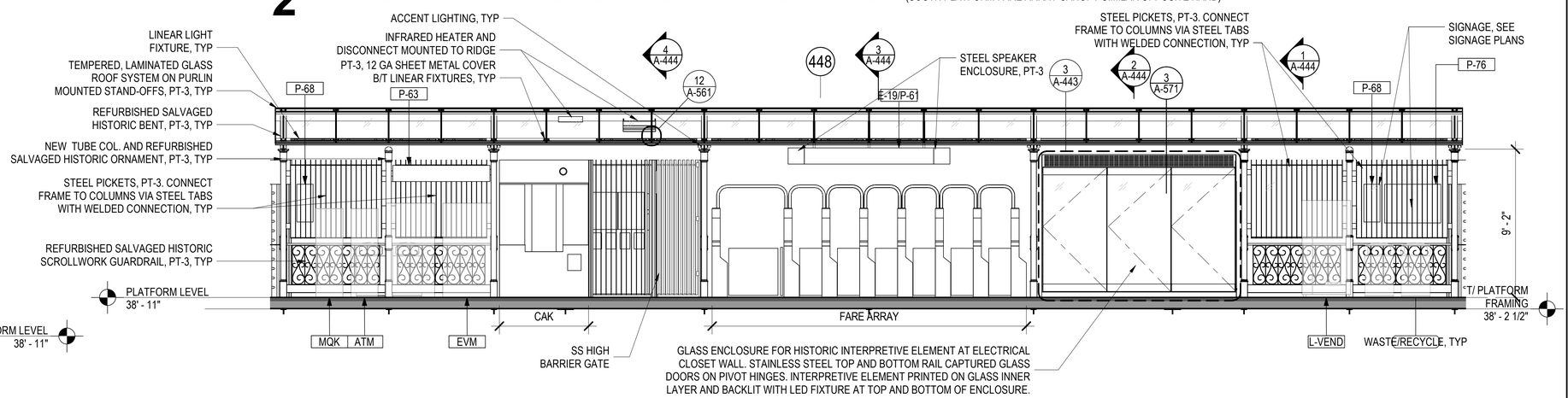

1 ELEVATION - FARE ARRAY CANOPY - NORTH PLATFORM - UNPAID

(SOUTH PLATFORM FARE ARRAY CANOPY SIMILAR OPPOSITE HAND)

DESIGN BY:										
DRAWN BY:		4	7/3/2023	ISSUED FOR BID						
CHECKED BY:										
APPROVED BY:		0	9/9/2022	ISSUED FOR PERMIT	Designe	Author	Checker			
CDOT/APPROVED BY:		NO.	DATE	REVISIONS	DES.	DRW.	CHK.	DCCO	CDOT	

TRANSYSTEMS
222 SOUTH RIVERSIDE PLAZA SUITE 610
CHICAGO, ILLINOIS 60606

SKIDMORE, OWINGS & MERRILL LLP
224 SOUTH MICHIGAN AVENUE, SUITE 1000
CHICAGO, ILLINOIS 60604

JOHNSON LASKY KINDELIN ARCHITECTS
230 WEST HURON STREET, SUITE 510
CHICAGO, ILLINOIS 60654

CHICAGO DEPARTMENT OF TRANSPORTATION
DIVISION OF ENGINEERING

STATE / LAKE LOOP ELEVATED STATION
200 NORTH STATE STREET, CHICAGO, IL 60601

FARE ARRAY CANOPY ELEVATIONS

CDOT PROJECT D-1-209 | DATE: 9/9/2022

SPEC. NO.

DRAWING NO. A-443

REVISION NO.

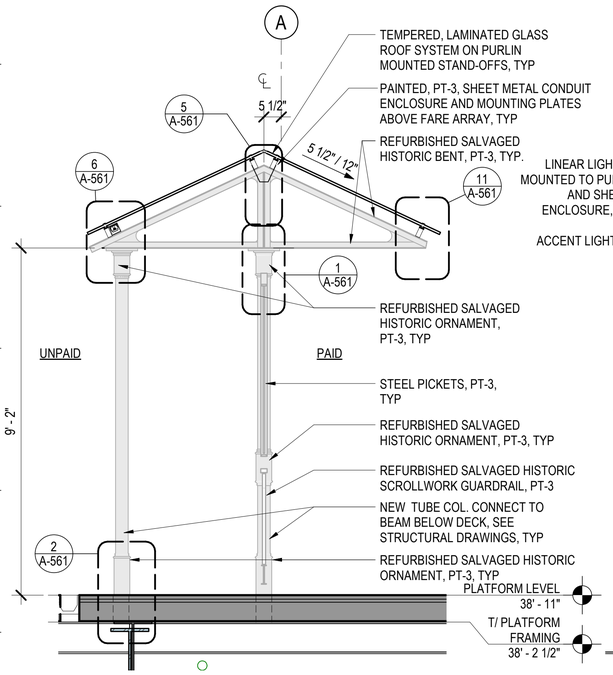

1 SECTION - FARE ARRAY CANOPY, TYP.

1/2" = 1'-0"

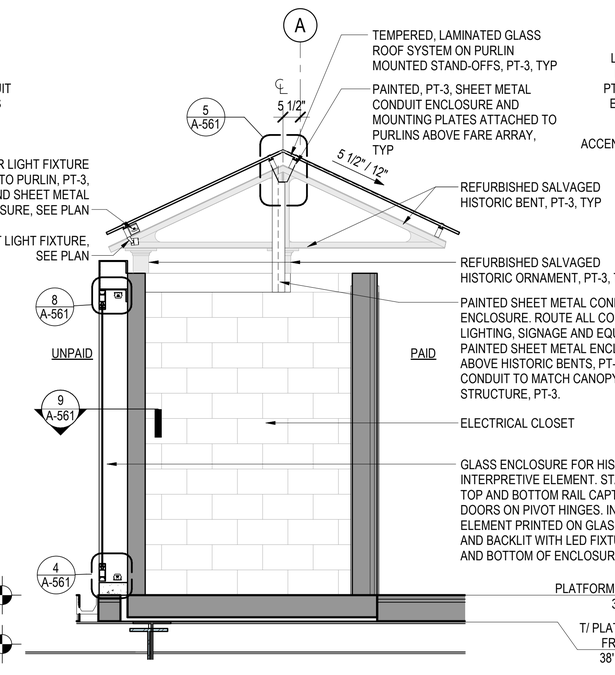

2 SECTION @ ELEC. CLOSET

1/2" = 1'-0"

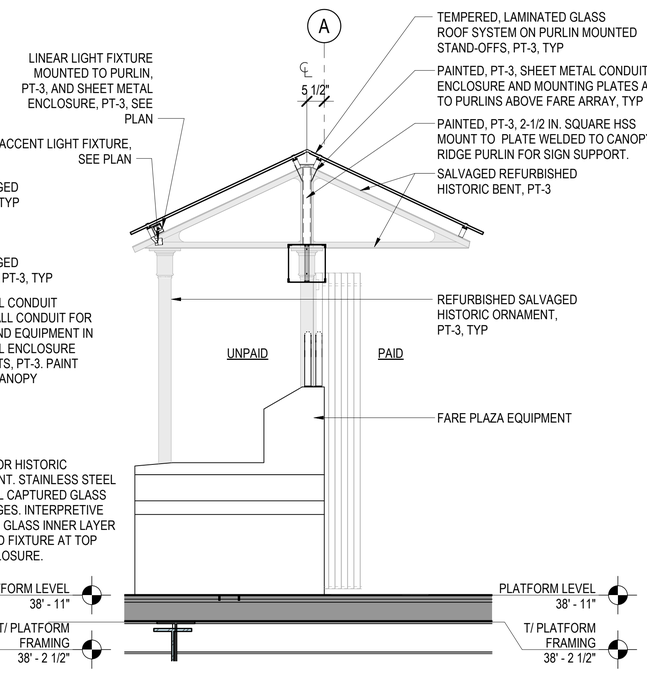

3 SECTION @ FARE ILLUMINATED SIGNS

1/2" = 1'-0"

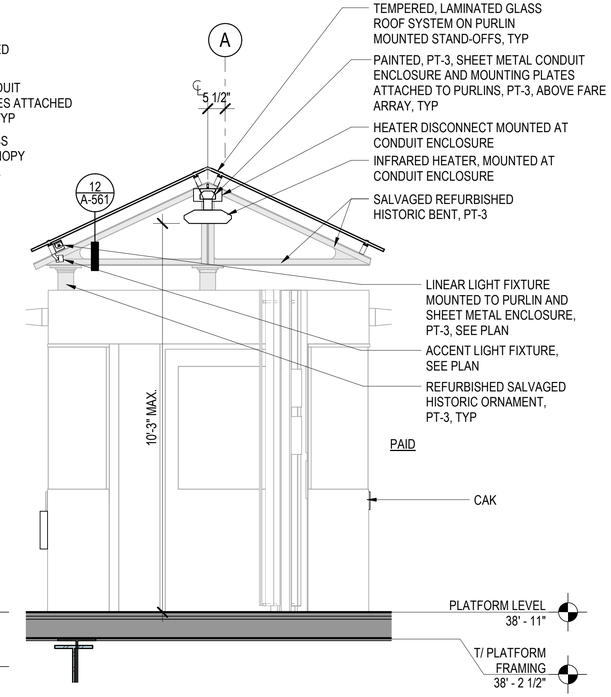

4 SECTION @ CAK & HTR

1/2" = 1'-0"

DESIGN BY:											
DRAWN BY:		4	7/3/2023	ISSUED FOR BID							
CHECKED BY:											
APPROVED BY:		0	9/9/2022	ISSUED FOR PERMIT	Designe	Author	Checker				
CDOT/APPROVED BY:		NO.	DATE	REVISIONS	DES.	DRW.	CHK.	DCCO	CDOT		

TranSystems
TRANSYSTEMS
222 SOUTH RIVERSIDE PLAZA SUITE 610
CHICAGO, ILLINOIS 60606

SOM
SKIDMORE, OWINGS & MERRILL LLP
224 SOUTH MICHIGAN AVENUE, SUITE 1000
CHICAGO, ILLINOIS 60604

JLK
JOHNSON LASKY KINDELIN ARCHITECTS
230 WEST HURON STREET, SUITE 510
CHICAGO, ILLINOIS 60654

CDOT
CHICAGO DEPARTMENT OF TRANSPORTATION
DIVISION OF ENGINEERING

STATE / LAKE LOOP ELEVATED STATION
200 NORTH STATE STREET, CHICAGO, IL 60601

SPEC. NO.

FARE ARRAY CANOPY SECTIONS

DRAWING NO. A-444

CDOT PROJECT D-1-209 | DATE: 9/9/2022 | REVISION NO.

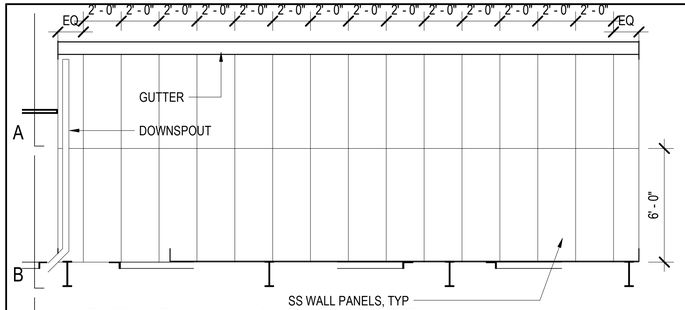

4 ELEVATION - COM ROOM NORTH
1/4" = 1'-0"

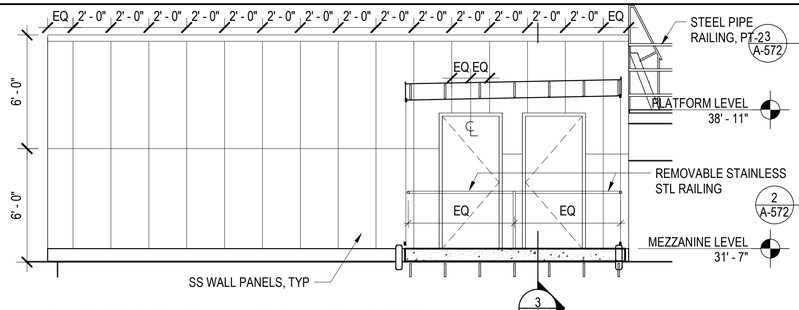

3 ELEVATION - COM ROOM SOUTH
1/4" = 1'-0"

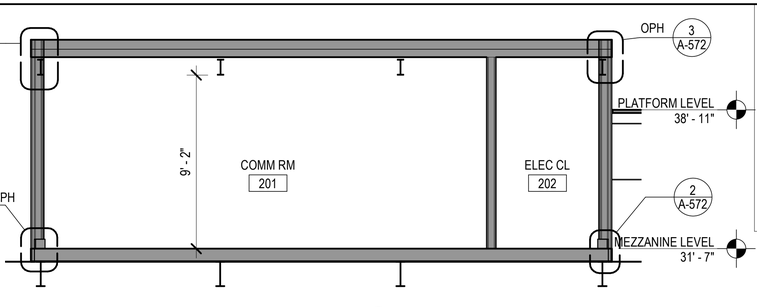

2 SECTION - COM ROOM E/W
1/4" = 1'-0"

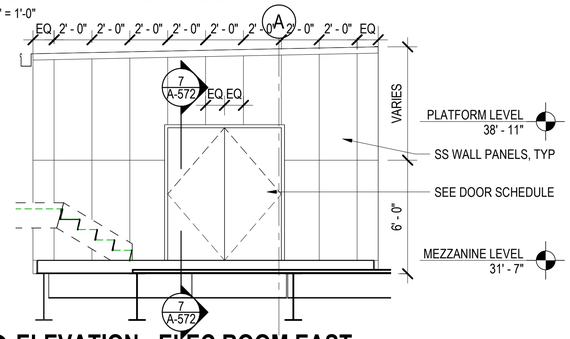

12 ELEVATION - ELEC ROOM EAST
1/4" = 1'-0"

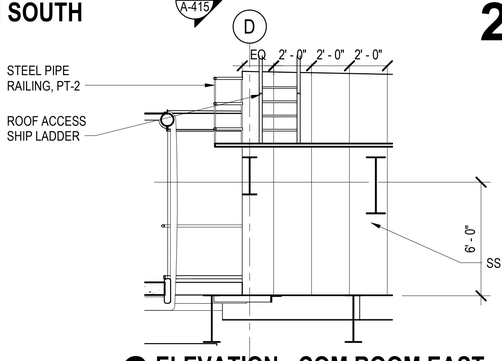

6 ELEVATION - COM ROOM EAST
1/4" = 1'-0"

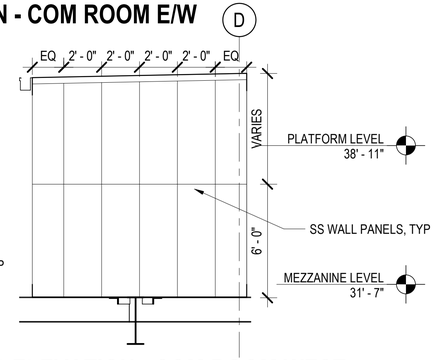

5 ELEVATION - COM ROOM WEST
1/4" = 1'-0"

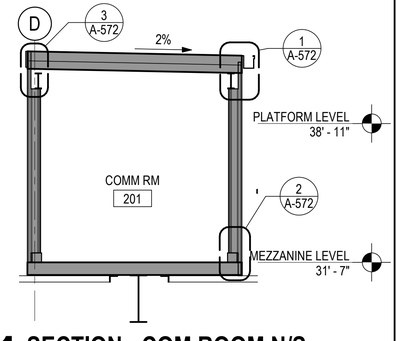

1 SECTION - COM ROOM N/S
1/4" = 1'-0"

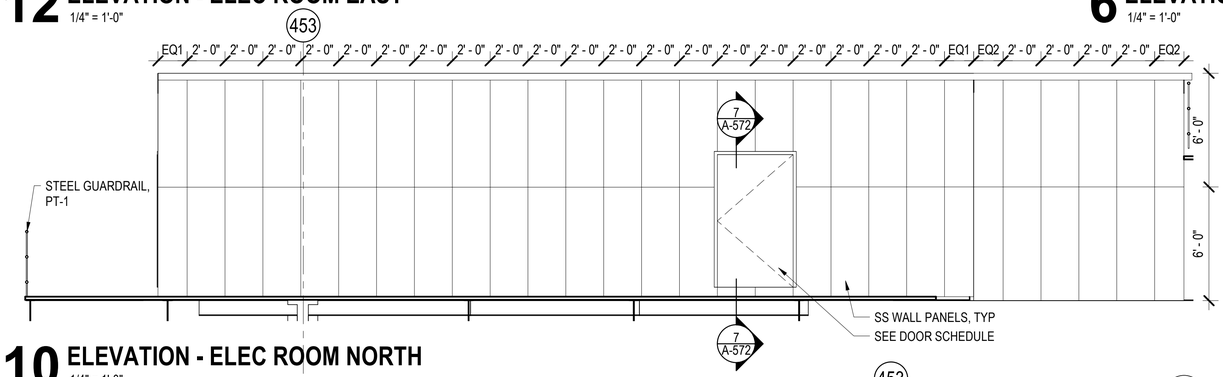

10 ELEVATION - ELEC ROOM NORTH
1/4" = 1'-0"

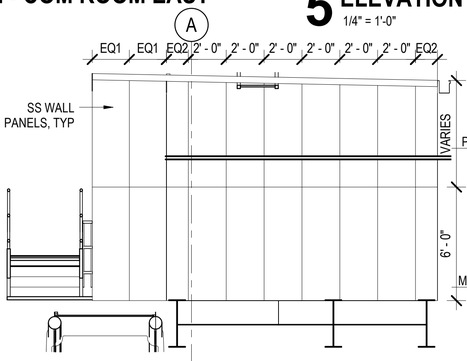

11 ELEVATION - ELEC ROOM WEST
1/4" = 1'-0"

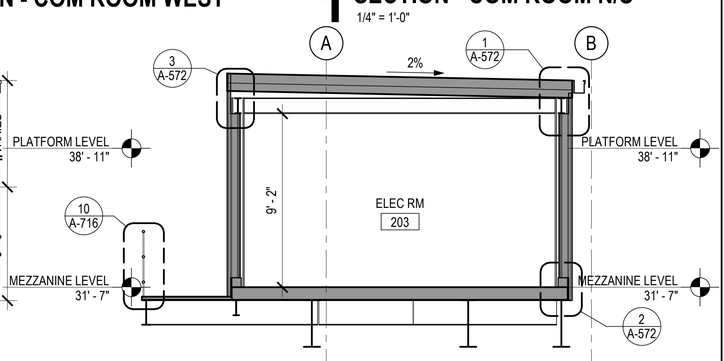

7 SECTION - ELEC ROOM N/S
1/4" = 1'-0"

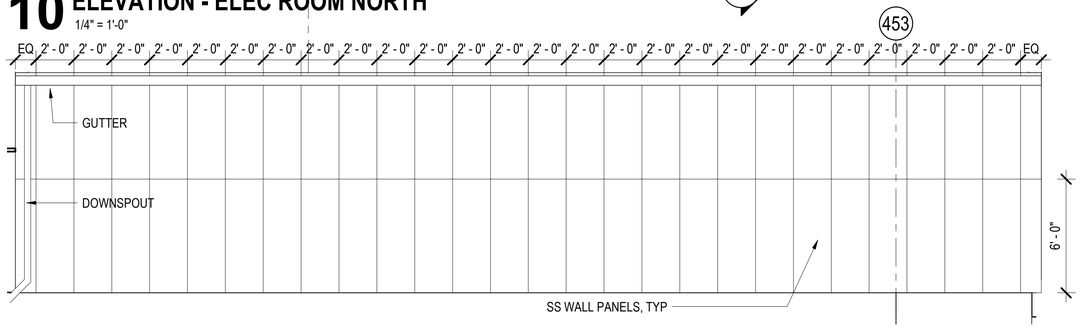

9 ELEVATION - ELEC ROOM SOUTH
1/4" = 1'-0"

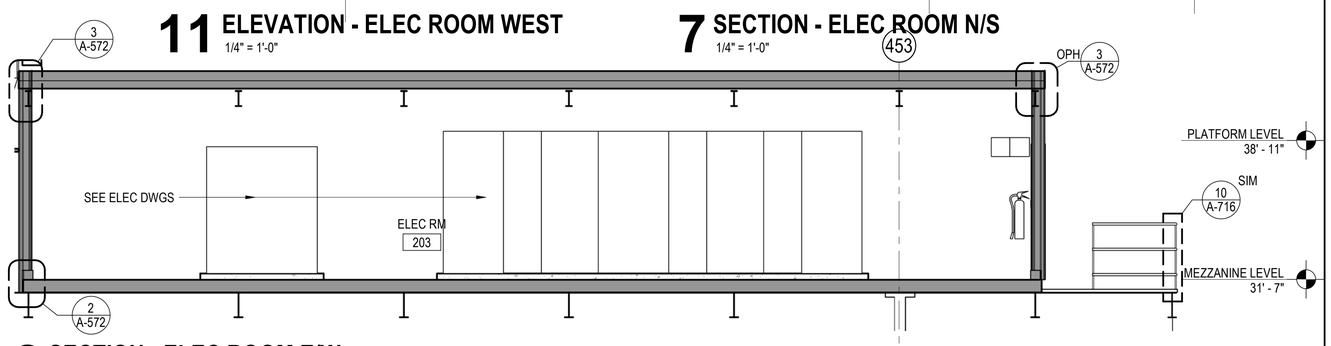

8 SECTION - ELEC ROOM E/W
1/4" = 1'-0"

DESIGN BY:										
DRAWN BY:		4	7/3/2023	ISSUED FOR BID						
CHECKED BY:										
APPROVED BY:		0	9/9/2022	ISSUED FOR PERMIT	MN	KH	SD			
CDOT/APPROVED BY:		NO.	DATE	REVISIONS	DES.	DRW.	CHK.	DCCO	CDOT	

TRANSYSTEMS
222 SOUTH RIVERSIDE PLAZA SUITE 610
CHICAGO, ILLINOIS 60606

SKIDMORE, OWINGS & MERRILL LLP
224 SOUTH MICHIGAN AVENUE, SUITE 1000
CHICAGO, ILLINOIS 60604

CHICAGO DEPARTMENT OF TRANSPORTATION
DIVISION OF ENGINEERING

STATE / LAKE LOOP ELEVATED STATION
200 NORTH STATE STREET, CHICAGO, IL 60601

ENLARGED ELEC AND COM ROOM ELEVATIONS & SECTIONS

CDOT PROJECT D-1-209

DATE: 9/9/2022

SPEC. NO.

DRAWING NO.
A-451

REVISION NO.

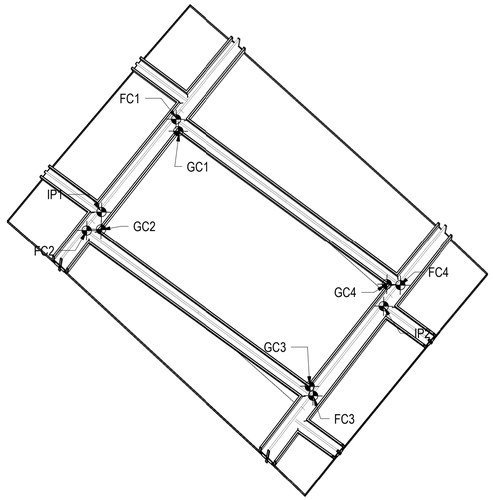

3 ISOMETRIC - DOME GLAZING UNIT WORKPOINT

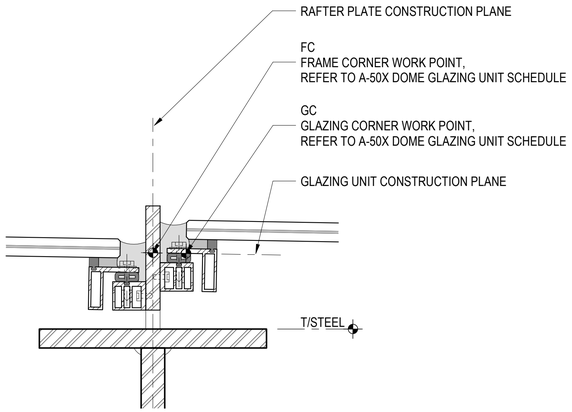

2 SECTION DETAIL - DOME GLAZING UNIT WORKPOINT

6" = 1'-0"

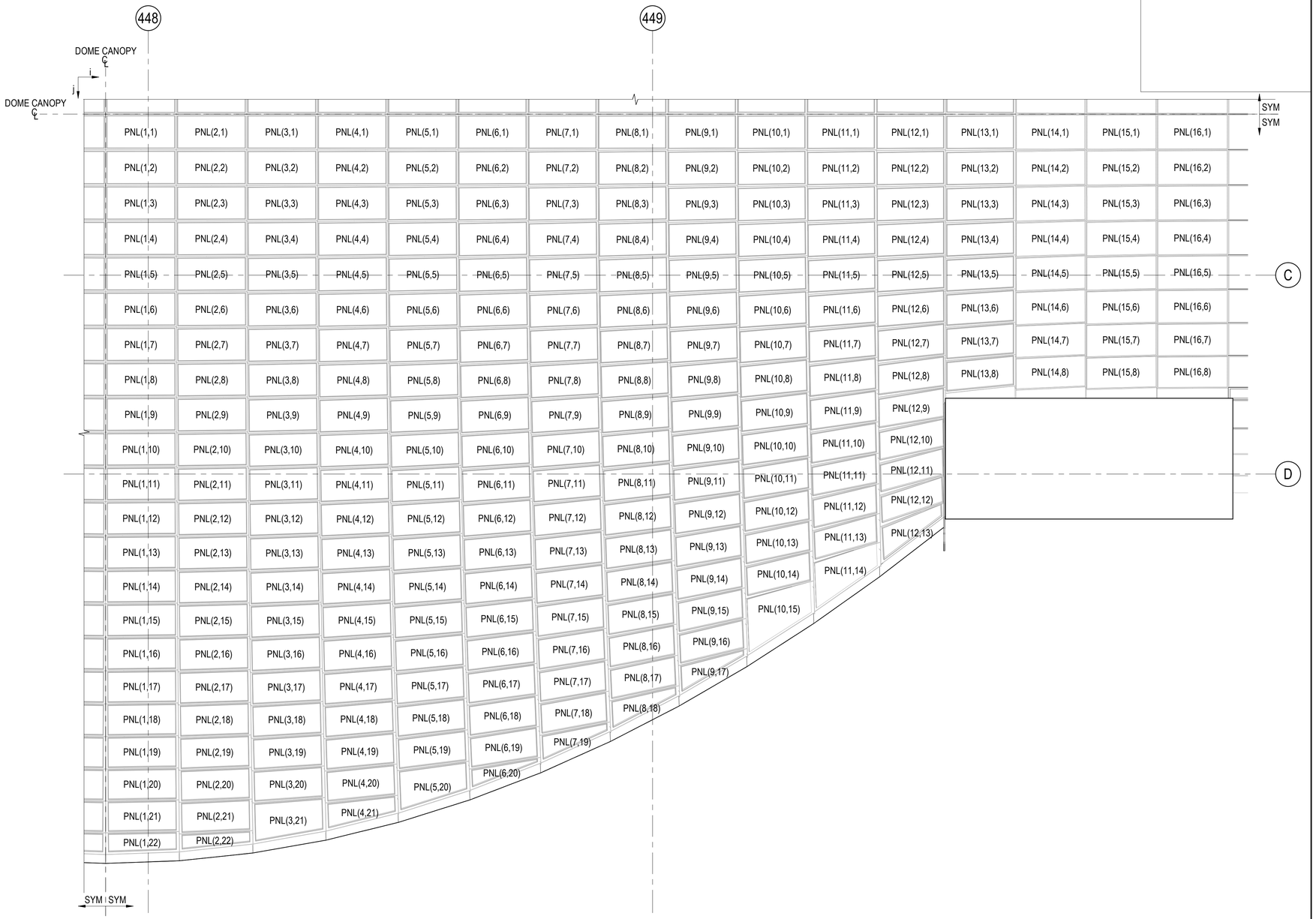

1 KEY PLAN - DOME GLAZING UNIT

1/4" = 1'-0"

DESIGN BY:										
DRAWN BY:		4	7/3/2023	ISSUED FOR BID						
CHECKED BY:										
APPROVED BY:		0	9/9/2022	ISSUED FOR PERMIT	MN	ZT	SD			
CDOT/APPROVED BY:		NO.	DATE	REVISIONS	DES.	DRW.	CHK.	DCCO	CDOT	

TRANSYSTEMS
222 SOUTH RIVERSIDE PLAZA SUITE 610
CHICAGO, ILLINOIS 60606

SKIDMORE, OWINGS & MERRILL LLP
224 SOUTH MICHIGAN AVENUE, SUITE 1000
CHICAGO, ILLINOIS 60604

CHICAGO DEPARTMENT OF TRANSPORTATION
DIVISION OF ENGINEERING

STATE / LAKE LOOP ELEVATED STATION
200 NORTH STATE STREET, CHICAGO, IL 60601

SPEC. NO.

DOME ENCLOSURE GEOMETRY - GLAZING UNIT

DRAWING NO. A-501

CDOT PROJECT D-1-209

DATE: 9/9/2022

REVISION NO.

NOTE:

GC GLAZING CORNER

FC FRAME CORNER

IP INTERMEDIATE POINT

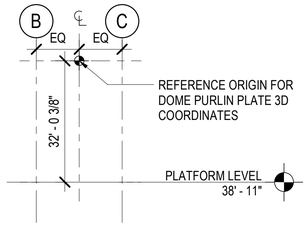

DOME GLAZING UNIT SCHEDULE

PANEL NAME	GC1 (ft)	GC2 (ft)	GC3 (ft)	GC4 (ft)	FC1 (ft)	FC2 (ft)	FC3 (ft)	FC4 (ft)	IP1 (ft)	IP2 (ft)	IP3 (ft)	MULLION TYPE
PNL(1,1)	(0.044302, -0.0642, -0.001461)	(0.044767, -2.439044, -0.028685)	(4.919344, -2.437355, -0.092814)	(4.91888, -0.062511, -0.06559)	(0, 0, -0.000143)	(-3.6345e-10, -2.503276, -0.028832)	(4.964148, -2.499837, -0.094119)	(4.963646, 0, -0.065463)	(-3.6308e-10, -2.502416, -0.028822)	N/A	N/A	C
PNL(1,2)	(0.044084, -2.567409, -0.031766)	(0.045473, -4.940993, -0.113741)	(4.920049, -4.935928, -0.177829)	(4.91866, -2.562344, -0.095854)	(-3.6345e-10, -2.503272, -0.028971)	(-1.4526e-9, -5.005224, -0.11536)	(4.965613, -4.998345, -0.180584)	(4.964141, -2.499833, -0.094295)	(-1.4507e-9, -5.002643, -0.11527)	(4.964137, -2.506008, -0.094508)	N/A	C
PNL(1,3)	(0.044354, -5.069258, -0.119742)	(0.046666, -7.440321, -0.256413)	(4.921239, -7.431877, -0.320429)	(4.918926, -5.060814, -0.183757)	(-1.4526e-9, -5.00522, -0.115464)	(-3.2669e-9, -7.50452, -0.259496)	(4.968051, -7.494194, -0.324639)	(4.965606, -4.998336, -0.180774)	(-3.2626e-9, -7.500217, -0.259248)	(4.965602, -5.008627, -0.181367)	N/A	B
PNL(1,4)	(0.045111, -7.568421, -0.265337)	(0.048346, -9.935703, -0.456626)	(4.922913, -9.923876, -0.520543)	(4.919678, -7.556595, -0.329253)	(-3.2669e-9, -7.504515, -0.259573)	(-5.8054e-9, -9.999839, -0.461164)	(4.971459, -9.986058, -0.526212)	(4.968042, -7.49418, -0.324855)	(-5.7976e-9, -9.993817, -0.460677)	(4.968043, -7.508585, -0.326018)	N/A	B
PNL(1,5)	(0.046356, -10.063574, -0.468456)	(0.050511, -12.425815, -0.714273)	(4.92507, -12.410599, -0.778083)	(4.920914, -10.048358, -0.532266)	(-5.8054e-9, -9.999836, -0.461203)	(-9.0668e-9, -12.48986, -0.720259)	(4.975836, -12.472608, -0.785215)	(4.971449, -9.986035, -0.52646)	(-9.0544e-9, -12.482123, -0.719454)	(4.971458, -10.004555, -0.528387)	N/A	B
PNL(1,6)	(0.048089, -12.553413, -0.728846)	(0.053161, -14.909337, -1.029219)	(4.927708, -14.890703, -1.093059)	(4.922635, -12.534779, -0.792686)	(-9.0667e-9, -12.489879, -0.720095)	(-1.3049e-8, -14.97326, -1.036645)	(4.981173, -14.952497, -1.101662)	(4.975826, -12.472577, -0.78548)	(-1.3031e-8, -14.963815, -1.035441)	(4.975845, -12.495209, -0.788365)	N/A	B
PNL(1,7)	(0.050297, -15.036479, -1.047375)	(0.056294, -17.384952, -1.401298)	(4.930838, -17.363009, -1.464299)	(4.92484, -15.014536, -1.110376)	(-1.3049e-8, -14.973189, -1.037155)	(-1.7751e-8, -17.448728, -1.410141)	(4.987509, -17.424561, -1.474344)	(4.981168, -14.952479, -1.101792)	(-1.7726e-8, -17.437586, -1.408463)	(4.981202, -14.979223, -1.105822)	N/A	A
PNL(1,8)	(0.052983, -17.511498, -1.423315)	(0.05991, -19.851355, -1.830313)	(4.934452, -19.826167, -1.892166)	(4.927526, -17.48631, -1.485168)	(-1.7751e-8, -17.448485, -1.411637)	(-2.3169e-8, -19.914972, -1.840563)	(4.994822, -19.887445, -1.903642)	(4.987474, -17.424419, -1.475219)	(-2.3137e-8, -19.902127, -1.838329)	(4.987526, -17.455298, -1.48059)	N/A	A
PNL(1,9)	(0.056176, -19.977568, -1.854349)	(0.06401, -22.307247, -2.316042)	(4.938522, -22.278449, -2.378653)	(4.930689, -19.94877, -1.91696)	(-2.3169e-8, -19.914865, -1.841138)	(-2.9301e-8, -22.370674, -2.327712)	(5.00303, -22.339387, -2.391631)	(4.994743, -19.887074, -1.905634)	(-2.926e-8, -22.356156, -2.324835)	(4.994816, -19.922129, -1.91258)	N/A	A
PNL(1,10)	(0.059852, -22.433038, -2.342362)	(0.068592, -24.751319, -2.858233)	(4.943072, -24.718838, -2.921613)	(4.934332, -22.400557, -2.405742)	(-2.9301e-8, -22.370693, -2.327625)	(-3.6143e-8, -24.814537, -2.871303)	(5.012208, -24.779396, -2.936087)	(5.002974, -22.339086, -2.393061)	(-3.6093e-8, -24.798336, -2.867699)	(5.003072, -22.378314, -2.40179)	N/A	A
PNL(1,11)	(0.064009, -24.876584, -2.887136)	(0.073655, -27.182281, -3.456605)	(4.948098, -27.14605, -3.520729)	(4.938452, -24.840353, -2.95126)	(-3.6143e-8, -24.814636, -2.87088)	(-4.3692e-8, -27.245271, -3.471054)	(5.022351, -27.206186, -3.536691)	(5.012162, -24.779124, -2.937246)	(-4.3632e-8, -27.227397, -3.466641)	(5.012288, -24.822539, -2.947968)	N/A	A
PNL(1,12)	(0.068641, -27.306866, -3.488493)	(0.079195, -29.59885, -4.110847)	(4.953601, -29.55883, -4.175572)	(4.943047, -27.266846, -3.553218)	(-4.3692e-8, -27.245355, -3.47073)	(-5.1945e-8, -29.661599, -4.126653)	(5.033459, -29.618505, -4.19301)	(5.022303, -27.205874, -3.537895)	(-5.1873e-8, -29.642055, -4.121347)	(5.022462, -27.253494, -3.550825)	N/A	A
PNL(1,13)	(0.073759, -29.722776, -4.145424)	(0.085211, -31.99975, -4.820619)	(4.959567, -31.955703, -4.886485)	(4.948115, -29.67873, -4.211291)	(-5.1945e-8, -29.661746, -4.126138)	(-6.0896e-8, -32.062245, -4.837765)	(5.045496, -32.014865, -4.905414)	(5.033392, -29.618032, -4.194677)	(-6.0811e-8, -32.041034, -4.831477)	(5.033586, -29.669875, -4.21005)	N/A	A
PNL(1,14)	(0.079352, -32.122928, -4.858005)	(0.091698, -34.383713, -5.585552)	(4.965998, -34.335495, -5.65267)	(4.953652, -32.07471, -4.925124)	(-6.0896e-8, -32.062421, -4.837194)	(-7.0541e-8, -34.445943, -5.604018)	(5.058473, -34.394095, -5.673091)	(5.045422, -32.014299, -4.907244)	(-7.0442e-8, -34.423066, -5.596658)	(5.045657, -32.07039, -4.925294)	N/A	A
PNL(1,15)	(0.085422, -34.506105, -5.625683)	(0.098655, -36.749479, -6.405251)	(4.972888, -36.696871, -6.473899)	(4.959654, -34.453498, -5.694331)	(-7.0541e-8, -34.44617, -5.603339)	(-8.0875e-8, -36.811435, -6.425015)	(5.072376, -36.754856, -6.495816)	(5.058387, -34.393386, -5.67521)	(-8.0761e-8, -36.786909, -6.416494)	(5.058666, -34.45375, -5.696184)	N/A	A
PNL(1,16)	(0.091963, -36.871022, -6.448142)	(0.106077, -39.095797, -7.279289)	(4.980234, -39.03859, -7.349645)	(4.966119, -36.813816, -6.518498)	(-8.0875e-8, -36.811708, -6.424259)	(-9.1893e-8, -39.157474, -7.300328)	(5.087201, -39.095906, -7.373064)	(5.07228, -36.754012, -6.498161)	(-9.1763e-8, -39.131295, -7.290551)	(5.072607, -36.818674, -6.522316)	N/A	A
PNL(1,17)	(0.098973, -39.216452, -7.324891)	(0.113961, -41.421425, -8.207214)	(4.98803, -41.359368, -8.279503)	(4.973042, -39.154395, -7.397179)	(-9.1893e-8, -39.157809, -7.299461)	(-1.0359e-7, -41.48282, -8.229503)	(5.102937, -41.415958, -8.304429)	(5.087094, -39.094905, -7.375655)	(-1.0344e-7, -41.454986, -8.218369)	(5.087474, -39.163895, -7.403259)	N/A	A
PNL(1,18)	(0.106449, -41.541121, -8.255556)	(0.122304, -43.725132, -9.188545)	(4.996275, -43.65799, -9.26289)	(4.98042, -41.473979, -8.329901)	(-1.0359e-7, -41.483204, -8.228574)	(-1.1596e-7, -43.786245, -9.212058)	(5.119578, -43.713795, -9.289327)	(5.10282, -41.414805, -8.307218)	(-1.1579e-7, -43.756754, -9.199464)	(5.103258, -41.488153, -8.33855)	N/A	A
PNL(1,19)	(0.114388, -43.843832, -9.239572)	(0.131101, -46.005698, -10.222773)	(5.00496, -45.933187, -10.299361)	(4.988247, -43.771322, -9.31616)	(-1.1596e-7, -43.7867, -9.211027)	(-1.2899e-7, -46.066531, -10.247482)	(5.137114, -45.988144, -10.327316)	(5.119451, -43.712463, -9.292351)	(-1.288e-7, -46.035381, -10.233321)	(5.11995, -43.790197, -9.327701)	N/A	A
PNL(1,20)	(0.122784, -46.123328, -10.276513)	(0.140348, -48.261912, -11.309361)	(5.014083, -48.183774, -11.388272)	(4.996519, -46.04519, -10.355424)	(-1.2899e-7, -46.067038, -10.2464)	(-1.4268e-7, -48.322473, -11.335239)	(5.155537, -48.23782, -11.417748)	(5.136977, -45.986643, -10.330521)	(-1.4247e-7, -48.28966, -11.319399)	(5.137543, -46.068791, -10.370192)	N/A	A
PNL(1,21)	(0.131637, -48.378541, -11.365558)	(0.150043, -50.492686, -12.447536)	(5.023634, -50.408511, -12.529105)	(5.005228, -48.294366, -11.447127)	(-1.4268e-7, -48.323159, -11.333861)	(-1.5702e-7, -50.55263, -12.474364)	(5.174834, -50.461568, -12.560112)	(5.155388, -48.236119, -11.42117)	(-1.5679e-7, -50.51852, -12.456914)	(5.156028, -48.322706, -11.465481)	N/A	A
PNL(1,22)	(0.144099, -50.607537, -12.505828)	(0.156155, -51.930846, -13.216211)	(5.028833, -51.757866, -13.256348)	(5.017534, -50.517646, -12.590569)	(-1.5702e-7, -50.553419, -12.472858)	(-1.674e-7, -52.083305, -13.293756)	(5.18809, -51.899128, -13.336491)	(5.174674, -50.459665, -12.563745)	(5.175402, -50.550496, -12.612503)	N/A	N/A	A
PNL(2,1)	(5.007951, -0.066576, -0.067881)	(5.008867, -2.441416, -0.095421)	(9.880291, -2.437373, -0.282056)	(9.879375, -0.062533, -0.254516)	(4.963648, 0, -0.065412)	(4.964142, -2.508069, -0.094479)	(9.925101, -2.499833, -0.284497)	(9.924105, 0, -0.255506)	N/A	(4.964139, -2.50601, -0.094455)	N/A	C
PNL(2,2)	(5.008261, -2.574544, -0.098309)	(5.011003, -4.948101, -0.181042)	(9.882407, -4.935962, -0.367851)	(9.879665, -2.562405, -0.285118)	(4.964149, -2.508073, -0.0943)	(4.965612, -5.014803, -0.18162)	(9.928005, -4.998314, -0.371774)	(9.925086, -2.499829, -0.284685)	(4.965601, -5.008624, -0.181404)	(9.925073, -2.509486, -0.285021)	N/A	C
PNL(2,3)	(5.010027, -5.081154, -0.186825)	(5.014596, -7.452146, -0.324668)	(9.885958, -7.431876, -0.511875)	(9.881389, -5.060884, -0.374031)	(4.965627, -5.01482, -0.181256)	(4.968062, -7.518872, -0.326743)	(9.932823, -7.494082, -0.517299)	(9.927973, -4.998294, -0.372199)	(4.968038, -7.508569, -0.326144)	(9.927963, -5.014398, -0.373133)	N/A	B
PNL(2,4)	(5.013252, -7.585074, -0.33335)	(5.019644, -9.95222, -0.526224)	(9.89094, -9.923758, -0.714082)	(9.884547, -7.556611, -0.521207)	(4.968083, -7.51891, -0.326203)	(4.971488, -10.018948, -0.529774)	(9.939552, -9.985777, -0.721026)	(9.93277, -7.494034, -0.517998)	(4.97145, -10.004519, -0.528599)	(9.932775, -7.516599, -0.519834)	N/A	B
PNL(2,5)	(5.017932, -10.084972, -0.537789)	(5.026146, -12.446994, -0.785607)	(9.897351, -12.410249, -0.974384)	(9.889137, -10.048228, -0.726565)	(4.971517, -10.019016, -0.529042)	(4.97589, -12.513704, -0.79061)	(9.948184, -12.472037, -0.982868)	(9.939478, -9.985686, -0.722003)	(4.975833, -12.495145, -0.788663)	(9.939506, -10.014732, -0.725047)	N/A	A
PNL(2,6)	(5.024074, -12.579541, -0.799888)	(5.034097, -14.935139, -1.102683)	(9.905179, -14.889976, -1.292788)	(9.895156, -12.534378, -0.989992)	(4.975933, -12.513831, -0.789517)	(4.981265, -15.001818, -1.109118)	(9.958704, -14.951485, -1.302836)	(9.94809, -12.471893, -0.9841)	(4.981187, -14.979125, -1.106202)	(9.948154, -12.507443, -0.988666)	N/A	A
PNL(2,7)	(5.031692, -15.067535, -1.119056)	(5.043494, -17.415332, -1.477291)	(9.914402, -17.361507, -1.66958)	(9.9026, -15.013709, -1.311345)	(4.981347, -15.002113, -1.107015)	(4.98761, -17.481983, -1.485147)	(9.97107, -17.422679, -1.681234)	(9.958605, -14.951302, -1.30414)	(4.987507, -17.455155, -1.481055)	(9.958712, -14.993382, -1.310557)	N/A	A
PNL(2,8)	(5.040739, -17.547549, -1.496063)	(5.05434, -19.886275, -1.909345)	(9.92506, -19.823598, -2.103732)	(9.911459, -17.484872, -1.69045)	(4.98772, -17.482445, -1.482338)	(4.994924, -19.952906, -1.918597)	(9.985371, -19.88438, -2.117002)	(9.971015, -17.422559, -1.681966)	(4.994794, -19.921926, -1.913124)	(9.971177, -17.471237, -1.690563)	N/A	A
PNL(2,9)	(5.051132, -20.017914, -1.932665)	(5.066652, -22.346658, -2.398855)	(9.937238, -22.27522, -2.593565)	(9.921719, -19.946475, -2.127376)	(4.994975, -19.953148, -1.917309)	(5.003209, -22.413238, -2.409443)	(10.001778, -22.335588, -2.608402)	(9.98532, -19.884255, -2.117666)	(5.003046, -22.378116, -2.402415)	(9.985552, -19.939679, -2.128755)	N/A	A
PNL(2,10)	(5.063082, -22.477988, -2.424609)	(5.080425, -24.795079, -2.945583)	(9.950735, -24.714134, -3.143456)	(9.933392, -22.397043, -2.622482)	(5.003285, -22.413648, -2.407511)	(5.012457, -24.861607, -2.957504)	(10.01992, -24.773998, -3.159965)	(10.001537, -22.334919, -2.611558)	(5.01226, -24.822295, -2.948669)	(10.001849, -22.39713, -2.625538)	N/A	A
PNL(2,11)	(5.076501, -24.926111, -2.973639)	(5.095654, -27.230223, -3.549249)	(9.965624, -27.139309, -3.751125)	(9.946471, -24.835197, -3.175515)	(5.012566, -24.862257, -2.954763)	(5.022666, -27.296706, -3.562467)	(10.039943, -27.198597, -3.769341)	(10.019656, -24.77318, -3.163421)	(5.02243, -27.253198, -3.551603)	(10.020059, -24.842217, -3.18066)	N/A	A
PNL(2,12)	(5.091351, -27.360784, -3.580213)	(5.112332, -29.650789, -4.209547)	(9.981928, -29.545976, -4.415495)	(9.960947, -27.25957, -3.786161)	(5.022782, -27.29747, -3.559551)	(5.033383, -29.717244, -4.224013)	(10.061894, -29.608226, -4.435425)	(10.039665, -27.197652, -3.77295)	(5.033551, -29.669523, -4.210906)	(10.040174, -27.273575, -3.793806)	N/A	A
PNL(2,13)	(5.107669, -29.78094, -4.243079)	(5.130452, -32.055479, -4.926143)	(9.999593, -31.943343, -5.137136)	(9.976809, -29.668804, -4.454071)	(5.033967, -29.718231, -4.220576)	(5.045943, -32.121925, -4.941819)	(10.085684, -32.001271, -5.158828)	(10.061556, -29.606973, -4.439791)	(5.045617, -32.069975, -4.926228)	(10.062181, -29.689836, -4.464665)	N/A	A
PNL(2,14)	(5.125425, -32.185147, -4.962397)	(5.150008, -34.443003, -5.698675)	(10.018631, -34.319405, -5.915144)	(9.994047, -32.061548, -5.178867)	(5.046096, -32.123112, -4.938021)	(5.058999, -34.509466, -5.715511)	(10.11134, -34.376529, -5.938628)	(10.085314, -31.999788, -5.163575)	(5.058622, -34.453267, -5.697197)	(10.086071, -32.08965, -5.192867)	N/A	A
PNL(2,15)	(5.144622, -34.572174, -5.737602)	(5.170991, -36.812079, -6.52675)	(10.039018, -36.676369, -6.749285)	(10.012649, -34.436463, -5.960137)	(5.059169, -34.510889, -5.711307)	(5.072991, -36.87859, -6.544699)	(10.138832, -36.732598, -6.7746)	(10.110928, -34.374749, -5.943891)	(5.07256, -36.818155, -6.523422)	(10.111829, -34.471669, -5.978024)	N/A	A
PNL(2,16)	(5.165248, -36.940707, -6.568394)	(5.193393, -39.161431, -7.40995)	(10.060745, -39.012944, -7.638996)	(10.0326, -36.79222, -6.797439)	(5.073178, -36.880256, -6.540135)	(5.087913, -39.22803, -7.428958)	(10.168151, -39.068182, -7.666181)	(10.138381, -36.730519, -6.780302)	(5.087422, -39.163329, -7.404459)	(10.139441, -36.834548, -6.819709)	N/A	A
PNL(2,17)	(5.187299, -39.289496, -7.454279)	(5.217206, -41.489792, -8.347828)	(10.083793, -41.327796, -8.583847)	(10.053887, -39.127501, -7.690298)	(5.088117, -39.22997, -7.424007)	(5.103756, -41.556526, -8.36784)	(10.199276, -41.381936, -8.612946)	(10.16766, -39.065773, -7.672335)	(5.103202, -41.487532, -8.339845)	(10.168894, -39.176965, -7.717473)	N/A	A
PNL(2,18)	(5.210761, -41.617242, -8.394894)	(5.242419, -43.795905, -9.339908)	(10.108152, -43.619662, -9.583222)	(10.076494, -41.440999, -8.638208)	(5.103977, -41.55874, -8.362561)	(5.120513, -43.862829, -9.360866)	(10.232195, -43.672591, -9.614277)	(10.198748, -41.379196, -8.619489)	(5.11989, -43.789513, -9.329094)	(10.200171, -41.497605, -8.670831)	N/A	A
PNL(2,19)	(5.23563, -43.922715, -9.38969)	(5.269022, -46.07852, -10.385688)	(10.1338, -45.887229, -10.636631)	(10.100407, -43.731424, -9.640633)	(5.120751, -43.865346, -9.355239)	(5.138175, -46.145699, -10.407531)	(10.266885, -45.938824, -10.66969)	(10.231627, -43.669486, -9.621231)	(5.137478, -46.068036, -10.371686)	(10.233255, -43.795158, -9.67927)	N/A	A
PNL(2,20)	(5.261891, -46.204635, -10.438228)	(5.297005, -48.3364, -11.484636)	(10.160723, -48.12926, -11.743414)	(10.125608, -45.997495, -10.697006)	(5.13843, -46.148517, -10.401607)	(5.156733, -48.40391, -11.507303)	(10.30333, -48.17939, -11.778521)	(10.266279, -45.935353, -10.676996)	(5.155957, -48.321872, -11.467076)	(10.268129, -46.068331, -10.742245)	N/A	A
PNL(2,21)	(5.289549, -48.462096, -11.53934)	(5.326377, -50.568669, -12.635523)	(10.188876, -50.344533, -12.902892)	(10.152049, -48.23796, -11.806708)	(5.157031, -48.407357, -11.500475)	(5.17619, -50.63503, -12.658113)	(10.341481, -50.393025, -12.9401)	(10.302684, -48.175524, -11.786191)	(5.175344, -50.549799, -12.613812)	(10.304775, -48.315841, -11.859179)	N/A	A
PNL(2,22)	(5.322929, -50.689126, -12.693881)	(5.34188, -51.734751, -13.262435)	(10.198207, -51.216815, -13.385472)	(10.184333, -50.451299, -12.969227)	(5.176388, -50.637402, -12.653647)	(5.188011, -51.898161, -13.338245)	(10.358366, -51.346733, -13.469239)	(10.340782, -50.388683, -12.948285)	(10.343158, -50.534554, -13.02758)	N/A	N/A	A
PNL(3,1)	(9.968395, -0.068877, -0.258765)	(9.969747, -2.44371, -0.286911)	(14.835521, -2.437386, -0.586632)	(14.834168, -0.062554, -0.558486)	(9.924127, 0, -0.255224)	(9.925089, -2.512711, -0.284975)	(14.880336, -2.499828, -0.590131)	(14.878845, 0, -0.560499)	(9.92508, -2.509489, -0.284936)	N/A	N/A	C
PNL(3,2)	(9.969232, -2.581461, -0.28947)	(9.97329, -4.954957, -0.373881)	(14.838988, -4.935953, -0.674293)	(14.834929, -2.562457, -0.589883)	(9.92514, -2.512727, -0.284304)	(9.927995, -5.024062, -0.373528)	(14.884654, -4.998245, -0.679328)	(14.880297, -2.49982, -0.590469)	(9.92796, -5.014394, -0.373183)	(14.88027, -2.512957, -0.590933)	N/A	B
PNL(3,3)	(9.972481, -5.092684, -0.379164)	(9.979245, -7.463508, -0.51978)	(14.844779, -7.431719, -0.821751)	(14.838016, -5.060895, -0.681135)	(9.928085, -5.024118, -0.372337)	(9.932832, -7.532703, -0.520973)	(14.891777, -7.493818, -0.828358)	(14.884539, -4.998198, -0.680333)	(9.932761, -7.516576, -0.520015)	(14.884519, -5.020122, -0.681628)	N/A	B
PNL(3,4)	(9.978144, -7.601192, -0.527796)	(9.98761, -9.96801, -0.724538)	(14.852891, -9.92325, -1.028929)	(14.843426, -7.556432, -0.832187)	(9.932961, -7.532824, -0.519269)	(9.939599, -10.037283, -0.727238)	(14.9017, -9.985109, -1.037146)	(14.891585, -7.493699, -0.830038)	(9.939483, -10.014679, -0.725357)	(14.891593, -7.52445, -0.832587)	N/A	B
PNL(3,5)	(9.986218, -10.105629, -0.735279)	(9.998382, -12.467108, -0.988051)	(14.863317, -12.409117, -1.295724)	(14.851154, -10.047638, -1.042953)	(9.939768, -10.037494, -0.725012)	(9.948292, -12.536455, -0.992219)	(14.914416, -12.470682, -1.30559)	(14.901431, -9.984886, -1.0395)	(9.94812, -12.507349, -0.989102)	(14.901488, -10.024522, -1.043733)	N/A	B
PNL(3,6)	(9.996712, -12.604663, -1.001359)	(10.011557, -14.959452, -1.31019)	(14.87604, -14.887872, -1.622138)	(14.861195, -12.533084, -1.313307)	(9.948513, -12.536801, -0.989304)	(9.958906, -15.028874, -1.315789)	(14.929899, -14.949086, -1.633698)	(14.914072, -12.470327, -1.308535)	(9.958669, -14.993237, -1.311114)	(14.914199, -12.518919, -1.314956)	N/A	A
PNL(3,7)	(10.009649, -15.097014, -1.325523)	(10.027132, -17.44369, -1.690805)	(14.891023, -17.358021, -2.008374)	(14.87354, -15.011345, -1.643091)	(9.959222, -15.02947, -1.311613)	(9.971436, -17.51323, -1.697806)	(14.948093, -17.418813, -2.021688)	(14.929502, -14.948592, -1.637162)	(9.971124, -17.471029, -1.691237)	(14.929718, -15.006224, -1.646118)	N/A	A
PNL(3,8)	(10.024996, -17.581375, -1.708042)	(10.045113, -19.918503, -2.130003)	(14.908294, -19.81813, -2.454083)	(14.888176, -17.481001, -2.032122)	(9.971861, -17.514167, -1.692211)	(9.985888, -19.988214, -2.138381)	(14.969062, -19.878419, -2.469207)	(14.947711, -17.418256, -2.02502)	(9.985488, -19.939377, -2.129565)	(14.948038, -17.485046, -2.037061)	N/A	A
PNL(3,9)	(10.042552, -20.055895, -2.151845)	(10.065533, -22.382521, -2.628193)	(14.928073, -22.2672, -2.956871)	(14.905092, -19.940574, -2.480523)	(9.98621, -19.989031, -2.134123)	(10.002275, -22.452345, -2.637857)	(14.993169, -22.326946, -2.973775)	(14.968703, -19.877821, -2.472328)	(10.001774, -22.396827, -2.626493)	(14.969173, -19.953962, -2.487896)	N/A	A
PNL(3,10)	(10.062665, -22.519724, -2.652946)	(10.088383, -24.834187, -3.185135)	(14.950029, -24.702937, -3.520994)	(14.92431, -22.388474, -2.988805)	(10.002628, -22.453349, -2.63322)	(10.020586, -24.904147, -3.19606)	(15.019873, -24.762034, -3.539791)	(14.992504, -22.325697, -2.979556)	(10.019973, -24.841841, -3.181739)	(14.993139, -22.411283, -2.999211)	N/A	A
PNL(3,11)	(10.085271, -24.971364, -3.212044)	(10.113657, -27.272121, -3.800546)	(14.974203, -27.123997, -4.145195)	(14.945817, -24.823239, -3.556692)	(10.021033, -24.905559, -3.190222)	(10.040812, -27.342245, -3.812684)	(15.049264, -27.182336, -4.165966)	(15.019103, -24.760425, -3.546452)	(10.040077, -27.273117, -3.795011)	(15.019925, -24.855558, -3.570758)	N/A	A
PNL(3,12)	(10.110237, -27.40904, -3.830493)	(10.141346, -29.694956, -4.474114)	(15.000703, -29.529336, -4.827461)	(14.969594, -27.243421, -4.183839)	(10.041284, -27.343888, -3.806548)	(10.062944, -29.765291, -4.487389)	(15.08152, -29.586831, -4.850233)	(15.048482, -27.180538, -4.172695)	(10.062073, -29.689285, -4.466002)	(15.049522, -27.285336, -4.20217)	N/A	A
PNL(3,13)	(10.137656, -29.831711, -4.5067)	(10.171441, -32.10133, -5.205497)	(15.029407, -31.917199, -5.568662)	(14.995621, -29.647581, -4.869865)	(10.063473, -29.767301, -4.480544)	(10.08697, -32.171926, -5.219846)	(15.116469, -31.973728, -5.593515)	(15.080625, -29.584586, -4.857893)	(10.085951, -32.088998, -5.194331)	(15.081908, -29.699151, -4.89313)	N/A	A
PNL(3,14)	(10.167469, -32.237853, -5.240906)	(10.20393, -34.489888, -5.994322)	(15.06034, -34.286324, -6.367771)	(15.023879, -32.034289, -5.614355)	(10.087544, -32.174286, -5.212471)	(10.112877, -34.560808, -6.009671)	(15.15416, -34.341769, -6.394763)	(15.115512, -31.971132, -5.601645)	(10.111696, -34.470907, -5.979619)	(15.117067, -32.095569, -5.643233)	N/A	A
PNL(3,15)	(10.199685, -34.626171, -6.032526)	(10.238802, -36.859281, -6.840188)	(15.093462, -36.63524, -7.224519)	(15.054345, -34.40213, -6.416858)	(10.1135, -34.563561, -6.001732)	(10.140653, -36.930597, -6.856461)	(15.194543, -36.689466, -7.253723)	(15.153123, -34.338746, -6.403501)	(10.139297, -36.833725, -6.821457)	(15.154979, -34.47315, -6.452064)	N/A	A
PNL(3,16)	(10.234285, -36.995284, -6.881251)	(10.276044, -39.208167, -7.742663)	(15.128753, -38.962582, -8.1383)	(15.086994, -36.749699, -7.276888)	(10.141321, -36.933755, -6.848016)	(10.170283, -39.279965, -7.759779)	(15.237608, -39.015445, -8.169785)	(15.193435, -36.68601, -7.262982)	(10.168737, -39.176066, -7.719376)	(15.195623, -36.830455, -7.319156)	N/A	A
PNL(3,17)	(10.271263, -39.343874, -7.786578)	(10.315643, -41.535213, -8.701285)	(15.166181, -41.266943, -9.108633)	(15.121801, -39.075604, -8.193926)	(10.171, -39.283566, -7.750813)	(10.201752, -41.607589, -8.719159)	(15.28332, -41.318282, -9.142479)	(15.236425, -39.01152, -8.179574)	(10.2, -41.496615, -8.67289)	(15.238976, -39.166082, -8.244029)	N/A	A
PNL(3,18)	(10.310598, -41.670579, -8.748111)	(10.357582, -43.839093, -9.715563)	(15.205724, -43.546981, -10.134871)	(15.158739, -41.378467, -9.167419)	(10.202516, -41.611645, -8.709726)	(10.235043, -43.912158, -9.734107)	(15.331659, -43.596624, -10.171155)	(15.282066, -41.313884, -9.152728)	(10.23307, -43.794066, -9.681488)	(15.285013, -41.478631, -9.226157)	N/A	A
PNL(3,19)	(10.35228, -43.974086, -9.765321)	(10.401847, -46.118491, -10.784976)	(15.247348, -45.801332, -11.216435)	(15.19778, -43.656927, -10.19678)	(10.235855, -43.916695, -9.724221)	(10.270139, -46.192371, -10.804098)	(15.382592, -45.84909, -11.255239)	(15.330332, -43.591722, -10.18186)	(10.267929, -46.067124, -10.744626)	(15.333708, -43.766707, -10.264984)	N/A	A
PNL(3,20)	(10.396291, -46.253074, -10.837693)	(10.448419, -48.372099, -11.908972)	(15.291022, -48.028661, -12.352668)	(15.238895, -45.909636, -11.281389)	(10.271, -46.197409, -10.793782)	(10.307027, -48.447293, -11.928758)	(15.436091, -48.074355, -12.394086)	(15.381194, -45.843671, -11.266355)	(10.304558, -48.314505, -11.861728)	(15.385035, -46.02893, -11.359922)	N/A	A
PNL(3,21)	(10.440401, -48.509327, -11.960637)	(10.509374, -51.170355, -13.39856)	(15.335795, -50.316627, -13.598923)	(15.279262, -48.135508, -12.420325)	(10.308319, -48.455207, -11.913559)	(10.358141, -51.345288, -13.47183)	(15.495436, -50.436571, -13.685098)	(15.434628, -48.068418, -12.405512)	(10.342698, -50.531682, -13.032957)	(15.438892, -48.263645, -12.510897)	N/A	A
PNL(4,1)	(14.9231, -0.071177, -0.5645)	(14.924881, -2.445997, -0.593694)	(19.783163, -2.437394, -0.996992)	(19.781381, -0.062574, -0.967797)	(14.878906, 0, -0.55996)	(14.880303, -2.517346, -0.590865)	(19.827996, -2.499817, -1.001478)	(19.825997, 0, -0.970737)	(14.880284, -2.512962, -0.59081)	N/A	N/A	C
PNL(4,2)	(14.924459, -2.588378, -0.595773)	(14.929805, -4.961758, -0.683326)	(19.787897, -4.935881, -1.088171)	(19.782551, -2.562501, -1.000618)	(14.880459, -2.51738, -0.589492)	(14.884584, -5.033274, -0.682174)	(19.833704, -4.998112, -1.094281)	(19.827904, -2.499802, -1.002105)	(14.884513, -5.020117, -0.681685)	(19.827857, -2.51655, -1.002716)	N/A	B
PNL(4,3)	(14.929172, -5.104198, -0.687854)	(14.938082, -7.474698, -0.833711)	(19.79577, -7.431324, -1.241894)	(19.78686, -5.060824, -1.096038)	(14.884858, -5.033392, -0.679772)	(14.89171, -7.546382, -0.834177)	(19.843057, -7.493314, -1.249688)	(19.83343, -4.998022, -1.096132)	(14.891566, -7.524421, -0.83282)	(19.833396, -5.025994, -1.097841)	N/A	B
PNL(4,4)	(14.937238, -7.617222, -0.840707)	(14.949711, -9.983406, -1.044775)	(19.806775, -9.922159, -1.458063)	(19.794302, -7.555975, -1.253995)	(14.892099, -7.546632, -0.830762)	(14.901676, -10.055263, -1.046801)	(19.856049, -9.983848, -1.467601)	(19.842602, -7.493089, -1.252762)	(14.901441, -10.024453, -1.044137)	(19.842615, -7.532366, -1.256132)	N/A	B
PNL(4,5)	(14.948657, -10.126039, -1.054251)	(14.964691, -12.48647, -1.316421)	(19.8209, -12.406819, -1.736555)	(19.804867, -10.046388, -1.474385)	(14.902181, -10.055697, -1.042375)	(14.914477, -12.558516, -1.319945)	(19.87267, -12.468142, -1.747902)	(19.855413, -9.983428, -1.471894)	(14.914133, -12.518796, -1.315527)	(19.855509, -10.034126, -1.477503)	N/A	A

| | | |

NOTE:

GC GLAZING CORNER

FC FRAME CORNER

IP INTERMEDIATE POINT

DOME GLAZING UNIT SCHEDULE

PANEL NAME	GC1 (ft)	GC2 (ft)	GC3 (ft)	GC4 (ft)	FC1 (ft)	FC2 (ft)	FC3 (ft)	FC4 (ft)	IP1 (ft)	IP2 (ft)	IP3 (ft)	MULLION TYPE
PNL(4,6)	(14.963445, -12.629259, -1.328222)	(14.983021, -14.98248, -1.64852)	(19.838118, -14.883723, -2.077362)	(19.818542, -12.530501, -1.757064)	(14.915118, -12.559204, -1.314338)	(14.930108, -15.054739, -1.653481)	(19.892883, -14.944604, -2.090591)	(19.871855, -12.46747, -1.753389)	(14.929633, -15.006035, -1.646845)	(19.872071, -12.529736, -1.761836)	N/A	A
PNL(4,7)	(14.98163, -15.12553, -1.662207)	(15.004698, -17.470026, -2.040931)	(19.85838, -17.351253, -2.480572)	(19.835313, -15.006757, -2.101849)	(14.930938, -15.055812, -1.646219)	(14.948562, -17.54255, -2.047273)	(19.91663, -17.411604, -2.49577)	(19.891921, -14.94365, -2.097063)	(14.947935, -17.484776, -2.037935)	(19.892292, -15.017655, -2.108984)	N/A	A
PNL(4,8)	(15.003183, -17.613434, -2.056565)	(15.029723, -19.947681, -2.493845)	(19.881713, -19.807848, -2.945802)	(19.855173, -17.473602, -2.508522)	(14.94958, -17.544092, -2.038372)	(14.969847, -20.020532, -2.501513)	(19.943948, -19.867566, -2.963054)	(19.915596, -17.410405, -2.502706)	(14.969044, -19.953563, -2.488963)	(19.916158, -17.496277, -2.518752)	N/A	A
PNL(4,9)	(15.027901, -20.091099, -2.513653)	(15.058105, -22.413924, -3.007819)	(19.908343, -22.252282, -3.471165)	(19.878139, -19.929458, -2.976999)	(14.970796, -20.022179, -2.493224)	(14.993994, -22.487091, -3.016711)	(19.975143, -22.311286, -3.490492)	(19.942873, -19.866139, -2.970253)	(14.992987, -22.410874, -3.000495)	(19.943674, -19.963941, -2.991011)	N/A	A
PNL(4,10)	(15.056027, -22.557292, -3.031261)	(15.089834, -24.867162, -3.58261)	(19.938017, -24.682564, -4.058706)	(19.90421, -22.372695, -3.507357)	(14.994938, -22.488931, -3.008501)	(15.020985, -24.940695, -3.592664)	(20.009844, -24.740739, -4.080203)	(19.973757, -22.309213, -3.499762)	(15.01975, -24.855046, -3.572222)	(19.97484, -22.419107, -3.525936)	N/A	A
PNL(4,11)	(15.087664, -25.010812, -3.608232)	(15.124901, -27.305919, -4.217922)	(19.9706, -27.096859, -4.708956)	(19.933364, -24.801752, -4.099265)	(15.022103, -24.943119, -3.582984)	(15.050806, -27.379871, -4.229081)	(20.047879, -27.154053, -4.732755)	(20.008235, -24.738066, -4.090903)	(15.049324, -27.28471, -4.203808)	(20.009632, -24.860238, -4.123292)	N/A	A
PNL(4,12)	(15.122523, -27.449555, -4.246851)	(15.163295, -29.72873, -4.913429)	(20.006345, -29.494256, -5.418914)	(19.965573, -27.215081, -4.752336)	(15.051969, -27.382644, -4.219068)	(15.083444, -29.803176, -4.925587)	(20.089626, -29.55035, -5.445064)	(20.04628, -27.151131, -4.743327)	(15.081685, -29.698395, -4.894956)	(20.048044, -27.285774, -4.782629)	N/A	A
PNL(4,13)	(15.160763, -29.872448, -4.945269)	(15.205004, -32.134133, -5.668768)	(20.045049, -31.872832, -6.189643)	(20.000808, -29.611148, -5.466144)	(15.084703, -29.806446, -4.914828)	(15.118882, -32.209158, -5.681841)	(20.13482, -31.927667, -6.21825)	(20.08787, -29.546853, -5.456595)	(15.116819, -32.094672, -5.64524)	(20.090043, -29.694133, -5.50362)	N/A	A
PNL(4,14)	(15.202307, -32.277868, -5.70369)	(15.250012, -34.520673, -6.483547)	(20.086745, -34.231233, -7.02008)	(20.039039, -31.988428, -6.240223)	(15.12022, -32.212919, -5.670488)	(15.1571, -34.596377, -6.497434)	(20.18352, -34.284643, -7.051234)	(20.132977, -31.923698, -6.230256)	(15.154705, -34.4721, -6.454254)	(20.13561, -32.083769, -6.285814)	N/A	A
PNL(4,15)	(15.247159, -34.664404, -6.521565)	(15.298305, -36.886902, -7.357336)	(20.131379, -36.567909, -7.909842)	(20.080233, -34.345411, -7.074071)	(15.158519, -34.600668, -6.485487)	(15.198078, -36.963401, -7.371935)	(20.23567, -36.61971, -7.943645)	(20.181573, -34.280135, -7.063811)	(15.195323, -36.829319, -7.321559)	(20.184715, -34.453135, -7.128752)	N/A	A
PNL(4,16)	(15.295298, -37.030589, -7.39851)	(15.349863, -39.231378, -8.289677)	(20.178919, -38.881391, -8.858312)	(20.124354, -36.680603, -7.967145)	(15.199578, -36.968244, -7.359437)	(15.241794, -39.308804, -8.304879)	(20.291247, -38.931383, -8.894867)	(20.233627, -36.614652, -7.956725)	(15.238649, -39.16484, -8.246646)	(20.23733, -36.800666, -8.031915)	N/A	A
PNL(4,17)	(15.346706, -39.37498, -8.334059)	(15.404666, -41.552668, -9.280073)	(20.229327, -41.170208, -9.864882)	(20.171366, -38.992521, -8.918868)	(15.243375, -39.314223, -8.291867)	(15.288226, -41.631172, -9.295766)	(20.350214, -41.218171, -9.904296)	(20.289105, -38.925749, -8.908424)	(15.284657, -41.477264, -9.229889)	(20.293423, -39.124872, -8.994773)	N/A	A
PNL(4,18)	(15.401367, -41.696149, -9.327696)	(15.462693, -43.849346, -10.327999)	(20.282557, -43.4329, -10.928925)	(20.221231, -41.279703, -9.928622)	(15.289889, -41.637197, -9.282257)	(15.337348, -43.929097, -10.344067)	(20.412528, -43.478592, -10.971307)	(20.347972, -41.21194, -9.918297)	(15.333324, -43.7652, -10.268032)	(20.352961, -41.424241, -10.016751)	N/A	A
PNL(4,19)	(15.459252, -43.992643, -10.378942)	(15.523919, -46.119996, -11.432892)	(20.338575, -45.668054, -12.049706)	(20.273908, -43.540701, -10.995755)	(15.339091, -43.935736, -10.330127)	(15.389134, -46.201185, -11.449217)	(20.478159, -45.711218, -12.095166)	(20.41019, -43.471757, -10.985693)	(15.384619, -46.027267, -11.363188)	(20.415908, -43.69728, -11.097225)	N/A	A
PNL(4,20)	(15.520349, -46.263083, -11.487154)	(15.588317, -48.363213, -12.594157)	(20.397324, -47.874217, -13.226584)	(20.329356, -45.774086, -12.119581)	(15.390963, -46.208483, -11.434828)	(15.443463, -48.443378, -12.609209)	(20.547027, -47.914551, -13.275224)	(20.47572, -45.703748, -12.109929)	(15.438516, -48.262103, -12.513827)	(20.482224, -45.942501, -12.235553)	N/A	A
PNL(4,21)	(15.586016, -48.500712, -12.649122)	(15.644467, -50.246566, -13.620311)	(20.425452, -49.063814, -13.903368)	(20.389104, -47.978149, -13.299432)	(15.445366, -48.451285, -12.594494)	(15.4944, -50.432236, -13.693088)	(20.587319, -49.172315, -13.994614)	(20.544486, -47.906446, -13.290344)	(20.551793, -48.153823, -13.427766)	N/A	N/A	A
PNL(5,1)	(19.870207, -0.073562, -0.975359)	(19.87241, -2.44836, -1.006236)	(24.721956, -2.437394, -1.503641)	(24.719752, -0.062595, -1.472765)	(19.826123, 0, -0.969887)	(19.827915, -2.522149, -1.002623)	(24.766849, -2.499799, -1.509052)	(24.764312, 0, -1.476528)	(19.827882, -2.516557, -1.002547)	N/A	N/A	C
PNL(5,2)	(19.872087, -2.595557, -1.007721)	(19.878693, -4.96874, -1.100374)	(24.727864, -4.935717, -1.600455)	(24.721258, -2.562534, -1.507802)	(19.828251, -2.522208, -1.000346)	(19.833506, -5.04277, -1.098571)	(24.773942, -4.997886, -1.607628)	(24.76666, -2.499773, -1.510064)	(19.833386, -5.025988, -1.097908)	(24.766583, -2.520378, -1.510854)	N/A	B
PNL(5,3)	(19.878246, -5.116113, -1.103973)	(19.889258, -7.486066, -1.258341)	(24.737638, -7.430597, -1.764071)	(24.726626, -5.060645, -1.609703)	(19.834093, -5.042975, -1.094606)	(19.84281, -7.560358, -1.258264)	(24.785464, -7.492466, -1.773095)	(24.773396, -4.997736, -1.61055)	(19.842571, -7.532328, -1.256427)	(24.773335, -5.032176, -1.61277)	N/A	B
PNL(5,4)	(19.888688, -7.633708, -1.264076)	(19.904107, -9.998816, -1.480064)	(24.751264, -9.920246, -1.994379)	(24.735845, -7.555138, -1.77839)	(19.843645, -7.560795, -1.252623)	(19.855821, -10.073401, -1.481629)	(24.801405, -9.98174, -2.005346)	(24.784561, -7.492094, -1.777918)	(19.855432, -10.034038, -1.47802)	(24.784571, -7.540511, -1.782307)	N/A	B
PNL(5,5)	(19.903415, -10.146816, -1.487974)	(19.923246, -12.505469, -1.765446)	(24.768726, -12.402878, -2.291205)	(24.748895, -10.044226, -2.013733)	(19.856901, -10.074156, -1.474332)	(19.872533, -12.580391, -1.768562)	(24.821754, -12.463913, -2.304213)	(24.800148, -9.981049, -2.012048)	(19.871961, -12.529577, -1.762568)	(24.800284, -10.043642, -2.019368)	N/A	B
PNL(5,6)	(19.922452, -12.653938, -1.775418)	(19.946681, -15.004503, -2.114358)	(24.78998, -14.876695, -2.654491)	(24.765751, -12.52613, -2.315551)	(19.873881, -12.581569, -1.759469)	(19.892937, -15.079818, -2.118932)	(24.846465, -14.93717, -2.669652)	(24.820147, -12.462808, -2.312767)	(19.89215, -15.017411, -2.109917)	(24.820465, -12.539828, -2.323819)	N/A	A
PNL(5,7)	(19.945837, -15.153599, -2.126059)	(19.974418, -17.494396, -2.526655)	(24.814964, -17.339873, -3.08421)	(24.786382, -14.999076, -2.683615)	(19.89461, -15.081576, -2.107662)	(19.917024, -17.570095, -2.532576)	(24.875467, -17.399667, -3.101652)	(24.844544, -14.935583, -2.679857)	(19.915986, -17.495931, -2.519868)	(24.845102, -15.02733, -2.69549)	N/A	A
PNL(5,8)	(19.973555, -17.644031, -2.540359)	(20.006423, -19.973442, -3.002303)	(24.843671, -19.790707, -3.579592)	(24.810804, -17.461296, -3.117648)	(19.918986, -17.572506, -2.519385)	(19.94479, -20.04948, -3.009433)	(24.908723, -19.849686, -3.599429)	(24.873316, -17.39759, -3.113052)	(19.943464, -19.963436, -2.992355)	(24.874173, -17.504118, -3.134096)	N/A	A
PNL(5,9)	(20.005437, -20.123075, -3.019779)	(20.042592, -22.439794, -3.541367)	(24.876232, -22.227824, -4.138544)	(24.839077, -19.911104, -3.616956)	(19.946766, -20.052258, -2.996165)	(19.976246, -22.5164, -3.549605)	(24.946334, -22.285868, -4.160834)	(24.906408, -19.847131, -3.611666)	(19.974588, -22.418584, -3.527571)	(24.907629, -19.968069, -3.638799)	N/A	A
PNL(5,10)	(20.041404, -22.589547, -3.563296)	(20.082914, -24.892181, -4.143623)	(24.912626, -24.649617, -4.760605)	(24.871116, -22.346983, -4.180278)	(19.978144, -22.519393, -3.536918)	(20.011376, -24.969445, -4.152865)	(24.988276, -24.706595, -4.785433)	(24.943757, -22.282671, -4.174422)	(20.00934, -24.859578, -4.125168)	(24.9454, -22.418248, -4.208479)	N/A	A
PNL(5,11)	(20.081811, -25.042536, -4.168029)	(20.127377, -27.329022, -4.808757)	(24.952452, -27.05376, -5.447905)	(24.906886, -24.767275, -4.807177)	(20.013513, -24.973181, -4.138672)	(20.050157, -27.407024, -4.818934)	(25.034007, -27.10947, -5.475445)	(24.985332, -24.702545, -4.800862)	(20.047714, -27.284969, -4.784729)	(24.987438, -24.853059, -4.842907)	N/A	A
PNL(5,12)	(20.126208, -27.479658, -4.836785)	(20.175967, -29.748725, -5.536416)	(24.99611, -29.43939, -6.196844)	(24.94635, -27.170323, -5.497212)	(20.052365, -27.411263, -4.804368)	(20.092575, -29.827577, -5.547401)	(25.08411, -29.493668, -6.227173)	(25.031098, -27.105076, -5.490588)	(20.089671, -29.693159, -5.505962)	(25.033746, -27.270811, -5.541535)	N/A	A
PNL(5,13)	(20.174784, -29.89969, -5.567821)	(20.228668, -32.149705, -6.326211)	(25.043357, -31.804501, -7.008287)	(24.989473, -29.554486, -6.249897)	(20.094897, -29.832431, -5.532192)	(20.138602, -32.22953, -6.33789)	(25.138274, -31.857141, -7.041535)	(25.081024, -29.488598, -6.243107)	(20.135196, -32.082613, -6.288389)	(25.08428, -29.669793, -6.304001)	N/A	A
PNL(5,14)	(20.227466, -32.300937, -6.361106)	(20.285458, -34.53038, -7.177712)	(25.094204, -34.14758, -7.881312)	(25.036212, -31.918137, -7.064706)	(20.141031, -32.235013, -6.322123)	(20.188216, -34.611322, -7.189962)	(25.196533, -34.198362, -7.917601)	(25.135076, -31.851467, -7.057902)	(20.184258, -34.451783, -7.131559)	(25.139012, -32.048334, -7.129804)	N/A	A
PNL(5,15)	(20.284244, -34.681828, -7.216163)	(20.346316, -36.889178, -8.090451)	(25.148598, -36.467014, -8.815357)	(25.086526, -34.259665, -7.941069)	(20.190748, -34.617459, -7.173677)	(20.241388, -36.971399, -8.103144)	(25.258837, -36.515696, -8.854813)	(25.193217, -34.192046, -7.93441)	(20.23683, -36.799204, -8.034994)	(25.197909, -34.404767, -8.018426)	N/A	A
PNL(5,16)	(20.345099, -37.040795, -8.132501)	(20.411216, -39.224531, -9.063923)	(25.206488, -38.761211, -9.809797)	(25.140371, -36.577474, -8.878374)	(20.244029, -36.978226, -8.086357)	(20.298088, -39.308219, -9.076928)	(25.325143, -38.807524, -9.852554)	(25.255406, -36.508718, -8.872024)	(20.292878, -39.123275, -8.998121)	(25.260929, -36.737381, -8.96928)	N/A	A
PNL(5,17)	(20.409994, -39.376238, -9.109677)	(20.48013, -41.534883, -10.097584)	(25.267836, -41.028633, -10.863877)	(25.197701, -38.869989, -9.87597)	(20.300832, -39.315798, -9.059721)	(20.358286, -41.620245, -10.110763)	(25.395419, -41.072291, -10.910065)	(25.321601, -38.799882, -9.870096)	(20.35237, -41.422488, -10.020365)	(25.328037, -39.044594, -9.981775)	N/A	A
PNL(5,18)	(20.478916, -41.686629, -10.147071)	(20.553025, -43.818684, -11.190851)	(25.332576, -43.267705, -11.976942)	(25.258466, -41.135651, -10.933163)	(20.361139, -41.628493, -10.093141)	(20.421946, -43.905954, -11.204067)	(25.469598, -43.30839, -12.026697)	(25.391757, -41.063951, -10.927937)	(20.41527, -43.695352, -11.101105)	(25.399187, -41.324773, -11.055266)	N/A	A
PNL(5,19)	(20.551818, -43.970384, -11.244163)	(20.629867, -46.074396, -12.343101)	(25.400668, -45.476935, -13.148159)	(25.322619, -43.372922, -12.049221)	(20.424905, -43.914935, -11.186101)	(20.489018, -46.163444, -12.356012)	(25.547626, -45.514345, -13.201627)	(25.465824, -43.299362, -12.044814)	(20.481539, -45.940383, -12.239691)	(25.474335, -43.576311, -12.189055)	N/A	A
PNL(5,20)	(20.627907, -46.228879, -12.393324)	(20.733894, -48.972267, -13.92901)	(25.461151, -47.477291, -14.284541)	(25.387877, -45.58064, -13.222839)	(20.493203, -46.176767, -12.331087)	(20.586316, -49.168952, -14.000441)	(25.623175, -47.576066, -14.379257)	(25.543754, -45.504628, -13.219864)	(20.55109, -48.1516, -13.431967)	(25.553135, -45.793784, -13.381281)	N/A	A
PNL(6,1)	(24.808472, -0.076108, -1.481659)	(24.811079, -2.450873, -1.515015)	(29.651179, -2.437382, -2.097144)	(29.648572, -0.062618, -2.063789)	(24.764538, 0, -1.475315)	(24.766676, -2.527271, -1.510735)	(29.696165, -2.499769, -2.103424)	(29.693078, 0, -2.068272)	(24.766624, -2.520387, -1.510633)	N/A	N/A	C
PNL(6,2)	(24.810874, -2.603227, -1.515846)	(24.818683, -4.9761, -1.616022)	(29.658146, -4.935429, -2.20217)	(29.650337, -2.562555, -2.101994)	(24.767302, -2.527364, -1.507381)	(24.773506, -5.052829, -1.613743)	(29.704595, -4.997528, -2.104894)	(29.695842, -2.499728, -2.104894)	(24.773319, -5.032169, -1.612856)	(29.695725, -2.524492, -2.105915)	N/A	C
PNL(6,3)	(24.818455, -5.128792, -1.61862)	(24.831474, -7.497884, -1.785538)	(29.669601, -7.429409, -2.380065)	(29.656582, -5.060318, -2.213147)	(24.774596, -5.053153, -1.607909)	(24.784866, -7.574992, -1.785145)	(29.718157, -7.49114, -2.390387)	(29.703677, -4.997297, -2.214583)	(24.784498, -7.540462, -1.78269)	(29.703579, -5.038723, -2.217462)	N/A	B
PNL(6,4)	(24.831225, -7.651099, -1.789943)	(24.849463, -10.014517, -2.02349)	(29.685522, -9.917196, -2.630689)	(29.667283, -7.553777, -2.397142)	(24.786417, -7.575684, -1.77685)	(24.800751, -10.09207, -2.024865)	(29.736837, -9.978459, -2.643226)	(29.716646, -7.490569, -2.397253)	(24.800157, -10.043526, -2.02004)	(29.716644, -7.548878, -2.402957)	N/A	B
PNL(6,5)	(24.849195, -10.168434, -2.029769)	(24.872668, -12.524293, -2.329778)	(29.705878, -12.396668, -2.953813)	(29.682405, -10.04081, -2.653805)	(24.802758, -10.093264, -2.014146)	(24.821152, -12.602373, -2.332795)	(29.76062, -12.457348, -2.96871)	(29.734737, -9.977402, -2.652745)	(24.820284, -12.539621, -2.324771)	(29.734915, -10.052904, -2.662283)	N/A	B
PNL(6,6)	(24.872402, -12.679106, -2.337889)	(24.901111, -15.025499, -2.704272)	(29.730609, -14.865694, -3.349279)	(29.7019, -12.5193, -2.982896)	(24.823635, -12.604221, -2.319561)	(24.84606, -15.10421, -2.708796)	(29.789456, -14.925652, -3.3667)	(29.757938, -12.455659, -2.980837)	(24.844868, -15.02701, -2.696707)	(29.758378, -12.548747, -2.995276)	N/A	B
PNL(6,7)	(24.900904, -15.18145, -2.713942)	(24.934816, -17.516427, -3.146789)	(29.759621, -17.322123, -3.816955)	(29.72571, -14.987146, -3.384108)	(24.849087, -15.106917, -2.692704)	(24.875454, -17.595585, -3.152611)	(29.823244, -17.38119, -3.837086)	(29.78623, -14.923212, -3.381245)	(24.873892, -17.503667, -3.135539)	(29.787017, -15.034356, -3.401727)	N/A	A
PNL(6,8)	(24.934688, -17.672981, -3.158561)	(24.973673, -19.994854, -3.656565)	(29.792852, -19.764123, -4.355063)	(29.753868, -17.44225, -3.857058)	(24.878912, -17.599196, -3.134278)	(24.909277, -20.074092, -3.663368)	(29.861837, -19.82212, -4.378049)	(29.819564, -17.377942, -3.853621)	(24.907299, -19.96744, -3.640463)	(29.820795, -17.507024, -3.881162)	N/A	A
PNL(6,9)	(24.973651, -20.150795, -3.671742)	(25.017335, -22.45831, -4.232178)	(29.830184, -22.190333, -4.960395)	(29.7865, -19.882817, -4.399959)	(24.912869, -20.078371, -3.644369)	(24.947459, -22.538425, -4.239881)	(29.904929, -22.247105, -4.986314)	(29.857789, -19.81805, -4.396168)	(24.945005, -22.417596, -4.210507)	(29.859546, -19.963863, -4.431418)	N/A	A
PNL(6,10)	(25.017196, -22.614601, -4.252488)	(25.065786, -24.906463, -4.87348)	(29.871937, -24.599578, -5.630024)	(29.823347, -22.307715, -5.009032)	(24.950901, -22.543004, -4.221786)	(24.989889, -24.987612, -4.881942)	(29.95297, -24.65496, -5.658964)	(29.900724, -22.242372, -5.005069)	(24.98698, -24.852235, -4.845237)	(29.903061, -22.405194, -5.048992)	N/A	A
PNL(6,11)	(25.065888, -25.063646, -4.896963)	(25.119013, -27.337645, -5.580138)	(29.917483, -26.989197, -6.366836)	(29.864358, -24.715198, -5.68366)	(24.993681, -24.993036, -4.862665)	(25.036831, -27.419949, -5.589268)	(30.005119, -27.042939, -6.399001)	(29.948293, -24.64915, -5.679669)	(25.033228, -27.269805, -5.544143)	(29.951261, -24.829427, -5.733599)	N/A	A
PNL(6,12)	(25.119241, -27.495474, -5.607554)	(25.176995, -29.750122, -6.351766)	(29.967244, -29.358147, -7.167546)	(29.90949, -27.103499, -6.423333)	(25.040643, -27.426079, -5.569522)	(25.087969, -29.833734, -6.361415)	(30.061972, -29.410018, -7.203058)	(30.000451, -27.036593, -6.419496)	(25.083698, -29.668582, -6.306893)	(30.00415, -27.234709, -6.484619)	N/A	A
PNL(6,13)	(25.177368, -29.908546, -6.383141)	(25.23971, -32.142165, -7.187931)	(30.021041, -31.704486, -8.032284)	(29.958699, -29.470868, -7.227494)	(25.091909, -29.840608, -6.341194)	(25.143373, -32.227259, -7.197956)	(30.123315, -31.754222, -8.071294)	(30.057159, -29.402922, -7.223991)	(25.138365, -32.0469, -7.132977)	(30.061681, -29.619208, -7.301604)	N/A	A
PNL(6,14)	(25.240234, -32.301111, -7.223342)	(25.307131, -34.512049, -8.088156)	(30.078834, -34.026509, -8.960352)	(30.011937, -31.815571, -8.095538)	(25.147437, -32.234901, -7.177297)	(25.203009, -34.598823, -8.09841)	(30.189115, -34.07382, -9.003012)	(30.118376, -31.746378, -8.092557)	(25.197195, -34.403094, -8.021875)	(30.123818, -31.981118, -8.184007)	N/A	A
PNL(6,15)	(25.307814, -34.67144, -8.12768)	(25.379227, -36.85806, -9.05192)	(30.140568, -36.322513, -9.951054)	(30.069156, -34.135894, -9.026815)	(25.207199, -34.607259, -8.077349)	(25.266844, -36.946736, -9.062252)	(30.259322, -36.367083, -9.997519)	(30.184056, -34.065218, -9.024546)	(25.260152, -36.735579, -8.973048)	(30.190518, -34.318643, -9.131236)	N/A	A
PNL(6,16)	(25.380068, -37.017795, -9.095668)	(25.455962, -39.178489, -10.078656)	(30.206198, -38.590835, -11.003617)	(30.130304, -36.430141, -10.020629)	(25.271155, -36.955972, -9.040866)	(25.33484, -39.269318, -10.088911)	(30.3339, -38.63232, -11.05404)	(30.254149, -36.357718, -10.019267)	(25.327194, -39.042631, -9.985861)	(30.261737, -36.629917, -10.142608)	N/A	A
PNL(6,17)	(25.45697, -39.338478, -10.126697)	(25.537297, -41.471639, -11.167753)	(30.275655, -40.8298, -12.117296)	(30.195328, -38.696639, -11.07624)	(25.339276, -39.279374, -10.067236)	(25.406958, -41.564899, -11.177776)	(30.412783, -40.867824, -12.171833)	(30.328605, -38.622171, -11.075979)	(25.398277, -41.322629, -11.059658)	(30.337426, -38.913264, -11.217475)	N/A	A
PNL(6,18)	(25.538471, -41.631771, -11.220184)	(25.623188, -43.735823, -12.318552)	(30.34889, -43.037787, -13.291232)	(30.264174, -40.933735, -12.192864)	(25.411515, -41.575777, -11.15588)	(25.48315, -43.831825, -12.328194)	(30.495905, -43.07195, -13.350029)	(30.407369, -40.856895, -12.193897)	(25.384619, -46.027267, -11.363188)	(30.415908, -43.69728, -11.097225)	N/A	A
PNL(6,19)	(25.624562, -43.896166, -12.375136)	(25.71362, -45.969553, -13.530021)	(30.425786, -45.213203, -14.524534)	(30.336727, -43.139815, -13.369649)	(25.487897, -43.843703, -12.305806)	(25.563037, -46.06058, -13.534622)	(30.582682, -45.243063, -14.587601)	(30.490368, -43.060229, -13.372186)	(25.552321, -45.791789, -13.385152)	(30.501907, -43.386799, -13.553344)	N/A	A
PNL(6,20)	(25.717112, -46.110507, -13.588397)	(25.771576, -47.361549, -14.318246)	(30.428268, -45.564529, -14.753797)	(30.417273, -45.31196, -14.60645)	(25.566609, -46.069861, -13.518071)	(25.620885, -47.570038, -14.389806)	(30.594006, -45.650907, -14.854953)	(30.576965, -45.230493, -14.610082)	(30.589616, -45.553583, -14.798727)	N/A	N/A	A
PNL(7,1)	(29.737201, -0.078854, -2.073814)	(29.740165, -2.453567, -2.110589)	(34.570583, -2.437355, -2.768178)	(34.567619, -0.062641, -2.731403)	(29.693435, 0, -2.066646)	(29.695863, -2.532783, -2.105769)	(34.615701, -2.499723, -2.775278)	(34.612071, 0, -2.736497)	(29.695787, -2.524504, -2.105632)	N/A	N/A	C
PNL(7,2)	(29.740121, -2.611498, -2.110778)	(29.748985, -4.983908, -2.221319)	(34.57843, -4.934967, -2.884413)	(34.569566, -2.562557, -2.773872)	(29.696867, -2.532922, -2.101198)	(29.703823, -5.063561, -2.218768)	(34.625339, -4.996989, -2.893734)	(34.615202, -2.499662, -2.777261)	(29.703551, -5.038712, -2.217585)	(34.615026, -2.528841, -2.778582)	N/A	C
PNL(7,3)	(29.749051, -5.142394, -2.222973)	(29.763833, -7.510194, -2.407174)	(34.591241, -7.427587, -3.081661)	(34.576459, -5.059787, -2.89746)	(29.70557, -5.064047, -2.210815)	(29.717058, -7.590372, -2.406744)	(34.640672, -7.489156, -3.093368)	(34.623938, -4.99665, -2.8993)	(29.71653, -7.548811, -2.403473)	(34.623777, -5.045503, -2.903034)	N/A	C
PNL(7,4)	(29.764011, -7.669544, -2.410364)	(29.784734, -10.030429, -2.668077)	(34.60898, -9.912584, -3.359729)	(34.588258, -7.551699, -3.102016)	(29.719544, -7.591409, -2.395442)	(29.735561, -10.11124, -2.669615)	(34.661679, -9.973569, -3.374002)	(34.638369, -7.48832, -3.102495)	(29.734715, -10.052748, -2.663182)	(34.63833, -7.55717, -3.109917)	N/A	B
PNL(7,5)	(29.785027, -10.19094, -2.672921)	(29.811724, -12.54261, -3.003922)	(34.631598, -12.387343, -3.718298)	(34.604901, -10.035674, -3.387298)	(29.738777, -10.11303, -2.655028)	(29.759322, -12.624188, -3.007261)	(34.68834, -12.447583, -3.735337)	(34.658482, -9.972023, -3.38663)	(29.758093, -12.548469, -2.996547)	(34.658678, -10.061319, -3.399074)	N/A	B
PNL(7,6)	(29.81216, -12.704591, -3.010427)	(29.844849, -15.044724, -3.414573)	(34.658999, -14.849237, -4.157115)	(34.62631, -12.509104, -3.752968)	(29.76329, -12.626949, -2.989317)	(29.78833, -15.127237, -3.419529)	(34.720589, -14.908539, -4.177149)	(34.684259, -12.445118, -3.751401)	(29.786649, -15.033926, -3.403353)	(34.684804, -12.55543, -3.770292)	N/A	B
PNL(7,7)	(29.845476, -15.208524, -3.422595)	(29.884168, -17.534778, -3.899747)	(34.691066, -17.295657, -4.675745)	(34.652375, -14.969404, -4.198594)	(29.793112, -15.131233, -3.397981)	(29.822541, -17.617737, -3.905958)	(34.758312, -17.353779, -4.699034)	(34.715672, -14.904975, -4.196417)	(29.820358, -17.506426, -3.883069)	(34.716689, -15.036982, -4.223292)	N/A	A
PNL(7,8)	(29.884995, -17.699171, -3.909796)	(29.929466, -20.009779, -4.45728)	(34.72759, -19.724604, -5.271099)	(34.68312, -17.413996, -4.723614)	(29.82798, -17.62303, -3.881562)	(29.861789, -20.092186, -4.464097)	(34.801143, -19.7813, -5.297828)	(34.752628, -17.348985, -4.721194)	(29.859069, -19.963086, -4.433465)	(34.75427, -17.502341, -4.75729)	N/A	A
PNL(7,9)	(29.930588, -20.172072, -4.470578)	(29.979996, -22.466234, -5.082951)	(34.768165, -22.13514, -5.937023)	(34.718757, -19.840977, -5.324651)	(29.867445, -20.098436, -4.438825)	(29.905837, -22.549893, -5.090352)	(34.848393, -22.190241, -5.967265)	(34.794823, -19.775256, -5.322336)	(29.902493, -22.404392, -5.051473)	(34.797205, -19.947513, -5.368055)	N/A	A
PNL(7,10)	(29.981167, -22.629213, -5.101681)	(30.035743, -24.905581, -5.776808)	(34.813346, -24.526376, -6.669186)	(34.75877, -22.250008, -5.994058)	(29.911358, -22.556662, -5.065874)	(29.954677, -24.990755, -5.784623)	(34.900776, -24.579654, -6.703073)	(34.841956, -22.183392, -5.992099)	(29.950604, -24.828417, -5.736439)	(34.845072, -22.374835, -6.048568)	N/A	A
PNL(7,11)	(30.037277, -25.069761, -5.799605)	(30.096688, -27.326112, -6.538507)	(34.862499, -26.895637, -7.469831)	(34.803088, -24.639286, -6.730928)	(29.960409, -24.998471, -5.759426)	(30.008273, -27.412982, -6.546596)	(34.957458, -26.946778, -7.507591)	(34.893856, -24.571575, -6.729529)	(30.003408, -27.233482, -6.487783)	(34.897773, -24.782856, -6.798349)	N/A	A
PNL(7,12)	(30.098532, -27.491315, -6.565769)	(30.162809, -29.725937, -7.367615)	(34.915939, -29.241553, -8.336508)	(34.851662, -27.00693, -7.534662)	(30.01415, -27.421599, -6.521007)	(30.066599, -29.814722, -7.375799)	(35.018876, -29.290242, -8.378318)	(34.950466, -26.937894, -7.53405)	(30.060852, -29.617738, -7.305096)	(34.955302, -27.169529, -7.616729)	N/A	A
PNL(7,13)	(30.164966, -29.892057, -7.399463)	(30.234074, -32.103174, -8.263646)	(34.973551, -31.562197, -9.268793)	(34.904444, -29.35108, -8.404611)	(30.072616, -29.824253, -7.349884)	(30.129621, -32.194118, -8.271746)	(35.084907, -31.608085, -9.314843)	(35.011741, -29.280452, -8.405016)	(30.1229, -31.979385, -8.187818)	(35.017613, -29.532894, -8.503163)	N/A	A
PNL(7,14)	(30.23655, -32.270098, -8.300193)	(30.310448, -34.455945, -9.226064)	(35.035279, -33.855743, -10.265945)	(34.961381, -31.669896, -9.340074)	(30.135773, -32.204579, -8.24556)	(30.197301, -34.549325, -9.233899)	(35.155495, -33.898446, -10.316425)	(35.077633, -31.597376, -9.34173)	(30.189512, -34.316631, -9.135356)	(35.084663, -31.871011, -9.457029)	N/A	A

| | | |

NOTE:

GC GLAZING CORNER

FC FRAME CORNER

IP INTERMEDIATE POINT

DOME GLAZING UNIT SCHEDULE

PANEL NAME	GC1 (ft)	GC2 (ft)	GC3 (ft)	GC4 (ft)	FC1 (ft)	FC2 (ft)	FC3 (ft)	FC4 (ft)	IP1 (ft)	IP2 (ft)	IP3 (ft)	MULLION TYPE
PNL(7,15)	(30.313245, -34.623547, -9.267428)	(30.391891, -36.782381, -10.254281)	(35.101067, -36.120393, -11.327154)	(35.022422, -33.961559, -10.340301)	(30.203582, -34.560723, -9.207507)	(30.269599, -36.878506, -10.261667)	(35.230587, -36.159495, -11.382252)	(35.148087, -33.886813, -10.343442)	(30.260644, -36.627757, -10.147096)	(35.156404, -34.181952, -10.477649)	N/A	A
PNL(7,16)	(30.395025, -36.95055, -10.300527)	(30.478355, -39.080622, -11.347655)	(35.17084, -38.354348, -12.451619)	(35.08751, -36.224276, -11.404492)	(30.276022, -36.89087, -10.235083)	(30.346469, -39.179834, -11.35441)	(35.310118, -38.389394, -12.511526)	(35.223048, -36.146929, -11.409351)	(30.336247, -38.910926, -11.222309)	(35.23278, -36.463675, -11.564237)	N/A	A
PNL(7,17)	(30.481819, -39.249204, -11.398921)	(30.569788, -41.34882, -12.505491)	(35.244559, -40.555893, -13.638368)	(35.15659, -38.456276, -12.531799)	(30.353028, -39.193153, -11.327731)	(30.42786, -41.451498, -12.511438)	(35.39403, -40.586395, -13.703258)	(35.302457, -38.375917, -12.538604)	(30.416268, -41.164391, -12.360267)	(35.313743, -38.71443, -12.716057)	N/A	A
PNL(7,18)	(30.573592, -41.517676, -12.561858)	(30.666134, -43.585141, -13.727041)	(35.322146, -42.723279, -14.88651)	(35.229604, -40.655814, -13.721327)	(30.434561, -41.465782, -12.484703)	(30.513302, -43.683763, -13.727517)	(35.481789, -42.748731, -14.956401)	(35.386235, -40.571995, -13.730293)	(30.500555, -43.384034, -13.55883)	(35.399131, -40.930041, -13.930984)	N/A	A
PNL(7,19)	(30.671518, -43.736675, -13.783062)	(30.748106, -45.427314, -14.787226)	(35.333432, -43.34945, -15.287046)	(35.309449, -42.820039, -14.9726)	(30.519342, -43.697172, -13.703873)	(30.593243, -45.649131, -14.857867)	(35.50371, -43.423927, -15.393129)	(35.473824, -42.733405, -14.983507)	(30.589035, -45.552371, -14.800461)	(35.487881, -43.087116, -15.192866)	N/A	A
PNL(8,1)	(34.656182, -0.081768, -2.742376)	(34.659396, -2.456408, -2.783633)	(39.480309, -2.437305, -3.507554)	(39.477095, -0.062666, -3.466298)	(34.612592, 0, -2.734424)	(34.615225, -2.538621, -2.778408)	(39.525593, -2.499654, -3.515428)	(39.521482, 0, -3.47189)	(34.615116, -2.528856, -2.778224)	N/A	N/A	D
PNL(8,2)	(34.659591, -2.620279, -2.783281)	(34.669188, -4.992015, -2.907379)	(39.488729, -4.934267, -3.638348)	(39.479132, -2.562531, -3.51425)	(34.616701, -2.538822, -2.772538)	(34.62411, -5.074792, -2.904794)	(39.53614, -4.996205, -3.64877)	(39.524876, -2.499568, -3.517961)	(34.62373, -5.045487, -2.903221)	(39.524615, -2.533231, -3.519662)	N/A	C
PNL(8,3)	(34.669676, -5.156727, -2.908298)	(34.685686, -7.522652, -3.115094)	(39.502355, -7.424898, -3.860594)	(39.486345, -5.058972, -3.653798)	(34.626687, -5.075493, -2.894555)	(34.638876, -7.606124, -3.114975)	(39.552682, -7.486283, -3.873772)	(39.534139, -4.995724, -3.655818)	(34.63815, -7.557077, -3.110626)	(39.533874, -5.052134, -3.660647)	N/A	C
PNL(8,4)	(34.686469, -7.688667, -3.117427)	(34.708937, -10.045879, -3.406691)	(39.521137, -9.905852, -4.173989)	(39.498669, -7.548641, -3.884725)	(34.642542, -7.607619, -3.100448)	(34.659516, -10.130207, -3.408854)	(39.575198, -9.966507, -4.190148)	(39.549401, -7.485099, -3.885294)	(34.658367, -10.061106, -3.400294)	(39.549269, -7.564698, -3.894917)	N/A	B
PNL(8,5)	(34.710025, -10.213651, -3.410586)	(34.739004, -12.559243, -3.782046)	(39.544986, -12.373793, -4.578139)	(39.516007, -10.028201, -4.206679)	(34.664267, -10.13279, -3.390097)	(34.686019, -12.644626, -3.786291)	(39.603644, -12.433503, -4.597538)	(39.570643, -9.964319, -4.206077)	(34.684362, -12.555052, -3.772011)	(39.570788, -10.06772, -4.222258)	N/A	B
PNL(8,6)	(34.740419, -12.729218, -3.787672)	(34.775967, -15.060279, -4.241008)	(39.573786, -14.825406, -5.072509)	(39.538237, -12.494345, -4.619172)	(34.691859, -12.648592, -3.763345)	(34.718368, -15.146962, -4.247101)	(39.637972, -14.883906, -5.095449)	(39.59784, -12.430022, -4.617731)	(34.716117, -15.036396, -4.225496)	(39.598414, -12.557998, -4.642368)	N/A	B
PNL(8,7)	(34.777769, -15.232973, -4.248204)	(34.819938, -17.546571, -4.783098)	(39.607341, -17.257395, -5.656463)	(39.565172, -14.943797, -5.121569)	(34.725394, -15.152684, -4.219654)	(34.756485, -17.633671, -4.790476)	(39.677987, -17.314341, -5.683284)	(39.630957, -14.878865, -5.119695)	(34.7536, -17.501539, -4.759834)	(39.632121, -15.032333, -5.154855)	N/A	A
PNL(8,8)	(34.82206, -17.719873, -4.792244)	(34.870617, -20.014217, -5.404005)	(39.645309, -19.667651, -6.324784)	(39.596752, -17.373307, -5.713023)	(34.764483, -17.641239, -4.75943)	(34.800033, -20.099735, -5.411469)	(39.723175, -19.722702, -6.355714)	(39.66983, -17.30754, -5.711265)	(34.79653, -19.946552, -5.370569)	(39.67182, -17.485995, -5.758469)	N/A	A
PNL(8,9)	(34.87313, -20.18304, -5.416228)	(34.926742, -22.458291, -6.095187)	(39.686903, -22.056084, -7.067151)	(39.633292, -19.780833, -6.388192)	(34.808306, -20.108562, -5.379563)	(34.848544, -22.54549, -6.102834)	(39.772456, -22.109076, -7.102266)	(39.713957, -19.714046, -6.387091)	(34.844282, -22.373859, -6.051568)	(39.716966, -19.913603, -6.446253)	N/A	A
PNL(8,10)	(34.929532, -22.628241, -6.112812)	(34.988302, -24.882848, -6.85707)	(39.732763, -24.421993, -7.878505)	(39.673993, -22.167387, -7.134247)	(34.856817, -22.555213, -6.071234)	(34.902009, -24.972178, -6.864693)	(39.826562, -24.472599, -7.918028)	(39.763015, -22.099287, -7.134169)	(34.896867, -24.781639, -6.801752)	(39.766895, -22.320209, -7.206633)	N/A	A
PNL(8,11)	(34.991543, -25.054413, -6.879637)	(35.055285, -27.286223, -7.689321)	(39.782497, -26.762955, -8.759502)	(39.718754, -24.531146, -7.949818)	(34.910466, -24.983016, -6.832734)	(34.960393, -27.377965, -7.696695)	(39.884973, -26.810767, -8.803714)	(39.816672, -24.461424, -7.95107)	(34.954282, -27.168053, -7.62051)	(39.821513, -24.704672, -8.038759)	N/A	A
PNL(8,12)	(35.059011, -27.459321, -7.716883)	(35.127665, -29.666362, -8.591458)	(39.836176, -29.077145, -9.708761)	(39.767522, -26.870104, -8.834186)	(34.969061, -27.389989, -7.664321)	(35.023664, -29.760841, -8.598337)	(39.94782, -29.121719, -9.757932)	(39.874859, -26.798407, -8.837086)	(35.01648, -29.531139, -8.507302)	(39.88079, -27.064702, -8.941937)	N/A	A
PNL(8,13)	(35.131855, -29.840825, -8.624259)	(35.205407, -32.021214, -9.562937)	(39.893794, -31.362671, -10.725252)	(39.820242, -29.182281, -9.786574)	(35.032515, -29.774039, -8.565708)	(35.091785, -32.118803, -9.569066)	(40.015109, -31.403522, -10.779651)	(39.937523, -29.108203, -9.791447)	(35.083415, -31.868953, -9.461521)	(39.944689, -29.398206, -9.915493)	N/A	A
PNL(8,14)	(35.210063, -32.196893, -9.601135)	(35.288471, -34.348735, -10.603159)	(39.955264, -33.617565, -11.808172)	(39.876856, -31.465722, -10.806149)	(35.100813, -32.133183, -9.536258)	(35.164714, -34.449851, -10.608279)	(40.086756, -33.654156, -11.868071)	(40.00461, -31.388807, -10.813323)	(35.155041, -34.179575, -10.48248)	(40.013162, -31.703094, -10.958719)	N/A	A
PNL(8,15)	(35.293589, -34.525461, -10.646918)	(35.376808, -36.646888, -11.711458)	(40.020529, -35.839926, -12.956565)	(39.93731, -33.718499, -11.892025)	(35.173908, -34.465413, -10.575379)	(35.242406, -36.751996, -11.715313)	(40.162702, -35.871672, -13.022231)	(40.07606, -33.638237, -11.901828)	(35.231309, -36.461137, -11.569469)	(40.086157, -33.977294, -12.070837)	N/A	A
PNL(8,16)	(35.382387, -36.824487, -11.760924)	(35.470363, -38.913646, -12.887112)	(40.089523, -38.027872, -14.169448)	(40.001548, -35.938713, -13.04326)	(35.25177, -36.768741, -11.682397)	(35.324807, -39.023263, -12.889448)	(40.242867, -38.054134, -14.24114)	(40.151812, -35.854538, -13.056014)	(35.312163, -38.711694, -12.721672)	(40.163615, -36.218557, -13.25091)	N/A	A
PNL(8,17)	(35.476401, -39.091932, -12.942421)	(35.56907, -41.146993, -14.129334)	(40.162181, -40.179556, -15.445777)	(40.069512, -38.124495, -14.258864)	(35.334345, -39.041187, -12.856588)	(35.411405, -41.252839, -14.124773)	(40.326703, -40.199668, -15.523562)	(40.231776, -38.035791, -14.274873)	(35.397449, -40.927093, -13.936933)	(40.245329, -38.421531, -14.496106)	N/A	A
PNL(8,18)	(35.57669, -41.30675, -14.183436)	(35.661983, -43.184383, -15.328934)	(40.169948, -40.842763, -15.886047)	(40.144054, -40.27272, -15.538278)	(35.420331, -41.270324, -14.09464)	(35.501854, -43.420111, -15.399231)	(40.346354, -40.903682, -15.997934)	(40.315375, -40.180134, -15.557328)	(35.487139, -43.085792, -15.195474)	(40.330206, -40.561004, -15.788625)	N/A	A
PNL(9,1)	(39.565627, -0.084729, -3.478051)	(39.568889, -2.459264, -3.524945)	(44.380826, -2.437225, -4.306226)	(44.377564, -0.06269, -4.259332)	(39.522203, 0, -3.469342)	(39.524892, -2.54453, -3.519462)	(44.426294, -2.499556, -4.314829)	(44.421859, 0, -4.265304)	(39.524741, -2.53325, -3.519218)	N/A	N/A	D
PNL(9,2)	(39.56944, -2.629198, -3.524218)	(39.579159, -4.999981, -3.665344)	(44.389284, -4.933243, -4.455199)	(44.379564, -2.56246, -4.314073)	(39.526938, -2.544811, -3.512238)	(39.534306, -5.085952, -3.663001)	(44.437159, -4.995093, -4.466739)	(44.425319, -2.499436, -4.317915)	(39.533795, -5.05211, -3.660925)	(44.424939, -2.537296, -4.32008)	N/A	C
PNL(9,3)	(39.580261, -5.171112, -3.665869)	(39.596487, -7.534388, -3.901011)	(44.402813, -7.421047, -4.708482)	(44.386587, -5.057772, -4.47334)	(39.537891, -5.086935, -3.650376)	(39.549948, -7.621243, -3.901625)	(44.453873, -7.482229, -4.723195)	(44.434455, -4.99443, -4.475265)	(39.548992, -7.564571, -3.89589)	(44.43402, -5.057928, -4.481434)	N/A	C
PNL(9,4)	(39.598146, -7.707382, -3.902975)	(39.620943, -10.059394, -4.23183)	(44.421331, -9.896279, -5.065672)	(44.398534, -7.544268, -4.736817)	(39.555061, -7.623346, -3.883684)	(39.571806, -10.147352, -4.23521)	(44.476399, -9.956564, -5.08382)	(44.449442, -7.480602, -4.737107)	(39.570314, -10.06743, -4.223907)	(44.449115, -7.570309, -4.749436)	N/A	B
PNL(9,5)	(39.623163, -10.234884, -4.235548)	(39.652629, -12.57189, -4.657639)	(44.44473, -12.35462, -5.526075)	(44.415265, -10.017615, -5.103984)	(39.578421, -10.150975, -4.212123)	(39.599868, -12.661213, -4.663571)	(44.504712, -12.413727, -5.547964)	(44.470259, -9.953565, -5.102979)	(39.597742, -12.557487, -4.644682)	(44.47021, -10.07027, -5.123769)	N/A	B
PNL(9,6)	(39.655434, -12.750491, -4.663426)	(39.691669, -15.06874, -5.178241)	(44.472835, -14.791771, -6.088936)	(44.4366, -12.473523, -5.574122)	(39.607981, -12.666756, -4.635457)	(39.634109, -15.159757, -5.186471)	(44.538736, -14.84935, -6.114928)	(44.496873, -12.408954, -5.572233)	(39.631249, -15.03154, -5.157823)	(44.497284, -12.553644, -5.603988)	N/A	A
PNL(9,7)	(39.695112, -15.251159, -5.186021)	(39.73825, -17.546922, -5.792848)	(44.505387, -17.203523, -6.753112)	(44.462249, -14.907761, -6.146286)	(39.643846, -15.167719, -5.153024)	(39.674402, -17.638394, -5.80259)	(44.578242, -17.259114, -6.783617)	(44.529242, -14.842437, -6.14404)	(39.670809, -17.484917, -5.761866)	(44.53031, -15.01627, -6.189504)	N/A	A
PNL(9,8)	(39.742262, -17.730462, -5.80202)	(39.792111, -20.00176, -6.494369)	(44.541781, -19.587461, -7.511529)	(44.491932, -17.316164, -6.819179)	(39.685728, -17.64912, -5.764069)	(39.720228, -20.090383, -6.503644)	(44.622476, -19.640575, -7.546828)	(44.56712, -17.249746, -6.81735)	(39.716031, -19.912421, -6.449327)	(44.569183, -17.452329, -6.878529)	N/A	A
PNL(9,9)	(39.796374, -20.177914, -6.506577)	(39.851506, -22.42671, -7.268485)	(44.581179, -21.945222, -8.347368)	(44.526047, -19.696427, -7.585461)	(39.731801, -20.102659, -6.464648)	(39.770878, -22.517509, -7.277544)	(44.670613, -21.995713, -8.387578)	(44.609798, -19.628633, -7.584865)	(39.765818, -22.319025, -7.210246)	(44.613231, -19.855159, -7.661059)	N/A	A
PNL(9,10)	(39.856282, -22.604643, -7.285765)	(39.916452, -24.828915, -8.116198)	(44.623764, -24.275749, -9.256747)	(44.563593, -22.051477, -8.426314)	(39.782767, -22.531288, -7.237973)	(39.826324, -24.922652, -8.124761)	(44.722643, -24.32312, -9.302274)	(44.657158, -21.981835, -8.42754)	(39.820292, -24.703214, -8.042807)	(44.661584, -22.232607, -8.520494)	N/A	A
PNL(9,11)	(39.921772, -25.009272, -8.138906)	(39.986963, -27.20685, -9.037252)	(44.669615, -26.577086, -10.237999)	(44.604424, -24.379508, -9.339653)	(39.838551, -24.938, -8.084615)	(39.886544, -27.303998, -9.044924)	(44.778678, -26.620755, -10.289276)	(44.708659, -24.307512, -9.343214)	(39.879426, -27.062948, -8.946396)	(44.714191, -24.584025, -9.455421)	N/A	A
PNL(9,12)	(39.99283, -27.389514, -9.065614)	(40.063029, -29.558262, -10.031134)	(44.718663, -28.847088, -11.290074)	(44.648463, -26.67834, -10.324554)	(39.899108, -27.320957, -9.004279)	(39.951503, -29.659374, -10.03749)	(44.838684, -28.886386, -11.347559)	(44.764208, -26.6034, -10.330985)	(39.943179, -29.396127, -9.920359)	(44.771008, -26.906823, -10.465051)	N/A	A
PNL(9,13)	(40.069433, -29.743083, -10.065404)	(40.144629, -31.880893, -11.097265)	(44.770835, -31.083639, -12.411886)	(44.695639, -28.945829, -11.380025)	(39.964392, -29.677968, -9.996457)	(40.021161, -31.986612, -11.101852)	(44.902613, -31.117809, -12.476056)	(44.823748, -28.867259, -11.389888)	(40.011503, -31.700665, -10.96398)	(44.831998, -29.198709, -11.548624)	N/A	A
PNL(9,14)	(40.15156, -32.0677, -11.13769)	(40.231729, -34.172485, -12.234996)	(44.826053, -33.284654, -13.602318)	(44.745884, -31.179869, -12.505013)	(40.034366, -32.006858, -11.060543)	(40.095477, -34.283548, -12.237344)	(44.970401, -33.312839, -13.67367)	(44.887222, -31.096878, -12.518888)	(40.084349, -33.974495, -12.076477)	(44.897116, -31.457394, -12.705321)	N/A	A
PNL(9,15)	(40.239169, -34.361081, -12.281828)	(40.324283, -36.43078, -13.443607)	(44.884247, -35.448094, -14.860182)	(44.799133, -33.378395, -13.698403)	(40.108983, -34.30545, -12.195882)	(40.174397, -36.548028, -13.443233)	(45.041932, -35.469347, -14.939201)	(44.954565, -33.290082, -13.716883)	(40.161664, -36.215571, -13.257017)	(44.966314, -33.680605, -13.93425)	N/A	A
PNL(9,16)	(40.332224, -36.620962, -13.497064)	(40.422232, -38.653523, -14.722306)	(44.945338, -37.571945, -16.184268)	(44.855329, -35.539383, -14.959026)	(40.188215, -36.571594, -13.401717)	(40.257322, -38.766537, -14.711851)	(45.116482, -37.58523, -16.271153)	(45.025658, -35.444741, -14.982685)	(40.243257, -38.418348, -14.502586)	(45.039246, -35.859128, -15.230278)	N/A	A
PNL(9,17)	(40.431272, -38.8194, -14.774706)	(40.512512, -40.646442, -15.936054)	(44.936078, -38.058967, -16.540809)	(44.918289, -37.658912, -16.286516)	(40.269649, -38.788433, -14.6756)	(40.343329, -40.898055, -16.006593)	(45.121146, -38.103368, -16.659778)	(45.099712, -37.558819, -16.315017)	(40.329187, -40.55942, -15.791796)	(45.114937, -37.968304, -16.573825)	N/A	A
PNL(10,1)	(44.466095, -0.0875, -4.271755)	(44.469074, -2.461891, -4.325443)	(49.272874, -2.437102, -5.155209)	(49.269895, -0.062711, -5.101521)	(44.422804, 0, -4.262313)	(44.425313, -2.550025, -4.319853)	(49.318537, -2.499419, -5.164497)	(49.314052, 0, -5.107749)	(44.425111, -2.53732, -4.319534)	N/A	N/A	C
PNL(10,2)	(44.470115, -2.637532, -4.324681)	(44.47896, -5.007009, -4.486322)	(49.280507, -4.931801, -5.326033)	(49.271662, -2.562324, -5.164392)	(44.427992, -2.550402, -4.311383)	(44.434554, -5.095993, -4.484521)	(49.328748, -4.993564, -5.338693)	(49.317245, -2.499256, -5.168151)	(44.433894, -5.057893, -4.48183)	(49.3167, -2.540487, -5.170841)	N/A	C
PNL(10,3)	(44.480893, -5.18427, -4.487048)	(44.495672, -7.543907, -4.756337)	(49.292473, -7.415699, -5.616502)	(49.277694, -5.056061, -5.347214)	(44.439279, -5.097326, -4.469637)	(44.449902, -7.63397, -4.758166)	(49.343943, -7.476673, -5.632776)	(49.325193, -4.992669, -5.348713)	(44.4487, -7.570137, -4.750735)	(49.324492, -5.061882, -5.356404)	N/A	B
PNL(10,4)	(44.498502, -7.723688, -4.758843)	(44.519313, -10.068569, -5.135308)	(49.308667, -9.883067, -6.025983)	(49.287855, -7.538186, -5.649519)	(44.456658, -7.636823, -4.737006)	(44.471344, -10.159975, -5.140611)	(49.364081, -9.942966, -6.046144)	(49.33813, -7.474483, -5.649059)	(44.469509, -10.069885, -5.125948)	(49.337441, -7.572379, -5.664477)	N/A	A
PNL(10,5)	(44.523059, -10.251733, -5.139995)	(44.55003, -12.576945, -5.622993)	(49.328926, -12.328217, -6.553539)	(49.301954, -10.003005, -6.070541)	(44.48012, -10.164902, -5.113345)	(44.498863, -12.670006, -5.631592)	(49.389113, -12.38669, -6.577909)	(49.356033, -9.938936, -6.068493)	(44.496295, -12.552968, -5.607031)	(49.355534, -10.066475, -6.09458)	N/A	A
PNL(10,6)	(44.55471, -12.764291, -5.630423)	(44.588005, -15.064941, -6.219087)	(49.353041, -14.74554, -7.197878)	(49.319746, -12.44489, -6.609215)	(44.509633, -12.677535, -5.598481)	(44.532428, -15.160051, -6.230759)	(49.418998, -14.802154, -7.226847)	(49.378867, -12.380307, -6.606043)	(44.529026, -15.015219, -6.19341)	(49.378748, -12.538673, -6.646028)	N/A	A
PNL(10,7)	(44.59366, -15.257398, -6.229319)	(44.633522, -17.528673, -6.922389)	(49.38068, -17.12959, -7.957204)	(49.340819, -14.858315, -7.264134)	(44.545353, -15.170842, -6.191524)	(44.571858, -17.624507, -6.936222)	(49.453501, -17.183766, -7.99122)	(49.406586, -14.79293, -7.260461)	(44.567697, -17.450907, -6.882977)	(49.407063, -14.983484, -7.317911)	N/A	A
PNL(10,8)	(44.640054, -17.723729, -6.933624)	(44.68662, -19.96325, -7.722929)	(49.411052, -19.477431, -8.822633)	(49.364485, -17.23791, -8.033329)	(44.587248, -17.639341, -6.890179)	(44.616531, -20.055335, -7.736055)	(49.491902, -19.528491, -8.862047)	(49.438888, -17.171245, -8.030177)	(44.611927, -19.85368, -7.664873)	(49.440403, -17.394292, -8.107951)	N/A	A
PNL(10,9)	(44.693247, -20.149395, -7.736188)	(44.745505, -22.361131, -8.59997)	(49.443271, -21.792471, -9.771827)	(49.391013, -19.580735, -8.908045)	(44.632556, -20.072544, -7.688754)	(44.665599, -22.456029, -8.612726)	(49.533933, -21.840181, -9.816951)	(49.47492, -19.512314, -8.906628)	(44.660124, -22.231167, -8.524859)	(49.478171, -19.764263, -9.004226)	N/A	A
PNL(10,10)	(44.752689, -22.550282, -8.617946)	(44.810271, -24.7318, -9.555116)	(49.476991, -24.073166, -10.801532)	(49.419409, -21.891647, -9.864362)	(44.682499, -22.475726, -8.563643)	(44.718999, -24.830827, -9.567004)	(49.5788, -24.116736, -10.853115)	(49.515093, -21.820662, -9.86572)	(44.71255, -24.582269, -9.460261)	(49.519497, -22.102407, -9.985766)	N/A	A
PNL(10,11)	(44.818, -24.925116, -9.578673)	(44.881032, -27.073882, -10.588355)	(49.512457, -26.31757, -11.908779)	(49.449425, -24.168804, -10.899098)	(44.736754, -24.853108, -9.516341)	(44.776719, -27.177954, -10.598594)	(49.626933, -26.356011, -11.967661)	(49.55868, -24.094319, -10.904228)	(44.769178, -26.904714, -10.470372)	(49.564382, -24.408533, -11.050609)	N/A	A
PNL(10,12)	(44.889255, -27.271299, -10.618033)	(44.95786, -29.384798, -11.699255)	(49.549512, -28.523203, -13.092098)	(49.480907, -26.409704, -12.010876)	(44.795289, -27.202877, -10.546615)	(44.838728, -29.495043, -11.706948)	(49.678285, -28.555317, -13.159225)	(49.605551, -26.330565, -12.020884)	(44.829966, -29.196203, -11.55444)	(49.612795, -26.679626, -12.197834)	N/A	A
PNL(10,13)	(44.966522, -29.586211, -11.735576)	(45.040797, -31.66193, -12.887313)	(49.587996, -30.687644, -14.349974)	(49.513721, -28.611925, -13.198236)	(44.858079, -29.522658, -11.653896)	(44.90499, -31.77972, -12.891453)	(49.732785, -30.711989, -14.426402)	(49.65565, -28.52615, -13.21434)	(44.89487, -31.454452, -12.711638)	(49.664716, -28.913057, -13.426626)	N/A	A
PNL(10,14)	(45.049847, -31.867195, -12.930769)	(45.129855, -33.902617, -14.151949)	(49.627765, -32.808548, -15.680819)	(49.547757, -30.773126, -14.459639)	(44.925101, -31.810076, -12.837547)	(44.975529, -34.031792, -14.152737)	(49.790248, -32.823764, -15.767854)	(49.708915, -30.680129, -14.483159)	(44.963845, -33.677187, -13.941072)	(49.720116, -31.106184, -14.736108)	N/A	A
PNL(10,15)	(45.145468, -34.137578, -14.171519)	(45.295027, -37.828463, -16.59835)	(49.660694, -35.034394, -17.19367)	(49.57403, -32.895651, -15.787403)	(45.009292, -34.085789, -14.064649)	(45.116577, -38.095489, -16.671133)	(49.851059, -35.065375, -17.316745)	(49.765915, -32.789402, -15.824092)	(45.04459, -35.866446, -15.21545)	(45.111215, -37.963191, -16.584143)	(49.777781, -33.242267, -16.118339)	A
PNL(11,1)	(49.358473, -0.089729, -5.114371)	(49.360641, -2.463925, -5.176135)	(54.15737, -2.436921, -6.045787)	(54.155201, -0.062725, -5.984023)	(49.315299, 0, -5.104218)	(49.317191, -2.554381, -5.170589)	(54.203197, -2.499228, -6.055712)	(54.199161, 0, -5.990377)	(49.316932, -2.540516, -5.170184)	N/A	N/A	C
PNL(11,2)	(49.362391, -2.644229, -5.175353)	(49.368788, -5.011932, -5.361277)	(54.162822, -4.929802, -6.24225)	(54.156425, -2.562099, -6.056326)	(49.320702, -2.554893, -5.160666)	(49.325115, -5.103378, -5.360328)	(54.211201, -4.991488, -6.256018)	(54.201583, -2.49902, -6.059763)	(49.324303, -5.061835, -5.356936)	(54.200812, -2.542557, -6.063018)	N/A	B
PNL(11,3)	(49.371874, -5.194364, -5.362407)	(49.382607, -7.549082, -5.671942)	(54.170993, -7.408423, -6.575934)	(54.16026, -5.053705, -6.266399)	(49.331295, -5.105179, -5.342945)	(49.338271, -7.641775, -5.675506)	(54.222303, -7.469201, -6.593754)	(54.206769, -4.990343, -6.267084)	(49.336847, -7.572158, -5.666141)	(54.205662, -5.063496, -6.276423)	N/A	A
PNL(11,4)	(49.387023, -7.734801, -5.675487)	(49.402244, -10.070068, -6.107831)	(54.181753, -9.865243, -7.045898)	(54.166531, -7.529976, -6.613554)	(49.347078, -7.645611, -5.650939)	(49.356644, -10.164293, -6.115841)	(54.236462, -9.924772, -7.068008)	(54.215027, -7.466392, -6.611767)	(49.35454, -10.065984, -6.097341)	(54.213727, -7.569984, -6.630542)	N/A	A
PNL(11,5)	(49.40798, -10.260145, -6.114517)	(49.4279, -12.569538, -6.668533)	(54.194915, -12.292806, -7.65068)	(54.174995, -9.983414, -7.096663)	(49.368018, -10.170866, -6.084483)	(49.380218, -12.665621, -6.680918)	(54.253662, -12.350678, -7.677368)	(54.226343, -9.919593, -7.092762)	(49.37735, -12.537812, -6.649869)	(54.225, -10.054735, -7.124631)	N/A	A
PNL(11,6)	(49.434936, -12.76492, -6.679325)	(49.459823, -15.042078, -7.353535)	(54.210231, -14.683775, -8.388361)	(54.185344, -12.406617, -7.714152)	(49.394069, -12.675559, -6.643295)	(49.40895, -15.140422, -7.370186)	(54.27388, -14.739487, -8.419985)	(54.240692, -12.342442, -7.708602)	(49.405241, -14.982146, -7.322849)	(54.239472, -12.510476, -7.757619)	N/A	A
PNL(11,7)	(49.46811, -15.243776, -7.369027)	(49.498413, -17.482566, -8.161193)	(54.227364, -17.031132, -9.256117)	(54.197061, -14.792343, -8.463951)	(49.425364, -15.154434, -7.326409)	(49.442644, -17.582369, -8.181371)	(54.297071, -17.084043, -9.293119)	(54.258038, -14.727531, -8.457408)	(49.438251, -17.392444, -8.113686)	(54.257146, -14.929961, -8.528073)	N/A	A
PNL(11,8)	(49.508313, -17.690499, -8.176768)	(49.544397, -19.886803, -9.079857)	(54.244941, -19.329975, -10.246241)	(54.208857, -17.133671, -9.343152)	(49.463199, -17.602581, -8.127679)	(49.480747, -19.983933, -9.100465)	(54.322299, -19.379132, -10.289133)	(54.278142, -17.067618, -9.336841)	(49.47629, -19.762352, -9.009112)	(54.277994, -17.306267, -9.433764)	N/A	A
PNL(11,9)	(49.554269, -20.090048, -9.096021)	(49.597218, -22.24905, -10.084704)	(54.263, -21.585131, -11.331829)	(54.220051, -19.426129, -10.343147)	(49.5034, -20.008718, -9.042449)	(49.522582, -22.350219, -10.105622)	(54.351917, -21.629859, -11.381495)	(54.300246, -19.357902, -10.338939)	(49.517437, -22.100584, -9.991247)	(54.302009, -19.636519, -10.465274)	N/A	A
PNL(11,10)	(49.607367, -22.458973, -10.105017)	(49.657308, -24.577497, -11.177392)	(54.279697, -23.792605, -12.512716)	(54.229756, -21.674081, -11.440342)	(49.547494, -22.379728, -10.043248)	(49.567989, -24.685047, -11.19754)	(54.383273, -23.831388, -12.570676)	(54.325357, -21.602132, -11.440247)	(49.562063, -24.406309, -11.056686)	(54.328589, -21.924555, -11.601823)	N/A	A
PNL(11,11)	(49.667651, -24.796029, -11.203528)	(49.725134, -26.870422, -12.358608)	(54.294904, -25.949506, -13.785052)	(54.23742, -23.875112, -12.629972)	(49.595133, -24.719566, -11.131243)	(49.616964, -26.986543, -12.376261)	(54.416689, -25.980243, -13.853203)	(54.352809, -23.797331, -12.636266)	(49.61017, -26.676916, -12.204606)	(54.357832, -24.169943, -12.841509)	N/A	A
PNL(11,12)	(49.735529, -27.097904, -12.391814)	(49.80107, -29.124446, -13.628525)	(54.308151, -28.052586, -15.146076)	(54.24261, -26.026044, -13.909365)	(49.646286, -27.026309, -12.306558)	(49.669484, -29.252058, -13.641509)	(54.452112, -28.072468, -15.226737)	(54.382448, -25.939536, -13.924775)	(49.661727, -28.90976, -13.434203)	(54.389799, -26.369106, -14.183795)	N/A	A
PNL(11,13)	(49.811324, -29.361033, -13.670122)	(49.885371, -31.335939, -14.987274)	(54.319046, -30.098882, -16.592837)	(54.245, -28.123976, -15.275685)	(49.700914, -29.297246, -13.568975)	(49.725445, -31.476606, -14.991463)	(54.489162, -30.104577, -16.688814)	(54.41422, -28.024865, -15.303409)	(49.716699, -31.10218, -14.744614)	(54.42458, -28.518867, -15.628452)	N/A	A
PNL(11,14)	(49.897203, -31.600049, -15.003453)	(50.024444, -34.737726, -17.871599)	(54.296506, -31.754627, -17.871599)	(54.232374, -30.173175, -16.716913)	(49.771939, -31.547233, -14.887669)	(49.825529, -35.025392, -17.372369)	(54.510791, -31.753764, -18.005389)	(54.449049, -30.05152, -16.767079)	(49.786032, -33.252467, -16.098201)	(54.461752, -30.586509, -17.152058)	N/A	A
PNL(12,1)	(54.243698, -0.091247, -5.997589)	(54.244575, -2.465199, -6.068112)	(59.035632, -2.436683, -6.968438)	(59.034755, -0.062731, -6.897916)	(54.200593, 0, -5.986777)	(54.201448, -2.557259, -6.062728)	(59.080227, -2.499009, -6.978673)	(59.078533, 0, -6.904291)	(54.201124, -2.542592, -6.062232)	N/A	N/A	C

DESIGN BY:												
DRAWN BY:		4	7/3/2023	ISSUED FOR BID								
CHECKED BY:												
APPROVED BY:		0	9/9/2022	ISSUED FOR PERMIT	MN	ZT	SD					
CDOT/APPROVED BY:		NO.	DATE	REVISIONS	DES.	DRW.	CHK.	DCCO	CDOT			

TRANSYSTEMS
222 SOUTH RIVERSIDE PLAZA SUITE 610
CHICAGO, ILLINOIS 60606

SKIDMORE, OWINGS & MERRILL LLP
224 SOUTH MICHIGAN AVENUE, SUITE 1000
CHICAGO, ILLINOIS 60604

CHICAGO DEPARTMENT OF TRANSPORTATION
DIVISION OF ENGINEERING

STATE / LAKE LOOP ELEVATED STATION
200 NORTH STATE STREET, CHICAGO, IL 60601

SPEC. NO.

DOME GLAZING UNIT GEOMETRY CHART

DRAWING NO. A-504

CDOT PROJECT D-1-209 | DATE: 9/9/2022 | REVISION NO.

NOTE:

GC GLAZING CORNER

FC FRAME CORNER

IP INTERMEDIATE POINT

DOME GLAZING UNIT SCHEDULE

PANEL NAME	GC1 (ft)	GC2 (ft)	GC3 (ft)	GC4 (ft)	FC1 (ft)	FC2 (ft)	FC3 (ft)	FC4 (ft)	IP1 (ft)	IP2 (ft)	IP3 (ft)	MULLION TYPE
PNL(12,2)	(54.246758, -2.648684, -6.068803)	(54.249261, -5.014176, -6.281086)	(59.037401, -4.927262, -7.193113)	(59.034897, -2.561769, -6.98083)	(54.205436, -2.557853, -6.052732)	(54.206367, -5.107352, -6.281189)	(59.082543, -4.988982, -7.207311)	(59.079109, -2.498711, -6.983677)	(54.205402, -5.063438, -6.277071)	(59.078557, -2.544159, -6.98764)	N/A	A
PNL(12,3)	(54.253093, -5.200229, -6.284695)	(54.257303, -7.548751, -6.638325)	(59.039102, -7.399118, -7.575142)	(59.034893, -5.050597, -7.221512)	(54.213615, -5.109507, -6.263148)	(54.21452, -7.643324, -6.643949)	(59.08479, -7.459933, -7.593443)	(59.079473, -4.987349, -7.220955)	(54.212911, -7.569713, -6.632568)	(59.078621, -5.062759, -7.232112)	N/A	A
PNL(12,4)	(54.262823, -7.738848, -6.645234)	(54.26889, -10.061878, -7.139317)	(59.040607, -9.842315, -8.113042)	(59.03454, -7.519285, -7.618959)	(54.225106, -7.648026, -6.617903)	(54.225896, -10.158134, -7.150543)	(59.086973, -9.901888, -8.135594)	(59.079832, -7.455993, -7.615217)	(54.223632, -10.054131, -7.127997)	(59.078731, -7.560774, -7.637209)	N/A	A
PNL(12,5)	(54.276158, -10.257433, -7.150169)	(54.284288, -12.546455, -7.783365)	(59.041686, -12.24703, -8.804707)	(59.033555, -9.958007, -8.171511)	(54.2399, -10.166376, -7.116642)	(54.240478, -12.64469, -7.800292)	(59.089088, -12.304972, -8.831687)	(59.080189, -9.89475, -8.164886)	(54.237546, -12.509418, -7.762304)	(59.078885, -10.02807, -8.201353)	N/A	A
PNL(12,6)	(54.293339, -12.748717, -7.799241)	(54.303826, -14.995291, -8.569578)	(59.042075, -14.603667, -9.647191)	(59.031589, -12.357092, -8.876854)	(54.257904, -12.6574, -7.758979)	(54.258232, -15.09585, -8.592283)	(59.091175, -14.659509, -9.678826)	(59.080547, -12.293845, -8.86776)	(54.254625, -14.928309, -8.534112)	(59.079086, -12.454625, -8.922325)	N/A	A
PNL(12,7)	(54.314492, -15.205239, -8.592086)	(54.327992, -17.401452, -9.496018)	(59.041603, -16.903312, -10.635911)	(59.028103, -14.7071, -9.731979)	(54.278929, -15.113759, -8.544454)	(54.279026, -17.505048, -9.524513)	(59.093544, -16.95647, -10.672507)	(59.080904, -14.64366, -9.721035)	(54.274947, -17.303936, -9.440928)	(59.079356, -14.830592, -9.797205)	N/A	A
PNL(12,8)	(54.339888, -17.622025, -9.523159)	(54.358482, -19.761955, -10.553197)	(59.03977, -19.139047, -11.762805)	(59.021177, -16.999116, -10.732767)	(54.304322, -17.530173, -9.467749)	(54.302678, -19.870522, -10.587178)	(59.097311, -19.188639, -11.805069)	(59.081273, -16.934785, -10.721336)	(54.298817, -19.633632, -10.472573)	(59.079807, -17.147745, -10.822774)	N/A	A
PNL(12,9)	(54.371046, -20.000588, -10.578847)	(54.3991, -22.080987, -11.724176)	(59.034642, -21.305692, -13.018894)	(59.006588, -19.225293, -11.873566)	(54.335858, -19.907373, -10.514956)	(54.328876, -22.197797, -11.761879)	(59.103571, -21.349993, -13.068604)	(59.081766, -19.158057, -11.864743)	(54.325131, -21.921828, -11.60994)	(59.080711, -19.403858, -11.998445)	N/A	A
PNL(12,10)	(54.41133, -22.340501, -11.753321)	(54.451985, -24.355617, -13.009617)	(59.022837, -23.393449, -14.40503)	(58.982181, -21.378333, -13.148734)	(54.369186, -22.246682, -11.677335)	(54.357447, -24.485493, -13.048354)	(59.110898, -23.429209, -14.465288)	(59.082376, -21.304458, -13.146878)	(54.353837, -24.166531, -12.85073)	(59.082066, -21.58368, -13.318371)	N/A	A
PNL(12,11)	(54.463433, -24.638762, -13.046882)	(54.518978, -26.580859, -14.412825)	(59.001693, -25.394502, -15.9173)	(58.946148, -23.452405, -14.551357)	(54.404631, -24.547234, -12.953413)	(54.388296, -26.730981, -14.448516)	(59.118467, -25.41622, -15.992723)	(59.083222, -23.365485, -14.562492)	(54.385017, -26.364717, -14.194637)	(59.083951, -23.681023, -14.780126)	N/A	A
PNL(12,12)	(54.528801, -26.889208, -14.463621)	(54.601472, -28.750094, -15.937544)	(58.969806, -27.304173, -17.547699)	(58.897135, -25.443288, -16.073776)	(54.441887, -26.805988, -14.345607)	(54.421194, -28.916783, -15.953256)	(59.126257, -27.302764, -17.644042)	(59.084392, -25.333012, -16.105721)	(54.418626, -28.513035, -15.641685)	(59.086567, -25.688608, -16.38008)	N/A	A
PNL(12,13)	(54.601223, -29.066761, -15.972096)	(54.714152, -31.376633, -17.986577)	(58.870101, -28.254919, -18.484901)	(58.826054, -27.353987, -17.699182)	(54.484451, -29.010177, -15.837524)	(54.472624, -31.697441, -18.074083)	(59.111042, -28.213324, -18.630258)	(59.08679, -27.202136, -17.767209)	(54.465541, -30.590442, -17.143812)	(59.09186, -27.587218, -18.092763)	N/A	A
PNL(13,1)	(59.156788, -0.09233, -6.922294)	(59.157166, -2.466099, -6.998765)	(63.95046, -2.436717, -7.887076)	(63.950082, -0.062949, -7.810605)	(59.078423, 0, -6.904785)	(59.078971, -2.559438, -6.987262)	(64.029492, -2.498737, -7.903734)	(64.028694, 0, -7.823163)	(59.07876, -2.544198, -6.986732)	N/A	N/A	B
PNL(13,2)	(59.156726, -2.650405, -7.011838)	(59.157428, -5.014103, -7.243267)	(63.950522, -4.92598, -8.128766)	(63.94982, -2.562283, -7.897337)	(59.078722, -2.559366, -6.988378)	(59.078984, -5.108115, -7.237833)	(64.03008, -4.986794, -8.149557)	(64.029113, -2.498596, -7.905896)	(59.078361, -5.06266, -7.233269)	(64.028701, -2.536704, -7.909549)	N/A	A
PNL(13,3)	(59.156821, -5.197467, -7.267745)	(59.157981, -7.5411, -7.65246)	(63.950427, -7.394082, -8.533635)	(63.949268, -5.050448, -8.14892)	(59.078868, -5.108048, -7.23835)	(59.079013, -7.635511, -7.653032)	(64.030787, -7.453411, -8.558549)	(64.029379, -4.986274, -8.153525)	(59.077986, -7.560347, -7.640507)	(64.028716, -5.048763, -8.163652)	N/A	A
PNL(13,4)	(59.157091, -7.72289, -7.688923)	(59.158826, -10.03666, -8.224732)	(63.950158, -9.83036, -9.100067)	(63.948422, -7.51659, -8.564259)	(59.078881, -7.635398, -7.653607)	(59.079057, -10.131212, -8.231246)	(64.031594, -9.887915, -9.129076)	(64.029633, -7.452139, -8.564989)	(59.077625, -10.02711, -8.206878)	(64.028742, -7.537515, -8.584575)	N/A	A
PNL(13,5)	(59.157559, -10.216159, -8.273591)	(59.159969, -12.490457, -8.957834)	(63.94969, -12.22425, -9.825783)	(63.947279, -9.949952, -9.141541)	(59.078793, -10.130912, -8.232373)	(59.079116, -12.584909, -8.970228)	(64.032476, -12.279727, -9.858847)	(64.029874, -9.885415, -9.138485)	(59.077273, -12.452907, -8.930177)	(64.028781, -9.991636, -9.170204)	N/A	A
PNL(13,6)	(59.158275, -12.666946, -9.019207)	(59.161413, -14.89231, -9.848889)	(63.948973, -14.565283, -10.70793)	(63.945835, -12.33992, -9.878248)	(59.078666, -12.58428, -8.9721)	(59.079192, -14.986444, -9.867113)	(64.033383, -14.618365, -10.744999)	(64.030102, -12.275472, -9.871503)	(59.076926, -14.827846, -9.807564)	(64.028833, -12.400002, -9.917636)	N/A	A
PNL(13,7)	(59.159406, -15.065364, -9.922096)	(59.163163, -17.232208, -10.894411)	(63.947842, -16.842914, -11.743483)	(63.944085, -14.67607, -10.771168)	(59.078703, -14.985636, -9.869085)	(59.079309, -17.327206, -10.919064)	(64.034257, -16.893253, -11.78454)	(64.030316, -14.611874, -10.760833)	(59.076609, -17.143532, -10.836136)	(64.02889, -14.751732, -10.823234)	N/A	A
PNL(13,8)	(59.160832, -17.405404, -10.977726)	(59.165897, -19.502764, -12.092032)	(63.946416, -19.045658, -12.930671)	(63.941351, -16.948297, -11.816365)	(59.07956, -17.327681, -10.918093)	(59.079549, -19.606133, -12.127365)	(64.036333, -19.092912, -12.976089)	(64.03061, -16.884403, -11.802641)	(59.076436, -19.397227, -12.015785)	(64.028995, -17.03764, -11.883606)	N/A	A
PNL(13,9)	(59.16432, -19.703794, -12.172466)	(59.17408, -21.707113, -13.448099)	(63.942928, -21.147239, -14.290867)	(63.933168, -19.14392, -13.015234)	(59.086757, -19.621619, -12.100746)	(59.079668, -21.814748, -13.492776)	(64.040834, -21.189594, -14.342393)	(64.031471, -19.079557, -12.999036)	(59.076742, -21.576404, -13.340564)	(64.02935, -19.248013, -13.105563)	N/A	A
PNL(13,10)	(59.17286, -21.930692, -13.5254)	(59.189697, -23.825767, -14.956843)	(63.934388, -23.12441, -15.829555)	(63.917551, -21.229335, -14.398112)	(59.094485, -21.850152, -13.441639)	(59.07977, -23.940132, -15.010478)	(64.046552, -23.159232, -15.888878)	(64.031961, -21.162465, -14.381551)	(59.077304, -23.671179, -14.807302)	(64.029918, -21.34125, -14.515524)	N/A	A
PNL(13,11)	(59.188224, -24.073948, -15.039537)	(59.214694, -25.848964, -16.617271)	(63.919025, -24.961026, -17.537309)	(63.892554, -23.186011, -15.959575)	(59.101734, -23.997271, -14.940459)	(59.079776, -25.971218, -16.676392)	(64.053099, -24.984296, -17.606445)	(64.032473, -23.11286, -15.945646)	(59.078054, -25.675062, -16.414129)	(64.030729, -23.298642, -16.109143)	N/A	A
PNL(13,12)	(59.21266, -26.127346, -16.697956)	(59.2522, -27.955451, -18.596486)	(63.880847, -26.312486, -19.044364)	(63.852518, -25.002765, -17.684187)	(59.111938, -26.060577, -16.582765)	(59.083814, -28.133059, -18.701394)	(64.054961, -26.368522, -19.182413)	(64.033327, -24.915737, -17.678183)	(59.083525, -27.573058, -18.12528)	(64.032132, -25.106301, -17.873632)	N/A	A
PNL(14,1)	(64.106353, -0.087377, -7.847509)	(64.107019, -2.461302, -7.918929)	(68.920815, -2.436795, -8.6886)	(68.920149, -0.062869, -8.61718)	(64.027113, 0, -7.832202)	(64.029004, -2.549265, -7.909085)	(68.999203, -2.498849, -8.703009)	(68.998466, 0, -8.627825)	(64.028853, -2.536741, -7.908685)	N/A	N/A	A
PNL(14,2)	(64.104452, -2.633654, -7.954291)	(64.105805, -4.998644, -8.172108)	(68.922717, -4.927098, -8.919012)	(68.921363, -2.562108, -8.701195)	(64.02465, -2.547752, -7.933904)	(64.029034, -5.086272, -8.168162)	(68.999906, -4.988195, -8.936708)	(68.998659, -2.498579, -8.707441)	(64.028544, -5.04868, -8.164627)	(68.998472, -2.524792, -8.709824)	N/A	A
PNL(14,3)	(64.101899, -5.165199, -8.232127)	(64.103916, -7.512271, -8.595273)	(68.925269, -7.397947, -9.307394)	(68.923252, -5.050875, -8.944249)	(64.022141, -5.081474, -8.207111)	(64.029066, -7.598811, -8.597321)	(69.000637, -7.457958, -9.32808)	(68.998781, -4.987073, -8.945818)	(64.028197, -7.537119, -8.587653)	(68.998483, -5.03004, -8.952415)	N/A	A
PNL(14,4)	(64.098839, -7.670053, -8.679083)	(64.101429, -9.990281, -9.186192)	(68.928329, -9.839281, -9.85242)	(68.925739, -7.519053, -9.345311)	(64.019627, -7.589014, -8.64991)	(64.029098, -10.074971, -9.194211)	(69.001364, -9.898109, -9.875848)	(68.998896, -7.455364, -9.341999)	(64.027812, -9.990702, -9.17562)	(68.998502, -7.51401, -9.35475)	N/A	A
PNL(14,5)	(64.095407, -10.136455, -9.292512)	(64.098444, -12.420992, -9.941748)	(68.931761, -12.241157, -10.551938)	(68.928724, -9.95662, -9.902701)	(64.017114, -10.058546, -9.259674)	(64.029126, -12.503088, -9.955581)	(69.002079, -12.298731, -10.577909)	(68.999005, -9.893459, -9.894378)	(64.027394, -12.398277, -9.925576)	(68.998527, -9.966316, -9.915005)	N/A	A
PNL(14,6)	(64.091776, -12.552968, -10.06878)	(64.095089, -14.793018, -10.857952)	(68.935392, -14.593742, -11.403273)	(68.932079, -12.353693, -10.614101)	(64.014636, -12.478567, -10.032773)	(64.029162, -14.871828, -10.877319)	(69.002755, -14.650001, -11.431648)	(68.999107, -12.291483, -10.600719)	(64.026948, -14.748958, -10.833773)	(68.998556, -12.376728, -10.630665)	N/A	A
PNL(14,7)	(64.088215, -14.908647, -11.003124)	(64.091462, -17.094978, -11.930794)	(68.938953, -16.886888, -12.404252)	(68.935706, -14.700558, -11.476581)	(64.012293, -14.838077, -10.964395)	(64.02927, -17.171614, -11.956092)	(69.003308, -16.941821, -12.435007)	(68.999202, -14.639731, -11.45814)	(64.026449, -17.033401, -11.897144)	(68.998583, -14.73522, -11.498568)	N/A	A
PNL(14,8)	(64.085845, -17.200543, -12.081668)	(64.087866, -19.312827, -13.167428)	(68.941323, -19.099878, -13.572676)	(68.939302, -16.987594, -12.486915)	(64.012525, -17.13277, -12.039062)	(64.029498, -19.392514, -13.202191)	(69.002911, -19.153028, -13.606522)	(68.999407, -16.928703, -12.463023)	(64.025784, -19.241032, -13.123948)	(68.998564, -17.033041, -12.516556)	N/A	A
PNL(14,9)	(64.084668, -19.434977, -13.299902)	(64.086294, -21.421368, -14.601776)	(68.9425, -21.184174, -14.957619)	(68.940874, -19.197784, -13.655746)	(64.019684, -19.365941, -13.247821)	(64.029539, -21.497315, -14.645569)	(69.002905, -21.234055, -14.996666)	(69.000123, -19.142012, -13.625436)	(64.025671, -21.333892, -14.53807)	(68.99857, -19.255542, -13.69967)	N/A	A
PNL(14,10)	(64.086348, -21.564518, -14.701636)	(64.086763, -23.388217, -16.223064)	(68.94082, -23.098405, -16.569133)	(68.940405, -21.274706, -15.047705)	(64.030536, -21.500408, -14.641395)	(64.029521, -23.459902, -16.275933)	(69.001367, -23.143052, -16.61371)	(69.000468, -21.222882, -15.011746)	(64.026017, -23.289804, -16.133608)	(68.9985, -21.339758, -15.109008)	N/A	A
PNL(14,11)	(64.087252, -23.541571, -16.3186)	(64.089589, -25.201341, -18.017359)	(68.939916, -24.847646, -18.356265)	(68.937579, -23.187875, -16.657507)	(64.036249, -23.482831, -16.251123)	(64.030178, -25.264778, -18.073688)	(69.004378, -24.887114, -18.405968)	(69.000701, -23.139702, -16.617334)	(64.026875, -25.095726, -17.900222)	(68.998651, -23.256288, -16.736338)	N/A	A
PNL(14,12)	(64.09075, -25.343626, -18.116705)	(64.092564, -26.181122, -19.120607)	(68.935728, -25.541098, -19.215391)	(68.934372, -24.915314, -18.465267)	(64.038274, -25.293706, -18.047548)	(64.034663, -26.295815, -19.247743)	(69.006248, -25.63882, -19.34504)	(69.000982, -24.869339, -18.422027)	(68.999461, -24.984177, -18.559367)	N/A	N/A	A
PNL(15,1)	(69.076813, -0.079485, -8.646914)	(69.077233, -2.453479, -8.716024)	(73.921579, -2.436739, -9.261604)	(73.921159, -0.062745, -9.192494)	(68.997507, 0, -8.635662)	(68.998614, -2.533357, -8.709486)	(74.000221, -2.498934, -9.272278)	(73.999919, 0, -9.199547)	(68.998545, -2.524817, -8.70923)	N/A	N/A	A
PNL(15,2)	(69.075761, -2.610558, -8.745556)	(69.076525, -4.97614, -8.956853)	(73.922631, -4.927437, -9.484596)	(73.921867, -2.561855, -9.273299)	(68.996119, -2.532155, -8.729811)	(68.998625, -5.05567, -8.955401)	(74.000472, -4.988915, -9.498632)	(73.999556, -2.4987, -9.276234)	(68.998401, -5.029983, -8.953083)	(73.999918, -2.508491, -9.277104)	N/A	A
PNL(15,3)	(69.074334, -5.128627, -9.006944)	(69.075421, -7.477309, -9.359527)	(73.924058, -7.399952, -9.859887)	(73.922971, -5.05127, -9.507304)	(68.994712, -5.051889, -8.987021)	(68.998636, -7.55589, -9.363212)	(74.000733, -7.46056, -9.877078)	(73.999979, -4.98804, -9.505946)	(68.998242, -7.513742, -9.356846)	(73.999918, -5.004038, -9.50834)	N/A	A
PNL(15,4)	(69.072616, -7.622832, -9.429516)	(69.073973, -9.946183, -9.922124)	(73.925776, -9.844951, -10.386213)	(73.92442, -7.5216, -9.893605)	(68.993302, -7.548196, -9.405758)	(68.998645, -10.023208, -9.930912)	(74.000994, -9.90456, -10.406376)	(74.000001, -7.458618, -9.887818)	(68.998069, -9.965688, -9.918662)	(73.99992, -7.480353, -9.892417)	N/A	A
PNL(15,5)	(69.070693, -10.082465, -10.011073)	(69.072251, -12.372141, -10.641951)	(73.927699, -12.253212, -11.061597)	(73.926142, -9.963537, -10.430719)	(68.991886, -10.010317, -9.983855)	(68.998652, -12.447012, -10.655718)	(74.001254, -12.311714, -11.084566)	(74.000021, -9.901141, -10.420415)	(68.997884, -12.375583, -10.63597)	(73.999922, -9.927973, -10.427797)	N/A	A
PNL(15,6)	(69.068679, -12.49707, -10.74855)	(69.070343, -14.744805, -11.515564)	(73.929714, -14.615616, -11.883608)	(73.928049, -12.367881, -11.116594)	(68.990479, -12.427747, -10.718267)	(68.99866, -14.816947, -11.534098)	(74.001506, -14.672914, -11.909245)	(74.000039, -12.306426, -11.101732)	(68.997689, -14.733404, -11.505513)	(73.999924, -12.337561, -11.112345)	N/A	A
PNL(15,7)	(69.066715, -14.856324, -11.638527)	(69.068308, -17.053601, -12.539968)	(73.931677, -16.922852, -12.850076)	(73.930084, -14.725575, -11.948635)	(68.989051, -14.790128, -11.605565)	(68.998713, -17.123898, -12.563598)	(74.001704, -16.978877, -12.878294)	(74.000055, -14.665426, -11.929195)	(68.997438, -17.030372, -12.525139)	(73.999926, -14.699941, -11.943344)	N/A	A
PNL(15,8)	(69.065153, -17.153854, -12.674933)	(69.066256, -19.280949, -13.731384)	(73.93324, -19.154625, -13.980649)	(73.932137, -17.027529, -12.924197)	(68.988276, -17.090069, -12.638327)	(68.998857, -19.352821, -13.762757)	(74.001616, -19.208984, -14.012029)	(74.000101, -16.969231, -12.899602)	(68.996902, -19.25089, -13.71201)	(73.999927, -17.006487, -12.918093)	N/A	A
PNL(15,9)	(69.064006, -19.383871, -13.864449)	(69.065063, -21.377712, -15.154884)	(73.934387, -21.248109, -15.35114)	(73.933329, -19.254269, -14.060705)	(68.990426, -19.32063, -13.819287)	(68.998883, -21.444482, -15.194289)	(74.001876, -21.299241, -15.388115)	(74.000266, -19.199321, -14.028995)	(68.996615, -21.335102, -15.12337)	(73.999931, -19.238799, -14.054525)	N/A	A
PNL(15,10)	(69.064019, -21.482866, -15.271785)	(69.064612, -23.301506, -16.799258)	(73.934374, -23.155264, -16.971484)	(73.93378, -21.336624, -15.444011)	(68.994638, -21.425761, -15.21962)	(68.998893, -23.362868, -16.846813)	(74.001335, -23.201578, -17.014439)	(74.000333, -21.286231, -15.405719)	(68.996502, -23.250545, -16.75233)	(73.999929, -21.325246, -15.438462)	N/A	A
PNL(15,11)	(69.064969, -23.423822, -16.895377)	(69.065015, -25.037012, -18.638433)	(73.933424, -24.850962, -18.810492)	(73.933378, -23.237772, -17.067436)	(69.001032, -23.37329, -16.835877)	(69.000141, -25.088911, -18.689538)	(74.000486, -24.890901, -18.858785)	(74.000384, -23.192646, -17.023812)	(68.997833, -24.97951, -18.571153)	(73.999922, -23.229126, -17.063194)	N/A	A
PNL(15,12)	(69.065281, -25.139622, -18.741796)	(69.065307, -25.521381, -19.223831)	(73.933098, -25.228615, -19.280858)	(73.933078, -24.93182, -18.906104)	(69.001755, -25.097094, -18.682528)	(69.004226, -25.628571, -19.353821)	(74.002195, -25.327976, -19.412374)	(74.000411, -24.890168, -18.859414)	(74.000096, -24.924381, -18.902586)	N/A	N/A	A
PNL(16,1)	(74.078842, -0.068737, -9.209822)	(74.078961, -2.44275, -9.278272)	(78.94963, -2.436587, -9.483614)	(78.949512, -0.062573, -9.415164)	(73.999588, 0, -9.204496)	(73.99995, -2.511634, -9.276924)	(79.028551, -2.498973, -9.488742)	(79.028551, 0, -9.416695)	(73.999936, -2.508502, -9.276833)	N/A	N/A	A
PNL(16,2)	(74.078659, -2.579193, -9.297071)	(74.078826, -4.944943, -9.506473)	(78.949814, -4.927166, -9.70342)	(78.949646, -2.561416, -9.494017)	(73.999221, -2.510997, -9.287797)	(73.99995, -5.013505, -9.509327)	(79.028551, -4.989152, -9.712115)	(79.028551, -2.4988, -9.491691)	(73.999909, -5.004026, -9.508486)	(79.028551, -4.989116, -9.712112)	(79.028551, -2.498873, -9.491697)	A
PNL(16,3)	(74.078409, -5.078834, -9.538626)	(74.078616, -7.427957, -9.888265)	(78.950063, -7.40014, -10.072276)	(78.949856, -5.051017, -9.722637)	(73.998855, -5.011582, -9.525544)	(73.999951, -7.495808, -9.895325)	(79.028551, -7.46153, -10.084444)	(79.028551, -4.988644, -9.716393)	(73.99988, -7.480277, -9.893011)	(79.028551, -4.988752, -9.716409)	(79.028551, -4.498873, -9.491697)	A
PNL(16,4)	(74.078113, -7.557979, -9.933335)	(74.078345, -9.882149, -10.422068)	(78.950359, -9.846575, -10.588927)	(78.950127, -7.522405, -10.100194)	(73.998495, -7.49199, -9.91661)	(73.99995, -9.948901, -10.433299)	(79.028551, -9.907187, -10.60447)	(79.028551, -7.460535, -10.08999)	(73.999849, -9.927792, -10.428857)	(79.028551, -9.906904, -10.604411)	(79.028551, -7.460675, -10.09002)	A
PNL(16,5)	(74.07779, -10.007048, -10.479493)	(74.078031, -12.298014, -11.105671)	(78.950682, -12.257641, -11.251502)	(78.950441, -9.966675, -10.625324)	(73.998141, -9.942616, -10.459318)	(73.99995, -12.363283, -11.120997)	(79.028551, -12.317306, -11.270317)	(79.028551, -9.905576, -10.611139)	(73.999819, -12.337233, -11.113872)	(79.028551, -12.316852, -11.270193)	(79.028551, -9.905747, -10.611186)	A
PNL(16,6)	(74.077467, -12.416647, -11.17465)	(74.077697, -14.666224, -11.936246)	(78.951006, -14.624598, -12.057726)	(78.950775, -12.375021, -11.29613)	(73.997799, -12.35404, -11.151238)	(73.999948, -14.729644, -11.955554)	(79.028551, -14.683157, -12.079708)	(79.028551, -12.314969, -11.277963)	(73.999788, -14.699426, -11.945319)	(79.028551, -14.682518, -12.079492)	(79.028551, -12.315167, -11.27803)	A
PNL(16,7)	(74.07719, -14.777795, -12.015278)	(74.077362, -16.977428, -12.910954)	(78.951282, -16.938397, -13.005873)	(78.95111, -14.738763, -12.110197)	(73.997517, -14.717255, -11.988815)	(73.99995, -17.038913, -12.93423)	(79.028551, -16.995625, -13.030933)	(79.028551, -14.68005, -12.08805)	(73.999742, -17.005681, -12.920693)	(79.028551, -16.994991, -13.030675)	(79.028551, -14.680268, -12.088139)	A
PNL(16,8)	(74.076823, -17.077381, -13.008251)	(74.077063, -19.212627, -14.04813)	(78.951649, -19.184367, -14.105035)	(78.951409, -17.04912, -13.065157)	(73.996585, -17.019063, -12.978687)	(73.999977, -19.272934, -14.076382)	(79.028551, -19.240475, -14.133476)	(79.028551, -16.992218, -13.038563)	(73.999606, -19.237139, -14.058945)	(79.028551, -19.238615, -14.13257)	(79.028551, -16.992507, -13.038704)	A
PNL(16,9)	(74.076849, -19.314086, -14.138129)	(74.076904, -21.305104, -15.432915)	(78.951623, -21.276461, -15.476752)	(78.951568, -19.285442, -14.181966)	(73.997968, -19.258881, -14.101218)	(73.999964, -21.360718, -15.468095)	(79.028551, -21.328472, -15.511561)	(79.028551, -19.232106, -14.148267)	(73.999542, -21.323495, -15.443883)	(79.028551, -21.327236, -15.510757)	(79.028551, -19.232604, -14.148592)	A
PNL(16,10)	(74.076822, -21.401406, -15.523085)	(74.076838, -23.213451, -17.058376)	(78.951653, -23.185758, -17.091008)	(78.951634, -21.373713, -15.555717)	(73.998863, -21.351764, -15.480128)	(73.999959, -23.263702, -17.100067)	(79.028551, -23.233042, -17.131955)	(79.028551, -21.32541, -15.515676)	(73.999497, -23.227046, -17.069004)	(79.028551, -23.232451, -17.131454)	(79.028551, -21.325597, -15.515834)	A
PNL(16,11)	(74.076801, -23.305101, -17.150952)	(74.076848, -24.913994, -18.897975)	(78.951671, -24.883428, -18.925994)	(78.951625, -23.274536, -17.178971)	(73.999698, -23.26137, -17.102498)	(74.000284, -24.95805, -18.944853)	(79.028551, -24.925369, -18.972501)	(79.028551, -23.231668, -17.133388)	(73.999796, -24.922805, -18.906576)	(79.028551, -24.923516, -18.970489)	(79.028551, -23.231733, -17.13346)	A
PNL(16,12)	(74.076843, -24.99756, -18.995672)	(74.076853, -25.223574, -19.281985)	(78.951624, -25.16987, -19.289961)	(78.951615, -24.96051, -19.024747)	(74.000305, -24.95825, -18.944682)	(74.002159, -25.327666, -19.412683)	(79.028551, -25.272292, -19.420908)	(79.028551, -24.921157, -18.976094)	(79.028551, -24.921255, -18.976218)	N/A	N/A	A

1	2	3	4	5	6	7	8	9	10	11	12	13	14	15	16	17	18	19	20		

DESIGN BY:																					
DRAWN BY:		4	7/3/2023	ISSUED FOR BID																	
CHECKED BY:																					
APPROVED BY:		0	9/9/2022	ISSUED FOR PERMIT	MN	ZT	SD														
CDOT/APPROVED BY:		NO.	DATE	REVISIONS	DES.	DRW.	CHK.	DCCO	CDOT												

TRANSYSTEMS
222 SOUTH RIVERSIDE PLAZA SUITE 610
CHICAGO, ILLINOIS 60606

SKIDMORE, OWINGS & MERRILL LLP
224 SOUTH MICHIGAN AVENUE, SUITE 1000
CHICAGO, ILLINOIS 60604

CHICAGO DEPARTMENT OF TRANSPORTATION
DIVISION OF ENGINEERING

STATE / LAKE LOOP ELEVATED STATION
200 NORTH STATE STREET, CHICAGO, IL 60601

SPEC. NO.

DOME GLAZING UNIT GEOMETRY CHART

DRAWING NO. A-505

CDOT PROJECT D-1-209 | DATE: 9/9/2022 | REVISION NO.

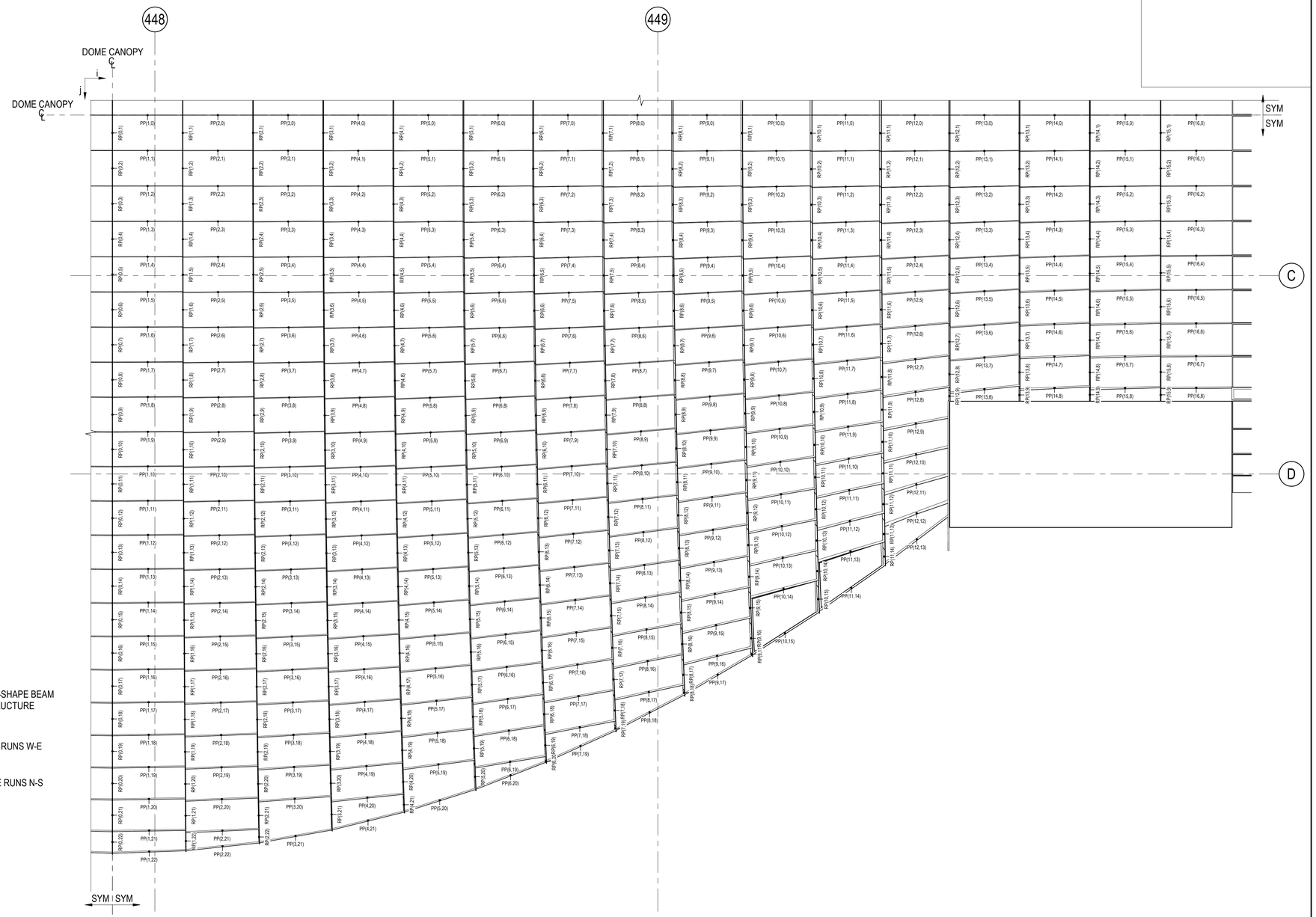

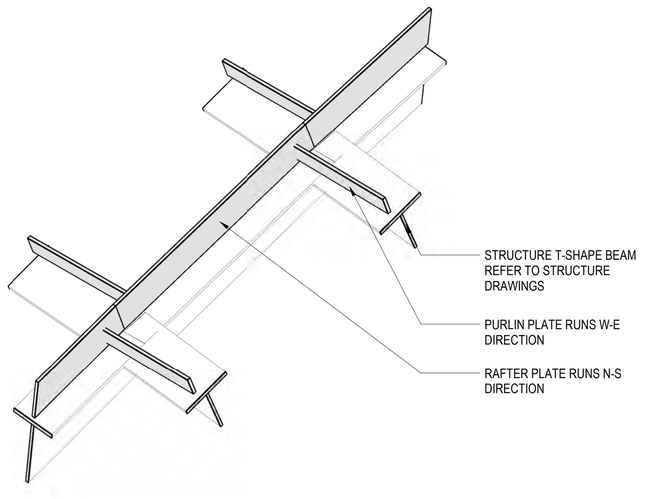

2 ISOMETRIC - DOME RAFTER AND PURLIN

1 KEY PLAN - DOME RAFTER PLATE & PURLIN PLATE

1/4" = 1'-0"

DESIGN BY:									
DRAWN BY:		4	7/3/2023	ISSUED FOR BID					
CHECKED BY:									
APPROVED BY:		0	9/9/2022	ISSUED FOR PERMIT	MN	ZT	SD		
CDOT/APPROVED BY:		NO.	DATE	REVISIONS	DES.	DRW.	CHK.	DCCO	CDOT

TRANSYSTEMS
222 SOUTH RIVERSIDE PLAZA SUITE 610
CHICAGO, ILLINOIS 60606

SKIDMORE, OWINGS & MERRILL LLP
224 SOUTH MICHIGAN AVENUE, SUITE 1000
CHICAGO, ILLINOIS 60604

CHICAGO DEPARTMENT
OF TRANSPORTATION
DIVISION OF ENGINEERING

STATE / LAKE LOOP ELEVATED STATION
200 NORTH STATE STREET, CHICAGO, IL 60601

SPEC. NO.

DOME ENCLOSURE GEOMETRY - RAFTER & PURLIN

DRAWING NO.
A-506

CDOT PROJECT D-1-209

DATE: 9/9/2022

REVISION NO.

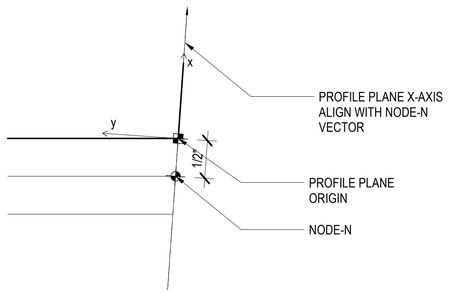

3 GEOMETRY - EDGE RAFTER PROFILE PLANE

12" = 1'-0"

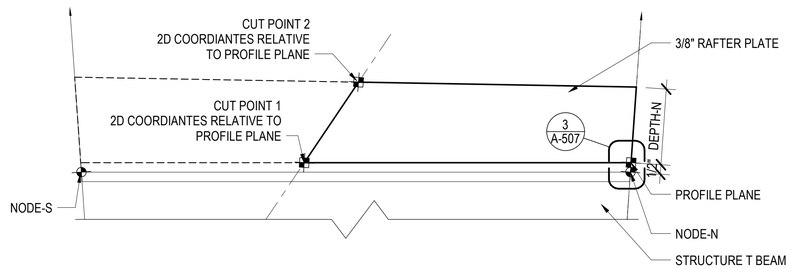

2 GEOMETRY - DOME RAFTER PLATE PROFILE - EDGE

3" = 1'-0"

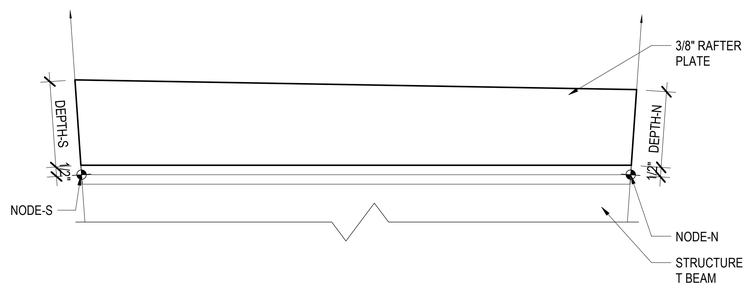

1 GEOMETRY - DOME RAFTER PLATE PROFILE - TYP

3" = 1'-0"

DOME RAFTER GEOMETRY - EDGE

NAME	NODE_N	NODE_S	DEPTH_N(ft)	CutPoint1(ft)	CutPoint2(ft)
RP(0,22)	(1,22)	(1,23)	0.341435	(-1.781270, 0.010614)	(-1.778004, 0.352237)
RP(1,22)	(2,22)	(2,23)	0.34179	(-1.538425, 0.005398)	(-1.536541, 0.347360)
RP(2,22)	(3,22)	(3,23)	0.342686	(-0.932135, -0.001226)	(-0.929771, 0.341572)
RP(3,21)	(4,21)	(4,22)	0.342082	(-2.478725, -0.010122)	(-2.481985, 0.333838)
RP(4,21)	(5,21)	(5,22)	0.343936	(-1.173417, -0.022132)	(-1.178785, 0.322619)
RP(5,20)	(6,20)	(6,21)	0.345554	(-2.052868, -0.034395)	(-2.062530, 0.311360)
RP(6,20)	(7,20)	(7,21)	0.348151	(-0.121579, -0.004047)	(-0.136112, 0.343644)
RP(7,19)	(8,19)	(8,20)	0.350014	(-0.400148, -0.017462)	(-0.419301, 0.331876)
RP(8,18)	(9,18)	(9,19)	0.352896	(-0.411392, -0.022520)	(-0.437104, 0.329017)
RP(9,17)	(10,17)	(10,18)	0.35423	(-0.161197, -0.014382)	(-0.196506, 0.336924)
RP(10,15)	(11,15)	(11,16)	0.361031	(-2.188814, -0.170599)	(-2.224049, 0.184783)
RP(11,14)	(12,14)	(12,15)	0.375	(-1.414103, -0.110006)	(-1.448696, 0.256323)
RP(12,9)	(13,9)	(13,10)	0.331878	(-1.028334, -0.185110)	(-0.896032, 0.173273)
RP(13,9)	(14,9)	(14,10)	0.325184	(-1.229404, -0.289777)	(-1.095797, 0.070795)
RP(14,9)	(15,9)	(15,10)	0.321209	(-1.218333, -0.293739)	(-1.086132, 0.063362)
RP(15,9)	(16,9)	(16,10)	0.318803	(-1.232433, -0.289063)	(-1.101475, 0.064584)

NOTE:
REFER TO S-623 FOR NODE_N & NODE_S VALUES

DOME RAFTER GEOMETRY - TYP

NAME	NODE_N	NODE_S	DEPTH_N(ft)	DEPTH_S(ft)
RP(0,1)	(1,1)	(1,2)	0.260417	0.267133
RP(0,2)	(1,2)	(1,3)	0.267133	0.273849
RP(0,3)	(1,3)	(1,4)	0.273849	0.280565
RP(0,4)	(1,4)	(1,5)	0.280565	0.287281
RP(0,5)	(1,5)	(1,6)	0.287281	0.293996
RP(0,6)	(1,6)	(1,7)	0.293996	0.300712
RP(0,7)	(1,7)	(1,8)	0.300712	0.307835
RP(0,8)	(1,8)	(1,9)	0.307835	0.317327
RP(0,9)	(1,9)	(1,10)	0.317327	0.323449
RP(0,10)	(1,10)	(1,11)	0.323449	0.330327
RP(0,11)	(1,11)	(1,12)	0.330327	0.337068
RP(0,12)	(1,12)	(1,13)	0.337068	0.343362
RP(0,13)	(1,13)	(1,14)	0.343362	0.348196
RP(0,14)	(1,14)	(1,15)	0.348196	0.339097
RP(0,15)	(1,15)	(1,16)	0.339097	0.336081
RP(0,16)	(1,16)	(1,17)	0.336081	0.335145
RP(0,17)	(1,17)	(1,18)	0.335145	0.337819
RP(0,18)	(1,18)	(1,19)	0.337819	0.338097
RP(0,19)	(1,19)	(1,20)	0.338097	0.339043
RP(0,20)	(1,20)	(1,21)	0.339043	0.33949
RP(0,21)	(1,21)	(1,22)	0.33949	0.341435
RP(1,1)	(2,1)	(2,2)	0.266957	0.269795
RP(1,2)	(2,2)	(2,3)	0.269795	0.275365
RP(1,3)	(2,3)	(2,4)	0.275365	0.281612
RP(1,4)	(2,4)	(2,5)	0.281612	0.288082
RP(1,5)	(2,5)	(2,6)	0.288082	0.294647
RP(1,6)	(2,6)	(2,7)	0.294647	0.301263
RP(1,7)	(2,7)	(2,8)	0.301263	0.308311
RP(1,8)	(2,8)	(2,9)	0.308311	0.317734
RP(1,9)	(2,9)	(2,10)	0.317734	0.323823
RP(1,10)	(2,10)	(2,11)	0.323823	0.330672
RP(1,11)	(2,11)	(2,12)	0.330672	0.33739
RP(1,12)	(2,12)	(2,13)	0.33739	0.343667
RP(1,13)	(2,13)	(2,14)	0.343667	0.348493
RP(1,14)	(2,14)	(2,15)	0.348493	0.339424
RP(1,15)	(2,15)	(2,16)	0.339424	0.336422
RP(1,16)	(2,16)	(2,17)	0.336422	0.335493
RP(1,17)	(2,17)	(2,18)	0.335493	0.338164
RP(1,18)	(2,18)	(2,19)	0.338164	0.338447
RP(1,19)	(2,19)	(2,20)	0.338447	0.339394
RP(1,20)	(2,20)	(2,21)	0.339394	0.339845
RP(1,21)	(2,21)	(2,22)	0.339845	0.34179
RP(2,1)	(3,1)	(3,2)	0.273416	0.275054
RP(2,2)	(3,2)	(3,3)	0.275054	0.279124
RP(2,3)	(3,3)	(3,4)	0.279124	0.284418
RP(2,4)	(3,4)	(3,5)	0.284418	0.290294
RP(2,5)	(3,5)	(3,6)	0.290294	0.296468
RP(2,6)	(3,6)	(3,7)	0.296468	0.302809
RP(2,7)	(3,7)	(3,8)	0.302809	0.309646
RP(2,8)	(3,8)	(3,9)	0.309646	0.318865
RP(2,9)	(3,9)	(3,10)	0.318865	0.324857
RP(2,10)	(3,10)	(3,11)	0.324857	0.331618
RP(2,11)	(3,11)	(3,12)	0.331618	0.338266
RP(2,12)	(3,12)	(3,13)	0.338266	0.344491
RP(2,13)	(3,13)	(3,14)	0.344491	0.349284
RP(2,14)	(3,14)	(3,15)	0.349284	0.340295
RP(2,15)	(3,15)	(3,16)	0.340295	0.337324
RP(2,16)	(3,16)	(3,17)	0.337324	0.336409
RP(2,17)	(3,17)	(3,18)	0.336409	0.339065
RP(2,18)	(3,18)	(3,19)	0.339065	0.33935
RP(2,19)	(3,19)	(3,20)	0.33935	0.340297
RP(2,20)	(3,20)	(3,21)	0.340297	0.340749
RP(2,21)	(3,21)	(3,22)	0.340749	0.342686

DOME RAFTER GEOMETRY - TYP

NAME	NODE_N	NODE_S	DEPTH_N(ft)	DEPTH_S(ft)
RP(3,1)	(4,1)	(4,2)	0.279433	0.28059
RP(3,2)	(4,2)	(4,3)	0.28059	0.283717
RP(3,3)	(4,3)	(4,4)	0.283717	0.288156
RP(3,4)	(4,4)	(4,5)	0.288156	0.293381
RP(3,5)	(4,5)	(4,6)	0.293381	0.299074
RP(3,6)	(4,6)	(4,7)	0.299074	0.305059
RP(3,7)	(4,7)	(4,8)	0.305059	0.311609
RP(3,8)	(4,8)	(4,9)	0.311609	0.320544
RP(3,9)	(4,9)	(4,10)	0.320544	0.326396
RP(3,10)	(4,10)	(4,11)	0.326396	0.33303
RP(3,11)	(4,11)	(4,12)	0.33303	0.339577
RP(3,12)	(4,12)	(4,13)	0.339577	0.345724
RP(3,13)	(4,13)	(4,14)	0.345724	0.35047
RP(3,14)	(4,14)	(4,15)	0.35047	0.341593
RP(3,15)	(4,15)	(4,16)	0.341593	0.338665
RP(3,16)	(4,16)	(4,17)	0.338665	0.337767
RP(3,17)	(4,17)	(4,18)	0.337767	0.340399
RP(3,18)	(4,18)	(4,19)	0.340399	0.340687
RP(3,19)	(4,19)	(4,20)	0.340687	0.341629
RP(3,20)	(4,20)	(4,21)	0.341629	0.342082
RP(4,1)	(5,1)	(5,2)	0.285657	0.286543
RP(4,2)	(5,2)	(5,3)	0.286543	0.289033
RP(4,3)	(5,3)	(5,4)	0.289033	0.292758
RP(4,4)	(5,4)	(5,5)	0.292758	0.297348
RP(4,5)	(5,5)	(5,6)	0.297348	0.302522
RP(4,6)	(5,6)	(5,7)	0.302522	0.308091
RP(4,7)	(5,7)	(5,8)	0.308091	0.314292
RP(4,8)	(5,8)	(5,9)	0.314292	0.322867
RP(4,9)	(5,9)	(5,10)	0.322867	0.328539
RP(4,10)	(5,10)	(5,11)	0.328539	0.335005
RP(4,11)	(5,11)	(5,12)	0.335005	0.341418
RP(4,12)	(5,12)	(5,13)	0.341418	0.347463
RP(4,13)	(5,13)	(5,14)	0.347463	0.352145
RP(4,14)	(5,14)	(5,15)	0.352145	0.343415
RP(4,15)	(5,15)	(5,16)	0.343415	0.340542
RP(4,16)	(5,16)	(5,17)	0.340542	0.339665
RP(4,17)	(5,17)	(5,18)	0.339665	0.342265
RP(4,18)	(5,18)	(5,19)	0.342265	0.342555
RP(4,19)	(5,19)	(5,20)	0.342555	0.343491
RP(4,20)	(5,20)	(5,21)	0.343491	0.343936
RP(5,1)	(6,1)	(6,2)	0.291182	0.291915
RP(5,2)	(6,2)	(6,3)	0.291915	0.294016
RP(5,3)	(6,3)	(6,4)	0.294016	0.297252
RP(5,4)	(6,4)	(6,5)	0.297252	0.301355
RP(5,5)	(6,5)	(6,6)	0.301355	0.306095
RP(5,6)	(6,6)	(6,7)	0.306095	0.311295
RP(5,7)	(6,7)	(6,8)	0.311295	0.317172
RP(5,8)	(6,8)	(6,9)	0.317172	0.3254
RP(5,9)	(6,9)	(6,10)	0.3254	0.330894
RP(5,10)	(6,10)	(6,11)	0.330894	0.337193
RP(5,11)	(6,11)	(6,12)	0.337193	0.343471
RP(5,12)	(6,12)	(6,13)	0.343471	0.349411
RP(5,13)	(6,13)	(6,14)	0.349411	0.354028
RP(5,14)	(6,14)	(6,15)	0.354028	0.345446
RP(5,15)	(6,15)	(6,16)	0.345446	0.342629
RP(5,16)	(6,16)	(6,17)	0.342629	0.341771
RP(5,17)	(6,17)	(6,18)	0.341771	0.34434
RP(5,18)	(6,18)	(6,19)	0.34434	0.34463
RP(5,19)	(6,19)	(6,20)	0.34463	0.345554
RP(6,1)	(7,1)	(7,2)	0.297106	0.297727
RP(6,2)	(7,2)	(7,3)	0.297727	0.299526
RP(6,3)	(7,3)	(7,4)	0.299526	0.302354
RP(6,4)	(7,4)	(7,5)	0.302354	0.306021

DOME RAFTER GEOMETRY - TYP

NAME	NODE_N	NODE_S	DEPTH_N(ft)	DEPTH_S(ft)
RP(6,5)	(7,5)	(7,6)	0.306021	0.310345
RP(6,6)	(7,6)	(7,7)	0.310345	0.315174
RP(6,7)	(7,7)	(7,8)	0.315174	0.32071
RP(6,8)	(7,8)	(7,9)	0.32071	0.32856
RP(6,9)	(7,9)	(7,10)	0.32856	0.333855
RP(6,10)	(7,10)	(7,11)	0.333855	0.339964
RP(6,11)	(7,11)	(7,12)	0.339964	0.346086
RP(6,12)	(7,12)	(7,13)	0.346086	0.351906
RP(6,13)	(7,13)	(7,14)	0.351906	0.356448
RP(6,14)	(7,14)	(7,15)	0.356448	0.348037
RP(6,15)	(7,15)	(7,16)	0.348037	0.34528
RP(6,16)	(7,16)	(7,17)	0.34528	0.344444
RP(6,17)	(7,17)	(7,18)	0.344444	0.346975
RP(6,18)	(7,18)	(7,19)	0.346975	0.347262
RP(6,19)	(7,19)	(7,20)	0.347262	0.348151
RP(7,1)	(8,1)	(8,2)	0.302498	0.303045
RP(7,2)	(8,2)	(8,3)	0.303045	0.304641
RP(7,3)	(8,3)	(8,4)	0.304641	0.307181
RP(7,4)	(8,4)	(8,5)	0.307181	0.310523
RP(7,5)	(8,5)	(8,6)	0.310523	0.314523
RP(7,6)	(8,6)	(8,7)	0.314523	0.319049
RP(7,7)	(8,7)	(8,8)	0.319049	0.324299
RP(7,8)	(8,8)	(8,9)	0.324299	0.331822
RP(7,9)	(8,9)	(8,10)	0.331822	0.336939
RP(7,10)	(8,10)	(8,11)	0.336939	0.342876
RP(7,11)	(8,11)	(8,12)	0.342876	0.348857
RP(7,12)	(8,12)	(8,13)	0.348857	0.354567
RP(7,13)	(8,13)	(8,14)	0.354567	0.359041
RP(7,14)	(8,14)	(8,15)	0.359041	0.350784
RP(7,15)	(8,15)	(8,16)	0.350784	0.348081
RP(7,16)	(8,16)	(8,17)	0.348081	0.347262
RP(7,17)	(8,17)	(8,18)	0.347262	0.349758
RP(7,18)	(8,18)	(8,19)	0.349758	0.350014
RP(8,1)	(9,1)	(9,2)	0.307957	0.308447
RP(8,2)	(9,2)	(9,3)	0.308447	0.309886
RP(8,3)	(9,3)	(9,4)	0.309886	0.312196
RP(8,4)	(9,4)	(9,5)	0.312196	0.315269
RP(8,5)	(9,5)	(9,6)	0.315269	0.318991
RP(8,6)	(9,6)	(9,7)	0.318991	0.323251
RP(8,7)	(9,7)	(9,8)	0.323251	0.328243
RP(8,8)	(9,8)	(9,9)	0.328243	0.335462
RP(8,9)	(9,9)	(9,10)	0.335462	0.34041
RP(8,10)	(9,10)	(9,11)	0.34041	0.346183
RP(8,11)	(9,11)	(9,12)	0.346183	0.352027
RP(8,12)	(9,12)	(9,13)	0.352027	0.357631
RP(8,13)	(9,13)	(9,14)	0.357631	0.36204
RP(8,14)	(9,14)	(9,15)	0.36204	0.353929
RP(8,15)	(9,15)	(9,16)	0.353929	0.351274
RP(8,16)	(9,16)	(9,17)	0.351274	0.350464
RP(8,17)	(9,17)	(9,18)	0.350464	0.352896
RP(9,1)	(10,1)	(10,2)	0.31385	0.314295
RP(9,2)	(10,2)	(10,3)	0.314295	0.315602
RP(9,3)	(10,3)	(10,4)	0.315602	0.317716
RP(9,4)	(10,4)	(10,5)	0.317716	0.320556
RP(9,5)	(10,5)	(10,6)	0.320556	0.324028
RP(9,6)	(10,6)	(10,7)	0.324028	0.328043
RP(9,7)	(10,7)	(10,8)	0.328043	0.332792
RP(9,8)	(10,8)	(10,9)	0.332792	0.339719
RP(9,9)	(10,9)	(10,10)	0.339719	0.344502
RP(9,10)	(10,10)	(10,11)	0.344502	0.350113
RP(9,11)	(10,11)	(10,12)	0.350113	0.355823
RP(9,12)	(10,12)	(10,13)	0.355823	0.361324
RP(9,13)	(10,13)	(10,14)	0.361324	0.365675

DOME RAFTER GEOMETRY - TYP

NAME	NODE_N	NODE_S	DEPTH_N(ft)	DEPTH_S(ft)
RP(9,14)	(10,14)	(10,15)	0.365675	0.357699
RP(9,15)	(10,15)	(10,16)	0.357699	0.355074
RP(9,16)	(10,16)	(10,17)	0.355074	0.35423
RP(10,1)	(11,1)	(11,2)	0.31845	0.318868
RP(10,2)	(11,2)	(11,3)	0.318868	0.320099
RP(10,3)	(11,3)	(11,4)	0.320099	0.322098
RP(10,4)	(11,4)	(11,5)	0.322098	0.324797
RP(10,5)	(11,5)	(11,6)	0.324797	0.328119
RP(10,6)	(11,6)	(11,7)	0.328119	0.331984
RP(10,7)	(11,7)	(11,8)	0.331984	0.336586
RP(10,8)	(11,8)	(11,9)	0.336586	0.343336
RP(10,9)	(11,9)	(11,10)	0.343336	0.348022
RP(10,10)	(11,10)	(11,11)	0.348022	0.353541
RP(10,11)	(11,11)	(11,12)	0.353541	0.359182
RP(10,12)	(11,12)	(11,13)	0.359182	0.36464
RP(10,13)	(11,13)	(11,14)	0.36464	0.368975
RP(10,14)	(11,14)	(11,15)	0.368975	0.361031
RP(11,1)	(12,1)	(12,2)	0.326458	0.326837
RP(11,2)	(12,2)	(12,3)	0.326837	0.327956
RP(11,3)	(12,3)	(12,4)	0.327956	0.329782
RP(11,4)	(12,4)	(12,5)	0.329782	0.332267
RP(11,5)	(12,5)	(12,6)	0.332267	0.335352
RP(11,6)	(12,6)	(12,7)	0.335352	0.338974
RP(11,7)	(12,7)	(12,8)	0.338974	0.343328
RP(11,8)	(12,8)	(12,9)	0.343328	0.349787
RP(11,9)	(12,9)	(12,10)	0.349787	0.354319
RP(11,10)	(12,10)	(12,11)	0.354319	0.359704
RP(11,11)	(12,11)	(12,12)	0.359704	0.365261
RP(11,12)	(12,12)	(12,13)	0.365261	0.370692
RP(11,13)	(12,13)	(12,14)	0.370692	0.375
RP(12,1)	(13,1)	(13,2)	0.300841	0.301426
RP(12,2)	(13,2)	(13,3)	0.301426	0.303129
RP(12,3)	(13,3)	(13,4)	0.303129	0.305833
RP(12,4)	(13,4)	(13,5)	0.305833	0.309382
RP(12,5)	(13,5)	(13,6)	0.309382	0.313624
RP(12,6)	(13,6)	(13,7)	0.313624	0.318422
RP(12,7)	(13,7)	(13,8)	0.318422	0.323982
RP(12,8)	(13,8)	(13,9)	0.323982	0.331878
RP(13,1)	(14,1)	(14,2)	0.288676	0.289486
RP(13,2)	(14,2)	(14,3)	0.289486	0.291784
RP(13,3)	(14,3)	(14,4)	0.291784	0.29529
RP(13,4)	(14,4)	(14,5)	0.29529	0.299697
RP(13,5)	(14,5)	(14,6)	0.299697	0.304757
RP(13,6)	(14,6)	(14,7)	0.304757	0.310294
RP(13,7)	(14,7)	(14,8)	0.310294	0.316536
RP(13,8)	(14,8)	(14,9)	0.316536	0.325184
RP(14,1)	(15,1)	(15,2)	0.279461	0.280623
RP(14,2)	(15,2)	(15,3)	0.280623	0.283755
RP(14,3)	(15,3)	(15,4)	0.283755	0.288213
RP(14,4)	(15,4)	(15,5)	0.288213	0.293482
RP(14,5)	(15,5)	(15,6)	0.293482	0.299255
RP(14,6)	(15,6)	(15,7)	0.299255	0.305363
RP(14,7)	(15,7)	(15,8)	0.305363	0.312079
RP(14,8)	(15,8)	(15,9)	0.312079	0.321209
RP(15,1)	(16,1)	(16,2)	0.270676	0.272688
RP(15,2)	(16,2)	(16,3)	0.272688	0.277325
RP(15,3)	(16,3)	(16,4)	0.277325	0.283041
RP(15,4)	(16,4)	(16,5)	0.283041	0.289222
RP(15,5)	(16,5)	(16,6)	0.289222	0.295646
RP(15,6)	(16,6)	(16,7)	0.295646	0.302226
RP(15,7)	(16,7)	(16,8)	0.302226	0.309313
RP(15,8)	(16,8)	(16,9)	0.309313	0.318803

DESIGN BY:										
DRAWN BY:		4	7/3/2023	ISSUED FOR BID						
CHECKED BY:										
APPROVED BY:		0	9/9/2022	ISSUED FOR PERMIT	MN	ZT	SD			
CDOT/APPROVED BY:		NO.	DATE	REVISIONS	DES.	DRW.	CHK.	DCCO	CDOT	

TRANSYSTEMS
222 SOUTH RIVERSIDE PLAZA SUITE 610
CHICAGO, ILLINOIS 60606

SKIDMORE, OWINGS & MERRILL LLP
224 SOUTH MICHIGAN AVENUE, SUITE 1000
CHICAGO, ILLINOIS 60604

CHICAGO DEPARTMENT
OF TRANSPORTATION
DIVISION OF ENGINEERING

STATE / LAKE LOOP ELEVATED STATION
200 NORTH STATE STREET, CHICAGO, IL 60601

SPEC. NO.

DOME RAFTER GEOMETRY CHART

DRAWING NO.
A-507

CDOT PROJECT D-1-209

DATE: 9/9/2022

REVISION NO.

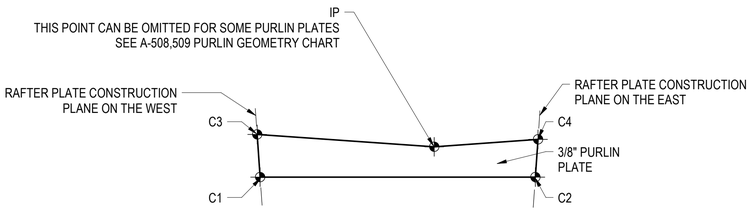

1 GEOMETRY - DOME PURLIN PLATE

1 1/2" = 1'-0"

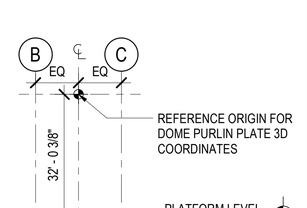

DOME PURLIN GEOMETRY

NAME	C1(ft)	C2(ft)	C3(ft)	C4(ft)	IP(ft)
PP(1,0)	(0, 0, -0.083489)	(4.960377, 0, -0.148766)	(0, 0, 0.072786)	(4.966508, 0, 0.007427)	N/A
PP(1,1)	(-3.6415e-10, -2.501356, -0.112295)	(4.960871, -2.497919, -0.177576)	(-3.6299e-10, -2.504952, 0.044077)	(4.967009, -2.501512, -0.021248)	N/A
PP(1,2)	(-1.455e-9, -5.001383, -0.198722)	(4.962336, -4.994504, -0.263989)	(-1.4506e-9, -5.008582, -0.042509)	(4.968474, -5.001698, -0.107771)	N/A
PP(1,3)	(-3.2718e-9, -7.49876, -0.342721)	(4.964775, -7.488431, -0.407959)	(-3.2627e-9, -7.509556, -0.186741)	(4.970909, -7.499224, -0.251923)	N/A
PP(1,4)	(-5.8138e-9, -9.992165, -0.544196)	(4.968186, -9.978374, -0.60941)	(-5.7981e-9, -10.006551, -0.388545)	(4.974315, -9.992761, -0.453631)	N/A
PP(1,5)	(-9.0796e-9, -12.480276, -0.803049)	(4.972567, -12.463004, -0.868229)	(-9.0556e-9, -12.498266, -0.64765)	(4.978687, -12.480984, -0.712808)	N/A
PP(1,6)	(-1.3068e-8, -14.961707, -1.119706)	(4.977916, -14.941011, -1.184302)	(-1.3033e-8, -14.983306, -0.964412)	(4.984019, -14.962532, -1.029466)	N/A
PP(1,7)	(-1.7776e-8, -17.435133, -1.493907)	(4.984229, -17.411083, -1.557447)	(-1.7729e-8, -17.460412, -1.338155)	(4.990348, -17.436231, -1.402394)	N/A
PP(1,8)	(-2.3204e-8, -19.899621, -1.923079)	(4.991508, -19.871849, -1.987533)	(-2.3138e-8, -19.92831, -1.768864)	(4.997653, -19.900767, -1.831979)	N/A
PP(1,9)	(-2.9323e-8, -22.353524, -2.409256)	(4.999751, -22.321952, -2.474581)	(-2.9281e-8, -22.385703, -2.256257)	(5.005851, -22.354379, -2.320299)	(0.285561, -22.383899, -2.259992)
PP(1,10)	(-3.6169e-8, -24.795495, -2.95243)	(5.008943, -24.760103, -3.01834)	(-3.612e-8, -24.831301, -2.79988)	(5.015026, -24.796041, -2.865124)	(1.340931, -24.821801, -2.817635)
PP(1,11)	(-4.3722e-8, -27.224361, -3.551718)	(5.019087, -27.184986, -3.618529)	(-4.3666e-8, -27.263655, -3.400134)	(5.025166, -27.224464, -3.466131)	(1.065456, -27.25528, -3.414382)
PP(1,12)	(-5.1979e-8, -29.638837, -4.206804)	(5.030179, -29.595292, -4.274804)	(-5.1915e-8, -29.681669, -4.055981)	(5.036271, -29.638405, -4.122891)	(1.188656, -29.671346, -4.072167)
PP(1,13)	(-6.0934e-8, -32.037638, -4.917366)	(5.042212, -31.989717, -4.986821)	(-6.0862e-8, -32.083961, -4.767516)	(5.048305, -32.036377, -4.835775)	(1.201127, -32.072505, -4.784192)
PP(1,14)	(-7.0583e-8, -34.419508, -5.683022)	(5.05518, -34.366976, -5.754195)	(-7.0504e-8, -34.469312, -5.534176)	(5.06128, -34.417208, -5.603967)	(1.228663, -34.456491, -5.551633)
PP(1,15)	(-8.0909e-8, -36.783185, -6.50338)	(5.069075, -36.725787, -6.576512)	(-8.0845e-8, -36.836441, -6.355648)	(5.075181, -36.779558, -6.427245)	(1.236624, -36.822375, -6.373665)
PP(1,16)	(-9.1921e-8, -39.127425, -7.378012)	(5.083887, -39.064881, -7.453328)	(-9.1869e-8, -39.184121, -7.231438)	(5.090007, -39.122184, -7.305082)	(1.275822, -39.168345, -7.250547)
PP(1,17)	(-1.0361e-7, -41.450988, -8.306465)	(5.099609, -41.382998, -8.384174)	(-1.0357e-7, -41.511081, -8.161176)	(5.105747, -41.443797, -8.237073)	(1.275654, -41.493982, -8.180836)
PP(1,18)	(-1.1597e-7, -43.752648, -9.288255)	(5.116232, -43.678891, -9.368546)	(-1.1594e-7, -43.816126, -9.14429)	(5.122395, -43.743181, -9.222633)	(1.302237, -43.797242, -9.164976)
PP(1,19)	(-1.29e-7, -46.031187, -10.322874)	(5.133749, -45.951323, -10.405916)	(-1.2898e-7, -46.097999,...	(5.139939, -46.019061, -10.261319)	(1.297405, -46.077694, -10.201604)
PP(1,20)	(-1.4269e-7, -48.285403, -11.409784)	(5.15215, -48.199075, -11.495718)	(-1.4267e-7, -48.355637, -11.26855)	(5.158372, -48.27025, -11.352484)	(1.481356, -48.330627, -11.293638)
PP(1,21)	(-1.5703e-7, -50.513982, -12.548087)	(5.171424, -50.421041, -12.637476)	(-1.5702e-7, -50.587286,...	(5.177679, -50.495384, -12.495559)	(1.517129, -50.559799, -12.434902)
PP(1,22)	(-1.674e-7, -52.043845, -13.367182)	(5.184832, -51.859783, -13.40989)	(-1.674e-7, -52.117833, -13.229509)	(5.19094, -51.933555, -13.272267)	N/A
PP(2,0)	(4.96038, 0, -0.148687)	(9.917813, 0, -0.338665)	(4.966509, 0, 0.007454)	(9.929611, 0, -0.182741)	N/A
PP(2,1)	(4.960875, -2.506138, -0.17773)	(9.918794, -2.497903, -0.36782)	(4.967007, -2.509763, -0.021453)	(9.930607, -2.501519, -0.211752)	N/A
PP(2,2)	(4.962348, -5.010941, -0.264801)	(9.921682, -4.994442, -0.455264)	(4.968483, -5.0182, -0.108469)	(9.933509, -5.001685, -0.299088)	N/A
PP(2,3)	(4.964802, -7.513082, -0.40981)	(9.926484, -7.488258, -0.600949)	(4.970935, -7.523977, -0.253513)	(9.938324, -7.499136, -0.444711)	(7.134735, -7.513135, -0.337104)
PP(2,4)	(4.968234, -10.011232, -0.612682)	(9.933198, -9.97799, -0.804795)	(4.974364, -10.025768, -0.456489)	(9.945047, -9.992511, -0.648575)	(7.101537, -10.011497, -0.539111)
PP(2,5)	(4.972643, -12.504064, -0.873313)	(9.941821, -12.462278, -1.066686)	(4.978774, -12.522268, -0.71714)	(9.953671, -12.480451, -0.910594)	(7.314857, -12.502564, -0.808562)
PP(2,6)	(4.978026, -14.990244, -1.191572)	(9.952348, -14.939761, -1.386466)	(4.984181, -15.012241, -1.034855)	(9.96418, -14.961586, -1.230779)	(8.055025, -14.980892, -1.156477)
PP(2,7)	(4.98438, -17.468474, -1.567313)	(9.964773, -17.40909, -1.763986)	(4.990546, -17.494266, -1.410436)	(9.976534, -17.434469, -1.609436)	(8.942702, -17.446772, -1.568757)
PP(2,8)	(4.991708, -19.937507, -2.000429)	(9.979095, -19.868899, -2.19937)	(4.997789, -19.966624, -1.845698)	(9.990819, -19.897819, -2.045496)	(8.288781, -19.921191, -1.977828)
PP(2,9)	(4.999998, -22.39596, -2.490866)	(9.995337, -22.317685, -2.692874)	(5.006096, -22.428774, -2.33623)	(10.007205, -22.350674, -2.537225)	(6.902109, -22.39891, -2.413632)
PP(2,10)	(5.009251, -24.842415, -3.038491)	(10.013463, -24.754039, -3.244292)	(5.015373, -24.87906, -2.883858)	(10.025342, -24.790755, -3.089166)	(7.228543, -24.839687, -2.976086)
PP(2,11)	(5.019463, -27.275619, -3.642975)	(10.033479, -27.176622, -3.85334)	(5.025587, -27.315934, -3.489058)	(10.04536, -27.21701, -3.698957)	(7.266191, -27.271355, -3.584365)
PP(2,12)	(5.030631, -29.69428, -4.303991)	(10.055376, -29.584071, -4.519651)	(5.036769, -29.738342, -4.150534)	(10.067305, -29.62828, -4.365494)	(7.250079, -29.689363, -4.24704)
PP(2,13)	(5.042747, -32.097092, -5.021224)	(10.07914, -31.975024, -5.242861)	(5.048895, -32.144863, -4.86847)	(10.091092, -32.022959, -5.08939)	(7.287338, -32.090082, -4.968662)
PP(2,14)	(5.055806, -34.482781, -5.794298)	(10.104758, -34.348139, -6.022558)	(5.061966, -34.534267, -5.642283)	(10.116744, -34.399838, -5.869721)	(7.304092, -34.473844, -5.745511)
PP(2,15)	(5.069798, -36.850068, -6.622824)	(10.132216, -36.702079, -6.858305)	(5.075976, -36.905248, -6.471677)	(10.144233, -36.757515, -6.706262)	(7.326679, -36.838714, -6.578394)
PP(2,16)	(5.084716, -39.197688, -7.506376)	(10.161492, -39.035519, -7.749629)	(5.09092, -39.256565, -7.356152)	(10.173556, -39.094693, -7.59845)	(7.35462, -39.18339, -7.466819)
PP(2,17)	(5.100553, -41.524381, -8.444509)	(10.192571, -41.347146, -8.696031)	(5.106785, -41.586922, -8.295345)	(10.20469, -41.410027, -8.545859)	(7.381117, -41.506773, -8.410039)
PP(2,18)	(5.117302, -43.8289, -9.436741)	(10.225436, -43.635659, -9.696977)	(5.123568, -43.8951, -9.288699)	(10.237623, -43.702247, -9.547871)	(7.408886, -43.807522, -9.407637)
PP(2,19)	(5.134953, -46.110005, -10.48257)	(10.26007, -45.899769, -10.751905)	(5.141256, -46.179829, -10.335779)	(10.27233, -45.970028, -10.604001)	(7.436638, -46.08441, -10.459052)
PP(2,20)	(5.1535, -48.366474, -11.581466)	(10.296455, -48.138215, -11.860202)	(5.159869, -48.440209, -11.435395)	(10.308796, -48.212124, -11.713586)	(7.582765, -48.331047, -11.569928)
PP(2,21)	(5.172945, -50.596072, -12.73145)	(10.334523, -50.349811, -13.021564)	(5.179237, -50.671604, -12.589262)	(10.346968, -50.427101, -12.875865)	(7.001858, -50.583826, -12.693246)
PP(2,22)	(5.184747, -51.858244, -13.411378)	(10.352083, -51.307138, -13.542295)	(5.190867, -51.933088, -13.274254)	(10.363862, -51.381378, -13.405314)	N/A
PP(3,0)	(9.917838, 0, -0.338333)	(14.869389, 0, -0.643414)	(9.929629, 0, 0.182502)	(14.887118, 0, -0.487949)	N/A
PP(3,1)	(9.918804, -2.510749, -0.368058)	(14.870841, -2.497866, -0.673354)	(9.930639, -2.514444, -0.211603)	(14.88861, -2.501537, -0.517601)	(13.220184, -2.505875, -0.414855)
PP(3,2)	(9.921716, -5.020139, -0.456536)	(14.875087, -4.994292, -0.763142)	(9.93358, -5.027551, -0.299697)	(14.892926, -5.001664, -0.606859)	(12.618199, -5.013511, -0.46652)
PP(3,3)	(9.926562, -7.526822, -0.603859)	(14.88214, -7.487843, -0.912725)	(9.938449, -7.53797, -0.446731)	(14.900043, -7.498943, -0.755991)	(12.431268, -7.518301, -0.602962)
PP(3,4)	(9.93334, -10.029448, -0.809954)	(14.891997, -9.977085, -1.122017)	(9.945246, -10.044352, -0.652616)	(14.909958, -9.991937, -0.964922)	(12.35281, -10.018824, -0.805216)
PP(3,5)	(9.942047, -12.526667, -1.074719)	(14.904654, -12.460581, -1.390891)	(9.953979, -12.545369, -0.91709)	(14.922661, -12.479213, -1.233551)	(12.395847, -12.512679, -1.074105)
PP(3,6)	(9.952677, -15.017125, -1.398025)	(14.920103, -14.936896, -1.719183)	(9.964675, -15.039755, -1.239624)	(14.938128, -14.955326, -1.561885)	(12.677663, -14.995608, -1.417322)
PP(3,7)	(9.965226, -17.499509, -1.779736)	(14.938336, -17.404601, -2.106712)	(9.977298, -17.526178, -1.620489)	(14.956304, -17.430772, -1.950146)	(13.09248, -17.466132, -1.828848)
PP(3,8)	(9.979701, -19.972557, -2.219963)	(14.959353, -19.862238, -2.55368)	(9.991626, -20.002737, -2.062705)	(14.977248, -19.892064, -2.397973)	(12.863456, -19.938638, -2.257641)
PP(3,9)	(9.996099, -22.434775, -2.71901)	(14.983191, -22.308204, -3.060505)	(10.008037, -22.468737, -2.562146)	(15.001324, -22.342265, -2.902885)	(12.225654, -22.412006, -2.716065)
PP(3,10)	(10.014418, -24.884626, -3.276748)	(15.009802, -24.740993, -3.626926)	(10.026436, -24.92266, -3.119539)	(15.02802, -24.779056, -3.469296)	(12.357666, -24.854965, -3.285694)
PP(3,11)	(10.03465, -27.320785, -3.89287)	(15.039191, -27.159178, -4.252657)	(10.046682, -27.362689, -3.736298)	(15.057404, -27.201049, -4.095909)	(12.431711, -27.284882, -3.910701)
PP(3,12)	(10.056789, -29.741915, -4.567015)	(15.071344, -29.561321, -4.937293)	(10.068867, -29.787786, -4.410764)	(15.089654, -29.607218, -4.780653)	(12.433436, -29.701674, -4.588607)
PP(3,13)	(10.08082, -32.146642, -5.298869)	(15.106239, -31.945971, -5.680434)	(10.092934, -32.196449, -5.143203)	(15.124598, -31.995783, -5.524452)	(12.481445, -32.099942, -5.328078)
PP(3,14)	(10.106732, -34.533634, -6.088044)	(15.143858, -34.311708, -6.481633)	(10.118888, -34.587388, -5.933013)	(15.162284, -34.365476, -6.326257)	(12.515273, -34.480486, -6.124058)
PP(3,15)	(10.134505, -36.901549, -6.934137)	(15.184176, -36.657112, -7.340411)	(10.146714, -36.959234, -6.779887)	(15.202664, -36.714813, -7.185813)	(12.553893, -36.841191, -6.977606)
PP(3,16)	(10.164126, -39.24906, -7.836711)	(15.22716, -38.98078, -8.256251)	(10.176402, -39.310682, -7.683312)	(15.245737, -39.042416, -8.102512)	(12.595465, -39.180763, -7.888073)

DOME PURLIN GEOMETRY

NAME	C1(ft)	C2(ft)	C3(ft)	C4(ft)	IP(ft)
PP(3,17)	(10.195581, -41.574847, -8.795303)	(15.272787, -41.281321, -9.228608)	(10.207932, -41.640384, -8.642892)	(15.291464, -41.346862, -9.07588)	(12.64012, -41.49781, -8.85501)
PP(3,18)	(10.228854, -43.877599, -9.809417)	(15.321031, -43.557358, -10.256898)	(10.24129, -43.947041, -9.658092)	(15.339826, -43.626797, -10.105269)	(12.684966, -43.791161, -9.877608)
PP(3,19)	(10.263928, -46.156015, -10.878529)	(15.371864, -45.807528, -11.340506)	(10.276456, -46.229348, -10.728394)	(15.390788, -45.880839, -11.190104)	(12.73392, -46.059237, -10.955652)
PP(3,20)	(10.300788, -48.409044, -12.002216)	(15.425279, -48.030481, -12.478526)	(10.313802, -48.488823, -11.848997)	(15.444323, -48.107763, -12.32979)	(13.238312, -48.268164, -12.129652)
PP(3,21)	(10.35185, -51.305508, -13.54488)	(15.486002, -50.397347, -13.758017)	(10.363645, -51.380096, -13.407912)	(15.503691, -50.470893, -13.621294)	N/A
PP(4,0)	(14.869459, 0, -0.642802)	(19.81378, 0, -1.053349)	(14.887172, 0, -0.487473)	(19.836687, 0, -0.898451)	N/A
PP(4,1)	(14.870861, -2.515324, -0.673677)	(19.815687, -2.49779, -1.084679)	(14.888721, -2.519149, -0.517027)	(19.838688, -2.501578, -0.929214)	(18.280518, -2.507098, -0.7999)
PP(4,2)	(14.875152, -5.029233, -0.764899)	(19.821219, -4.994, -1.178619)	(14.893113, -5.036929, -0.607373)	(19.844393, -5.001633, -1.022083)	(17.682403, -5.016993, -0.842057)
PP(4,3)	(14.882291, -7.540323, -0.916764)	(19.8304, -7.487061, -1.33511)	(14.900343, -7.551935, -0.758473)	(19.853738, -7.498591, -1.177601)	(17.500251, -7.523815, -0.980099)
PP(4,4)	(14.892274, -10.047192, -1.129201)	(19.843226, -9.975398, -1.554051)	(14.910411, -10.062763, -0.97024)	(19.866719, -9.990879, -1.39567)	(17.419173, -10.026159, -1.187787)
PP(4,5)	(14.905097, -12.548434, -1.402106)	(19.859689, -12.45744, -1.835301)	(14.923331, -12.568031, -1.2424)	(19.883324, -12.476925, -1.676171)	(17.423221, -12.521766, -1.463831)
PP(4,6)	(14.920752, -15.042641, -1.735352)	(19.879781, -14.931617, -2.178671)	(14.939132, -15.066406, -1.574523)	(19.903517, -14.955144, -2.019105)	(17.556976, -15.007219, -1.812427)
PP(4,7)	(14.939234, -17.528429, -2.128807)	(19.903488, -17.396363, -2.583954)	(14.95775, -17.55646, -1.966962)	(19.927239, -17.423907, -2.424576)	(17.743765, -17.481459, -2.227461)
PP(4,8)	(14.960557, -20.004415, -2.582665)	(19.930798, -19.850112, -3.05112)	(14.978934, -20.036296, -2.422141)	(19.954528, -19.881609, -2.892193)	(17.634845, -19.952946, -2.676953)
PP(4,9)	(14.984718, -22.469007, -3.097409)	(19.961728, -22.291227, -3.580198)	(15.003066, -22.504778, -2.937784)	(19.985684, -22.327048, -3.420002)	(17.33687, -22.420536, -3.168061)
PP(4,10)	(15.011721, -24.92062, -3.672856)	(19.996221, -24.718102, -4.170824)	(15.030225, -24.960718, -3.512684)	(20.020377, -24.758242, -4.010137)	(17.393937, -24.863511, -3.753466)
PP(4,11)	(15.041549, -27.357804, -4.308737)	(20.034276, -27.129191, -4.822695)	(15.060085, -27.401991, -4.149229)	(20.058405, -27.173291, -4.663159)	(17.484996, -27.289584, -4.403775)
PP(4,12)	(15.074197, -29.779148, -5.004644)	(20.075876, -29.522967, -5.535358)	(15.092814, -29.827521, -4.845488)	(20.100147, -29.571303, -5.375975)	(17.50362, -29.702435, -5.106542)
PP(4,13)	(15.109641, -32.183176, -5.760254)	(20.120991, -31.897875, -6.308363)	(15.128327, -32.235714, -5.601691)	(20.145337, -31.950326, -6.149713)	(17.560606, -32.095379, -5.8733)
PP(4,14)	(15.147864, -34.568461, -6.575153)	(20.169594, -34.252395, -7.141214)	(15.166626, -34.62517, -6.417271)	(20.194036, -34.308993, -6.98329)	(17.609809, -34.469265, -6.698565)
PP(4,15)	(15.188835, -36.933569, -7.448912)	(20.221651, -36.585013, -8.033375)	(15.207694, -36.994439, -7.291845)	(20.246186, -36.645738, -7.876334)	(17.663866, -36.821918, -7.583269)
PP(4,16)	(15.232536, -39.277075, -8.381065)	(20.277118, -38.894232, -8.984272)	(15.251509, -39.342096, -8.224939)	(20.301778, -38.959072, -8.828229)	(17.719174, -39.152109, -8.526473)
PP(4,17)	(15.278944, -41.597566, -9.371115)	(20.335962, -41.178567, -9.993294)	(15.298048, -41.666734, -9.216033)	(20.36077, -41.247505, -9.838373)	(17.778794, -41.458166, -9.52798)
PP(4,18)	(15.328035, -43.893636, -10.418531)	(20.398146, -43.436551, -11.059793)	(15.347281, -43.966919, -10.264646)	(20.42312, -43.509555, -10.906139)	(17.839966, -43.738852, -10.586888)
PP(4,19)	(15.379784, -46.163892, -11.522749)	(20.463633, -45.666733, -12.183084)	(15.39919, -46.241297, -11.370128)	(20.488794, -45.74379, -12.030791)	(17.906223, -45.992438, -11.702986)
PP(4,20)	(15.434073, -48.404366, -12.681811)	(20.53235, -47.867731, -13.362562)	(15.453633, -48.485633, -12.530572)	(20.557711, -47.948636, -13.211641)	(17.966072, -48.21718, -12.873432)
PP(4,21)	(15.484916, -50.391535, -13.765339)	(20.575068, -49.132299, -14.066701)	(15.502698, -50.467849, -13.629869)	(20.598039, -49.207329, -13.931538)	N/A
PP(5,0)	(19.813918, 0, -1.052413)	(24.748955, 0, -1.558731)	(19.836801, 0, -0.897677)	(24.777749, 0, -1.404601)	N/A
PP(5,1)	(19.815717, -2.520026, -1.085112)	(24.751305, -2.497664, -1.592216)	(19.838925, -2.524066, -0.928161)	(24.780288, -2.501644, -1.437149)	(23.250905, -2.508565, -1.280329)
PP(5,2)	(19.821322, -5.038525, -1.180957)	(24.758049, -4.99352, -1.692597)	(19.844757, -5.04669, -1.022497)	(24.787377, -5.001577, -1.5358)	(22.680815, -5.020715, -1.318742)
PP(5,3)	(19.830644, -7.553995, -1.34049)	(24.769229, -7.485775, -1.8598)	(19.854296, -7.566365, -1.180639)	(24.798891, -7.497999, -1.701394)	(22.510135, -7.529437, -1.462995)
PP(5,4)	(19.843677, -10.064925, -1.563636)	(24.784836, -9.972634, -2.093704)	(19.867535, -10.081578, -1.402522)	(24.814817, -9.989112, -1.933822)	(22.436372, -10.033194, -1.681954)
PP(5,5)	(19.860416, -12.569807, -1.850292)	(24.804863, -12.452301, -2.394137)	(19.884493, -12.59084, -1.687881)	(24.835147, -12.47312, -2.232917)	(22.425409, -12.529832, -1.972113)
PP(5,6)	(19.880853, -15.067123, -2.200328)	(24.829294, -14.922984, -2.760872)	(19.905198, -15.092698, -2.036346)	(24.859833, -14.948214, -2.598635)	(22.495413, -15.016303, -2.335766)
PP(5,7)	(19.904976, -17.555293, -2.613585)	(24.858106, -17.382904, -3.193655)	(19.929545, -17.585479, -2.448388)	(24.888806, -17.412547, -3.030966)	(22.579793, -17.49191, -2.765962)
PP(5,8)	(19.932789, -20.032604, -3.090008)	(24.891242, -19.83039, -3.691829)	(19.957286, -20.067053, -2.925529)	(24.922026, -19.86437, -3.529116)	(22.530163, -19.96064, -3.244828)
PP(5,9)	(19.96426, -22.4975, -3.62969)	(24.928645, -22.263919, -4.254111)	(19.988656, -22.535968, -3.466683)	(24.955959, -22.302317, -4.090931)	(22.379366, -22.421997, -3.773611)
PP(5,10)	(19.999404, -24.948512, -4.232393)	(24.970236, -24.68178, -4.879983)	(20.024019, -24.991549, -4.068886)	(25.001525, -24.724819, -4.715993)	(22.399548, -24.86224, -4.38528)
PP(5,11)	(20.038191, -27.384047, -4.897879)	(25.016012, -27.082292, -5.5691)	(20.062867, -27.43143, -4.73508)	(25.047251, -27.129473, -5.406518)	(22.497378, -27.281709, -5.070629)
PP(5,12)	(20.080616, -29.802591, -5.625698)	(25.065947, -29.463827, -6.320958)	(20.105398, -29.854371, -5.463441)	(25.097351, -29.515424, -6.158798)	(22.534149, -29.68689, -5.809729)
PP(5,13)	(20.126647, -32.202544, -6.415492)	(25.120006, -31.824721, -7.13504)	(20.151533, -32.258719, -6.253952)	(25.151515, -31.880641, -6.973757)	(22.595938, -32.070987, -6.614089)
PP(5,14)	(20.176262, -34.582355, -7.266819)	(25.17815, -34.163347, -8.010785)	(20.201254, -34.642918, -7.106129)	(25.209777, -34.223591, -7.850461)	(22.657055, -34.434075, -7.479586)
PP(5,15)	(20.22942, -36.940472, -8.179205)	(25.24034, -36.478086, -8.947586)	(20.254553, -37.005422, -8.019473)	(25.272088, -36.542638, -8.788353)	(22.723517, -36.774109, -8.406549)
PP(5,16)	(20.286093, -39.275351, -9.152141)	(25.306516, -38.767339, -9.944795)	(20.311387, -39.344656, -8.993544)	(25.338418, -38.836163, -9.786816)	(22.792196, -39.089767, -9.393959)
PP(5,17)	(20.346252, -41.58546, -10.185081)	(25.376637, -41.029523, -11.001721)	(20.371734, -41.659118, -10.027713)	(25.408733, -41.102608, -10.845093)	(22.864328, -41.379396, -10.441342)
PP(5,18)	(20.409864, -43.869274, -11.277441)	(25.450656, -43.263073, -12.117635)	(20.435549, -43.947249, -11.121462)	(25.482964, -43.340367, -11.962531)	(22.940686, -43.641333, -11.548209)
PP(5,19)	(20.476874, -46.124779, -12.428346)	(25.528568, -45.466513, -13.291394)	(20.503909, -46.210851, -12.267322)	(25.561058, -45.548058, -13.138358)	(23.416124, -45.823287, -12.779803)
PP(5,20)	(20.57401, -49.127978, -14.072185)	(25.607757, -47.536076, -14.450767)	(20.597084, -49.204804, -13.937665)	(25.636666, -47.611057, -14.316685)	N/A
PP(6,0)	(24.749202, 0, -1.557412)	(29.675131, 0, -2.150055)	(24.777958, 0, -1.403479)	(29.708783, 0, -1.996712)	N/A
PP(6,1)	(24.751348, -2.524997, -1.592787)	(29.677899, -2.497469, -2.186612)	(24.780716, -2.529354, -1.435577)	(29.711872, -2.501746, -2.031892)	(28.198986, -2.510187, -1.849992)
PP(6,2)	(24.758196, -5.048282, -1.695667)	(29.685745, -4.99278, -2.29617)	(24.787998, -5.057133, -1.536197)	(29.720298, -5.001483, -2.138965)	(27.651867, -5.02468, -1.888683)
PP(6,3)	(24.769579, -7.568177, -1.866872)	(29.698731, -7.483801, -2.478635)	(24.799803, -7.581651, -1.705288)	(29.733851, -7.497069, -2.319094)	(27.488056, -7.535241, -2.043568)
PP(6,4)	(24.785493, -10.082995, -2.106326)	(29.716848, -9.96839, -2.73385)	(24.816123, -10.101213, -1.942792)	(29.752515, -9.986357, -2.572145)	(27.419461, -10.040055, -2.279875)
PP(6,5)	(24.805929, -12.591045, -2.41392)	(29.740082, -12.444413, -3.061592)	(24.836975, -12.614147, -2.248472)	(29.776277, -12.467208, -2.897901)	(27.40303, -12.536888, -2.592365)
PP(6,6)	(24.830877, -15.090632, -2.789517)	(29.768415, -14.909737, -3.461571)	(24.862397, -15.11882, -2.621937)	(29.805087, -14.937475, -3.296222)	(27.447058, -15.022648, -2.982398)
PP(6,7)	(24.860318, -17.57978, -3.232867)	(29.801796, -17.362263, -3.933457)	(24.892188, -17.613058, -3.063885)	(29.838843, -17.394955, -3.766996)	(27.481666, -17.497095, -3.440905)
PP(6,8)	(24.8942, -20.056129, -3.743112)	(29.84007, -19.800233, -4.475482)	(24.926101, -20.094135, -3.574389)	(29.877399, -19.837769, -4.30839)	(27.449188, -19.961309, -3.957985)
PP(6,9)	(24.932395, -22.518385, -4.319078)	(29.883062, -22.222491, -5.083848)	(24.964127, -22.560598, -4.152255)	(29.920442, -22.264568, -4.917117)	(27.387155, -22.413434, -4.535686)
PP(6,10)	(24.974939, -24.965504, -4.960517)	(29.930643, -24.627222, -5.757818)	(25.006904, -25.01246, -4.793629)	(29.968482, -24.674233, -5.59028)	(27.388531, -24.847158, -5.186354)
PP(6,11)	(25.021785, -27.395757, -5.667193)	(29.982807, -27.012608, -6.496965)	(25.053867, -27.447342, -5.501032)	(30.020633, -27.064028, -6.330883)	(27.480665, -27.25677, -5.916919)
PP(6,12)	(25.072927, -29.807489, -6.438629)	(30.039517, -29.37691, -7.30073)	(25.105137, -29.863688, -6.27329)	(30.077492, -29.432901, -7.135547)	(27.538181, -29.649216, -6.705874)
PP(6,13)	(25.12833, -32.198977, -7.27441)	(30.100733, -31.718358, -8.168514)	(25.160674, -32.259787, -7.110023)	(30.138845, -31.778886, -8.004433)	(27.604146, -32.019653, -7.55992)
PP(6,14)	(25.187961, -34.568523, -8.174053)	(30.166407, -34.035211, -9.099671)	(25.220447, -34.633937, -8.010748)	(30.204659, -34.100249, -8.936844)	(27.675303, -34.366573, -8.477957)
PP(6,15)	(25.251771, -36.914441, -9.137031)	(30.236491, -36.325745, -10.09351)	(25.284435, -36.984426, -8.974982)	(30.274884, -36.395262, -9.932085)	(27.749449, -36.688478, -9.458982)
PP(6,16)	(25.319725, -39.235051, -10.162774)	(30.310913, -38.588259, -11.149288)	(25.352603, -39.309587, -10.002112)	(30.349503, -38.662228, -10.989386)	(27.826988, -38.983657, -10.502383)
PP(6,17)	(25.391786, -41.528684, -11.250674)	(30.389624, -40.82107, -12.266221)	(25.424902, -41.607731, -11.091559)	(30.428445, -40.899443, -12.108)	(27.908399, -41.250367, -11.607569)
PP(6,18)	(25.467909, -43.793687, -12.400076)	(30.472554, -43.022525, -13.443464)	(25.501356, -43.87738, -12.24233)	(30.511641, -43.105259, -13.287061)	(28.010959, -43.484333, -12.777304)
PP(6,19)	(25.547728, -46.020797, -13.605563)	(30.559021, -45.191047, -14.680633)	(25.58014, -46.105024, -13.455368)	(30.598497, -45.277829, -14.525421)	(27.700595, -45.749791, -13.917523)
PP(6,20)	(25.605346, -47.527781, -14.460262)	(30.575845, -45.609662, -14.925164)	(25.634482, -47.607012, -14.328156)	(30.609897, -45.686996, -14.793518)	N/A
PP(7,0)	(29.675512, 0, -2.148317)	(34.59163, 0, -2.817826)	(29.709118, 0, -1.995183)	(34.629957, 0, -2.665334)	N/A

DESIGN BY:										
DRAWN BY:		4	7/3/2023	ISSUED FOR BID						
CHECKED BY:										
APPROVED BY:		0	9/9/2022	ISSUED FOR PERMIT	MN	ZT	SD			
CDOT/APPROVED BY:		NO.	DATE	REVISIONS	DES.	DRW.	CHK.	DCCO	CDOT	

TRANSYSTEMS
222 SOUTH RIVERSIDE PLAZA SUITE 610
CHICAGO, ILLINOIS 60606

SKIDMORE, OWINGS & MERRILL LLP
224 SOUTH MICHIGAN AVENUE, SUITE 1000
CHICAGO, ILLINOIS 60604

CHICAGO DEPARTMENT
OF TRANSPORTATION
DIVISION OF ENGINEERING

STATE / LAKE LOOP ELEVATED STATION
200 NORTH STATE STREET, CHICAGO, IL 60601

SPEC. NO.

DOME PURLIN GEOMETRY CHART

DRAWING NO.
A-508

CDOT PROJECT D-1-209

DATE: 9/9/2022

REVISION NO.

DOME PURLIN GEOMETRY

NAME	C1(ft)	C2(ft)	C3(ft)	C4(ft)	IP(ft)
PP(7,1)	(29.677951, -2.530295, -2.187383)	(34.594769, -2.497192, -2.858505)	(29.712542, -2.5351, -2.029776)	(34.63359, -2.501885, -2.704149)	(33.132449, -2.511973, -2.499868)
PP(7,2)	(29.685932, -5.058586, -2.300221)	(34.603518, -4.991711, -2.980376)	(29.721234, -5.068402, -2.139507)	(34.643226, -5.001316, -2.822715)	(32.604044, -5.028899, -2.54305)
PP(7,3)	(29.699193, -7.582917, -2.48795)	(34.617971, -7.480921, -3.183313)	(29.73519, -7.597938, -2.324322)	(34.65855, -7.495641, -3.022536)	(32.445826, -7.541128, -2.71396)
PP(7,4)	(29.71773, -10.101317, -2.750487)	(34.638114, -9.962176, -3.467098)	(29.7544, -10.121724, -2.584167)	(34.679541, -9.982204, -3.303433)	(32.380862, -10.046446, -2.974744)
PP(7,5)	(29.741531, -12.611808, -3.087713)	(34.663929, -12.432837, -3.831427)	(29.778888, -12.637803, -2.918784)	(34.706182, -12.458361, -3.665104)	(32.365187, -12.542238, -3.319311)
PP(7,6)	(29.770585, -15.11241, -3.499477)	(34.695389, -14.890274, -4.275906)	(29.80868, -15.14424, -3.327845)	(34.738406, -14.921453, -4.107325)	(32.397532, -15.025248, -3.747755)
PP(7,7)	(29.804848, -17.600517, -3.985328)	(34.732397, -17.331918, -4.800074)	(29.843513, -17.638149, -3.811879)	(34.776099, -17.368784, -4.629682)	(32.414631, -17.495072, -4.250243)
PP(7,8)	(29.844161, -20.07271, -4.542851)	(34.774644, -19.755957, -5.40059)	(29.882935, -20.11555, -4.369624)	(34.818895, -19.798277, -5.228985)	(32.375393, -19.952073, -4.816538)
PP(7,9)	(29.888217, -22.528287, -5.168478)	(34.821834, -22.161983, -6.069728)	(29.92685, -22.575659, -4.997185)	(34.8661, -22.20908, -5.898954)	(32.365836, -22.391015, -5.455354)
PP(7,10)	(29.937066, -24.967046, -5.862047)	(34.873736, -24.548087, -6.806446)	(29.975908, -25.019336, -5.691291)	(34.918492, -24.600337, -6.635342)	(32.374354, -24.811796, -6.162917)
PP(7,11)	(29.990658, -27.387158, -6.623284)	(34.930342, -26.912323, -7.6102)	(30.029662, -27.444339, -6.453476)	(34.975189, -26.969309, -7.440492)	(32.448807, -27.207289, -6.949939)
PP(7,12)	(30.048978, -29.786809, -7.451697)	(34.991609, -29.252826, -8.48035)	(30.088144, -29.848851, -7.282998)	(35.036627, -29.314601, -8.311893)	(32.513608, -29.581806, -7.801144)
PP(7,13)	(30.111989, -32.164136, -8.346803)	(35.057486, -31.567716, -9.416197)	(30.151324, -32.231022, -8.179363)	(35.102684, -31.634257, -9.249135)	(32.582699, -31.932281, -8.718674)
PP(7,14)	(30.179652, -34.517295, -9.308065)	(35.127921, -33.855142, -10.416992)	(30.219162, -34.588997, -9.14204)	(35.173303, -33.926414, -10.251475)	(32.655939, -34.256877, -9.701857)
PP(7,15)	(30.251906, -36.844451, -10.334887)	(35.202856, -36.113271, -11.481935)	(30.291654, -36.920958, -10.170392)	(35.248432, -36.189243, -11.318102)	(32.735329, -36.553475, -10.750443)
PP(7,16)	(30.328712, -39.143779, -11.426634)	(35.282211, -38.340298, -12.610169)	(30.368731, -39.225038, -11.263861)	(35.328027, -38.420902, -12.448221)	(32.81939, -38.820392, -11.863412)
PP(7,17)	(30.410022, -41.413469, -12.582613)	(35.365911, -40.534445, -13.800788)	(30.450352, -41.499445, -12.421698)	(35.412025, -40.619642, -13.640842)	(32.907025, -41.056011, -13.039673)
PP(7,18)	(30.495376, -43.643968, -13.797683)	(35.453372, -42.694052, -15.053105)	(30.535227, -43.732438, -13.641694)	(35.499881, -42.783543, -14.894833)	(32.838471, -43.284401, -14.236571)
PP(7,19)	(30.574959, -45.606213, -14.927372)	(35.482906, -43.382151, -15.462359)	(30.609241, -45.686685, -14.79705)	(35.521914, -43.460482, -15.332552)	N/A
PP(8,0)	(34.59218, 0, -2.815638)	(39.498597, 0, -3.552733)	(34.630453, 0, -2.663361)	(39.541506, 0, -3.401153)	N/A
PP(8,1)	(34.594824, -2.53585, -2.859549)	(39.502003, -2.496817, -3.598695)	(34.634555, -2.541247, -2.701528)	(39.545621, -2.502063, -3.444732)	(38.05171, -2.513918, -3.220504)
PP(8,2)	(34.603732, -5.06925, -2.985729)	(39.511284, -4.990224, -3.736336)	(34.644529, -5.080346, -2.823694)	(39.556167, -5.001024, -3.578215)	(37.538973, -5.033297, -3.272691)
PP(8,3)	(34.618528, -7.597823, -3.195592)	(39.526571, -7.476864, -3.965479)	(34.660367, -7.614891, -3.029829)	(39.572702, -7.493504, -3.803456)	(37.384571, -7.54687, -3.465562)
PP(8,4)	(34.639204, -10.119164, -3.489043)	(39.547845, -9.953367, -4.285812)	(34.682071, -10.142469, -3.31981)	(39.595206, -9.97612, -4.120168)	(37.323324, -10.051777, -3.759077)
PP(8,5)	(34.66575, -12.630859, -3.865943)	(39.575082, -12.416375, -4.696898)	(34.709638, -12.660668, -3.693478)	(39.623637, -12.445492, -4.527988)	(37.307591, -12.544925, -4.145916)
PP(8,6)	(34.698147, -15.130491, -4.32611)	(39.608249, -14.862549, -5.198173)	(34.743147, -15.167144, -4.15029)	(39.657946, -14.898258, -5.026419)	(37.336676, -15.022378, -4.626134)
PP(8,7)	(34.736317, -17.614591, -4.868752)	(39.647176, -17.288651, -5.788968)	(34.782208, -17.658008, -4.690634)	(39.697939, -17.330977, -5.614847)	(37.351528, -17.483223, -5.189185)
PP(8,8)	(34.779935, -20.078292, -5.488983)	(39.691354, -19.692821, -6.464031)	(34.825993, -20.127434, -5.311347)	(39.743099, -19.741412, -6.287893)	(37.289115, -19.929348, -5.817225)
PP(8,9)	(34.828447, -22.521871, -6.179603)	(39.740467, -22.075911, -7.210357)	(34.87452, -22.576019, -6.003611)	(39.792344, -22.129695, -7.035065)	(37.306338, -22.350033, -6.530468)
PP(8,10)	(34.881909, -24.946417, -6.940656)	(39.794115, -24.435939, -8.026434)	(34.928191, -25.005734, -6.765744)	(39.846475, -24.495097, -7.851498)	(37.331296, -24.750253, -7.313515)
PP(8,11)	(34.94028, -27.350065, -7.771808)	(39.852285, -26.770821, -8.911565)	(34.986817, -27.414619, -7.59801)	(39.904919, -26.835142, -8.737903)	(37.39385, -27.124359, -8.173428)
PP(8,12)	(35.003531, -29.730824, -8.672551)	(39.914926, -29.078542, -9.864993)	(35.050308, -29.800568, -8.500119)	(39.967806, -29.147955, -9.692881)	(37.461773, -29.473221, -9.102732)
PP(8,13)	(35.071626, -32.086692, -9.64233)	(39.981982, -31.357095, -10.885888)	(35.118651, -32.161596, -9.47143)	(40.035144, -31.4316, -10.715401)	(37.530954, -31.795419, -10.099651)
PP(8,14)	(35.14452, -34.415668, -10.680544)	(40.053394, -33.604501, -11.973364)	(35.1918, -34.495698, -10.511353)	(40.106848, -33.68406, -11.804661)	(37.604091, -34.088654, -11.164083)
PP(8,15)	(35.222147, -36.715771, -11.786525)	(40.129099, -35.818804, -13.126474)	(35.269744, -36.80088, -11.619219)	(40.182859, -35.903384, -12.959702)	(37.681156, -36.350981, -12.295205)
PP(8,16)	(35.304458, -38.985022, -12.959554)	(40.208982, -37.998089, -14.344203)	(35.352424, -39.075162, -12.794303)	(40.26312, -38.087634, -14.179536)	(37.762745, -38.580346, -13.492327)
PP(8,17)	(35.390955, -41.21278, -14.193807)	(40.29244, -40.140586, -15.625692)	(35.438528, -41.30597, -14.033212)	(40.347072, -40.234792, -15.462846)	(37.740992, -40.793181, -14.721211)
PP(8,18)	(35.480891, -43.376226, -15.467503)	(40.322905, -40.861088, -16.0659)	(35.520197, -43.458511, -15.339492)	(40.366872, -40.940951, -15.938464)	N/A
PP(9,0)	(39.499351, 0, -3.550071)	(44.396479, 0, -4.345622)	(39.542199, 0, -3.398704)	(44.444065, 0, -4.195025)	N/A
PP(9,1)	(39.50205, -2.541398, -3.600097)	(44.399958, -2.496329, -4.398096)	(39.546928, -2.547552, -3.441671)	(44.448506, -2.502277, -4.244604)	(42.965895, -2.515881, -4.004016)
PP(9,2)	(39.511488, -5.079689, -3.74337)	(44.409115, -4.988219, -4.555167)	(39.557871, -5.092418, -3.580004)	(44.459372, -5.000538, -4.396697)	(42.466579, -5.037468, -4.070013)
PP(9,3)	(39.527159, -7.611869, -3.981583)	(44.424129, -7.471308, -4.816576)	(39.575027, -7.631559, -3.81363)	(44.476084, -7.490385, -4.653466)	(42.317825, -7.551566, -4.291886)
PP(9,4)	(39.549051, -10.13489, -4.314613)	(44.444978, -9.941215, -5.181862)	(39.598371, -10.1619, -4.142506)	(44.498605, -9.967412, -5.01453)	(42.258024, -10.05457, -4.626857)
PP(9,5)	(39.577153, -12.645695, -4.742278)	(44.471631, -12.393584, -5.650379)	(39.627914, -12.680374, -4.566388)	(44.526912, -12.427244, -5.479234)	(42.238522, -12.542711, -5.066615)
PP(9,6)	(39.611439, -15.141218, -5.264344)	(44.504048, -14.824093, -6.221295)	(39.663763, -15.184006, -5.08461)	(44.56093, -14.86551, -6.046875)	(42.262893, -15.010949, -5.611851)
PP(9,7)	(39.651783, -17.616972, -5.879521)	(44.541981, -17.228571, -6.893594)	(39.705628, -17.667966, -5.696388)	(44.600429, -17.277802, -6.716328)	(42.295781, -17.456051, -6.255277)
PP(9,8)	(39.697679, -20.066464, -6.579622)	(44.5847, -19.604992, -7.660163)	(39.751674, -20.123741, -6.397684)	(44.644649, -19.661461, -7.480304)	(42.209253, -19.884922, -6.962059)
PP(9,9)	(39.748326, -22.491372, -7.352603)	(44.632117, -21.956008, -8.50191)	(39.802676, -22.554361, -7.171712)	(44.692762, -22.018557, -8.321795)	(42.216884, -22.282225, -7.760886)
PP(9,10)	(39.803757, -24.894324, -8.198859)	(44.683599, -24.27954, -9.416584)	(39.858504, -24.963047, -8.019097)	(44.74484, -24.347896, -9.237288)	(42.259223, -24.652248, -8.639524)
PP(9,11)	(39.863954, -27.273503, -9.118008)	(44.739119, -26.573311, -10.4033)	(39.919117, -27.347968, -8.939545)	(44.800933, -26.647445, -10.225128)	(42.31028, -26.995294, -9.591612)
PP(9,12)	(39.92888, -29.626738, -10.109507)	(44.798622, -28.835083, -11.461097)	(39.984469, -29.706931, -9.932546)	(44.861009, -28.914974, -11.28429)	(42.36691, -29.309457, -10.615716)
PP(9,13)	(39.998497, -31.951863, -11.172752)	(44.862048, -31.062646, -12.588942)	(40.054522, -32.03776, -10.997492)	(44.925019, -31.148278, -12.413704)	(42.42809, -31.592683, -11.710779)
PP(9,14)	(40.072761, -34.246713, -12.307077)	(44.929333, -33.253824, -13.785734)	(40.12923, -34.338282, -12.133728)	(44.992901, -33.345173, -13.61227)	(42.493442, -33.842873, -12.875841)
PP(9,15)	(40.151595, -36.509141, -13.511741)	(45.000358, -35.406488, -15.050287)	(40.208589, -36.60634, -13.340505)	(45.06454, -35.503531, -14.878792)	(42.563412, -36.057799, -14.110106)
PP(9,16)	(40.234419, -38.72586, -14.779198)	(45.074219, -37.51867, -16.381696)	(40.290168, -38.824876, -14.615262)	(45.139227, -37.62105, -16.211662)	(42.468378, -38.270358, -15.354588)
PP(9,17)	(40.319683, -40.85277, -16.073223)	(45.094939, -38.059581, -16.726058)	(40.364019, -40.937679, -15.948292)	(45.144077, -38.141682, -16.601783)	N/A
PP(10,0)	(44.397459, 0, -4.342522)	(49.285904, 0, -5.187473)	(44.44498, 0, -4.19213)	(49.338682, 0, -5.03799)	N/A
PP(10,1)	(44.399977, -2.546453, -4.39994)	(49.289122, -2.495715, -5.247705)	(44.450165, -2.553528, -4.241295)	(49.343172, -2.50252, -5.094809)	(47.850034, -2.517962, -4.837071)
PP(10,2)	(44.40924, -5.088854, -4.564264)	(49.297094, -4.985594, -5.427906)	(44.461446, -5.103577, -4.39981)	(49.353389, -4.999768, -5.269247)	(47.364937, -5.041384, -4.922207)
PP(10,3)	(44.424612, -7.62329, -4.837374)	(49.310058, -7.463904, -5.727689)	(44.478818, -7.646181, -4.667602)	(49.368588, -7.485961, -5.563744)	(47.220985, -7.554986, -5.179947)
PP(10,4)	(44.446081, -10.145791, -5.219095)	(49.327991, -9.924894, -6.14636)	(44.502273, -10.17734, -5.044519)	(49.388732, -9.955309, -5.977692)	(47.165583, -10.053913, -5.566238)
PP(10,5)	(44.47363, -12.652364, -5.70917)	(49.350858, -12.362857, -6.682952)	(44.531782, -12.693021, -5.530383)	(49.413772, -12.402053, -6.510198)	(47.148398, -12.533297, -6.071823)
PP(10,6)	(44.507226, -15.139012, -6.307256)	(49.378615, -14.772144, -7.336214)	(44.567503, -15.189334, -6.124292)	(49.443669, -14.820489, -7.160029)	(47.170299, -14.986993, -6.696621)
PP(10,7)	(44.546695, -17.600254, -7.0115)	(49.410969, -17.147325, -8.104604)	(44.609399, -17.660692, -6.823908)	(49.478189, -17.204918, -7.925406)	(47.222649, -17.408561, -7.437949)
PP(10,8)	(44.591441, -20.028392, -7.810113)	(49.447037, -19.485753, -8.979823)	(44.654696, -20.09632, -7.623402)	(49.516599, -19.552017, -8.797215)	(47.133226, -19.80957, -8.246763)
PP(10,9)	(44.640507, -22.426785, -8.685604)	(49.48728, -21.791847, -9.937715)	(44.7047, -22.5016, -8.499165)	(49.558621, -21.865759, -9.753044)	(47.115266, -22.174845, -9.148659)
PP(10,10)	(44.693889, -24.799317, -9.638654)	(49.530849, -24.06331, -10.974931)	(44.759031, -24.881063, -9.452775)	(49.603566, -24.14433, -10.790198)	(47.14635, -24.505389, -10.139914)
PP(10,11)	(44.751585, -27.14422, -10.668949)	(49.577693, -26.297412, -12.090227)	(44.817659, -27.2329, -10.483998)	(49.651795, -26.385599, -11.905775)	(47.181894, -26.804161, -11.208598)
PP(10,12)	(44.813562, -29.459131, -11.775939)	(49.627756, -28.491467, -13.28226)	(44.880562, -29.554741, -11.592261)	(49.703261, -28.586878, -13.09841)	(47.221612, -29.068755, -12.353704)
PP(10,13)	(44.879785, -31.741674, -12.959015)	(49.680975, -30.642835, -14.549594)	(44.947717, -31.844215, -12.776925)	(49.757897, -30.745508, -14.366691)	(47.266478, -31.296518, -13.574569)

DOME PURLIN GEOMETRY

NAME	C1(ft)	C2(ft)	C3(ft)	C4(ft)	IP(ft)
PP(10,14)	(44.950226, -33.991324, -14.218755)	(49.738575, -32.750792, -15.887282)	(45.032091, -34.122253, -14.005165)	(49.815529, -32.859466, -15.709423)	(47.925136, -33.333772, -15.075283)
PP(10,15)	(45.090219, -38.049503, -16.736209)	(49.821902, -35.021181, -17.38144)	(45.13964, -38.135727, -16.614191)	(49.876571, -35.104046, -17.260137)	N/A
PP(11,0)	(49.287187, 0, -5.183838)	(54.167725, 0, -6.069395)	(49.339896, 0, -5.034549)	(54.226667, 0, -5.921237)	N/A
PP(11,1)	(49.289083, -2.550282, -5.250055)	(54.170183, -2.494961, -6.138569)	(49.345299, -2.558481, -5.091125)	(54.230709, -2.502785, -5.986665)	(52.792193, -2.519022, -5.726071)
PP(11,2)	(49.297022, -5.09519, -5.439348)	(54.175398, -4.982239, -6.345423)	(49.355894, -5.112348, -5.273754)	(54.238722, -4.998597, -6.187293)	(52.314801, -5.042655, -5.834611)
PP(11,3)	(49.310192, -7.629542, -5.753829)	(54.183682, -7.454291, -6.689375)	(49.371681, -7.656329, -5.582313)	(54.249838, -7.47983, -6.52558)	(52.160217, -7.553666, -6.13271)
PP(11,4)	(49.328579, -10.148075, -6.193222)	(54.195021, -9.903561, -7.169382)	(49.392628, -10.185087, -6.016629)	(54.264016, -9.938875, -7.000607)	(52.087861, -10.045689, -6.575988)
PP(11,5)	(49.352163, -12.645492, -6.757122)	(54.209389, -12.322565, -7.783984)	(49.418694, -12.693227, -6.576409)	(54.281242, -12.368191, -7.610951)	(52.04737, -12.512554, -7.154202)
PP(11,6)	(49.380903, -15.11648, -7.444987)	(54.226753, -14.703922, -8.531309)	(49.450013, -15.175476, -7.26067)	(54.301497, -14.760329, -8.354748)	(52.036251, -14.947016, -7.865932)
PP(11,7)	(49.414615, -17.554809, -8.254582)	(54.246908, -17.040513, -9.408987)	(49.487874, -17.626842, -8.06323)	(54.324736, -17.10805, -9.229219)	(52.123087, -17.334057, -8.725003)
PP(11,8)	(49.452786, -19.95334, -9.172075)	(54.269058, -19.32788, -10.409372)	(49.52808, -20.035719, -8.979246)	(54.350006, -19.405804, -10.226561)	(52.090737, -19.688029, -9.67188)
PP(11,9)	(49.494633, -22.317116, -10.175597)	(54.294284, -21.569695, -11.508979)	(49.572267, -22.409071, -9.981224)	(54.379639, -21.658799, -11.320174)	(52.015038, -22.011511, -10.695465)
PP(11,10)	(49.540056, -24.649525, -11.265764)	(54.321757, -23.762615, -12.703124)	(49.620027, -24.751224, -11.07044)	(54.411129, -23.862531, -12.510698)	(51.994366, -24.290978, -11.821529)
PP(11,11)	(49.589058, -26.948698, -12.442595)	(54.351428, -25.902658, -13.989613)	(49.671335, -27.060279, -12.247015)	(54.444714, -26.01356, -13.794626)	(51.991095, -26.52798, -13.039613)
PP(11,12)	(49.641619, -29.211997, -13.705813)	(54.383244, -27.98595, -15.366087)	(49.726158, -29.33354, -13.510719)	(54.480346, -28.107937, -15.169609)	(52.000608, -28.719541, -14.347686)
PP(11,13)	(49.697573, -31.434265, -15.053687)	(54.418967, -30.011729, -16.825773)	(49.797446, -31.58598, -14.830728)	(54.517655, -30.142265, -16.633222)	(52.447634, -30.738464, -15.895657)
PP(11,14)	(49.796163, -34.976634, -17.434154)	(54.477851, -31.707501, -18.066691)	(49.851225, -35.068056, -17.318306)	(54.539613, -31.794245, -17.951749)	N/A
PP(12,0)	(54.169194, 0, -6.065702)	(59.060373, 0, -6.985706)	(54.228067, 0, -5.917718)	(59.094424, 0, -6.833053)	N/A
PP(12,1)	(54.170046, -2.552585, -6.141451)	(59.060967, -2.493881, -7.064851)	(54.232916, -2.561943, -5.983841)	(59.09612, -2.50324, -6.907561)	(57.500443, -2.522292, -6.607987)
PP(12,2)	(54.174973, -5.098017, -6.359334)	(59.061325, -4.977694, -7.3016)	(54.241106, -5.117682, -6.194718)	(59.098457, -4.997449, -7.136589)	(57.035847, -5.047519, -6.744842)
PP(12,3)	(54.183127, -7.629379, -6.721188)	(59.061658, -7.441551, -7.695031)	(54.252614, -7.660244, -6.550224)	(59.100745, -7.472611, -7.523376)	(56.9233, -7.554603, -7.098868)
PP(12,4)	(54.194495, -10.139655, -7.226559)	(59.061967, -9.875577, -8.243569)	(54.267432, -10.182579, -7.049991)	(59.102989, -9.91874, -8.06644)	(56.893467, -10.035212, -7.618702)
PP(12,5)	(54.20906, -12.621774, -7.874777)	(59.062254, -12.270015, -8.94502)	(54.285473, -12.677509, -7.693619)	(59.105186, -12.325943, -8.763697)	(56.893152, -12.480929, -8.293154)
PP(12,6)	(54.226786, -15.068641, -8.664949)	(59.062517, -14.615287, -9.796595)	(54.306551, -15.137659, -8.480625)	(59.107379, -14.684514, -9.612233)	(56.894917, -14.884265, -9.114827)
PP(12,7)	(54.247562, -17.473797, -9.595118)	(59.062786, -16.902116, -10.794901)	(54.332, -17.557664, -9.40564)	(59.109881, -16.985341, -10.607498)	(56.942487, -17.232299, -10.090695)
PP(12,8)	(54.271282, -19.835652, -10.655517)	(59.063216, -19.121564, -11.935952)	(54.363559, -19.938139, -10.454658)	(59.113809, -19.221097, -11.741736)	(57.010342, -19.520247, -11.207432)
PP(12,9)	(54.297548, -22.159805, -11.827584)	(59.063805, -21.26456, -13.215461)	(54.397035, -22.280454, -11.618928)	(59.120254, -21.385835, -13.006993)	(56.900603, -21.77996, -12.399525)
PP(12,10)	(54.326308, -24.444746, -13.11101)	(59.064575, -23.322549, -14.627987)	(54.432683, -24.583941, -12.896968)	(59.127919, -23.4684, -14.405506)	(56.809643, -23.983553, -13.714461)
PP(12,11)	(54.357495, -26.687871, -14.507662)	(59.065727, -25.287435, -16.167616)	(54.470229, -26.845657, -14.291181)	(59.135917, -25.458832, -15.934854)	(56.758327, -26.119689, -15.158668)
PP(12,12)	(54.390856, -28.871991, -16.008762)	(59.068434, -27.155334, -17.824493)	(54.513197, -29.052619, -15.784931)	(59.144241, -27.34862, -17.587916)	(56.829237, -28.142756, -16.756008)
PP(12,13)	(54.439484, -31.644839, -18.130551)	(59.089604, -28.151931, -18.688129)	(54.501622, -31.743468, -18.024674)	(59.1298, -28.267042, -18.579621)	N/A
PP(13,0)	(59.06026, 0, -6.986213)	(64.014332, 0, -7.905297)	(59.094316, 0, -6.833535)	(64.04126, 0, -7.751296)	N/A
PP(13,1)	(59.060533, -2.554089, -7.069631)	(64.01475, -2.493273, -7.987858)	(59.094886, -2.564055, -6.916165)	(64.04206, -2.503395, -7.832017)	N/A
PP(13,2)	(59.060631, -5.097489, -7.319075)	(64.014992, -4.975621, -8.234962)	(59.094942, -5.117355, -7.167197)	(64.042668, -4.996115, -8.078301)	N/A
PP(13,3)	(59.060573, -7.619627, -7.73346)	(64.0152, -7.436224, -8.645554)	(59.095033, -7.649312, -7.583158)	(64.043416, -7.467336, -8.488054)	N/A
PP(13,4)	(59.06039, -10.110017, -8.311015)	(64.015372, -9.864326, -9.217841)	(59.095161, -10.149497, -8.162429)	(64.044283, -9.906368, -9.059641)	N/A
PP(13,5)	(59.060144, -12.558362, -9.049202)	(64.015507, -12.249309, -9.949318)	(59.095325, -12.60759, -8.902758)	(64.045246, -12.302619, -9.79076)	N/A
PP(13,6)	(59.060556, -17.291672, -10.991763)	(64.015762, -16.848367, -11.876348)	(59.096038, -17.358906, -10.854211)	(64.04725, -16.924788, -11.720039)	(59.348152, -17.336334, -10.899253)
PP(13,8)	(59.060644, -19.565514, -12.197181)	(64.016557, -19.038598, -13.069409)	(59.10339, -19.657357, -12.03932)	(64.049481, -19.129023, -12.914046)	(61.768831, -19.365159, -12.523542)
PP(14,0)	(64.012752, 0, -7.914335)	(68.98833, 0, -8.710634)	(64.039679, 0, -7.760336)	(69.007335, 0, -8.555367)	N/A
PP(14,1)	(64.010267, -2.542754, -8.015889)	(68.988523, -2.493538, -8.790086)	(64.041588, -2.553638, -7.837353)	(69.008073, -2.50326, -8.630684)	N/A
PP(14,2)	(64.007714, -5.071433, -8.288637)	(68.988632, -4.97695, -9.027978)	(64.041656, -5.095057, -8.096837)	(69.008787, -4.997055, -8.864805)	N/A
PP(14,3)	(64.005131, -7.573969, -8.730672)	(68.988721, -7.440203, -9.423361)	(64.041747, -7.611972, -8.526671)	(69.009542, -7.471226, -9.256875)	N/A
PP(14,4)	(64.002525, -10.038548, -9.339374)	(68.988789, -9.873316, -9.974636)	(64.041859, -10.092462, -9.1245)	(69.010305, -9.915736, -9.805613)	N/A
PP(14,5)	(63.999925, -12.453679, -10.11112)	(68.988834, -12.266428, -10.679572)	(64.041993, -12.524852, -9.887067)	(69.011068, -12.320654, -10.508911)	N/A
PP(14,6)	(63.997434, -14.808347, -11.041097)	(68.988857, -14.609822, -11.535288)	(64.042153, -14.897818, -10.810263)	(69.011806, -14.676168, -11.364153)	N/A
PP(14,7)	(63.997476, -17.097857, -12.113634)	(68.988971, -16.893602, -12.537987)	(64.042425, -17.202132, -11.890906)	(69.012436, -16.972525, -12.369434)	N/A
PP(14,8)	(64.004364, -19.324463, -13.319045)	(68.989568, -19.10032, -13.697021)	(64.042895, -19.428787, -13.139907)	(69.012145, -19.189501, -13.543899)	N/A
PP(15,0)	(68.987378, 0, -8.718417)	(73.994353, 0, -9.282815)	(69.00637, 0, -8.563252)	(74.004789, 0, -9.126686)	N/A
PP(15,1)	(68.985977, -2.527269, -8.812425)	(73.994391, -2.493784, -9.359348)	(69.007488, -2.537631, -8.637201)	(74.005092, -2.503236, -9.199543)	N/A
PP(15,2)	(68.984543, -5.042064, -9.069197)	(73.994408, -4.978156, -9.588599)	(69.007523, -5.064267, -8.883502)	(74.005348, -4.997565, -9.426296)	N/A
PP(15,3)	(68.98309, -7.533466, -9.487206)	(73.994418, -7.443805, -9.969712)	(69.007569, -7.568776, -9.291955)	(74.00562, -7.473524, -9.805405)	N/A
PP(15,4)	(68.981618, -9.990734, -10.064289)	(73.994419, -9.881456, -10.501256)	(69.007627, -10.040339, -9.860549)	(74.005897, -9.921788, -10.335625)	N/A
PP(15,5)	(68.980139, -12.403372, -10.797407)	(73.994411, -12.281937, -11.181233)	(69.007697, -12.468332, -10.586496)	(74.006179, -12.333145, -11.014991)	N/A
PP(15,6)	(68.978621, -14.761019, -11.683132)	(73.994395, -14.636199, -12.00707)	(69.007781, -14.842402, -11.466265)	(74.006459, -14.698489, -11.841099)	N/A
PP(15,7)	(68.977725, -17.055874, -12.713866)	(73.994399, -16.934919, -12.975393)	(69.007938, -17.153797, -12.497551)	(74.006692, -17.008899, -12.811981)	N/A
PP(15,8)	(68.979663, -19.279536, -13.891451)	(73.994508, -19.158107, -14.101369)	(69.008268, -19.388753, -13.699657)	(74.006654, -19.245041, -13.948711)	N/A
PP(16,0)	(73.994026, 0, -9.287703)	(79.028551, 0, -9.500137)	(74.004454, 0, -9.131689)	(79.028551, 0, -9.343683)	N/A
PP(16,1)	(73.993653, -2.506127, -9.370867)	(79.028551, -2.493917, -9.574987)	(74.004821, -2.515895, -9.20424)	(79.028551, -2.503246, -9.415853)	N/A
PP(16,2)	(73.993274, -5.001784, -9.608183)	(79.028551, -4.978821, -9.799244)	(74.004834, -5.022078, -9.437022)	(79.028551, -4.997748, -9.639614)	N/A
PP(16,3)	(73.992894, -7.477295, -9.998527)	(79.028551, -7.445804, -10.172101)	(74.004851, -7.508665, -9.823654)	(79.028551, -7.47442, -10.012589)	N/A
PP(16,4)	(73.992513, -9.923071, -10.540226)	(79.028551, -9.885989, -10.692217)	(74.004874, -9.966001, -10.362514)	(79.028551, -9.924328, -10.533517)	N/A
PP(16,5)	(73.992137, -12.329707, -11.230853)	(79.028551, -12.290592, -11.35772)	(74.004903, -12.38457, -11.051346)	(79.028551, -12.338639, -11.20052)	N/A
PP(16,6)	(73.991814, -14.688189, -12.066847)	(79.028551, -14.650942, -12.166195)	(74.004937, -14.75507, -11.887292)	(79.028551, -14.70863, -12.011323)	N/A
PP(16,7)	(73.991826, -16.985096, -13.054759)	(79.028551, -16.95822, -13.114704)	(74.004987, -17.068622, -12.867694)	(79.028551, -17.025377, -12.9643)	N/A
PP(16,8)	(73.992093, -19.217795, -14.173834)	(79.028551, -19.190988, -14.220939)	(74.005117, -19.30888, -14.012851)	(79.028551, -19.276455, -14.069886)	N/A

DESIGN BY:										
DRAWN BY:		4	7/3/2023	ISSUED FOR BID						
CHECKED BY:										
APPROVED BY:		0	9/9/2022	ISSUED FOR PERMIT	MN	ZT	SD			
CDOT/APPROVED BY:		NO.	DATE	REVISIONS	DES.	DRW.	CHK.	DCCO	CDOT	

TranSystems
TRANSYSTEMS
222 SOUTH RIVERSIDE PLAZA SUITE 610
CHICAGO, ILLINOIS 60606

SOM
SKIDMORE, OWINGS & MERRILL LLP
224 SOUTH MICHIGAN AVENUE, SUITE 1000
CHICAGO, ILLINOIS 60604

CDOT
CHICAGO DEPARTMENT OF TRANSPORTATION
DIVISION OF ENGINEERING

STATE / LAKE LOOP ELEVATED STATION
200 NORTH STATE STREET, CHICAGO, IL 60601

SPEC. NO.

DOME PURLIN GEOMETRY CHART

DRAWING NO.
A-509

CDOT PROJECT D-1-209

DATE: 9/9/2022

REVISION NO.

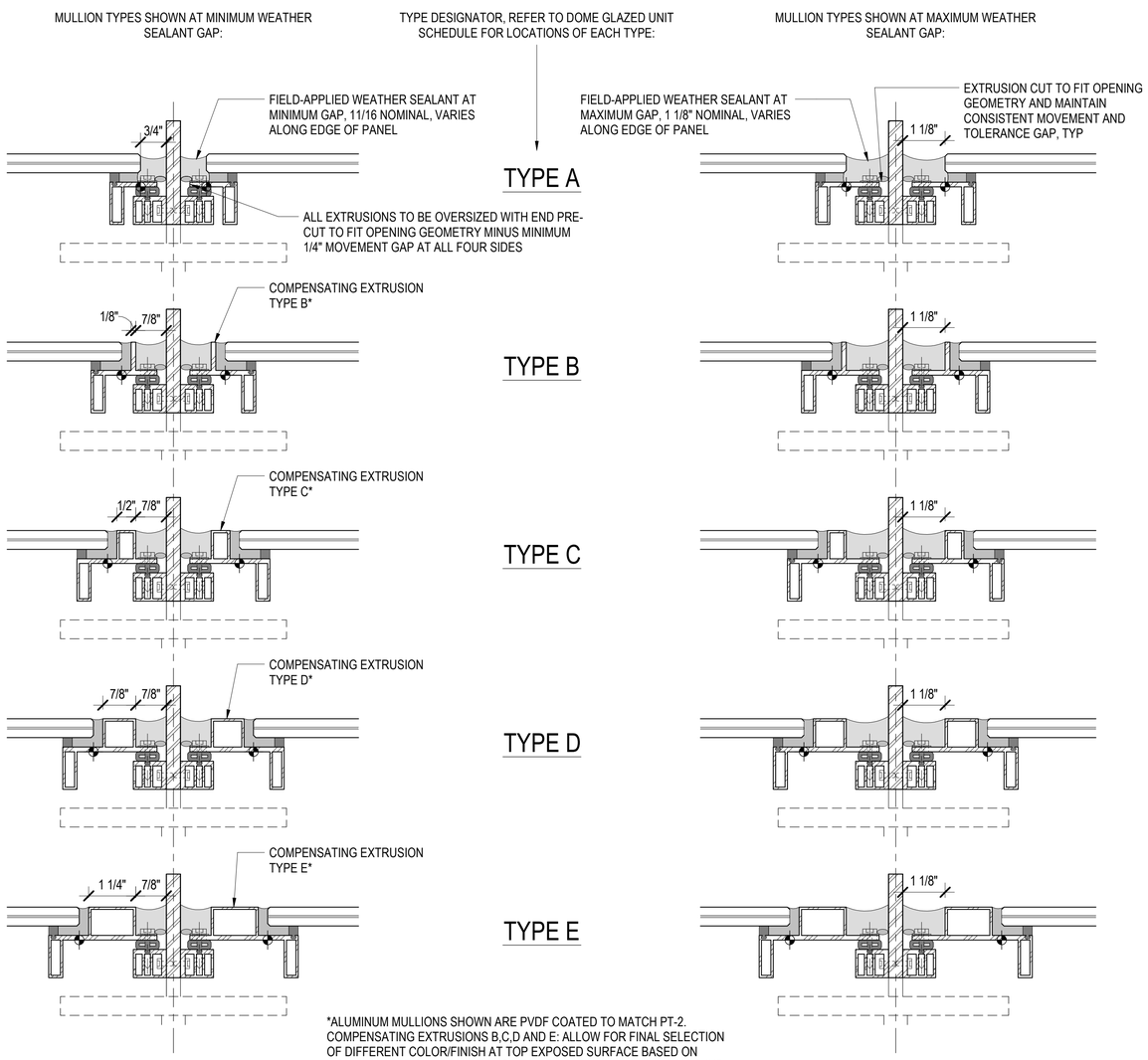

*ALUMINUM MULLIONS SHOWN ARE PVDF COATED TO MATCH PT-2. COMPENSATING EXTRUSIONS B,C,D AND E: ALLOW FOR FINAL SELECTION OF DIFFERENT COLOR/FINISH AT TOP EXPOSED SURFACE BASED ON VISUAL SELECTION FROM A RANGE TO BE DETERMINED DURING MOCKUP REVIEW PROCESS

4 SECTION DETAIL - COMPENSATING MULLION TYPES
6" = 1'-0"

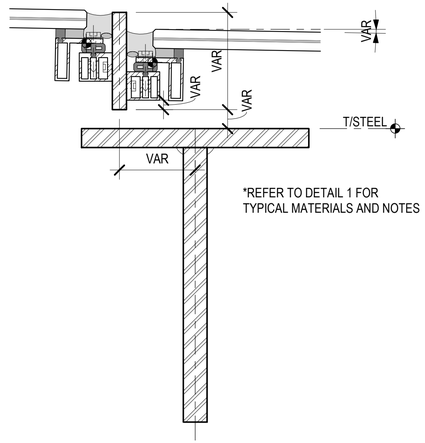

*REFER TO DETAIL 1 FOR TYPICAL MATERIALS AND NOTES

2 SECTION DETAIL - TYP DOME PURLIN
6" = 1'-0"

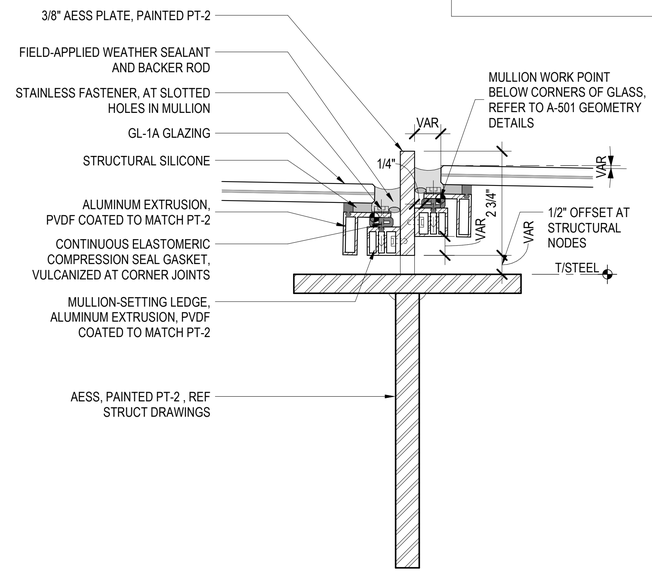

1 SECTION DETAIL - TYP DOME RAFTER
6" = 1'-0"

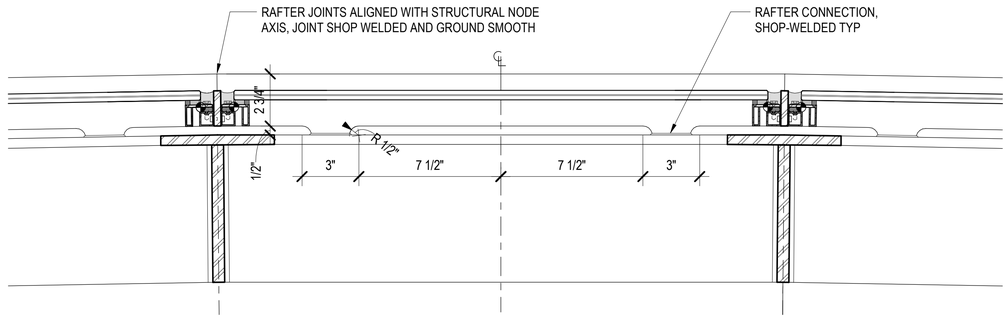

3 ELEVATION DETAIL - TYP RAFTER
3" = 1'-0"

DESIGN BY:										
DRAWN BY:		4	7/3/2023	ISSUED FOR BID						
CHECKED BY:										
APPROVED BY:		0	9/9/2022	ISSUED FOR PERMIT	MN	KH	SD			
CDOT/APPROVED BY:		NO.	DATE	REVISIONS	DES.	DRW.	CHK.	DCCO	CDOT	

TRANSYSTEMS
222 SOUTH RIVERSIDE PLAZA SUITE 610
CHICAGO, ILLINOIS 60606

SKIDMORE, OWINGS & MERRILL LLP
224 SOUTH MICHIGAN AVENUE, SUITE 1000
CHICAGO, ILLINOIS 60604

CHICAGO DEPARTMENT OF TRANSPORTATION
DIVISION OF ENGINEERING

STATE / LAKE LOOP ELEVATED STATION
200 NORTH STATE STREET, CHICAGO, IL 60601

DOME ENCLOSURE DETAILS

CDOT PROJECT D-1-209

DATE: 9/9/2022

SPEC. NO.

DRAWING NO. A-511

REVISION NO.

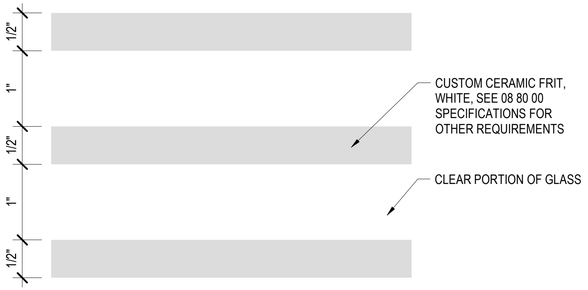

NOTE: UNLESS SHOWN OTHERWISE, LINEAR PATTERN RUNS IN THE EAST-WEST DIRECTION ON THE DOME, BARREL VAULT, FLYOVER BRIDGE ROOF AND WINDBREAKS; LINEAR PATTERN TO RUN PERPENDICULAR TO THE PATH OF TRAVEL ON EXIT STAIR ROOFS AND FEATURE STAIR CANOPIES.

5 GL-1A TYP FRIT PATTERN
12" = 1'-0"

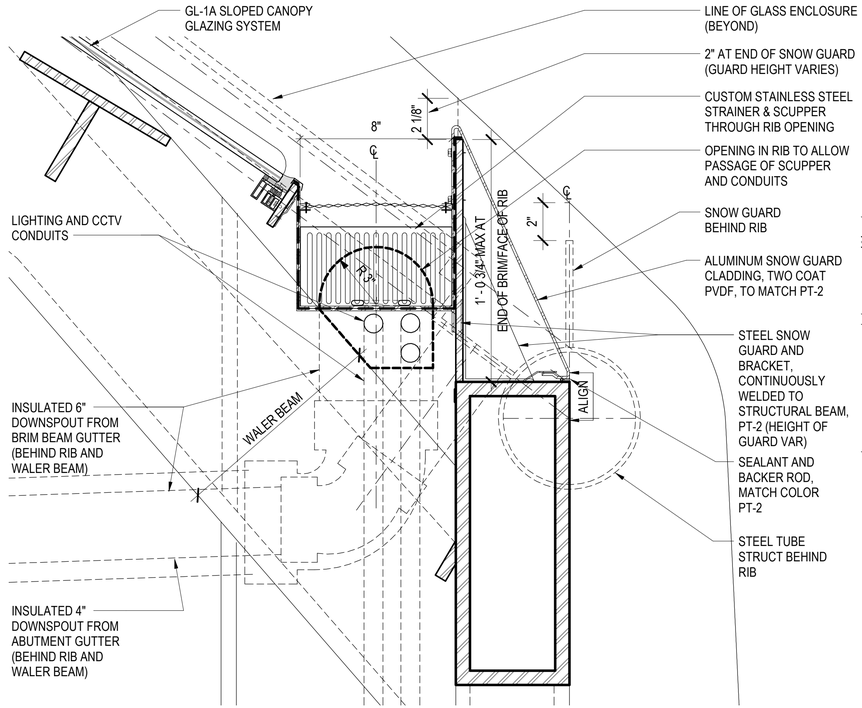

3 SECTION DETAIL - DOME GUTTER AT WALER
3" = 1'-0"

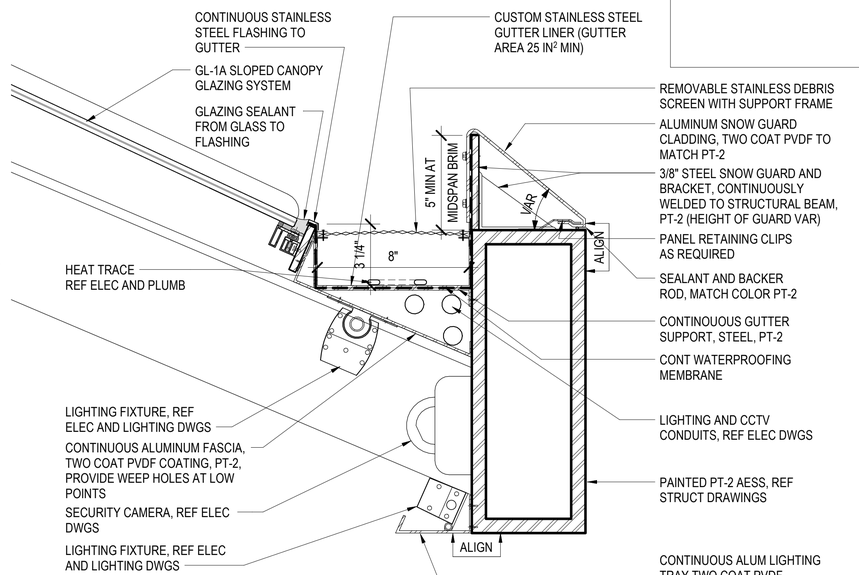

1 SECTION DETAIL
3" = 1'-0"

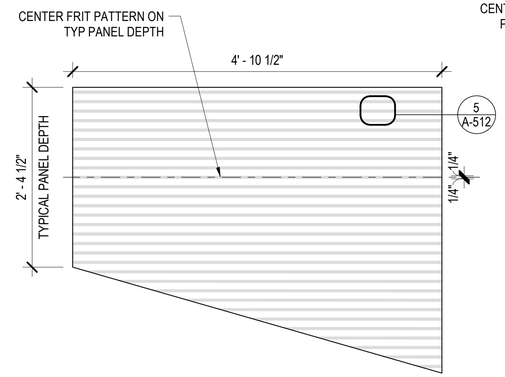

7 GL-1A ATYP DOME PANEL
1" = 1'-0"

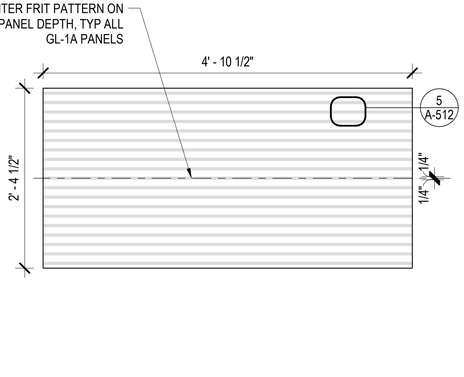

6 GL-1A TYP DOME PANEL
1" = 1'-0"

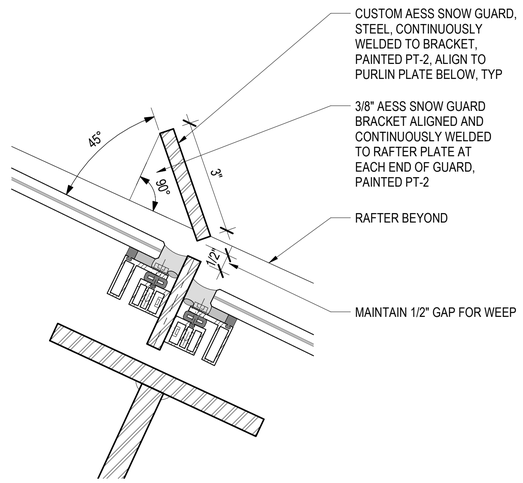

4 SECTION DETAIL
6" = 1'-0"

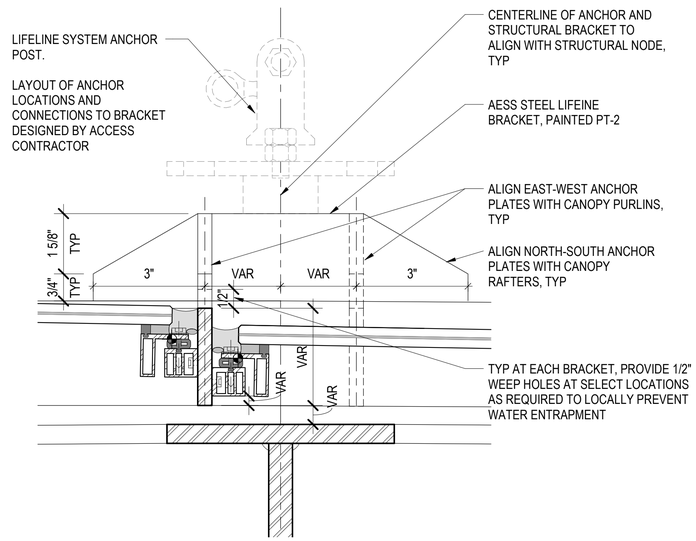

2 SECTION DETAIL
6" = 1'-0"

DESIGN BY:										
DRAWN BY:		4	7/3/2023	ISSUED FOR BID						
CHECKED BY:										
APPROVED BY:		0	9/9/2022	ISSUED FOR PERMIT	MN	KH	SD			
CDOT/APPROVED BY:		NO.	DATE	REVISIONS	DES.	DRW.	CHK.	DCCO	CDOT	

TRANSYSTEMS
222 SOUTH RIVERSIDE PLAZA SUITE 610
CHICAGO, ILLINOIS 60606

SKIDMORE, OWINGS & MERRILL LLP
224 SOUTH MICHIGAN AVENUE, SUITE 1000
CHICAGO, ILLINOIS 60604

CHICAGO DEPARTMENT OF TRANSPORTATION
DIVISION OF ENGINEERING

STATE / LAKE LOOP ELEVATED STATION
200 NORTH STATE STREET, CHICAGO, IL 60601

SPEC. NO.

DOME ENCLOSURE DETAILS

DRAWING NO. A-512

CDOT PROJECT D-1-209 | DATE: 9/9/2022 | REVISION NO.

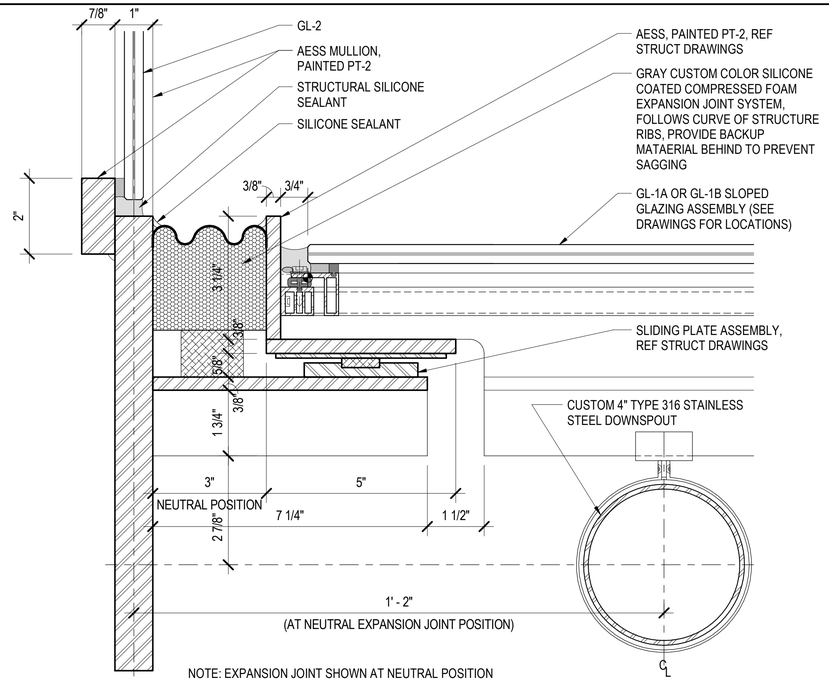

6 SECTION DETAIL
6" = 1'-0"

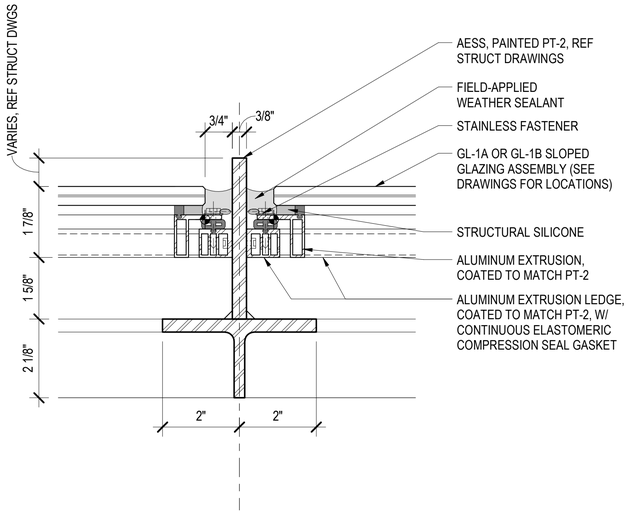

3 SECTION DETAIL
6" = 1'-0"

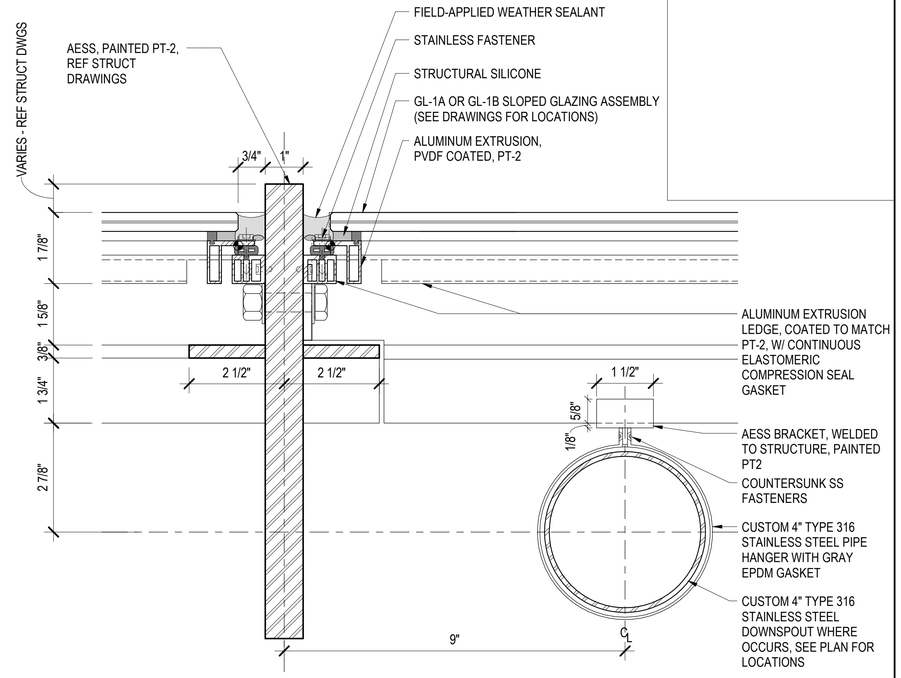

1 SECTION DETAIL
6" = 1'-0"

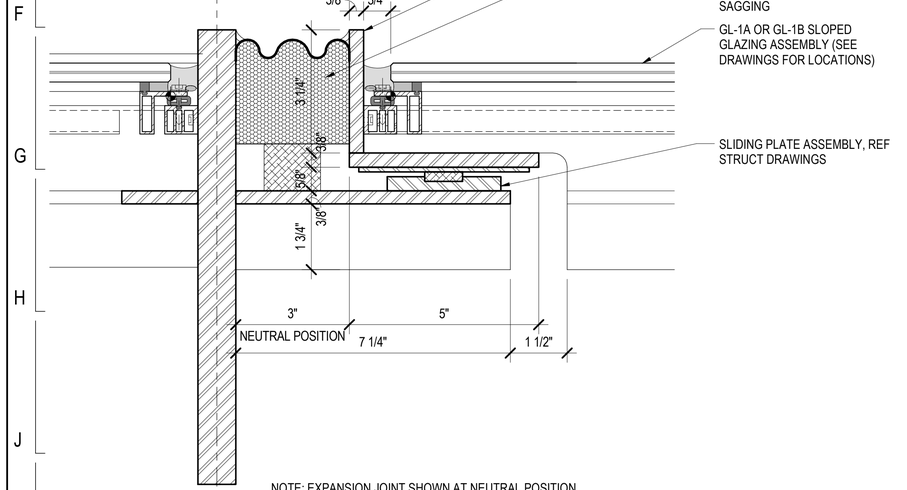

7 SECTION DETAIL
6" = 1'-0"

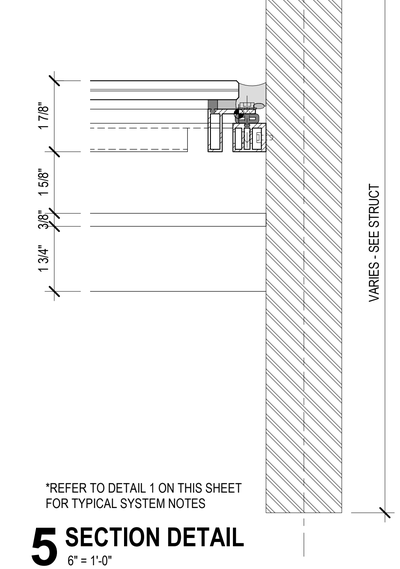

5 SECTION DETAIL
6" = 1'-0"

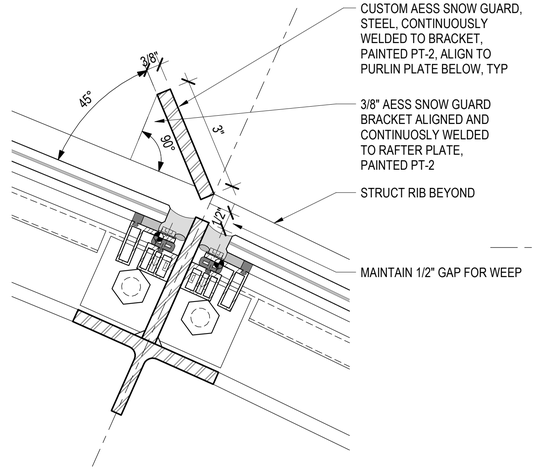

4 SECTION DETAIL
6" = 1'-0"

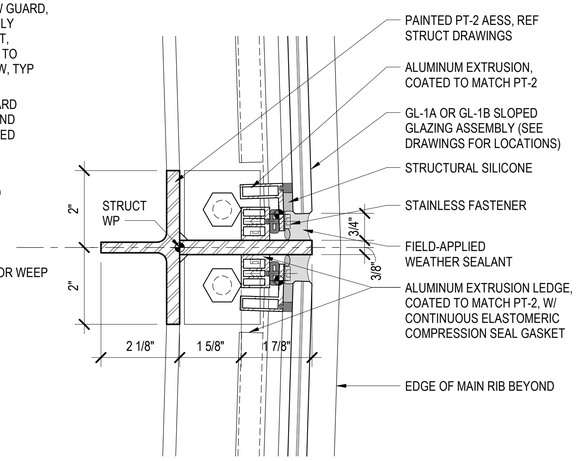

2 SECTION DETAIL
6" = 1'-0"

DESIGN BY:										
DRAWN BY:		4	7/3/2023	ISSUED FOR BID						
CHECKED BY:										
APPROVED BY:		0	9/9/2022	ISSUED FOR PERMIT	MN	KH	SD			
CDOT/APPROVED BY:		NO.	DATE	REVISIONS	DES.	DRW.	CHK.	DCCO	CDOT	

TRANSYSTEMS
222 SOUTH RIVERSIDE PLAZA SUITE 610
CHICAGO, ILLINOIS 60606

SKIDMORE, OWINGS & MERRILL LLP
224 SOUTH MICHIGAN AVENUE, SUITE 1000
CHICAGO, ILLINOIS 60604

CHICAGO DEPARTMENT OF TRANSPORTATION
DIVISION OF ENGINEERING

STATE / LAKE LOOP ELEVATED STATION
200 NORTH STATE STREET, CHICAGO, IL 60601

SPEC. NO.

VAULT ENCLOSURE DETAILS

DRAWING NO. A-515

CDOT PROJECT D-1-209 | DATE: 9/9/2022 | REVISION NO.

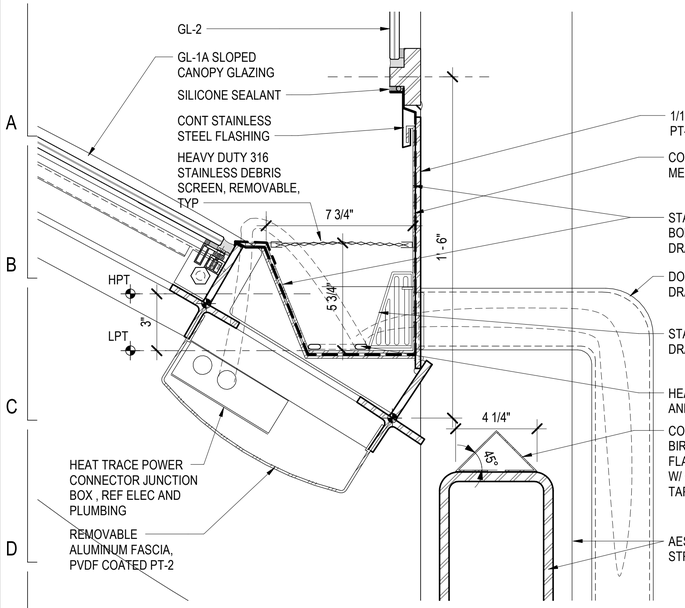

3 SECTION DETAIL
3" = 1'-0"

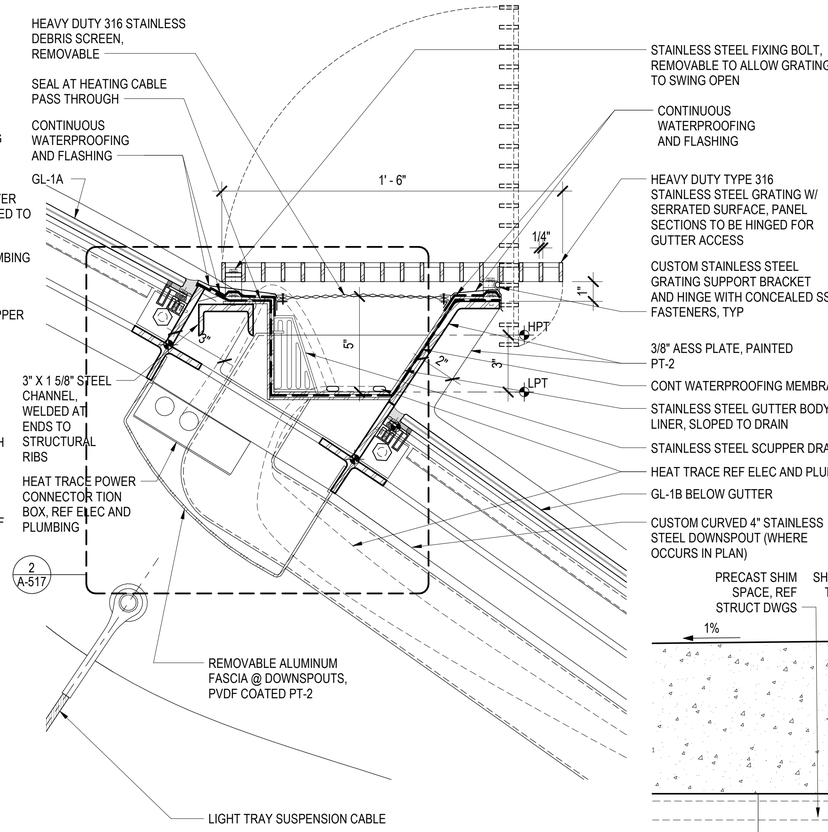

2 SECTION DETAIL
3" = 1'-0"

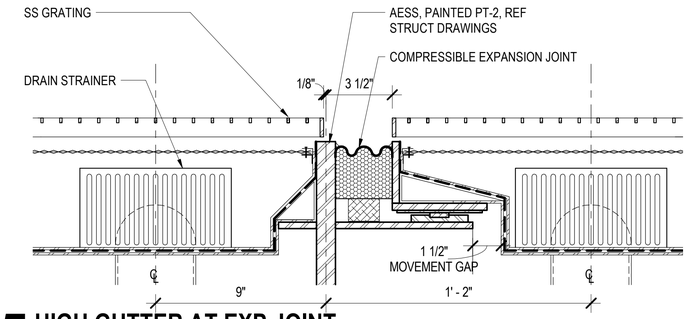

5 HIGH GUTTER AT EXP JOINT
3" = 1'-0"

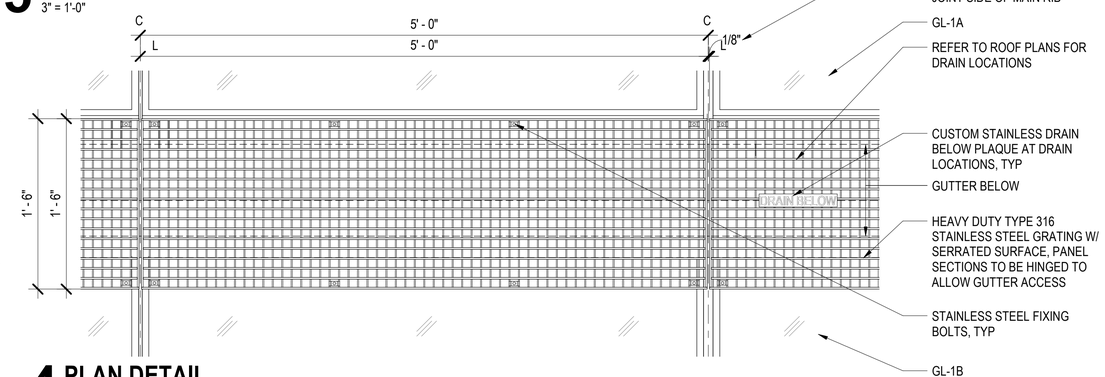

4 PLAN DETAIL
1 1/2" = 1'-0"

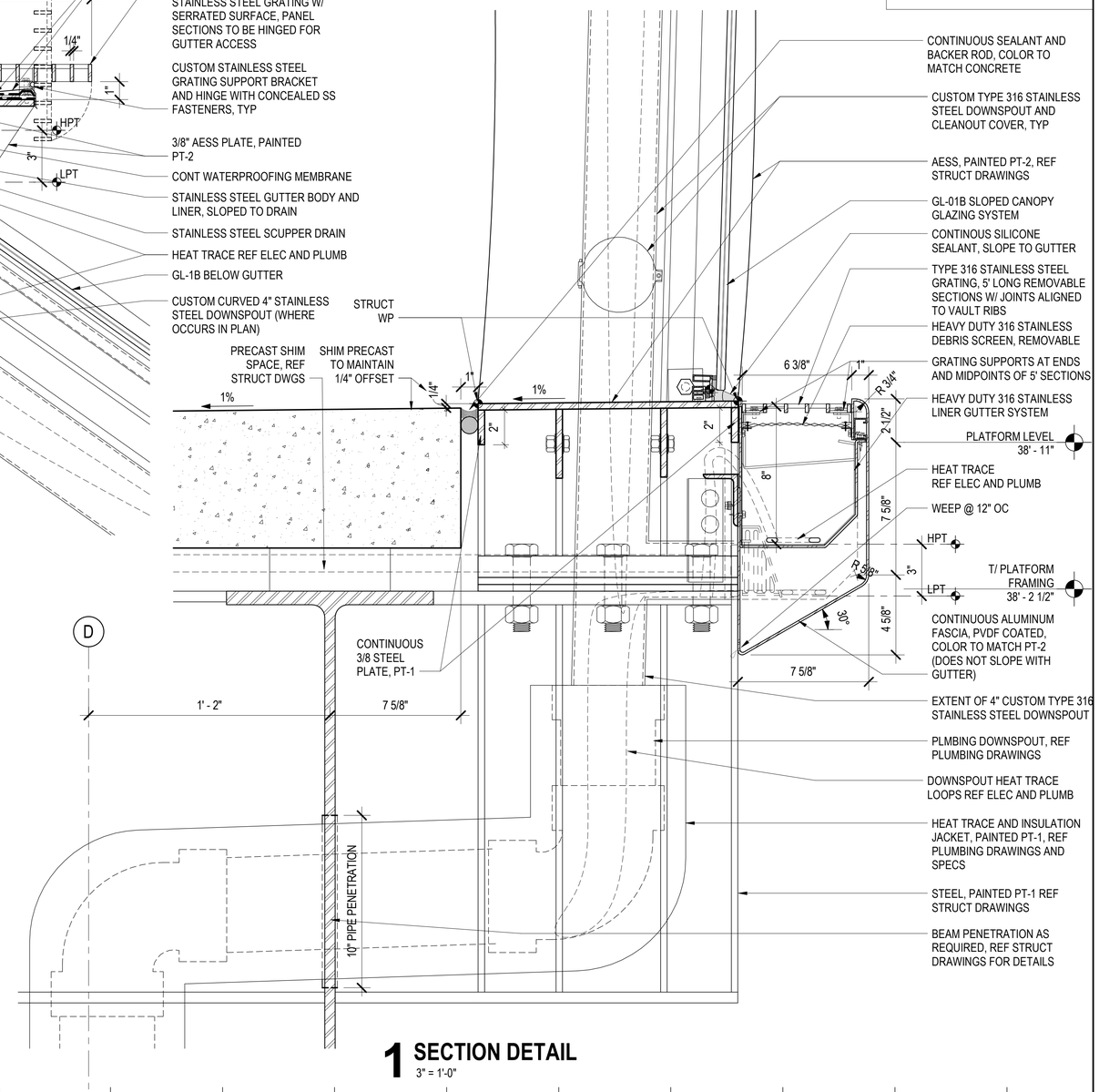

1 SECTION DETAIL
3" = 1'-0"

DESIGN BY:										
DRAWN BY:		4	7/3/2023	ISSUED FOR BID						
CHECKED BY:										
APPROVED BY:		0	9/9/2022	ISSUED FOR PERMIT	MN	KH	SD			
CDOT/APPROVED BY:		NO.	DATE	REVISIONS	DES.	DRW.	CHK.	DCCO	CDOT	

TRANSYSTEMS
222 SOUTH RIVERSIDE PLAZA SUITE 610
CHICAGO, ILLINOIS 60606

SKIDMORE, OWINGS & MERRILL LLP
224 SOUTH MICHIGAN AVENUE, SUITE 1000
CHICAGO, ILLINOIS 60604

CHICAGO DEPARTMENT OF TRANSPORTATION
DIVISION OF ENGINEERING

STATE / LAKE LOOP ELEVATED STATION
200 NORTH STATE STREET, CHICAGO, IL 60601

SPEC. NO.

VAULT ENCLOSURE DETAILS

DRAWING NO. A-516

CDOT PROJECT D-1-209 | DATE: 9/9/2022 | REVISION NO.

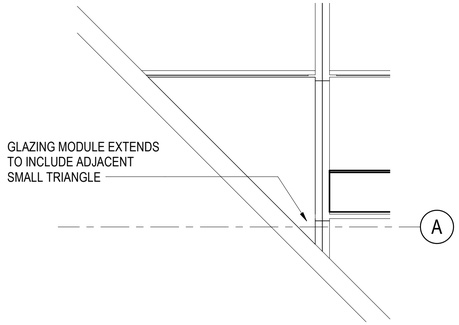

6 PLAN DETAIL - SPECIAL CONDITIONS-W1
1 1/2" = 1'-0"

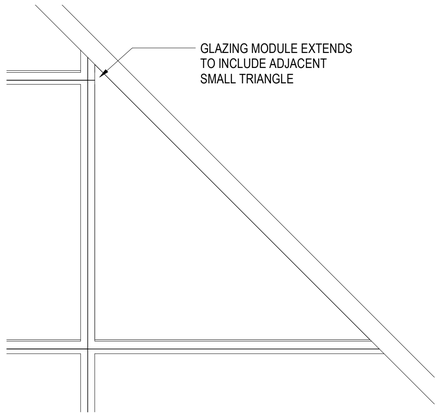

4 PLAN DETAIL - SPECIAL CONDITIONS-E1
1 1/2" = 1'-0"

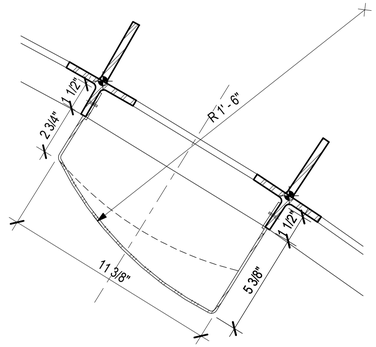

2 SECTION DETAIL @ DOWNSPOUT FASCIA
3" = 1'-0"

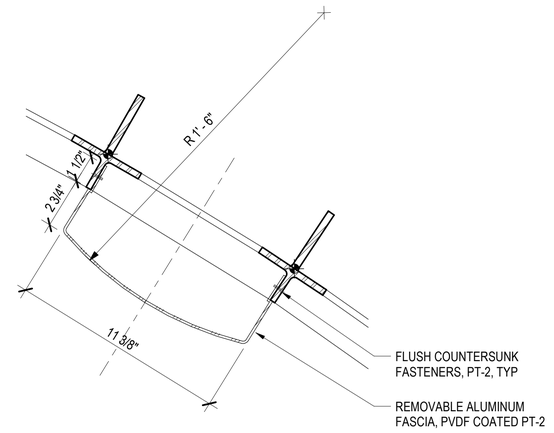

1 SECTION DETAIL @ TYP GUTTER FASCIA
3" = 1'-0"

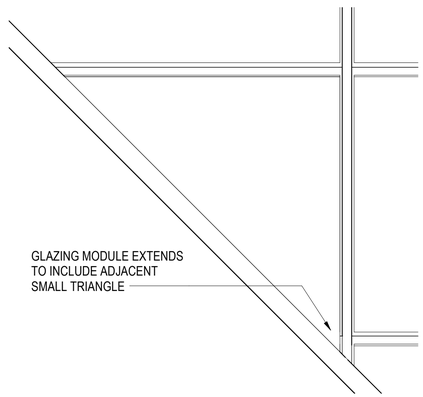

7 PLAN DETAIL - SPECIAL CONDITIONS-W2
1 1/2" = 1'-0"

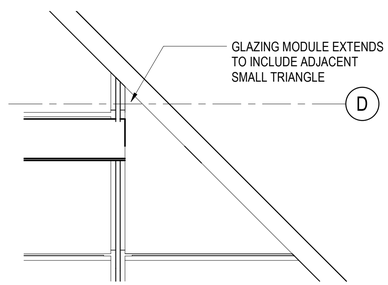

5 PLAN DETAIL - SPECIAL CONDITIONS-E2
1 1/2" = 1'-0"

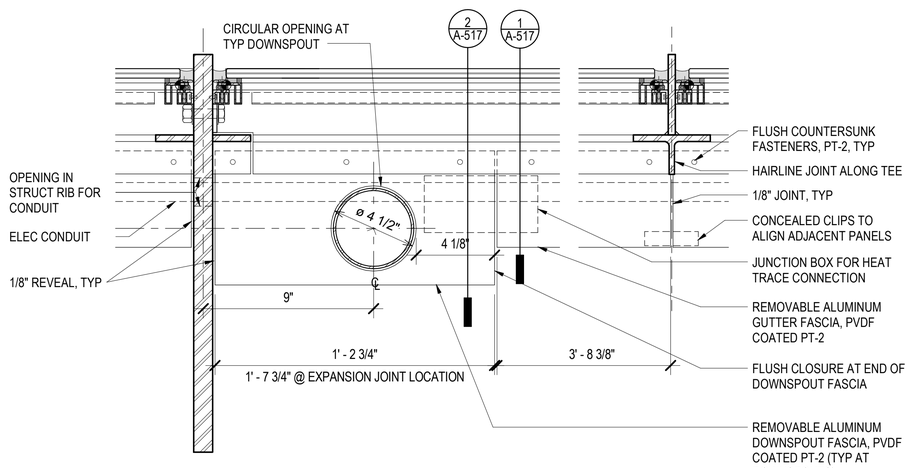

3 RCP AT GUTTER FASCIA PANEL
3" = 1'-0"

DESIGN BY:										
DRAWN BY:		4	7/3/2023	ISSUED FOR BID						
CHECKED BY:										
APPROVED BY:		0	9/9/2022	ISSUED FOR PERMIT	MN	KH	SD			
CDOT/APPROVED BY:		NO.	DATE	REVISIONS	DES.	DRW.	CHK.	DCCO	CDOT	

TRANSYSTEMS
222 SOUTH RIVERSIDE PLAZA SUITE 610
CHICAGO, ILLINOIS 60606

SKIDMORE, OWINGS & MERRILL LLP
224 SOUTH MICHIGAN AVENUE, SUITE 1000
CHICAGO, ILLINOIS 60604

CHICAGO DEPARTMENT
OF TRANSPORTATION
DIVISION OF ENGINEERING

STATE / LAKE LOOP ELEVATED STATION
200 NORTH STATE STREET, CHICAGO, IL 60601

SPEC. NO.

VAULT ENCLOSURE DETAILS

DRAWING NO.
A-517

CDOT PROJECT D-1-209

DATE: 9/9/2022

REVISION NO.

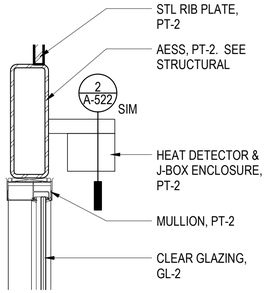

10 SECTION DETAIL
1 1/2" = 1'-0"

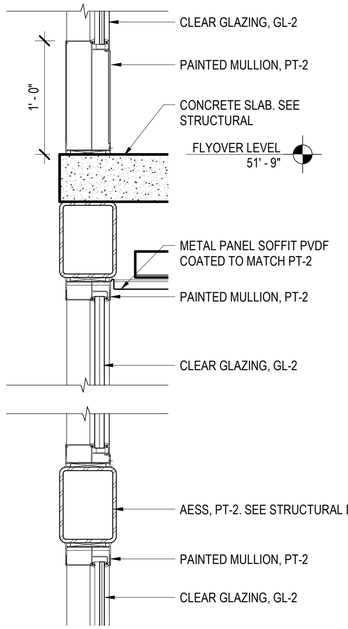

9 SECTION DETAIL
1 1/2" = 1'-0"

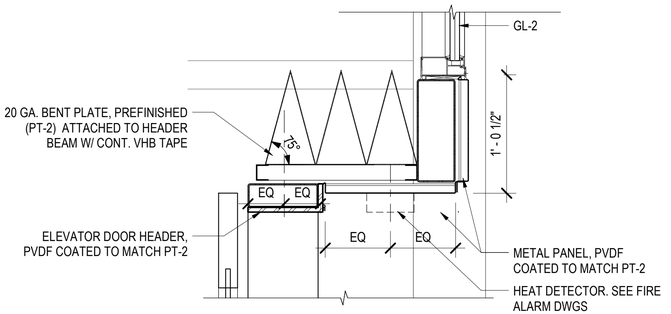

8 SECTION DETAIL
1 1/2" = 1'-0"

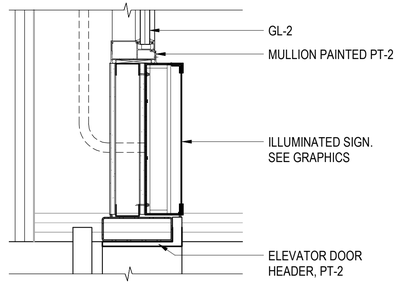

7 SECTION DETAIL
1 1/2" = 1'-0"

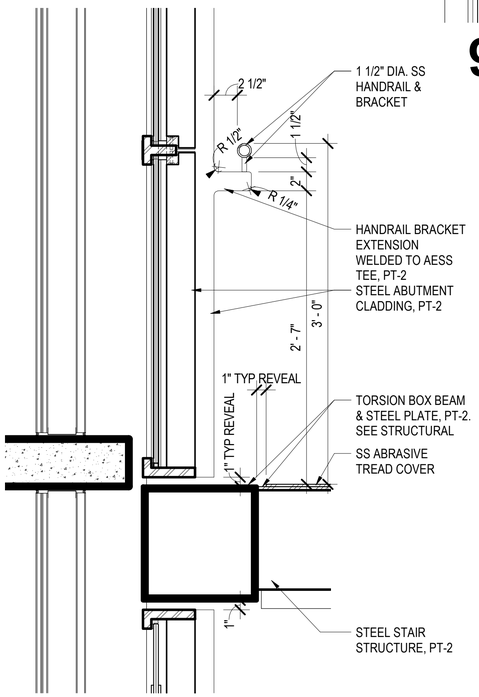

6 SECTION DETAIL
1 1/2" = 1'-0"

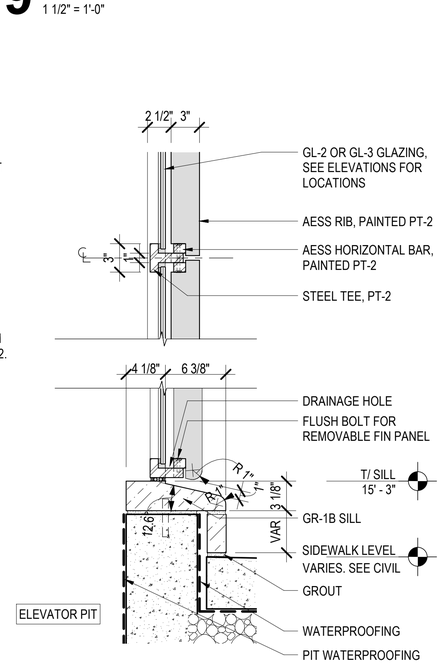

5 SECTION DETAIL
1 1/2" = 1'-0"

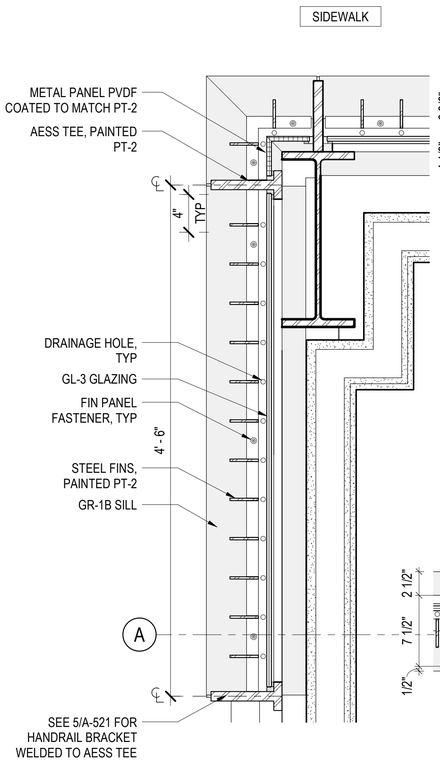

4 PLAN DETAIL
1 1/2" = 1'-0"

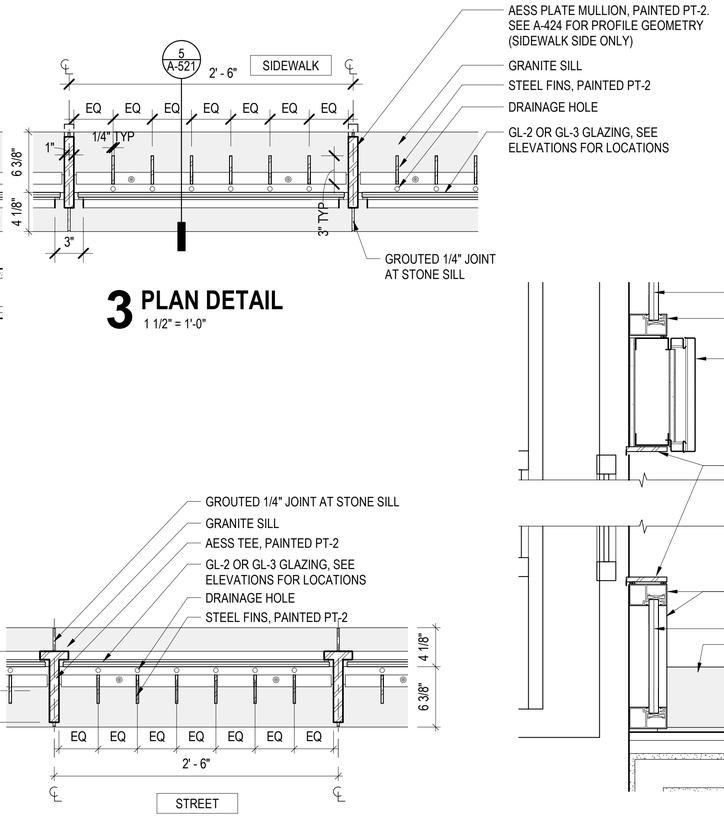

3 PLAN DETAIL
1 1/2" = 1'-0"

2 PLAN DETAIL
1 1/2" = 1'-0"

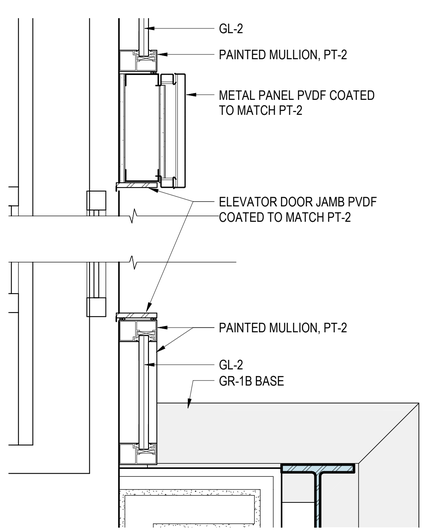

1 PLAN DETAIL
1 1/2" = 1'-0"

DESIGN BY:										
DRAWN BY:		4	7/3/2023	ISSUED FOR BID						
CHECKED BY:										
APPROVED BY:		0	9/9/2022	ISSUED FOR PERMIT	MN	KH	SD			
CDOT/APPROVED BY:		NO.	DATE	REVISIONS	DES.	DRW.	CHK.	DCCO	CDOT	

TranSystems
TRANSYSTEMS
222 SOUTH RIVERSIDE PLAZA SUITE 610
CHICAGO, ILLINOIS 60606

SOM
SKIDMORE, OWINGS & MERRILL LLP
224 SOUTH MICHIGAN AVENUE, SUITE 1000
CHICAGO, ILLINOIS 60604

CDOT
CHICAGO DEPARTMENT OF TRANSPORTATION
DIVISION OF ENGINEERING

STATE / LAKE LOOP ELEVATED STATION
200 NORTH STATE STREET, CHICAGO, IL 60601

SPEC. NO.

ABUTMENT ENCLOSURE DETAILS

DRAWING NO.
A-521

CDOT PROJECT D-1-209

DATE: 9/9/2022

REVISION NO.

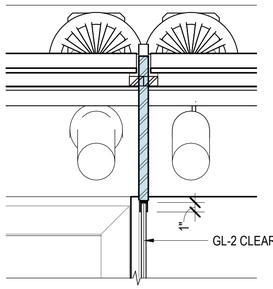

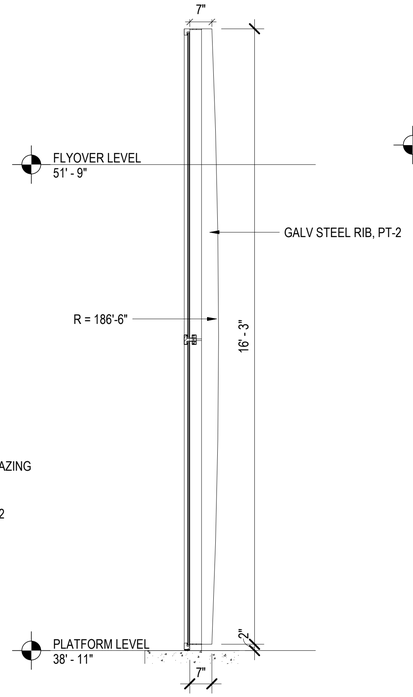

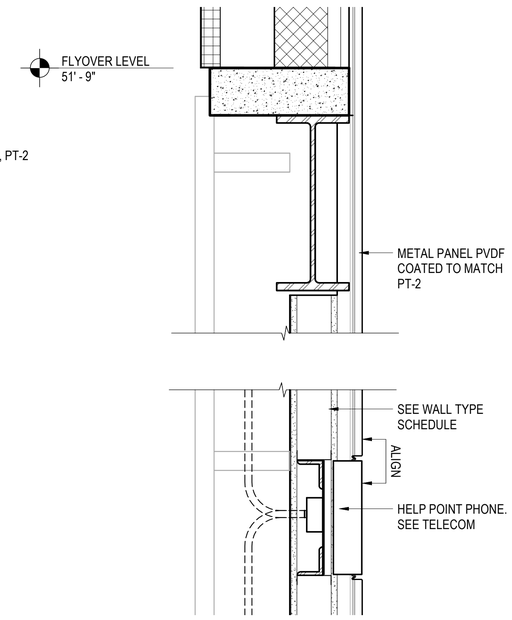

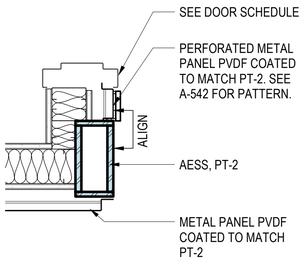

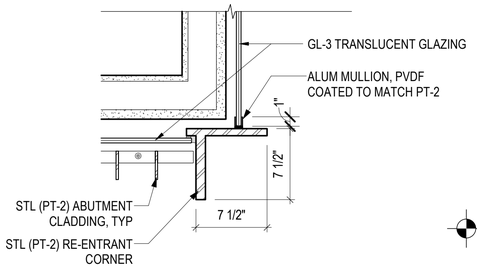

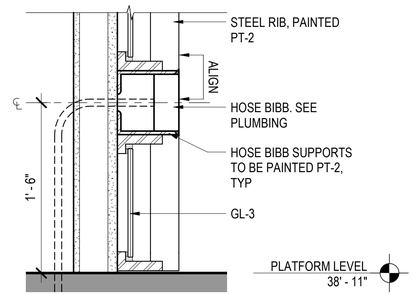

6 PLAN DETAIL 1 1/2" = 1'-0"

5 PLAN DETAIL 1 1/2" = 1'-0"

4 SECTION DETAIL 1/2" = 1'-0"

2 SECTION DETAIL 1 1/2" = 1'-0"

1 SECTION DETAIL 1 1/2" = 1'-0"

3 SECTION DETAIL 1 1/2" = 1'-0"

DESIGN BY:										
DRAWN BY:		4	7/3/2023	ISSUED FOR BID						
CHECKED BY:										
APPROVED BY:		0	9/9/2022	ISSUED FOR PERMIT	MN	KH	SD			
CDOT/APPROVED BY:		NO.	DATE	REVISIONS	DES.	DRW.	CHK.	DCCO	CDOT	

TranSystems
TRANSYSTEMS
222 SOUTH RIVERSIDE PLAZA SUITE 610
CHICAGO, ILLINOIS 60606

SOM
SKIDMORE, OWINGS & MERRILL LLP
224 SOUTH MICHIGAN AVENUE, SUITE 1000
CHICAGO, ILLINOIS 60604

CDOT
CHICAGO DEPARTMENT
OF TRANSPORTATION
DIVISION OF ENGINEERING

STATE / LAKE LOOP ELEVATED STATION
200 NORTH STATE STREET, CHICAGO, IL 60601

SPEC. NO.

ABUTMENT ENCLOSURE DETAILS

DRAWING NO.
A-522

CDOT PROJECT D-1-209

DATE: 9/9/2022

REVISION NO.

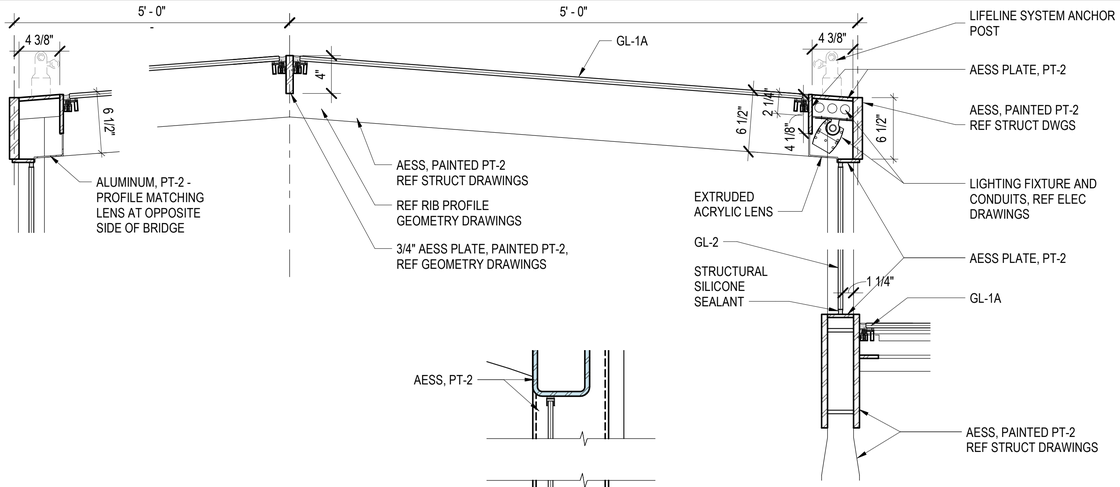

6 SECTION DETAIL
1 1/2" = 1'-0"

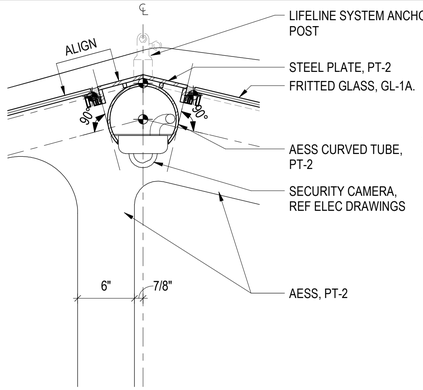

5 SECTION DETAIL
1 1/2" = 1'-0"

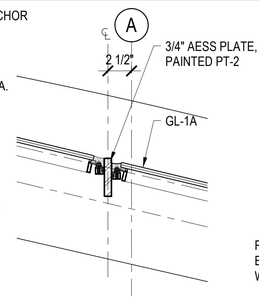

4 SECTION DETAIL
1 1/2" = 1'-0"

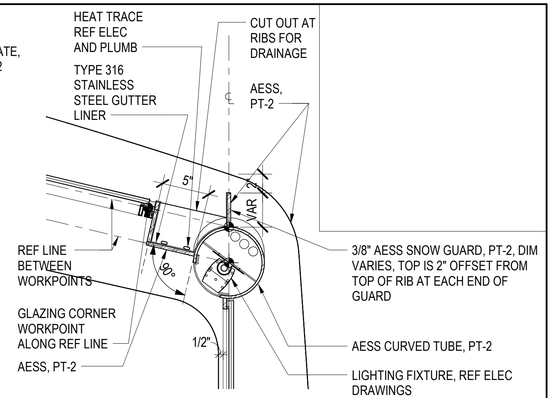

1 SECTION DETAIL
1 1/2" = 1'-0"

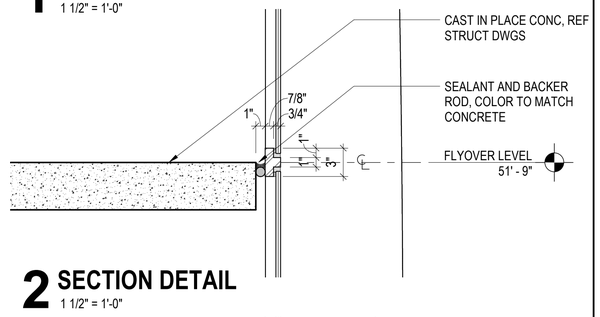

2 SECTION DETAIL
1 1/2" = 1'-0"

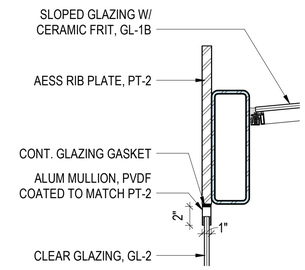

11 SECTION DETAIL
1 1/2" = 1'-0"

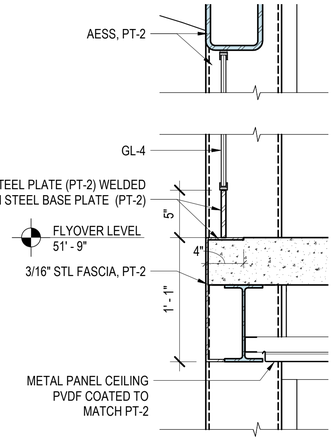

12 SECTION DETAIL
1 1/2" = 1'-0"

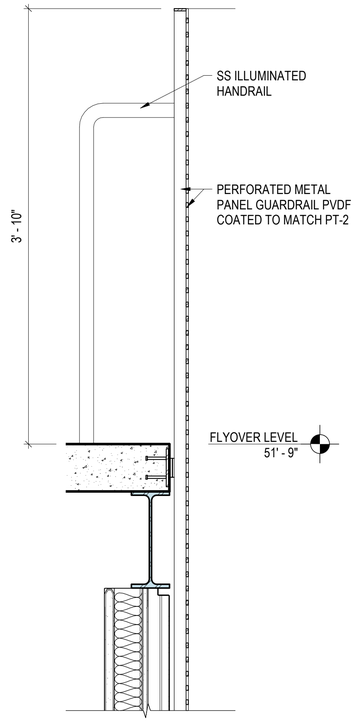

8 SECTION DETAIL
1 1/2" = 1'-0"

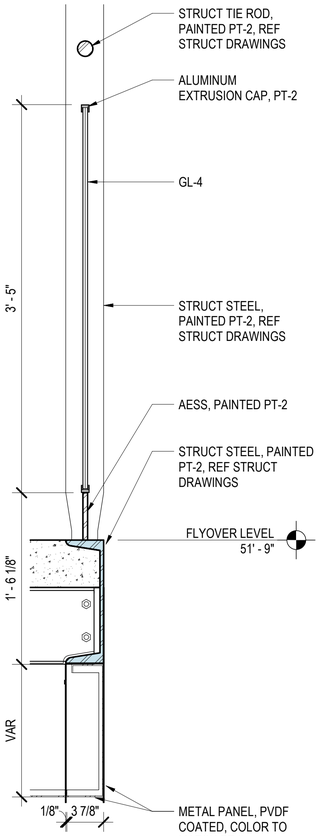

7 SECTION DETAIL
1 1/2" = 1'-0"

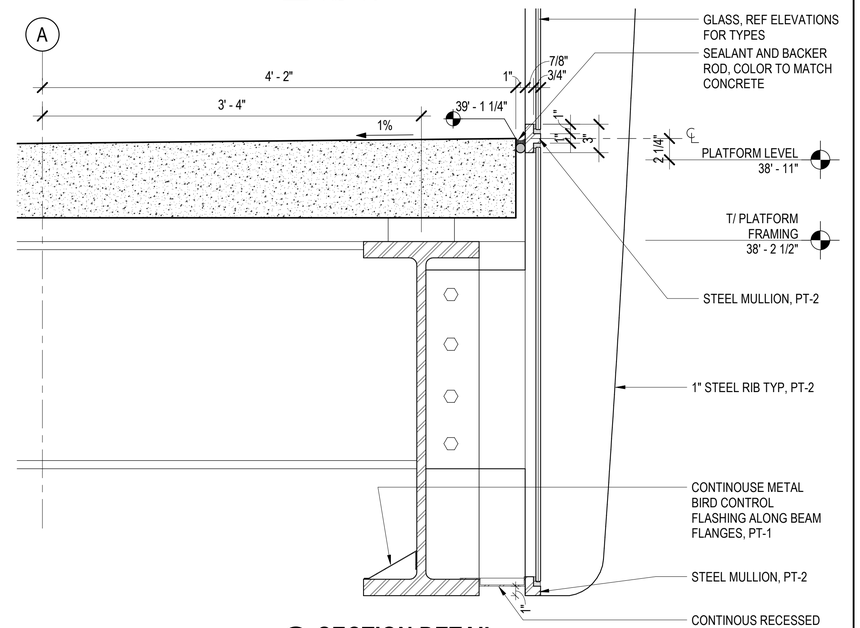

3 SECTION DETAIL
1 1/2" = 1'-0"

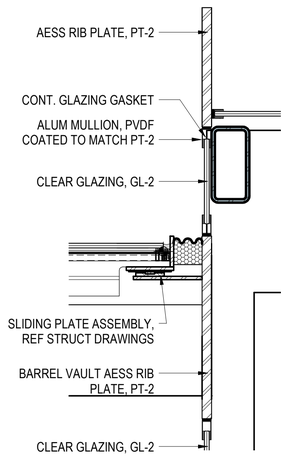

10 PLAN DETAIL
1 1/2" = 1'-0"

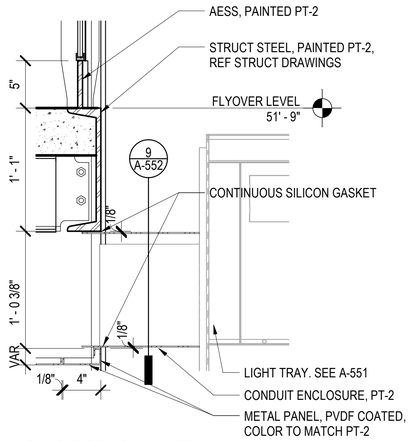

9 SECTION DETAIL
1 1/2" = 1'-0"

DESIGN BY:										
DRAWN BY:		4	7/3/2023	ISSUED FOR BID						
CHECKED BY:										
APPROVED BY:		0	9/9/2022	ISSUED FOR PERMIT	MN	KH	SD			
CDOT/APPROVED BY:		NO.	DATE	REVISIONS	DES.	DRW.	CHK.	DCCO	CDOT	

TRANSYSTEMS
222 SOUTH RIVERSIDE PLAZA SUITE 610
CHICAGO, ILLINOIS 60606

SKIDMORE, OWINGS & MERRILL LLP
224 SOUTH MICHIGAN AVENUE, SUITE 1000
CHICAGO, ILLINOIS 60604

CHICAGO DEPARTMENT OF TRANSPORTATION
DIVISION OF ENGINEERING

STATE / LAKE LOOP ELEVATED STATION
200 NORTH STATE STREET, CHICAGO, IL 60601

FLYOVER ENCLOSURE & BRIDGE DETAILS

CDOT PROJECT D-1-209 | DATE: 9/9/2022

SPEC. NO.

DRAWING NO. A-523

REVISION NO.

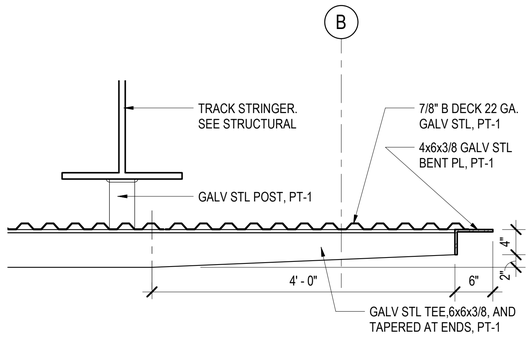

7 SECTION DETAIL - DRIP PAN
1" = 1'-0"

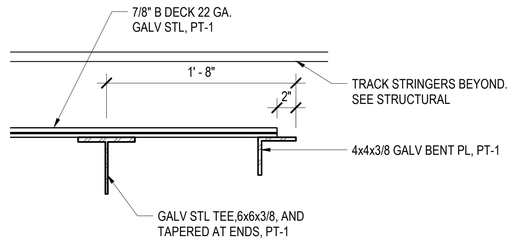

6 SECTION DETAIL - DRIP PAN
1 1/2" = 1'-0"

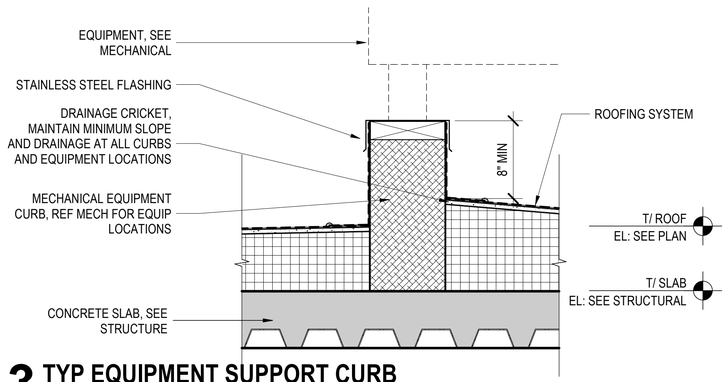

3 TYP EQUIPMENT SUPPORT CURB
1 1/2" = 1'-0"

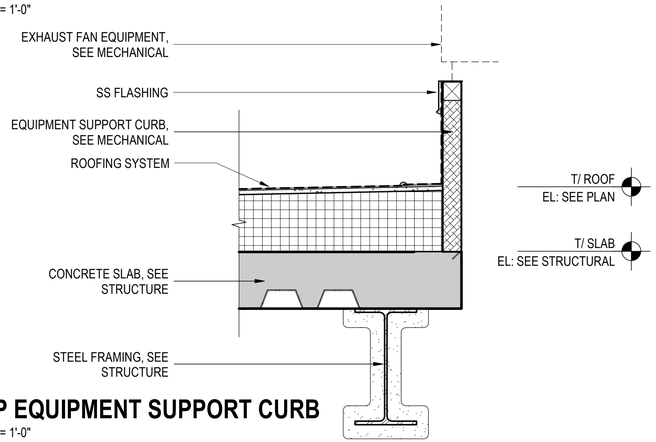

4 TYP EQUIPMENT SUPPORT CURB
1 1/2" = 1'-0"

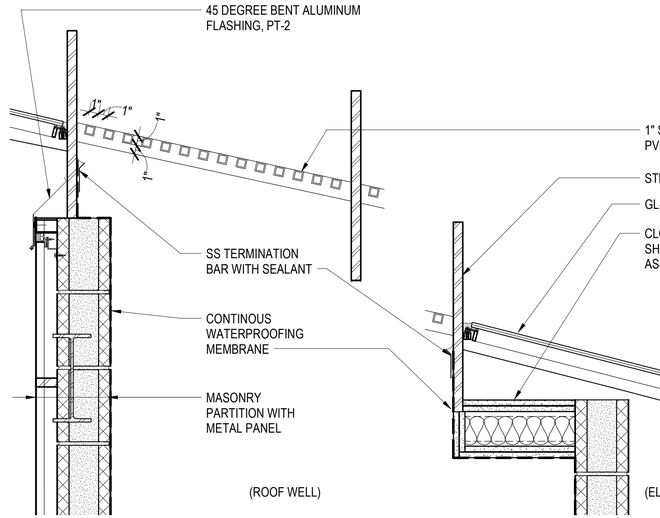

1 SECTION DETAIL
1 1/2" = 1'-0"

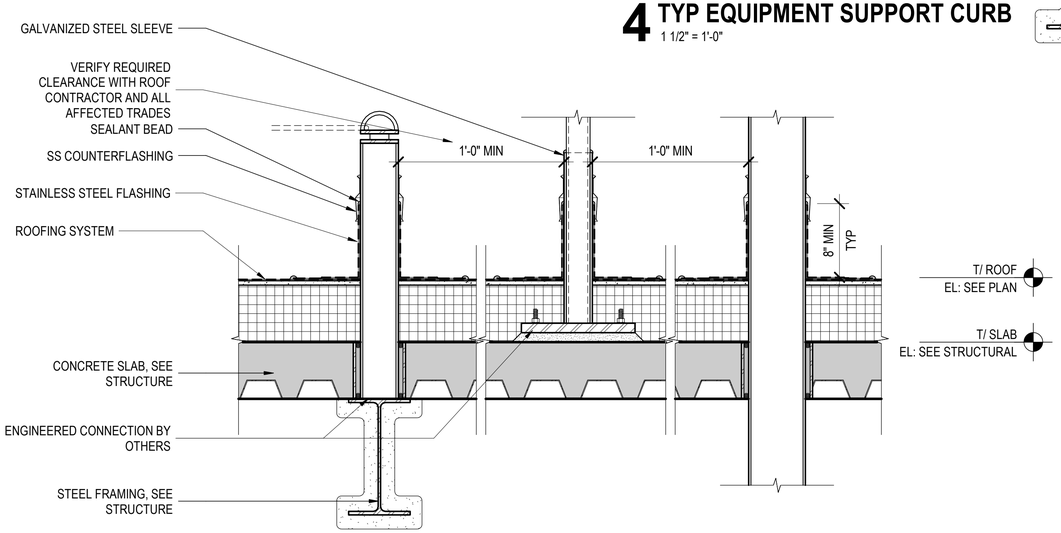

5 TYP ROOF PENETRATIONS
1 1/2" = 1'-0"

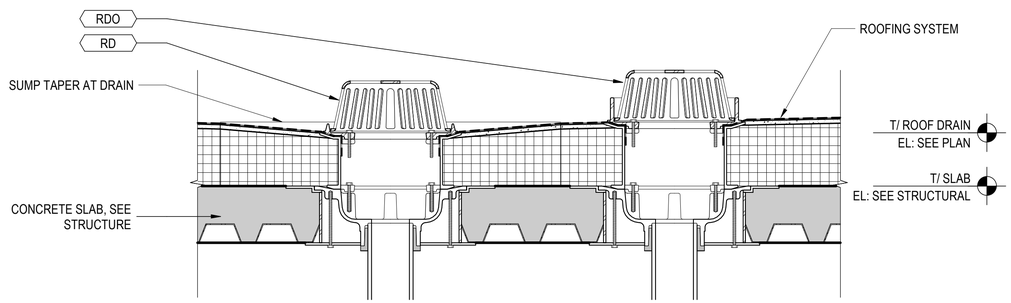

2 TYP ROOF DRAIN AND OVERFLOW ROOF DRAIN
1 1/2" = 1'-0"

DESIGN BY:										
DRAWN BY:		4	7/3/2023	ISSUED FOR BID						
CHECKED BY:										
APPROVED BY:		0	9/9/2022	ISSUED FOR PERMIT	MN	KH	SD			
CDOT/APPROVED BY:		NO.	DATE	REVISIONS	DES.	DRW.	CHK.	DCCO	CDOT	

TranSystems
TRANSYSTEMS
222 SOUTH RIVERSIDE PLAZA SUITE 610
CHICAGO, ILLINOIS 60606

SOM
SKIDMORE, OWINGS & MERRILL LLP
224 SOUTH MICHIGAN AVENUE, SUITE 1000
CHICAGO, ILLINOIS 60604

CDOT
CHICAGO DEPARTMENT
OF TRANSPORTATION
DIVISION OF ENGINEERING

STATE / LAKE LOOP ELEVATED STATION
200 NORTH STATE STREET, CHICAGO, IL 60601

ROOF DETAILS

SPEC. NO.

DRAWING NO.
A-524

CDOT PROJECT D-1-209

DATE: 9/9/2022

REVISION NO.

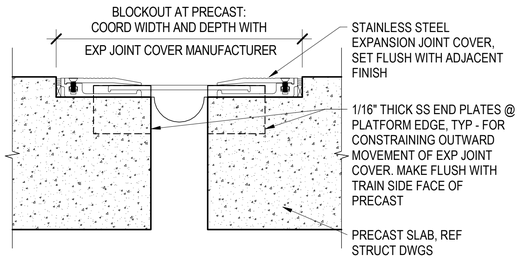

8 TYP PLATFORM EXPANSION JOINT
3" = 1'-0"

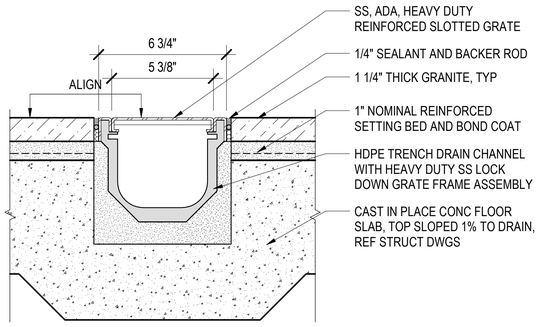

5 TYP TRENCH DRAIN
3" = 1'-0"

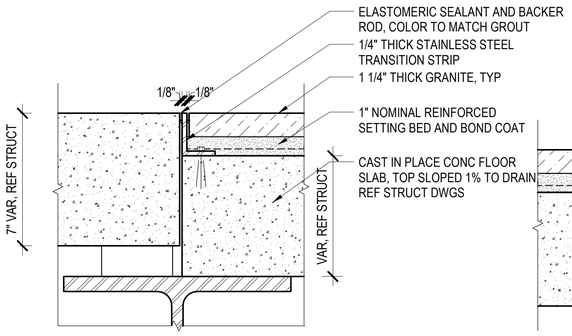

4 TYP GRANITE TO PRECAST TRANSITION
3" = 1'-0"

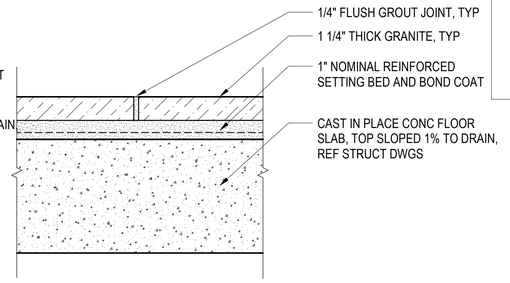

1 TYP GRANITE PAVER
3" = 1'-0"

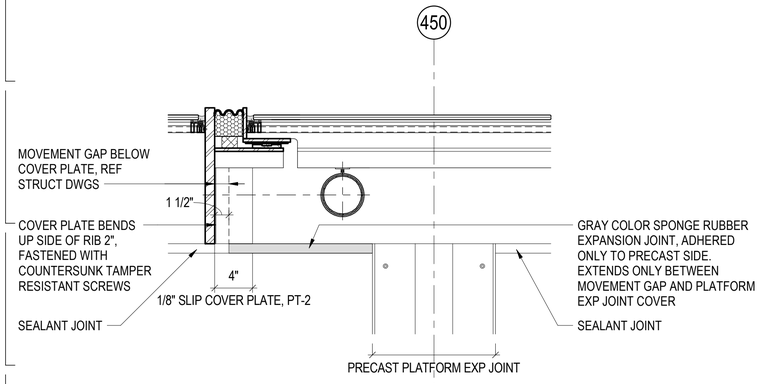

9 PLAN DETAIL - TYP PLATFORM EXPANSION TRANSITION
1 1/2" = 1'-0"

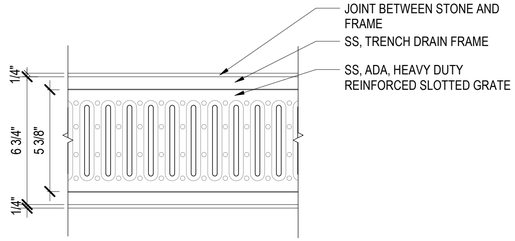

6 TYP TRENCH DRAIN GRATE
3" = 1'-0"

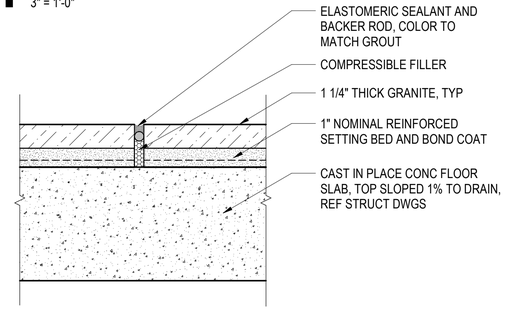

2 TYP GRANITE PAVER CONTROL JOINT
3" = 1'-0"

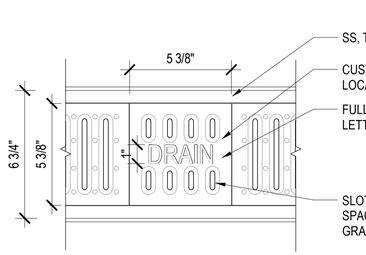

7 CUSTOM DRAIN OUTLET COVER
3" = 1'-0"

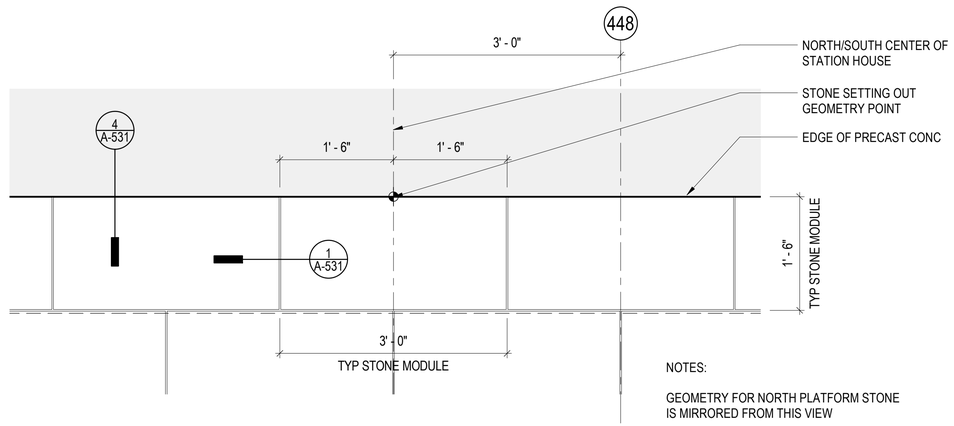

NOTES:

GEOMETRY FOR NORTH PLATFORM STONE IS MIRRORED FROM THIS VIEW

FULL 36" X 18" STONE MODULE IS TO BE INSTALLED ON NORTH AND SOUTH SIDES OF TRENCH DRAIN.

3 STONE PAVER SETTING OUT POINT
1" = 1'-0"

DESIGN BY:										
DRAWN BY:		4	7/3/2023	ISSUED FOR BID						
CHECKED BY:										
APPROVED BY:		0	9/9/2022	ISSUED FOR PERMIT	MN	KH	SD			
CDOT/APPROVED BY:		NO.	DATE	REVISIONS	DES.	DRW.	CHK.	DCCO	CDOT	

TRANSYSTEMS
222 SOUTH RIVERSIDE PLAZA SUITE 610
CHICAGO, ILLINOIS 60606

SKIDMORE, OWINGS & MERRILL LLP
224 SOUTH MICHIGAN AVENUE, SUITE 1000
CHICAGO, ILLINOIS 60604

CHICAGO DEPARTMENT OF TRANSPORTATION
DIVISION OF ENGINEERING

STATE / LAKE LOOP ELEVATED STATION
200 NORTH STATE STREET, CHICAGO, IL 60601

TYPICAL PLATFORM DETAILS

CDOT PROJECT D-1-209

DATE: 9/9/2022

SPEC. NO.

DRAWING NO. A-531

REVISION NO.

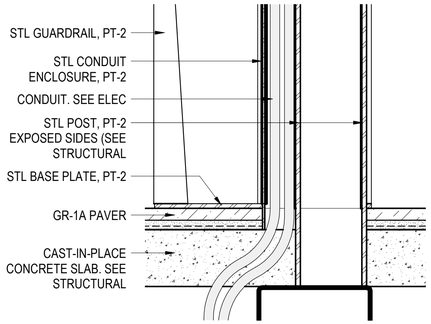

13 SECTION DETAIL
1 1/2" = 1'-0"

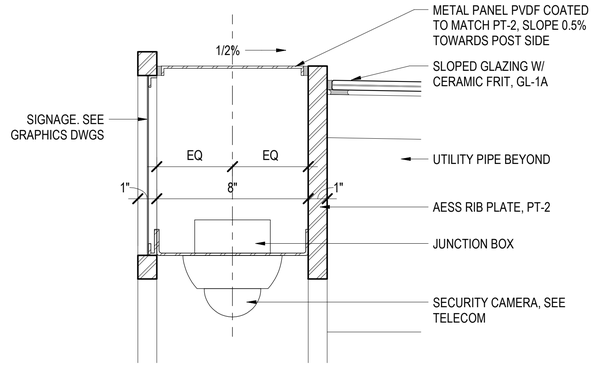

10 SECTION DETAIL
3" = 1'-0"

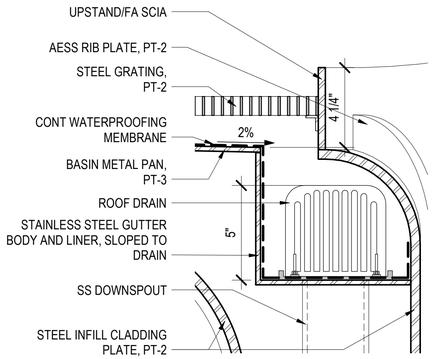

7 SECTION DETAIL
3" = 1'-0"

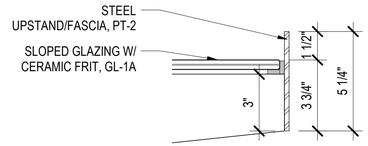

4 SECTION DETAIL
3" = 1'-0"

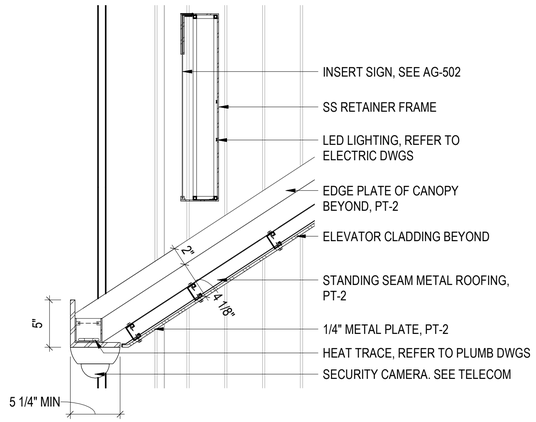

12 SECTION DETAIL
1 1/2" = 1'-0"

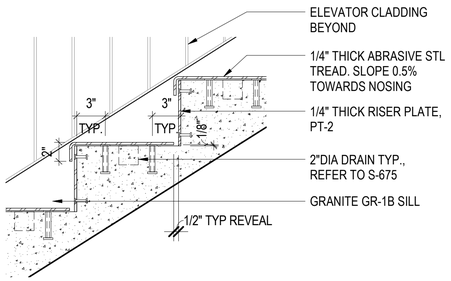

9 SECTION DETAIL
1 1/2" = 1'-0"

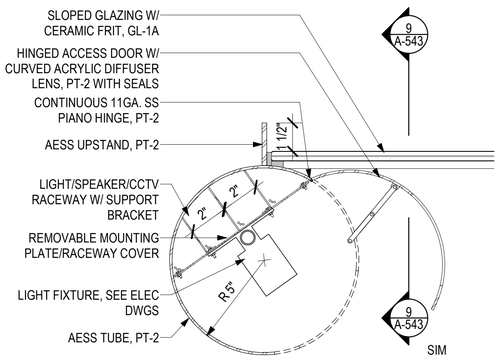

6 SECTION DETAIL - LIGHT
3" = 1'-0"

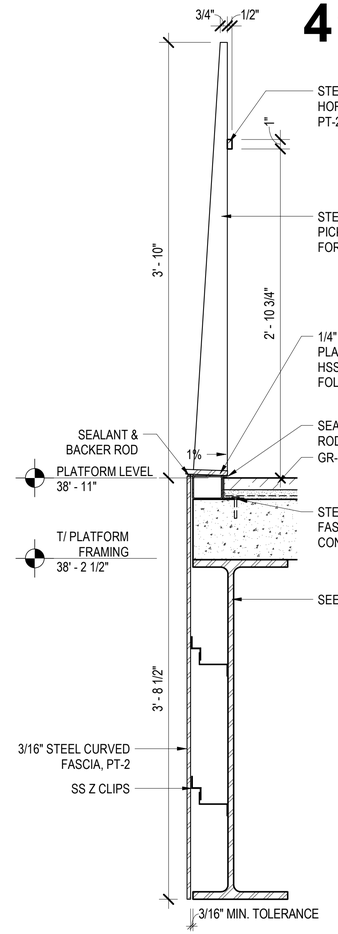

3 SECTION DETAIL
1 1/2" = 1'-0"

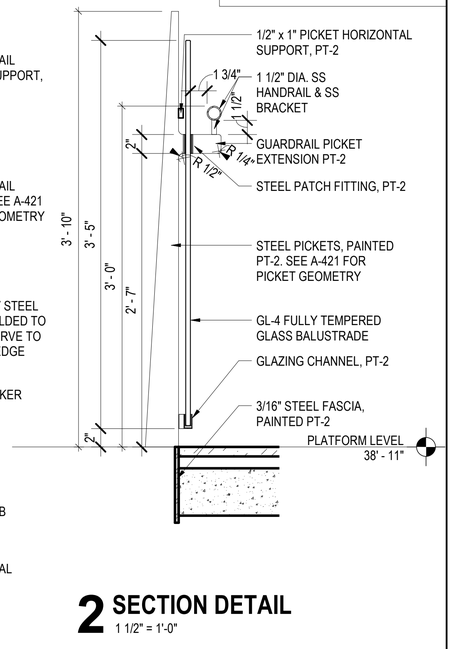

2 SECTION DETAIL
1 1/2" = 1'-0"

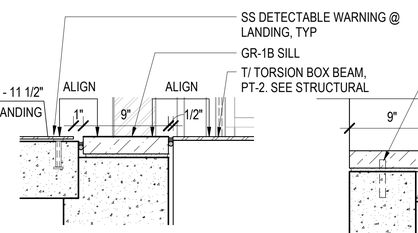

15 SECTION DETAIL
1 1/2" = 1'-0"

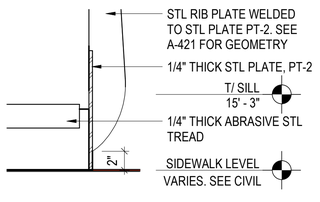

14 SECTION DETAIL
1 1/2" = 1'-0"

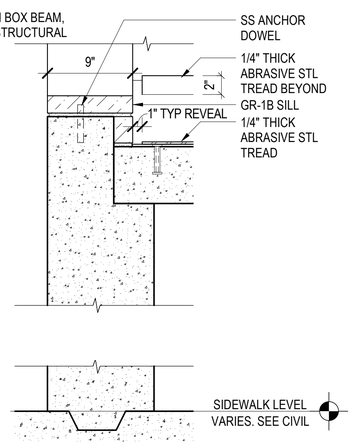

11 SECTION DETAIL
1 1/2" = 1'-0"

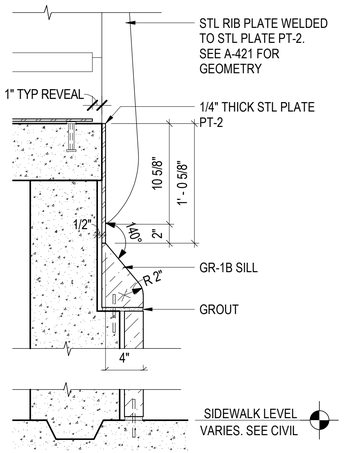

8 SECTION DETAIL
1 1/2" = 1'-0"

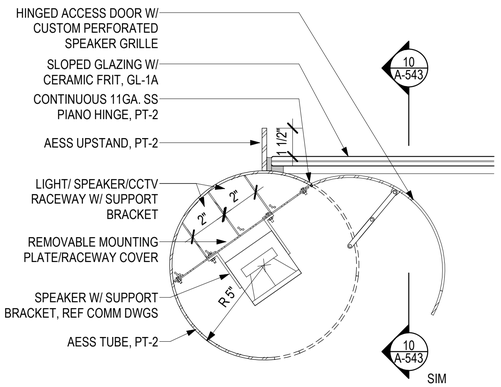

5 SECTION DETAIL - SPEAKER
3" = 1'-0"

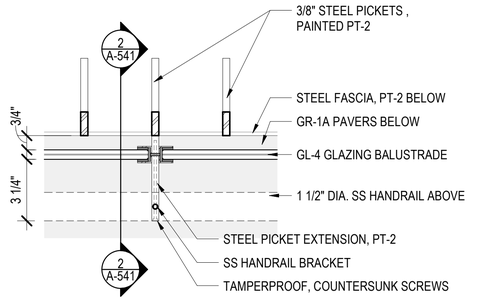

1 PLAN DETAIL
3" = 1'-0"

DESIGN BY:										
DRAWN BY:		4	7/3/2023	ISSUED FOR BID						
CHECKED BY:		1	11/4/2022	ISSUED FOR PERMIT REVISION 1						
APPROVED BY:		0	9/9/2022	ISSUED FOR PERMIT	MN	KH	SD			
CDOT/APPROVED BY:		NO.	DATE	REVISIONS	DES.	DRW.	CHK.	DCCO	CDOT	

TRANSYSTEMS
222 SOUTH RIVERSIDE PLAZA SUITE 610
CHICAGO, ILLINOIS 60606

SKIDMORE, OWINGS & MERRILL LLP
224 SOUTH MICHIGAN AVENUE, SUITE 1000
CHICAGO, ILLINOIS 60604

CHICAGO DEPARTMENT OF TRANSPORTATION
DIVISION OF ENGINEERING

STATE / LAKE LOOP ELEVATED STATION
200 NORTH STATE STREET, CHICAGO, IL 60601

SPEC. NO.

STAIR & GUARDRAIL DETAILS

DRAWING NO. A-541

CDOT PROJECT D-1-209 | DATE: 9/9/2022 | REVISION NO.1

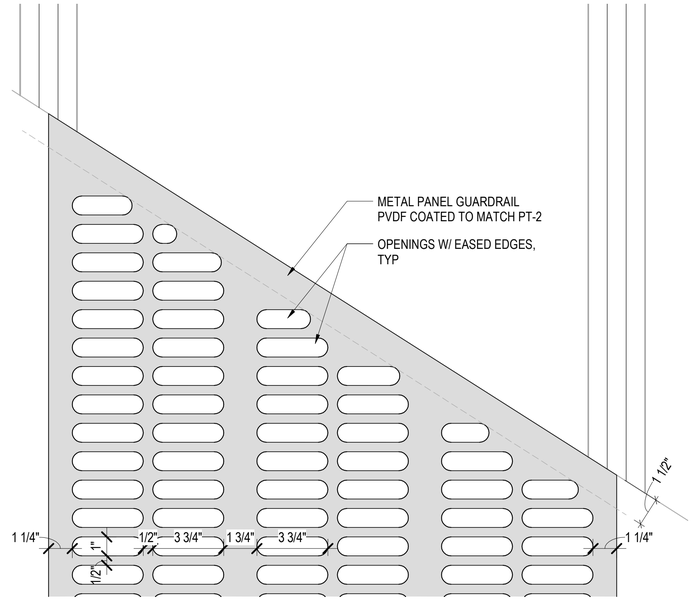

12 ELEVATION DETAIL
3" = 1'-0"

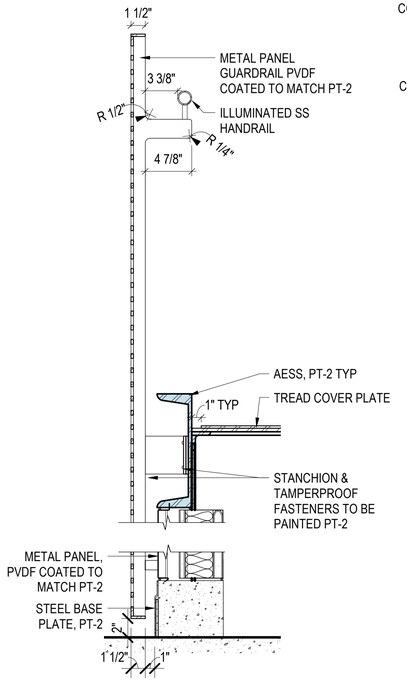

11 SECTION DETAIL
1 1/2" = 1'-0"

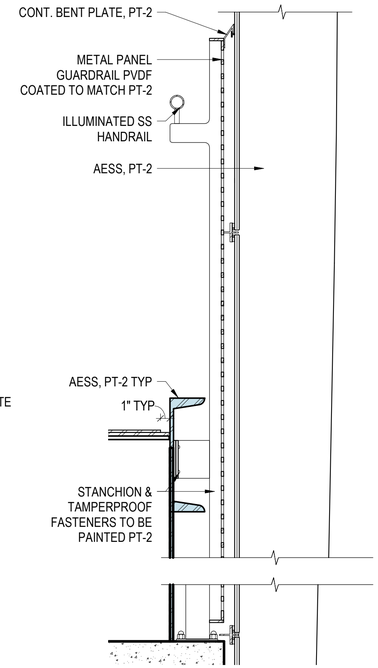

10 SECTION DETAIL
1 1/2" = 1'-0"

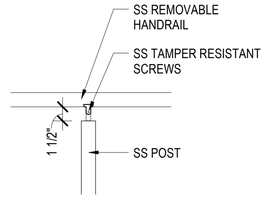

13 SECTION DETAIL
1 1/2" = 1'-0"

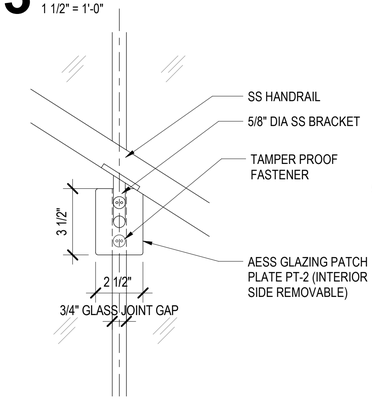

9 ELEVATION DETAIL
3" = 1'-0"

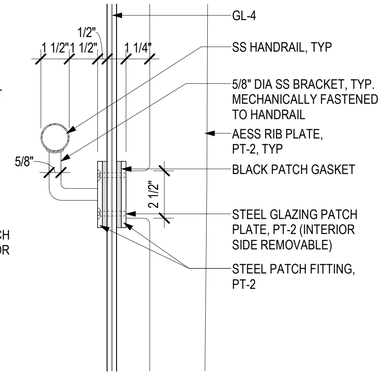

8 SECTION DETAIL
3" = 1'-0"

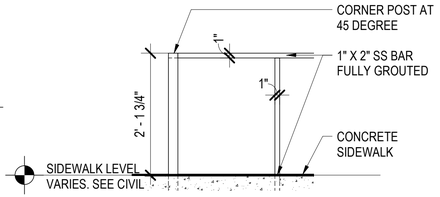

7 SECTION - CANE DETECTION
3/4" = 1'-0"

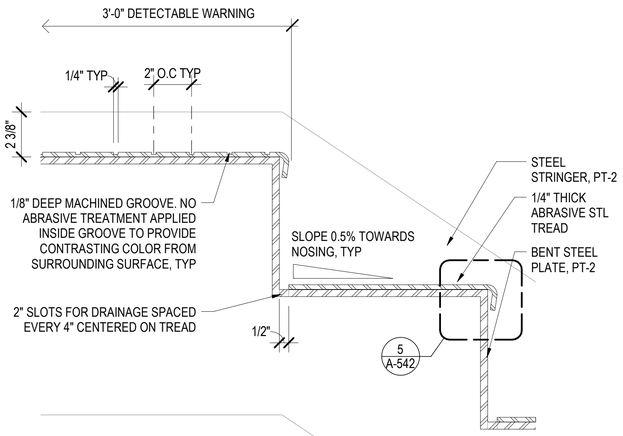

4 SECTION DETAIL
3" = 1'-0"

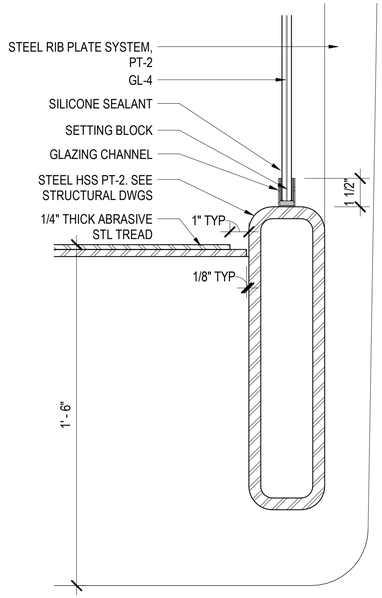

3 SECTION DETAIL
3" = 1'-0"

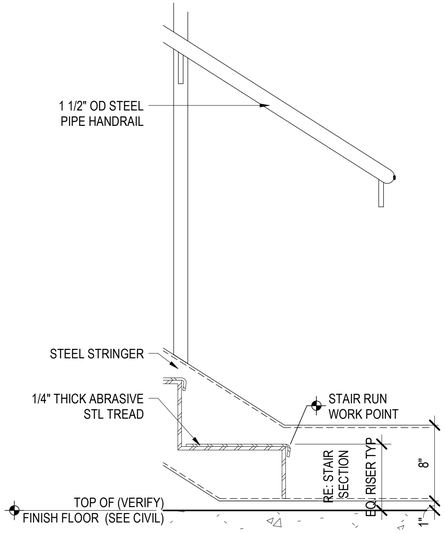

2 SECTION DETAIL
1 1/2" = 1'-0"

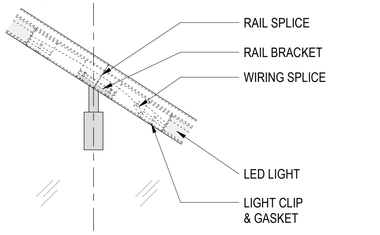

6 ELEVATION DETAIL
3" = 1'-0"

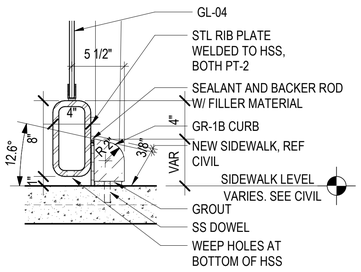

1 SECTION DETAIL
1 1/2" = 1'-0"

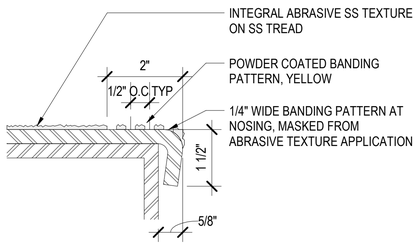

5 SECTION DETAIL
6" = 1'-0"

DESIGN BY:										
DRAWN BY:		4	7/3/2023	ISSUED FOR BID						
CHECKED BY:										
APPROVED BY:		0	9/9/2022	ISSUED FOR PERMIT	MN	KH	SD			
CDOT/APPROVED BY:		NO.	DATE	REVISIONS	DES.	DRW.	CHK.	DCCO	CDOT	

TRANSYSTEMS
222 SOUTH RIVERSIDE PLAZA SUITE 610
CHICAGO, ILLINOIS 60606

SKIDMORE, OWINGS & MERRILL LLP
224 SOUTH MICHIGAN AVENUE, SUITE 1000
CHICAGO, ILLINOIS 60604

CHICAGO DEPARTMENT OF TRANSPORTATION
DIVISION OF ENGINEERING

STATE / LAKE LOOP ELEVATED STATION
200 NORTH STATE STREET, CHICAGO, IL 60601

STAIR & GUARDRAIL DETAILS

CDOT PROJECT D-1-209

DATE: 9/9/2022

SPEC. NO.

DRAWING NO. A-542

REVISION NO.

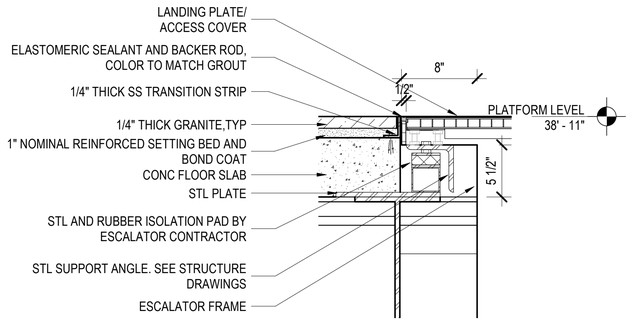

13 SECTION DETAIL
1 1/2" = 1'-0"

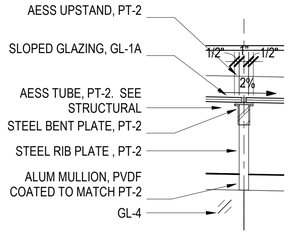

12 SECTION DETAIL
1 1/2" = 1'-0"

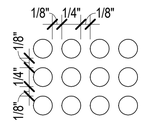

11 ELEVATION DETAIL
12" = 1'-0"

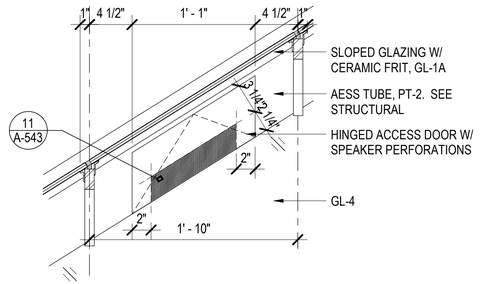

10 SECTION DETAIL
1 1/2" = 1'-0"

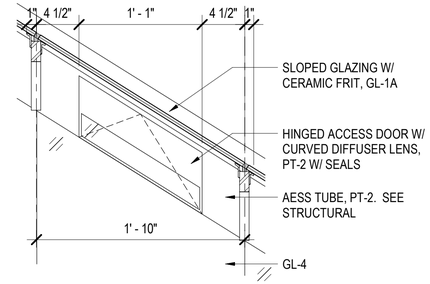

9 SECTION DETAIL
1 1/2" = 1'-0"

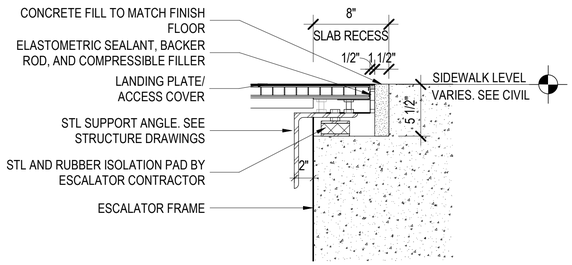

8 SECTION DETAIL
1 1/2" = 1'-0"

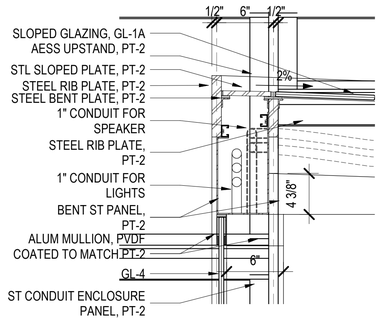

7 SECTION DETAIL
1 1/2" = 1'-0"

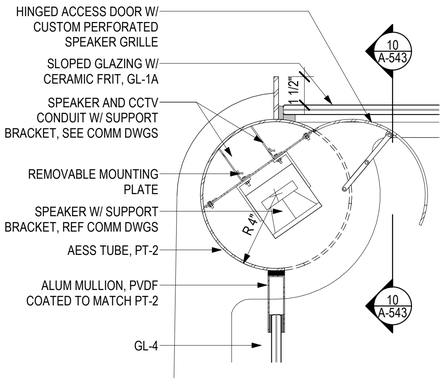

6 SECTION DETAIL
3" = 1'-0"

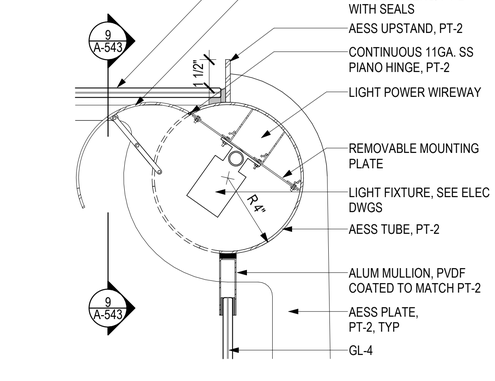

5 SECTION DETAIL
3" = 1'-0"

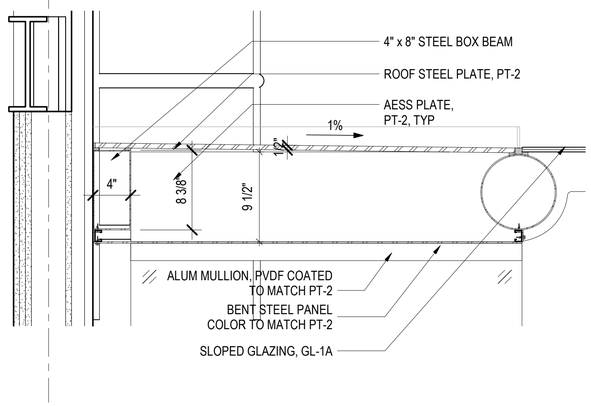

4 SECTION DETAIL
1 1/2" = 1'-0"

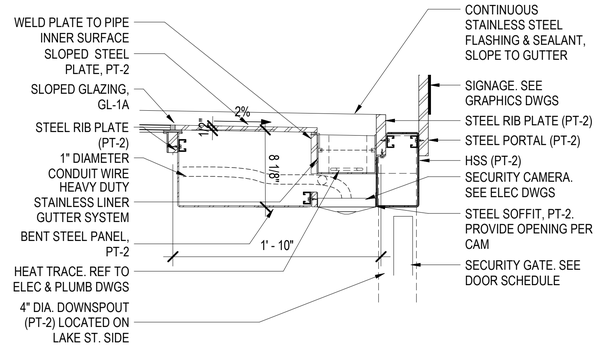

3 SECTION DETAIL
1 1/2" = 1'-0"

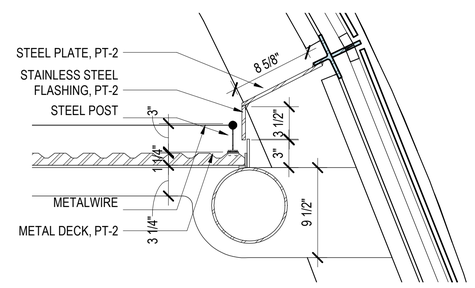

2 SECTION DETAIL
1 1/2" = 1'-0"

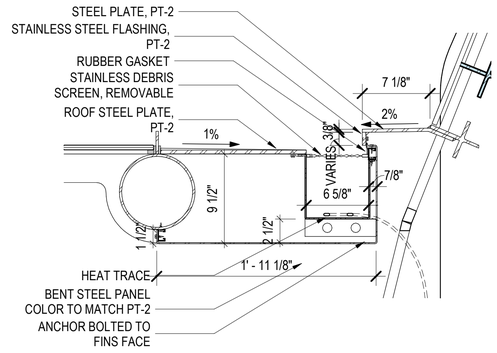

1 SECTION DETAIL
1 1/2" = 1'-0"

DESIGN BY:										
DRAWN BY:		4	7/3/2023	ISSUED FOR BID						
CHECKED BY:										
APPROVED BY:		0	9/9/2022	ISSUED FOR PERMIT	MN	KH	SD			
CDOT/APPROVED BY:		NO.	DATE	REVISIONS	DES.	DRW.	CHK.	DCCO	CDOT	

TranSystems
TRANSYSTEMS
222 SOUTH RIVERSIDE PLAZA SUITE 610
CHICAGO, ILLINOIS 60606

SOM
SKIDMORE, OWINGS & MERRILL LLP
224 SOUTH MICHIGAN AVENUE, SUITE 1000
CHICAGO, ILLINOIS 60604

CDOT
CHICAGO DEPARTMENT OF TRANSPORTATION
DIVISION OF ENGINEERING

STATE / LAKE LOOP ELEVATED STATION
200 NORTH STATE STREET, CHICAGO, IL 60601

SPEC. NO.

STAIR ENCLOSURE DETAILS

DRAWING NO.
A-543

CDOT PROJECT D-1-209

DATE: 9/9/2022

REVISION NO.

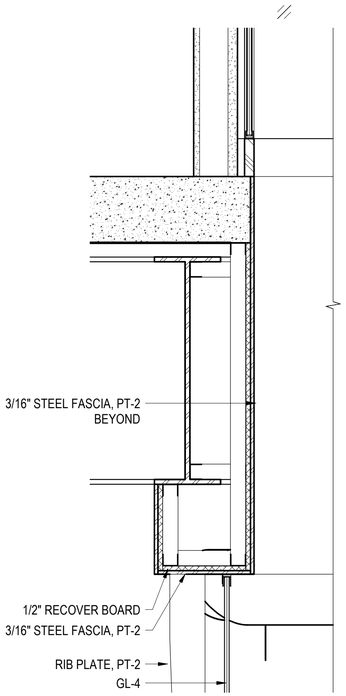

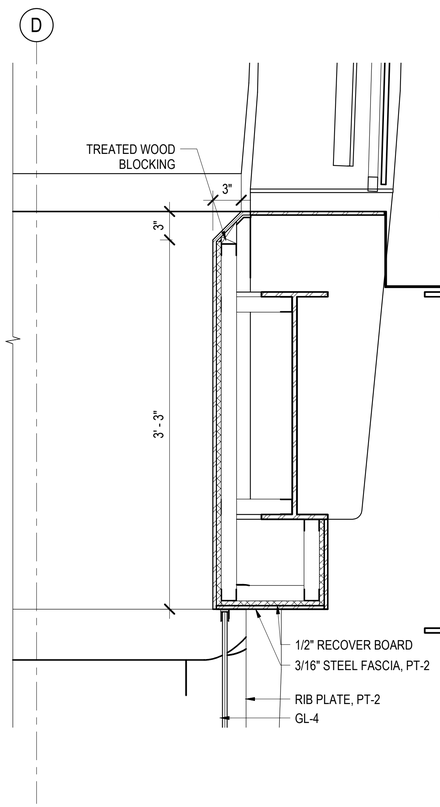

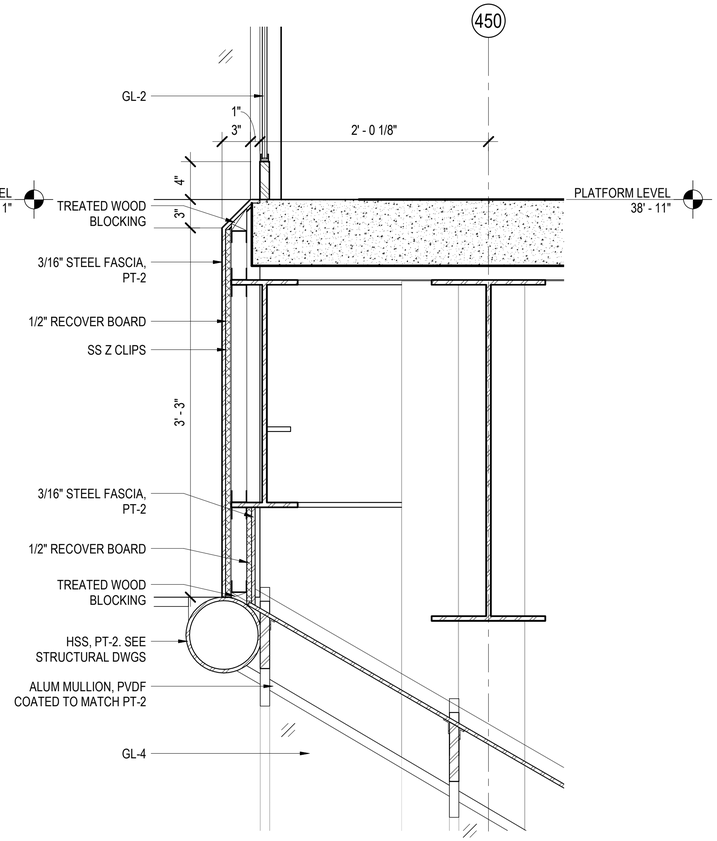

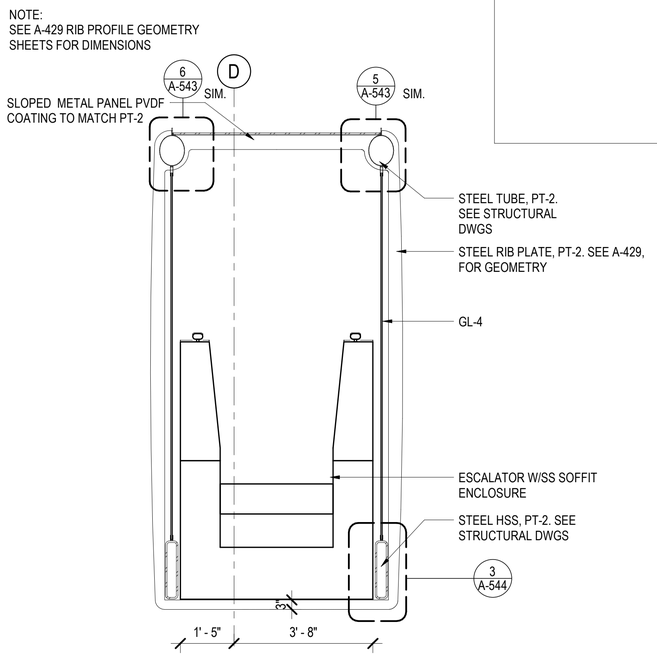

5 SECTION - TYP ESCALATOR
1/2" = 1'-0"

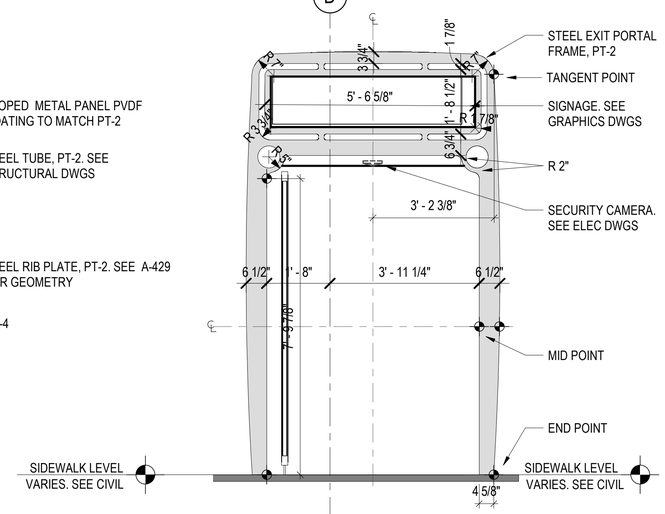

1 ELEVATION - TYP ESCALATOR PORTAL
1/2" = 1'-0"

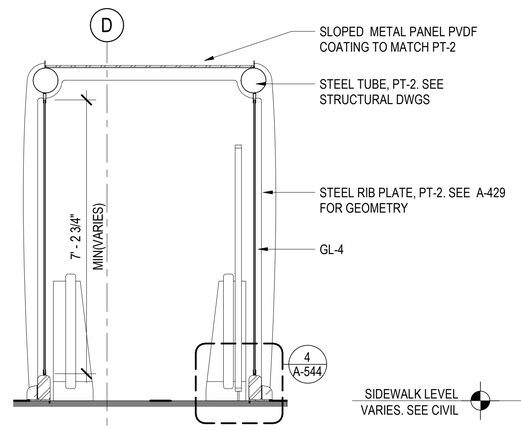

2 SECTION - TYP ESCALATOR PORTAL
1/2" = 1'-0"

NOTE:
SEE A-429 RIB PROFILE GEOMETRY
SHEETS FOR DIMENSIONS

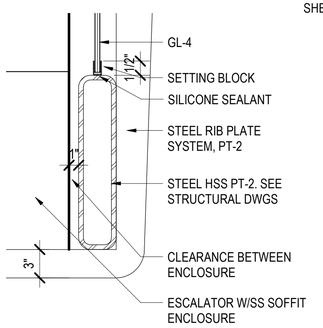

3 SECTION DETAIL
1 1/2" = 1'-0"

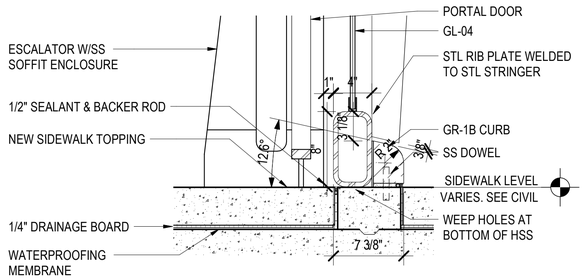

4 SECTION DETAIL
1 1/2" = 1'-0"

6 SECTION DETAIL - ESCALATOR FASCIA
1 1/2" = 1'-0"

7 SECTION DETAIL - ESCALATOR FASCIA
1 1/2" = 1'-0"

DESIGN BY:										
DRAWN BY:		4	7/3/2023	ISSUED FOR BID						
CHECKED BY:										
APPROVED BY:		0	9/9/2022	ISSUED FOR PERMIT	MN	KH	SD			
CDOT/APPROVED BY:		NO.	DATE	REVISIONS	DES.	DRW.	CHK.	DCCO	CDOT	

TRANSYSTEMS
222 SOUTH RIVERSIDE PLAZA SUITE 610
CHICAGO, ILLINOIS 60606

SKIDMORE, OWINGS & MERRILL LLP
224 SOUTH MICHIGAN AVENUE, SUITE 1000
CHICAGO, ILLINOIS 60604

CHICAGO DEPARTMENT
OF TRANSPORTATION
DIVISION OF ENGINEERING

STATE / LAKE LOOP ELEVATED STATION
200 NORTH STATE STREET, CHICAGO, IL 60601

SPEC. NO.

ESCALATOR ENCLOSURE DETAILS

DRAWING NO.
A-544

CDOT PROJECT D-1-209 | DATE: 9/9/2022 | REVISION NO.

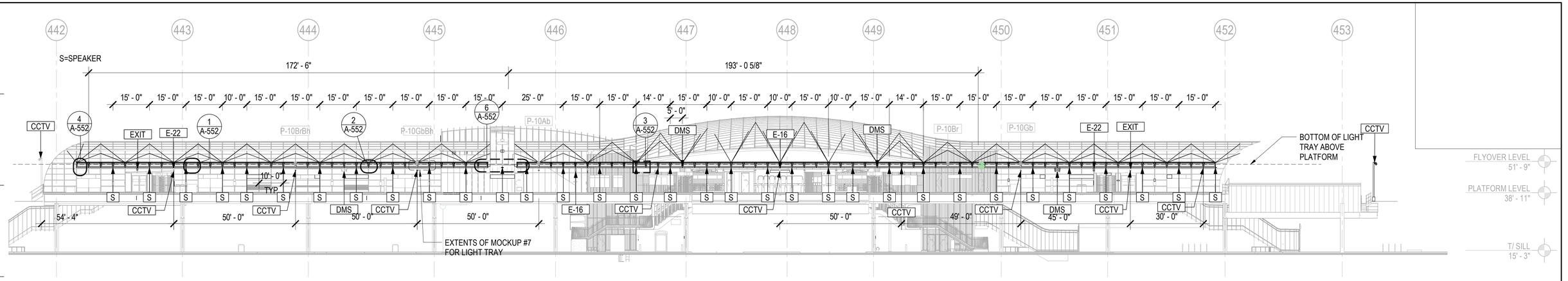

1 ELEVATION - NORTH PLATFORM LIGHT TRAY

1" = 20'-0"

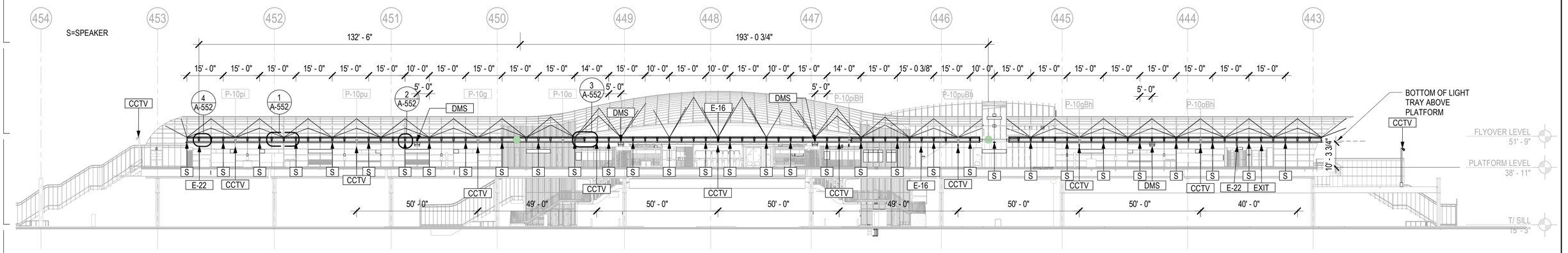

2 ELEVATION - SOUTH PLATFORM LIGHT TRAY

1" = 20'-0"

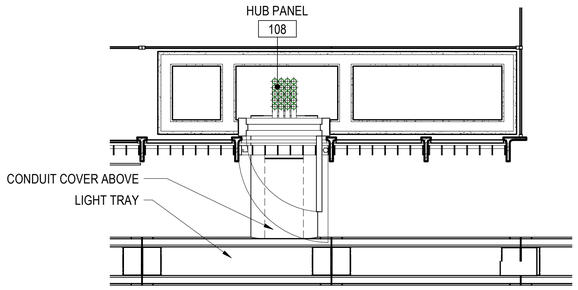

3 REFLECTED CEILING PLAN - EAST CONDUIT TO LIGHT TRAY

1/2" = 1'-0"

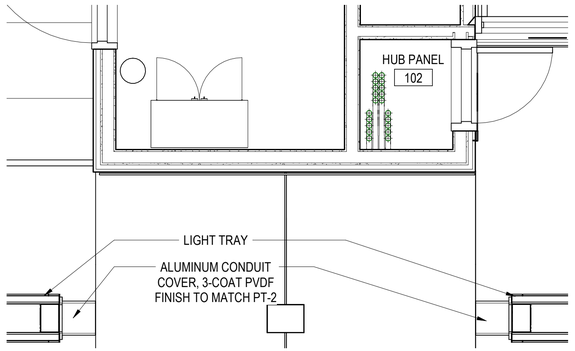

4 REFLECTED CEILING PLAN - WEST CONDUIT TO LIGHT TRAY

1/2" = 1'-0"

CABLE AND LIGHT TRAY GENERAL NOTES

1. ISOLATE DISSIMILAR METALS
2. REFER TO ELECTRICAL DRAWINGS FOR ADDITIONAL INFORMATION
3. CABLE AND LIGHT TRAY SHALL BE UL TESTED AND IP-65 RATED
4. ACCESS DOORS TO HAVE CONTINUOUS GASKETS
5. INSTALL GROMMETS AT OPENINGS IN WIREWAY
6. ENCLOSURE TO BE ALUMINUM, 3-COAT PVDF COATED TO MATCH PT-2

DESIGN BY:										
DRAWN BY:		4	7/3/2023	ISSUED FOR BID						
CHECKED BY:										
APPROVED BY:		0	9/9/2022	ISSUED FOR PERMIT	MN	KH	SD			
CDOT/APPROVED BY:		NO.	DATE	REVISIONS	DES.	DRW.	CHK.	DCCO	CDOT	

TRANSYSTEMS
222 SOUTH RIVERSIDE PLAZA SUITE 610
CHICAGO, ILLINOIS 60606

SKIDMORE, OWINGS & MERRILL LLP
224 SOUTH MICHIGAN AVENUE, SUITE 1000
CHICAGO, ILLINOIS 60604

CHICAGO DEPARTMENT OF TRANSPORTATION
DIVISION OF ENGINEERING

STATE / LAKE LOOP ELEVATED STATION
200 NORTH STATE STREET, CHICAGO, IL 60601

SPEC. NO.

CABLE & LIGHT TRAY ELEVATIONS

DRAWING NO. A-551

CDOT PROJECT D-1-209

DATE: 9/9/2022

REVISION NO.

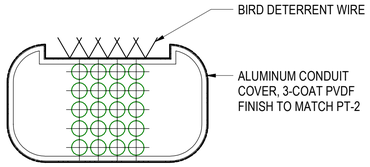

10 SECTION DETAIL
1 1/2" = 1'-0"

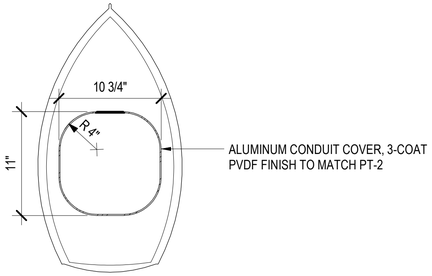

9 SECTION DETAIL
1 1/2" = 1'-0"

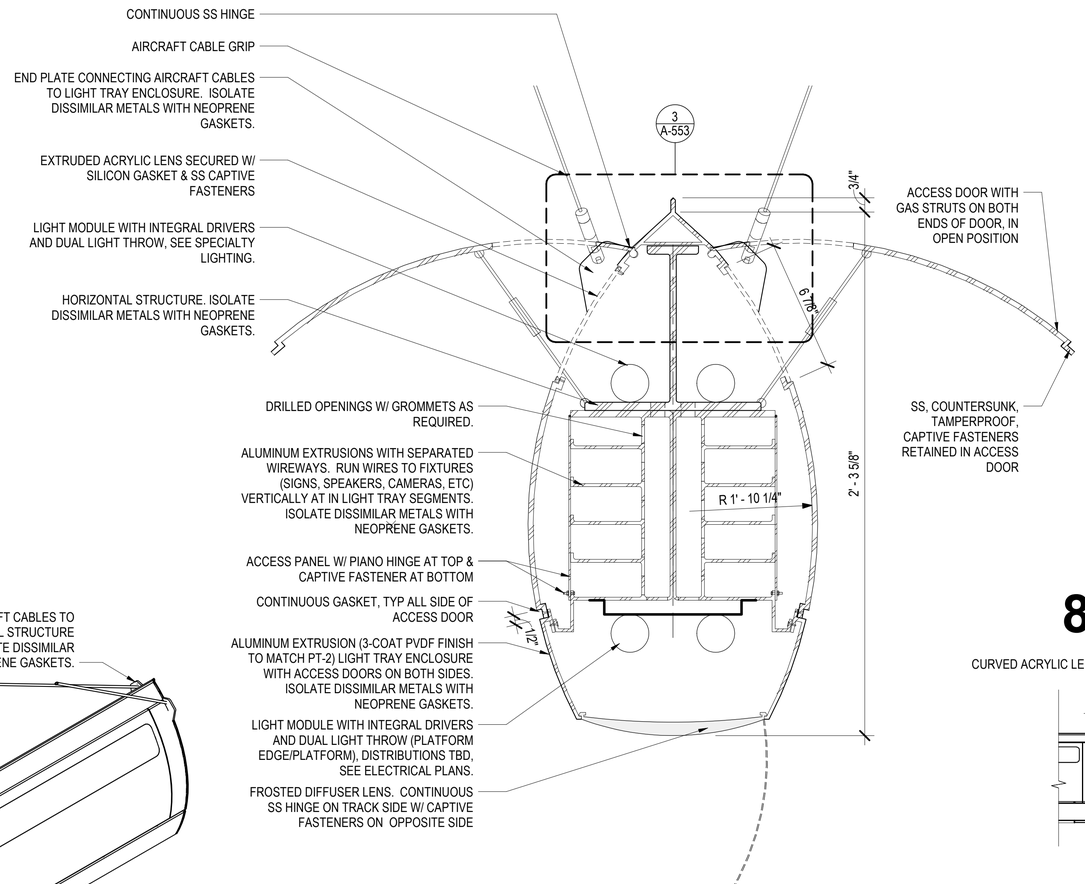

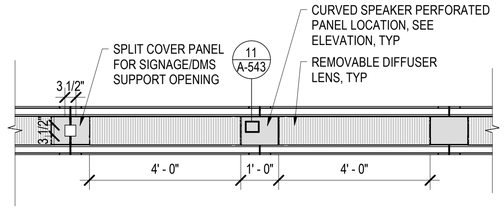

8 RCP - LIGHT TRAY TYP
1/2" = 1'-0"

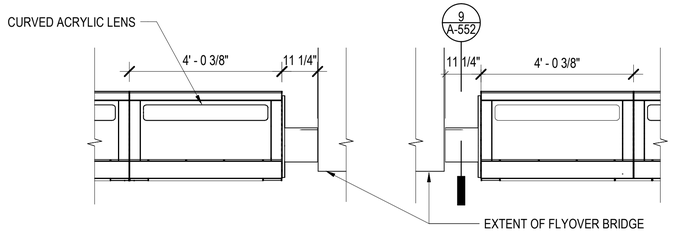

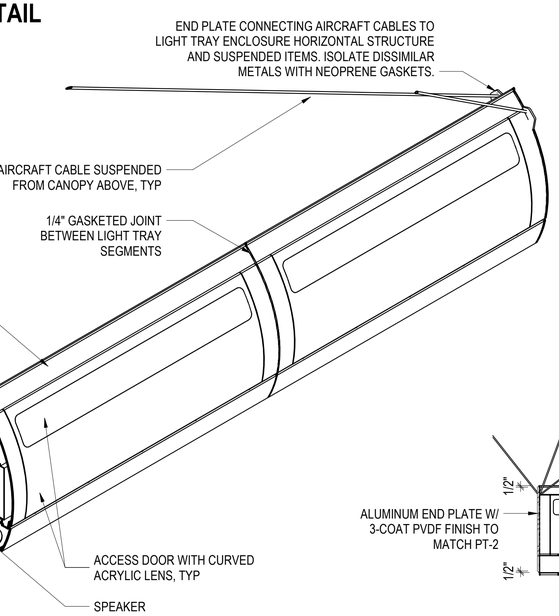

7 SECTION - CABLE & LIGHT TRAY TYP
3" = 1'-0"

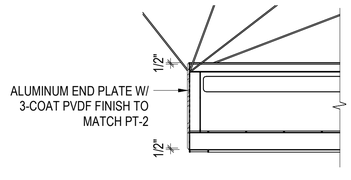

6 ELEVATION - LIGHT TRAY 4' MODULE
1/2" = 1'-0"

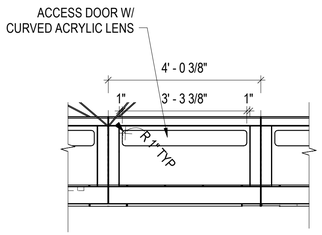

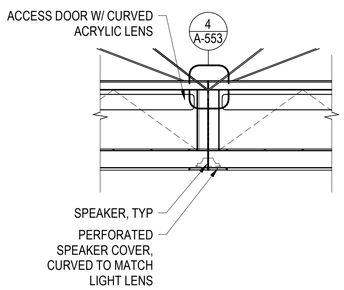

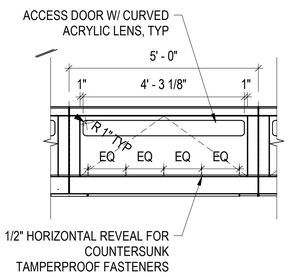

5 ISOMETRIC DETAIL - CABLE AND LIGHT TRAY TYP.

4 ELEVATION - LIGHT TRAY END
1/2" = 1'-0"

3 ELEVATION - LIGHT TRAY 9' MODULE
1/2" = 1'-0"

2 ELEVATION - LIGHT TRAY SPEAKER
1/2" = 1'-0"

1 ELEVATION - LIGHT TRAY TYP
1/2" = 1'-0"

DESIGN BY:										TranSystems TRANSYSTEMS 222 SOUTH RIVERSIDE PLAZA SUITE 610 CHICAGO, ILLINOIS 60606	SOM SKIDMORE, OWINGS & MERRILL LLP 224 SOUTH MICHIGAN AVENUE, SUITE 1000 CHICAGO, ILLINOIS 60604			CDOT CHICAGO DEPARTMENT OF TRANSPORTATION DIVISION OF ENGINEERING	STATE / LAKE LOOP ELEVATED STATION 200 NORTH STATE STREET, CHICAGO, IL 60601	SPEC. NO.
DRAWN BY:		4	7/3/2023	ISSUED FOR BID											CABLE & LIGHT TRAY DETAILS	DRAWING NO. A-552
CHECKED BY:																
APPROVED BY:		0	9/9/2022	ISSUED FOR PERMIT	MN	KH	SD								CDOT PROJECT D-1-209	DATE: 9/9/2022	REVISION NO.
CDOT/APPROVED BY:		NO.	DATE	REVISIONS	DES.	DRW.	CHK.	DCCO	CDOT							

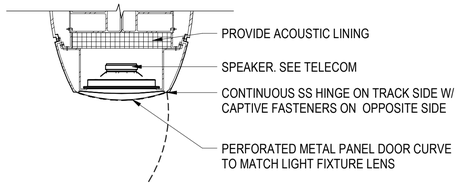

8 SECTION - SPEAKER
1 1/2" = 1'-0"

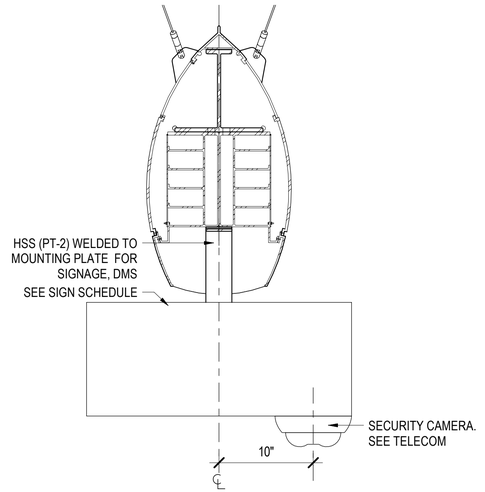

7 SECTION - SIGN
1 1/2" = 1'-0"

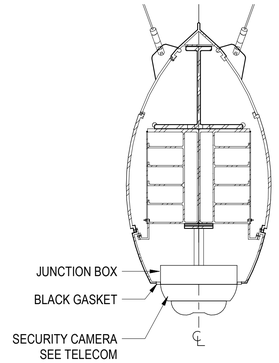

6 SECTION - CAMERA
1 1/2" = 1'-0"

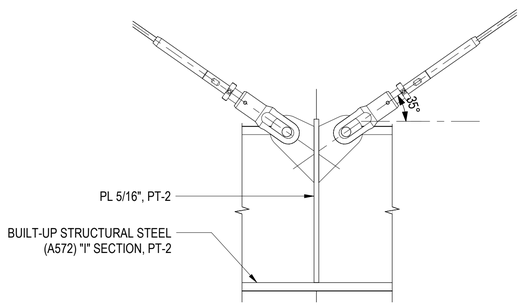

4 ENLARGED DETAIL
3" = 1'-0"

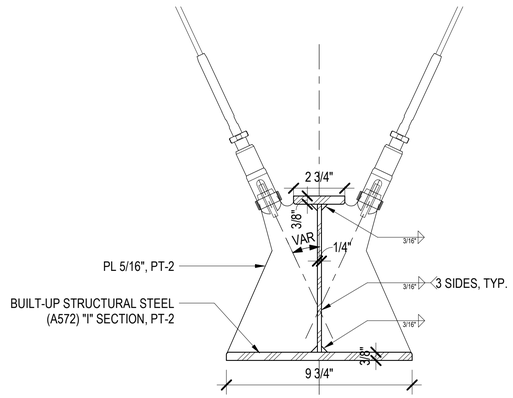

3 SECTION DETAIL
3" = 1'-0"

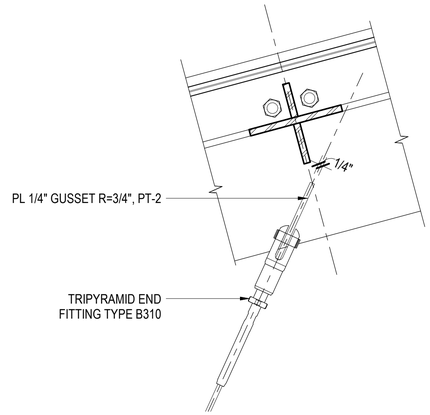

2 SECTION DETAIL
3" = 1'-0"

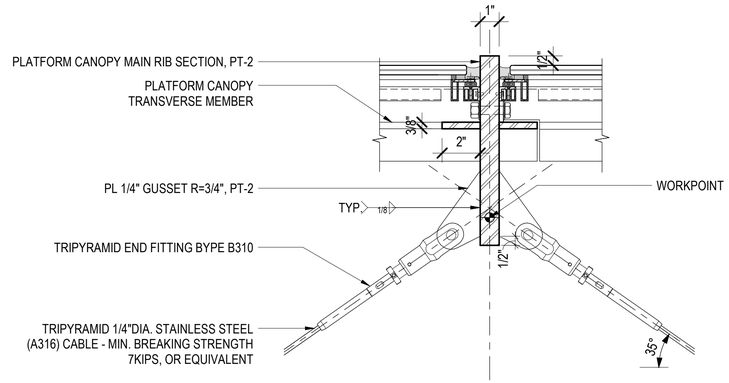

1 SECTION DETAIL
3" = 1'-0"

DESIGN BY:										
DRAWN BY:		4	7/3/2023	ISSUED FOR BID						
CHECKED BY:										
APPROVED BY:		0	9/9/2022	ISSUED FOR PERMIT	MN	KH	SD			
CDOT/APPROVED BY:		NO.	DATE	REVISIONS	DES.	DRW.	CHK.	DCCO	CDOT	

TRANSYSTEMS
222 SOUTH RIVERSIDE PLAZA SUITE 610
CHICAGO, ILLINOIS 60606

SKIDMORE, OWINGS & MERRILL LLP
224 SOUTH MICHIGAN AVENUE, SUITE 1000
CHICAGO, ILLINOIS 60604

CHICAGO DEPARTMENT OF TRANSPORTATION
DIVISION OF ENGINEERING

STATE / LAKE LOOP ELEVATED STATION
200 NORTH STATE STREET, CHICAGO, IL 60601

SPEC. NO.

CABLE & LIGHT TRAY DETAILS

DRAWING NO. A-553

CDOT PROJECT D-1-209 | DATE: 9/9/2022 | REVISION NO.

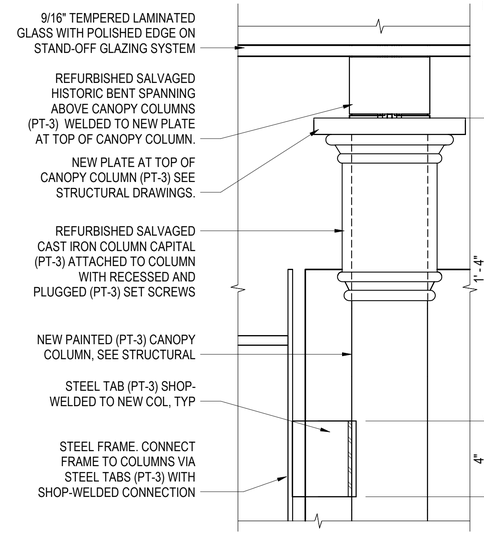

7 SECTION DETAIL-FARE ARRAY CANOPY
3" = 1'-0"

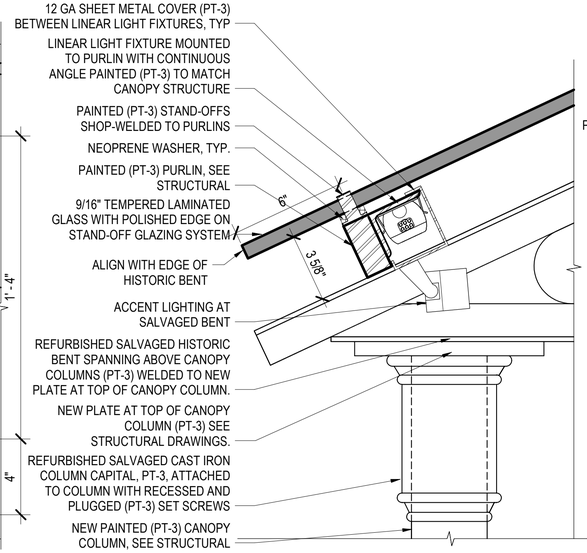

6 SECTION DETAIL-FARE ARRAY CANOPY
3" = 1'-0"

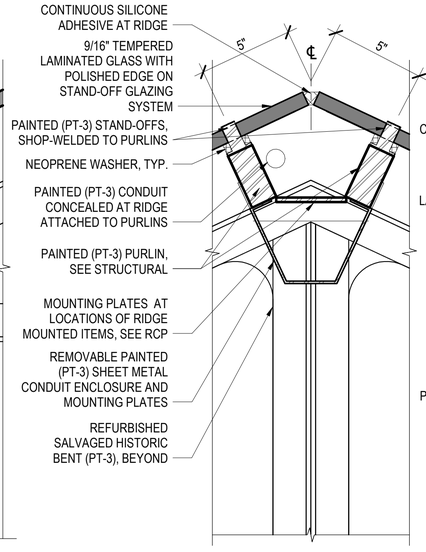

5 SECTION DETAIL-FARE ARRAY CANOPY
3" = 1'-0"

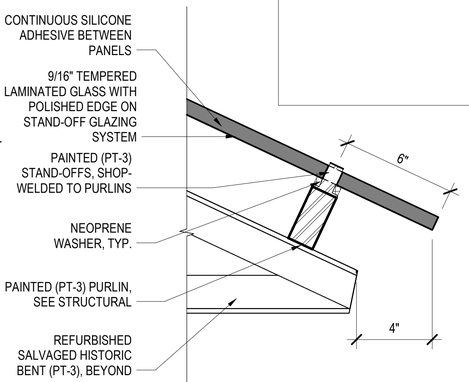

11 SECTION DETAIL - FARE ARRAY CANOPY
3" = 1'-0"

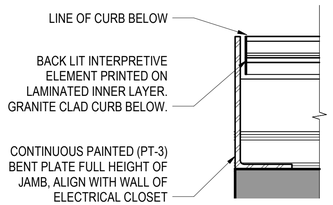

9 PLAN DETAIL INTERPRETIVE ELEMENT JAMB
3" = 1'-0"

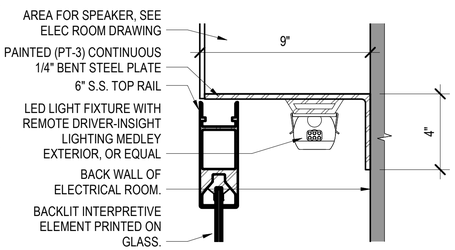

8 SECTION DETAIL- INTERPRETIVE ELEMENT HEAD
3" = 1'-0"

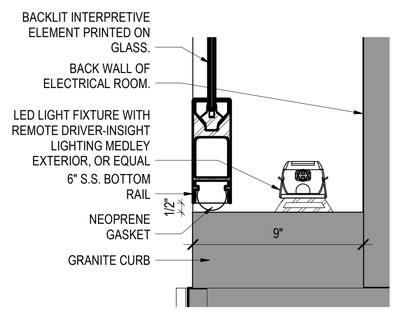

4 SECTION DETAIL - INTERPRETIVE ELEMENT SILL
3" = 1'-0"

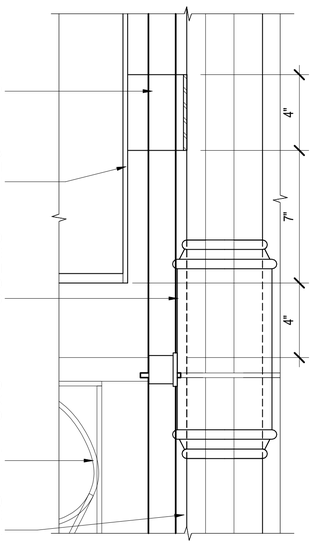

3 SECTION DETAIL-FARE ARRAY CANOPY
3" = 1'-0"

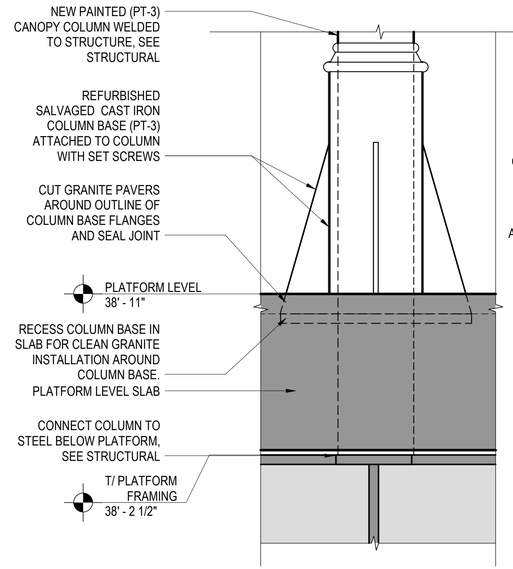

2 SECTION DETAIL-FARE ARRAY CANOPY
3" = 1'-0"

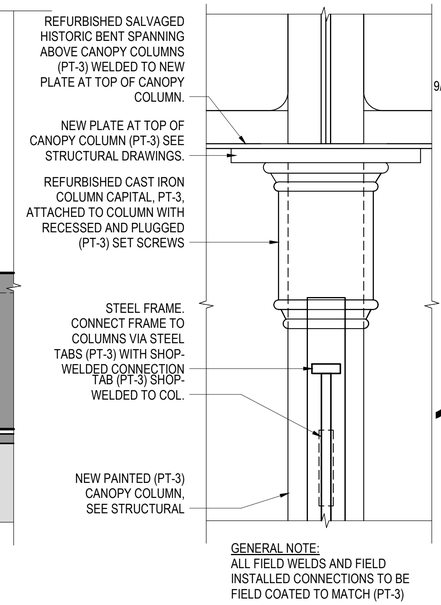

GENERAL NOTE:
ALL FIELD WELDS AND FIELD INSTALLED CONNECTIONS TO BE FIELD COATED TO MATCH (PT-3)

1 SECTION DETAIL-FARE ARRAY CANOPY
3" = 1'-0"

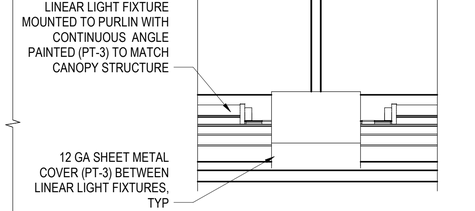

12 SECTION DETAIL - FARE ARRAY CANOPY
3" = 1'-0"

DESIGN BY:										
DRAWN BY:		4	7/3/2023	ISSUED FOR BID						
CHECKED BY:										
APPROVED BY:		0	9/9/2022	ISSUED FOR PERMIT	MN	KH	SD			
CDOT/APPROVED BY:		NO.	DATE	REVISIONS	DES.	DRW.	CHK.	DCCO	CDOT	

TRANSYSTEMS
222 SOUTH RIVERSIDE PLAZA SUITE 610
CHICAGO, ILLINOIS 60606

SKIDMORE, OWINGS & MERRILL LLP
224 SOUTH MICHIGAN AVENUE, SUITE 1000
CHICAGO, ILLINOIS 60604

JOHNSON LASKY KINDELIN ARCHITECTS
230 WEST HURON STREET, SUITE 510
CHICAGO, ILLINOIS 60654

CHICAGO DEPARTMENT OF TRANSPORTATION
DIVISION OF ENGINEERING

STATE / LAKE LOOP ELEVATED STATION
200 NORTH STATE STREET, CHICAGO, IL 60601

SPEC. NO.

FARE ARRAY CANOPY DETAILS

DRAWING NO. A-561

CDOT PROJECT D-1-209 | DATE: 9/9/2022 | REVISION NO.

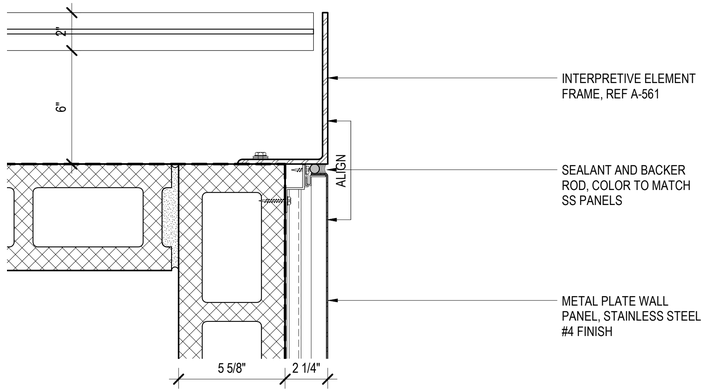

5 PLAN DETAIL
3" = 1'-0"

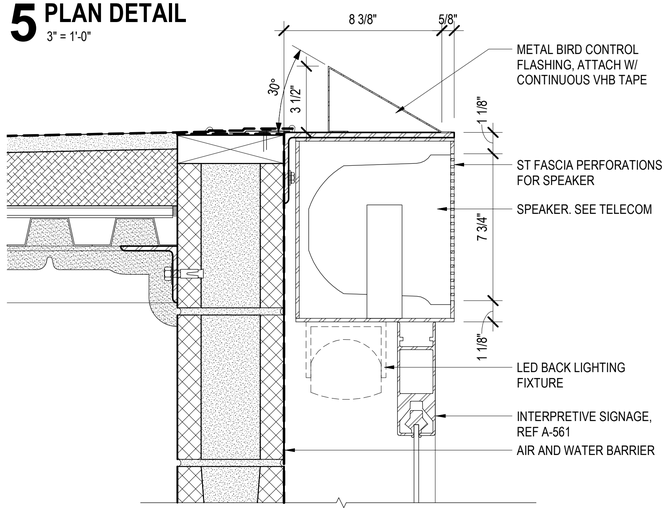

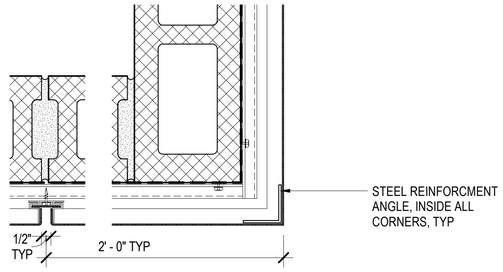

4 PLAN DETAIL
3" = 1'-0"

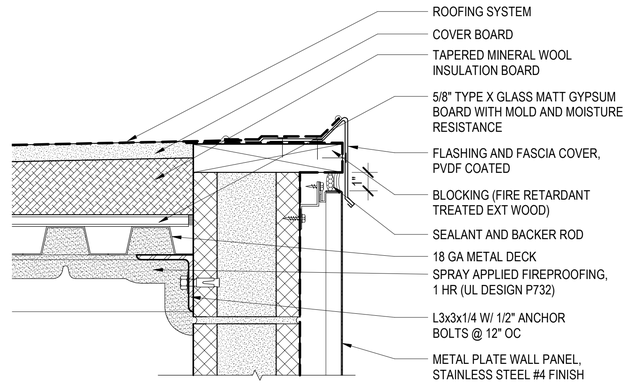

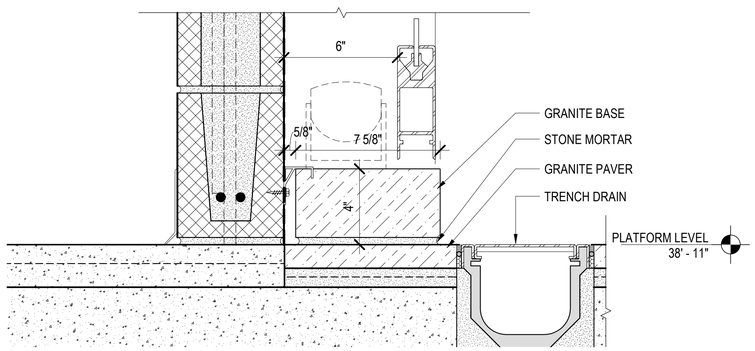

3 SECTION DETAIL
3" = 1'-0"

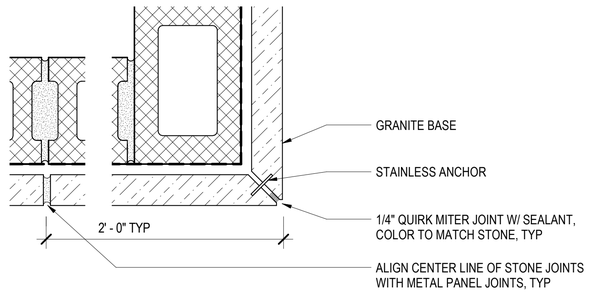

2 PLAN DETAIL
3" = 1'-0"

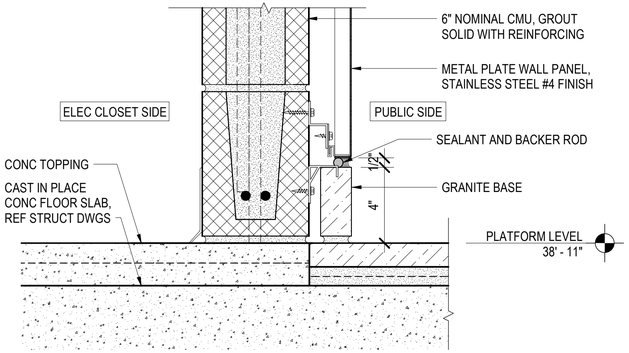

1 SECTION DETAIL
3" = 1'-0"

DESIGN BY:										
DRAWN BY:		4	7/3/2023	ISSUED FOR BID						
CHECKED BY:										
APPROVED BY:		0	9/9/2022	ISSUED FOR PERMIT	MN	KH	SD			
CDOT/APPROVED BY:		NO.	DATE	REVISIONS	DES.	DRW.	CHK.	DCCO	CDOT	

TRANSYSTEMS
222 SOUTH RIVERSIDE PLAZA SUITE 610
CHICAGO, ILLINOIS 60606

SKIDMORE, OWINGS & MERRILL LLP
224 SOUTH MICHIGAN AVENUE, SUITE 1000
CHICAGO, ILLINOIS 60604

CHICAGO DEPARTMENT OF TRANSPORTATION
DIVISION OF ENGINEERING

STATE / LAKE LOOP ELEVATED STATION
200 NORTH STATE STREET, CHICAGO, IL 60601

SPEC. NO.

ELEC CLOSET ENCLOSURE DETAILS

DRAWING NO.
A-571

CDOT PROJECT D-1-209 | DATE: 9/9/2022 | REVISION NO.

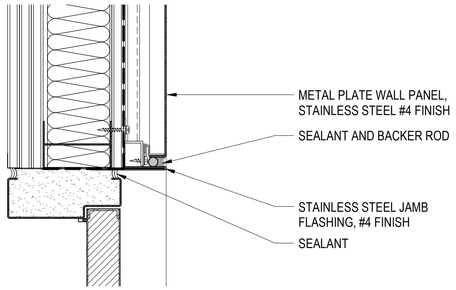

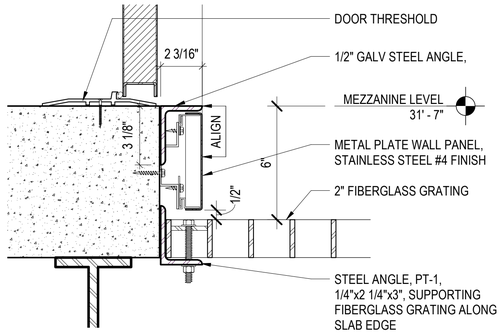

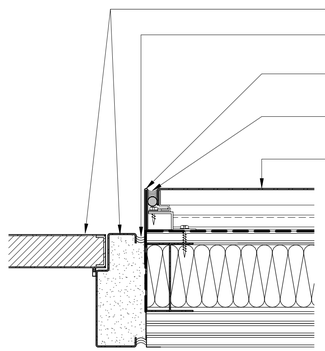

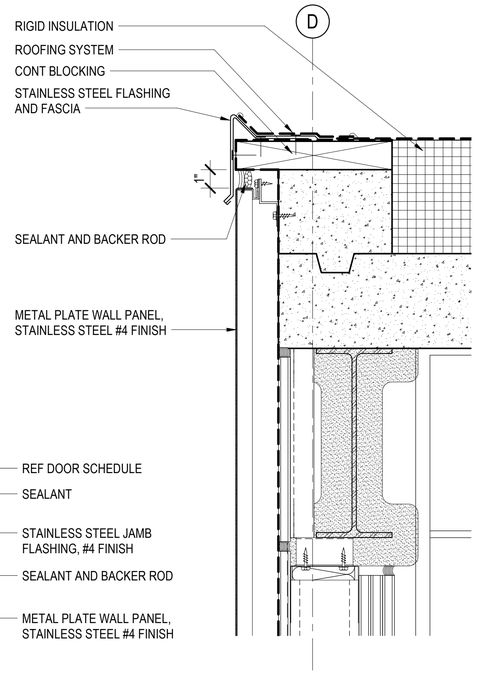

3 SECTION DETAIL
3" = 1'-0"

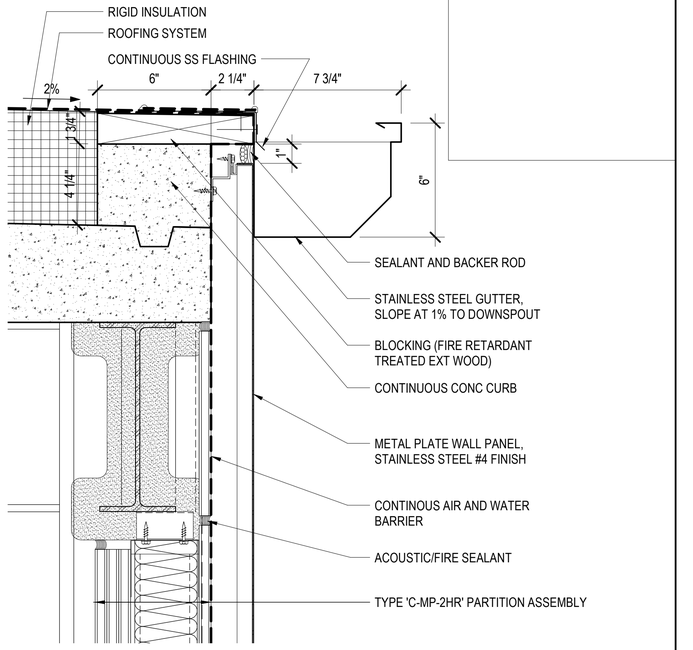

1 SECTION DETAIL
3" = 1'-0"

7 SECTION - ELEC RM DOOR HEAD & THRESHOLD
3" = 1'-0"

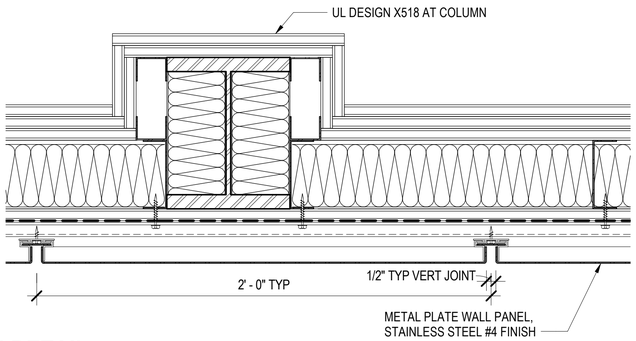

6 PLAN DETAIL
3" = 1'-0"

5 PLAN DETAIL - ELEC RM DOOR JAMB
3" = 1'-0"

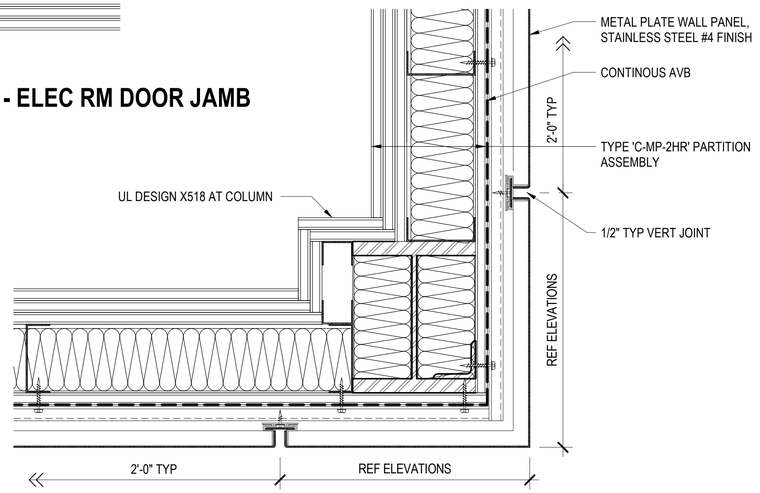

4 PLAN DETAIL
3" = 1'-0"

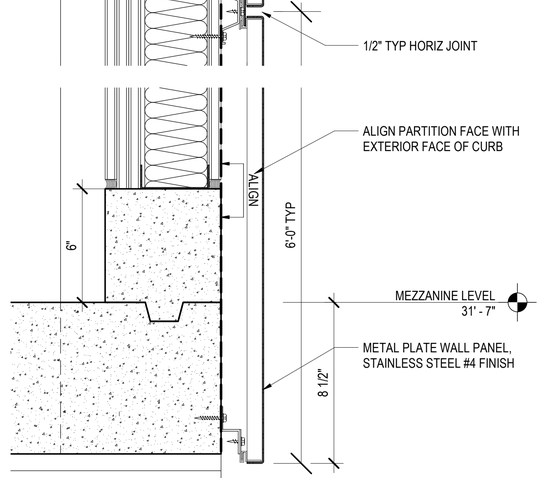

2 SECTION DETAIL
3" = 1'-0"

DESIGN BY:										
DRAWN BY:		4	7/3/2023	ISSUED FOR BID						
CHECKED BY:										
APPROVED BY:		0	9/9/2022	ISSUED FOR PERMIT	MN	KH	SD			
CDOT/APPROVED BY:		NO.	DATE	REVISIONS	DES.	DRW.	CHK.	DCCO	CDOT	

TranSystems
TRANSYSTEMS
222 SOUTH RIVERSIDE PLAZA SUITE 610
CHICAGO, ILLINOIS 60606

SOM
SKIDMORE, OWINGS & MERRILL LLP
224 SOUTH MICHIGAN AVENUE, SUITE 1000
CHICAGO, ILLINOIS 60604

CDOT
CHICAGO DEPARTMENT OF TRANSPORTATION
DIVISION OF ENGINEERING

STATE / LAKE LOOP ELEVATED STATION
200 NORTH STATE STREET, CHICAGO, IL 60601

ELEC AND COM ROOM ENCLOSURE DETAILS

CDOT PROJECT D-1-209

DATE: 9/9/2022

SPEC. NO.

DRAWING NO. A-572

REVISION NO.

DOOR SCHEDULE

Door Mark	Room	Width	Height	Thickness	Door Type	Door Material	Door Finish	Frame Material	Frame Finish	Fire Rating	Hardware Set No.
001A	ELEVATOR MACHINE RM	3' - 0"	7' - 0"	1 3/4"	A	ST STL	ST STL	ST STL	ST STL	90 MIN	11
001B	ELEVATOR MACHINE RM	3' - 2 1/4"	7' - 2"		C	STL PICKET	PT-2				16
002A	ESCALATOR CONTROL RM	3' - 0"	7' - 0"	1 3/4"	A	ST STL	ST STL	ST STL	ST STL	45 MIN	11
002B	ESCALATOR CONTROL RM	3' - 2 1/4"	7' - 2"		C	STL PICKET	PT-2				16
003A	UTILITY RM	3' - 0"	7' - 0"	1 3/4"	A	ST STL	ST STL	ST STL	ST STL		11
003B	UTILITY RM	3' - 2 1/4"	7' - 2"		C	STL PICKET	PT-2				16
011A	ELEVATOR MACHINE RM	3' - 0"	7' - 0"	1 3/4"	A	ST STL	ST STL	ST STL	ST STL	90 MIN	11
011B	ELEVATOR MACHINE RM	3' - 2 1/4"	7' - 2"		C	STL PICKET	PT-2				16
012A	ESCALATOR CONTROL RM	3' - 0"	7' - 0"	1 3/4"	A	ST STL	ST STL	ST STL	ST STL #4	45 MIN	11
012B	ESCALATOR CONTROL RM	3' - 2 1/4"	7' - 2"		C	STL PICKET	PT-2				16
013A	UTILITY RM	3' - 0"	7' - 0"	1 3/4"	A	ST STL	ST STL	STL	PT-2		11
013B	UTILITY RM	3' - 2 1/4"	7' - 2"		C	STL PICKET	PT-2				16
101	ELEVATOR MACHINE RM	3' - 0"	8' - 0"	1 3/4"	A	ST STL	ST STL	ST STL	ST STL	45 MIN	09
102	HUB PANEL	2' - 0"	8' - 0"	1 3/4"	A	ST STL	ST STL	ST STL	ST STL		10
103	JANITOR'S CL	3' - 6"	8' - 0"	1 3/4"	B	ST STL	ST STL	ST STL	ST STL		09
104	TOILET RM	3' - 0"	8' - 0"	1 3/4"	H	ST STL	ST STL	ST STL	ST STL		14
105	ELEC METER	3' - 0"	7' - 0"	1 3/4"	A	ST STL	ST STL	ST STL	ST STL	45 MIN	12
106	ELEC CL	3' - 0"	8' - 0"	1 3/4"	A	ST STL	ST STL	ST STL	ST STL	45 MIN	12
108A	HUB PANEL	2' - 0"	8' - 0"	1 3/4"	A	ST STL	ST STL	ST STL	ST STL		10
108B	HUB PANEL	2' - 5"	8' - 0"		C	STL PICKET	PT-2				16
109	HUB PANEL	2' - 0"	8' - 0"	1 3/4"	A	ST STL	ST STL	ST STL	ST STL		16
109A	N ESCALATOR CAVITY	2' - 4"	8' - 0 1/4"	1/2"	M	GL-2					16
109B	N ESCALATOR CAVITY	2' - 5"	8' - 0"		C	STL PICKET	PT-2				16
111	ELEVATOR MACHINE RM	3' - 0"	8' - 0"	1 3/4"	A	ST STL	ST STL	ST STL	ST STL	45 MIN	09
112	HUB PANEL	2' - 0"	8' - 0"	1 3/4"	A	ST STL	ST STL	ST STL	ST STL		10
113	JANITOR'S CL	3' - 6"	8' - 0"	1 3/4"	B	ST STL	ST STL	ST STL	ST STL		09
114	TOILET RM	3' - 0"	8' - 0"	1 3/4"	H	ST STL	ST STL	ST STL	ST STL		14
115	ELEC CL	6' - 0"	8' - 0"	1 3/4"	L	ST STL	ST STL	ST STL	ST STL	45 MIN	12
118A	HUB PANEL	2' - 0"	8' - 0"	1 3/4"	A	ST STL	ST STL	ST STL	ST STL		10
118B	HUB PANEL	2' - 5"	8' - 0"		C	STL PICKET	PT-2				16
119	HUB PANEL	2' - 0"	8' - 0"	1 3/4"	A	ST STL	ST STL	ST STL	ST STL		16
119A	S ESCALATOR CAVITY	2' - 4"	8' - 0 1/4"	1/2"	M	GL-2					16
119B	S ESCALATOR CAVITY	2' - 5"	8' - 0"		C	STL PICKET	PT-2				16
201	COMM RM	3' - 0"	7' - 0"	1 3/4"	A	ST STL	ST STL	ST STL	ST STL	90 MIN	10
202	ELEC CL	3' - 0"	7' - 0"	1 3/4"	A	ST STL	ST STL	ST STL	ST STL	45 MIN	12
203A	ELEC RM	4' - 0"	7' - 0"	1 3/4"	A	ST STL	ST STL	ST STL	ST STL	90 MIN	12
203B	ELEC RM	6' - 0"	7' - 0"	1 3/4"	D	ST STL	ST STL	ST STL	ST STL	90 MIN	12
G01	EXIT STAIR 1A	5' - 0"	8' - 0"		J	STL PICKET	PT-2				16
G02	STAIR 1B	7' - 4 1/2"	9' - 5"		F1	STL PICKET	PT-2				16
G03	STAIR 2B	6' - 5"	9' - 5"		F2	STL PICKET	PT-2				16
G04	ESC-1	4' - 8"	8' - 0"		J	STL PICKET	PT-2				16
G05	EXIT STAIR 2A	5' - 0"	8' - 0"		J	STL PICKET	PT-2				16
G06	EXIT STAIR 3A	5' - 0"	8' - 0"		J	STL PICKET	PT-2				16
G07	ESC-2	4' - 8"	8' - 0"		J	STL PICKET	PT-2				16
G08	STAIR 3B	7' - 4 1/2"	9' - 5"		F1	STL PICKET	PT-2				16
G09	STAIR 4B	6' - 5"	9' - 5"		F2	STL PICKET	PT-2				16
G10	EXIT STAIR 4A	5' - 0"	8' - 0"		J	STL PICKET	PT-2				16
G11	PLATFORM EXIT GATE	3' - 0"	7' - 1 1/2"		G	ST.STL /GL-4	ST STL	ST STL	ST STL		18
G12	PLATFORM EXIT GATE	3' - 0"	7' - 1 1/2"		G	ST.STL /GL-4	ST STL	ST STL	ST STL		18
G13	PLATFORM EXIT GATE	3' - 0"	7' - 1 1/2"		G	ST.STL /GL-4	ST STL	ST STL	ST STL		18
G14	PLATFORM EXIT GATE	3' - 0"	7' - 1 1/2"		G	ST.STL /GL-4	ST STL	ST STL	ST STL		18
G15	PLATFORM SECURITY GATE	3' - 4"	3' - 3"		H1	STL PICKET	PT-2				21
G16	PLATFORM SECURITY GATE	3' - 4"	3' - 3"		H2	STL PICKET	PT-2				21
G17	PLATFORM SECURITY GATE	3' - 4"	3' - 3"		H2	STL PICKET	PT-2				21
G18	PLATFORM SECURITY GATE	3' - 4"	3' - 3"		H1	STL PICKET	PT-2				21
G19	FARE ARRAY NORTH	3' - 0"	8' - 2"		K	ST STL PICKET	ST STL				18
G20	FARE ARRAY SOUTH	3' - 0"	8' - 2"		K	ST STL PICKET	ST STL				18

NOTE: ALL DOOR FRAMES ASSOCIATED WITH FIRE-RATED DOORS ARE TO BE RATED TO MATCH RATING OF ASSOCIATED DOOR

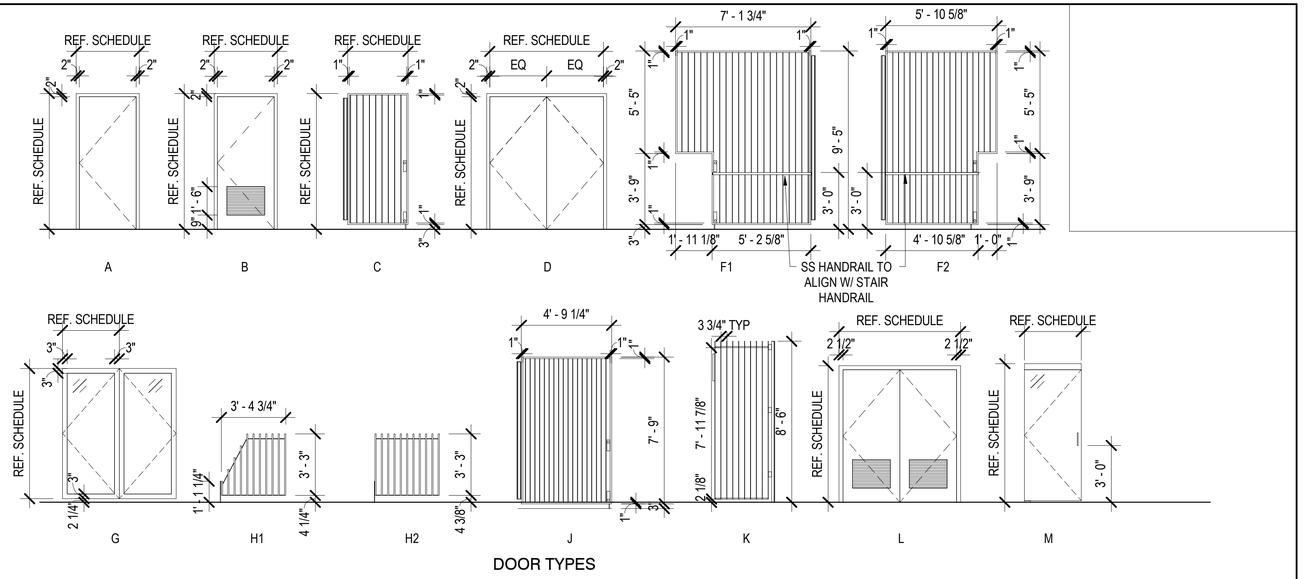

DOOR TYPES

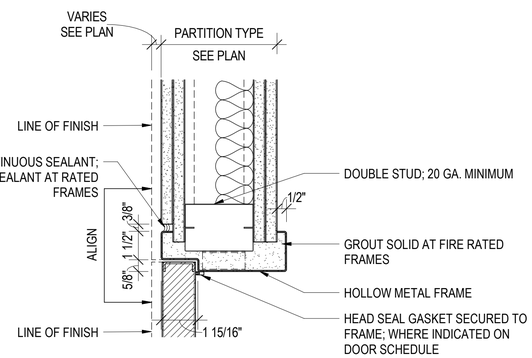

3 DOOR FRAME - HEAD TYPE H5

3" = 1'-0"

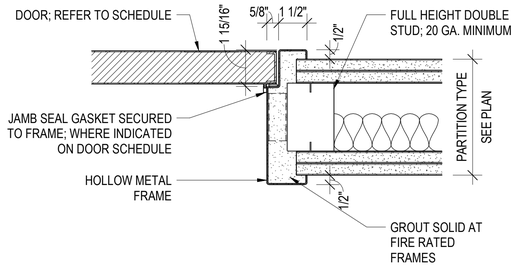

4 DOOR FRAME - JAMB TYPE J1

3" = 1'-0"

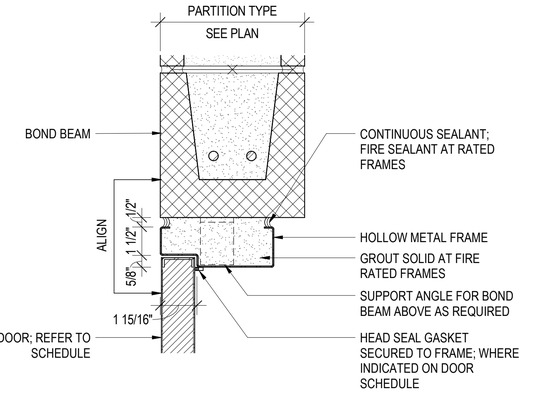

2 DOOR FRAME - HEAD TYPE H14

3" = 1'-0"

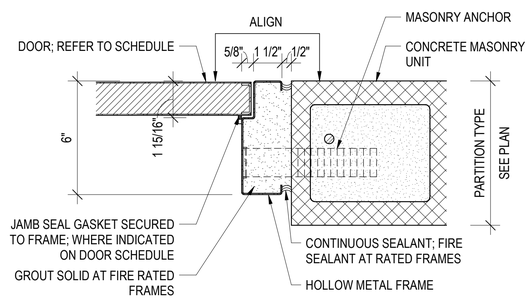

1 DOOR FRAME - JAMB TYPE J14

3" = 1'-0"

DESIGN BY:										
DRAWN BY:		4	7/3/2023	ISSUED FOR BID						
CHECKED BY:		1	11/4/2022	ISSUED FOR PERMIT REVISION 1						
APPROVED BY:		0	9/9/2022	ISSUED FOR PERMIT	MN	KH	SD			
CDOT/APPROVED BY:		NO.	DATE	REVISIONS	DES.	DRW.	CHK.	DCCO	CDOT	

TRANSYSTEMS
222 SOUTH RIVERSIDE PLAZA SUITE 610
CHICAGO, ILLINOIS 60606

SKIDMORE, OWINGS & MERRILL LLP
224 SOUTH MICHIGAN AVENUE, SUITE 1000
CHICAGO, ILLINOIS 60604

CHICAGO DEPARTMENT OF TRANSPORTATION
DIVISION OF ENGINEERING

STATE / LAKE LOOP ELEVATED STATION
200 NORTH STATE STREET, CHICAGO, IL 60601

SPEC. NO.

DOOR SCHEDULE & DETAILS

DRAWING NO. A-601

CDOT PROJECT D-1-209 | DATE: 9/9/2022 | REVISION NO.1

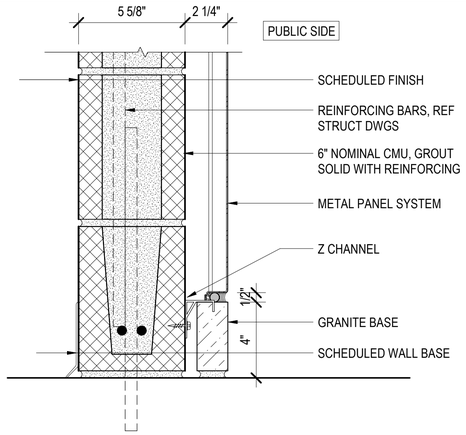

M	
	MP

NON RATED

M	
1	MP

1 HOUR RATED:
UL DESIGN U905

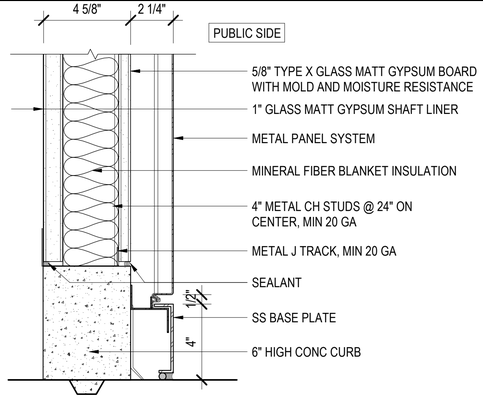

D	
	MP

NON RATED

D	
1	MP

1 HOUR RATED:
UL DESIGN U415

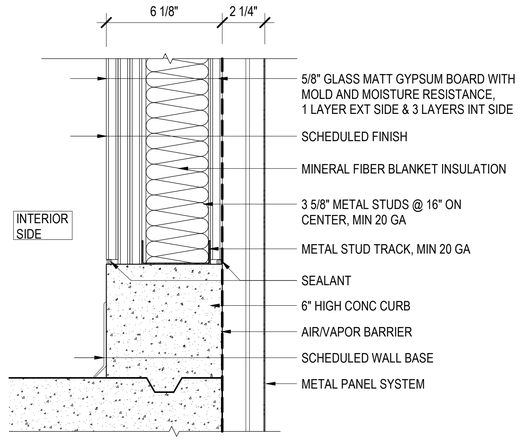

C	
2	MP

2 HOUR RATED:
UL DESIGN U419

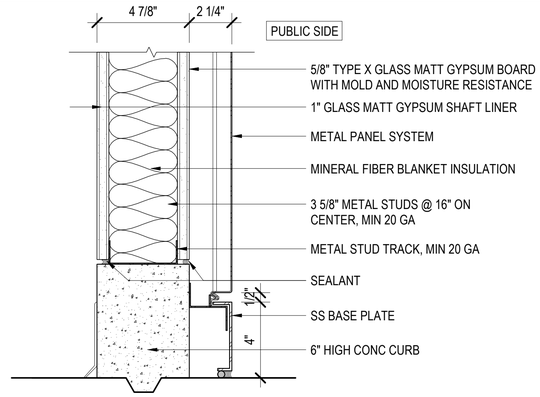

B	
	MP

NON RATED

B	
1	MP

1 HOUR RATED:
UL DESIGN U419

PARTITION TYPE NOTES:

1. REFER TO PLANS FOR PARTITION TYPES AND REQUIRED MINIMUM FIRE RATINGS.
2. ALL GYPSUM BOARD AND STUDS ARE FULL HEIGHT, UNO.
3. ALL GYPSUM BOARD IS 5/8" TYPE X GLASS MATT GYPSUM BOARD WITH MOLD AND MOISTURE RESISTANCE UNO.
4. PARTITIONS ARE DIMENSIONED FROM FACE OF FINISH ON PLANS, UNO.
5. PROVIDE CONTINUOUS ACOUSTICAL SEALANT AT SILL AND HEAD PARTITIONS.
6. TAPE, BED, FLOAT, AND FINISH ALL GYPSUM BOARD CORNERS AND JOINTS READY FOR FINISH (ASTMC 840 LEVEL FOUR FINISH, UNO).
7. FOR FINISHES REFER TO A-604 ROOM FINISH SCHEDULE.
8. PROVIDE CONTINUOUS CAULKING AT ALL DUCT PIPE AND CONDUIT PENETRATIONS THROUGH WALLS.
9. PROVIDE FIRE STOPPING SYSTEMS AT ALL DUCT PIPE AND CONDUIT PENETRATIONS THROUGH WALLS REQUIRING FIRE RATING.
10. PARTITION ASSEMBLIES ARE IDENTIFIED ON PLANS THROUGH THE FOLLOWING PARTITION TAG:

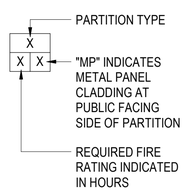

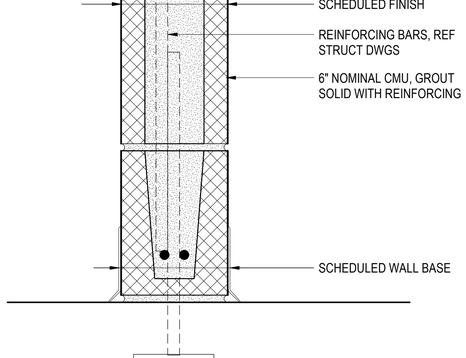

M	

NON RATED

M	
1	

1 HOUR RATED:
UL DESIGN U905

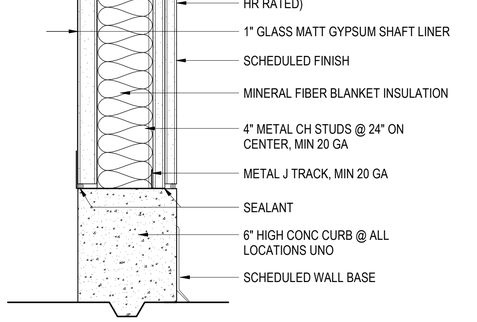

D	

NON RATED

D	
1	

1 HOUR RATED:
UL DESIGN U415

D	
2	

2 HOUR RATED:
UL DESIGN U419

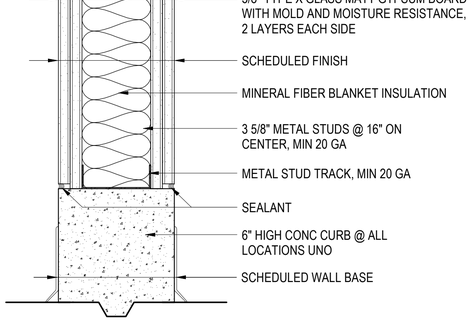

C	
2	

2 HOUR RATED:
UL DESIGN U419

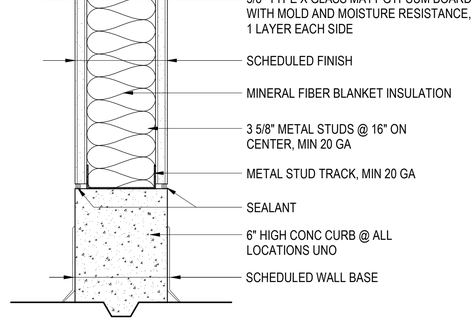

B	

NON RATED

B	
1	

1 HOUR RATED:
UL DESIGN U419

1 PARTITION TYPES
3" = 1'-0"

DESIGN BY:										
DRAWN BY:		4	7/3/2023	ISSUED FOR BID						
CHECKED BY:										
APPROVED BY:		0	9/9/2022	ISSUED FOR PERMIT	MN	KH	SD			
CDOT/APPROVED BY:		NO.	DATE	REVISIONS	DES.	DRW.	CHK.	DCCO	CDOT	

TRANSYSTEMS
222 SOUTH RIVERSIDE PLAZA SUITE 610
CHICAGO, ILLINOIS 60606

SKIDMORE, OWINGS & MERRILL LLP
224 SOUTH MICHIGAN AVENUE, SUITE 1000
CHICAGO, ILLINOIS 60604

CHICAGO DEPARTMENT OF TRANSPORTATION
DIVISION OF ENGINEERING

STATE / LAKE LOOP ELEVATED STATION
200 NORTH STATE STREET, CHICAGO, IL 60601

PARTITION TYPES

CDOT PROJECT D-1-209 | DATE: 9/9/2022

SPEC. NO.

DRAWING NO. A-602

REVISION NO.

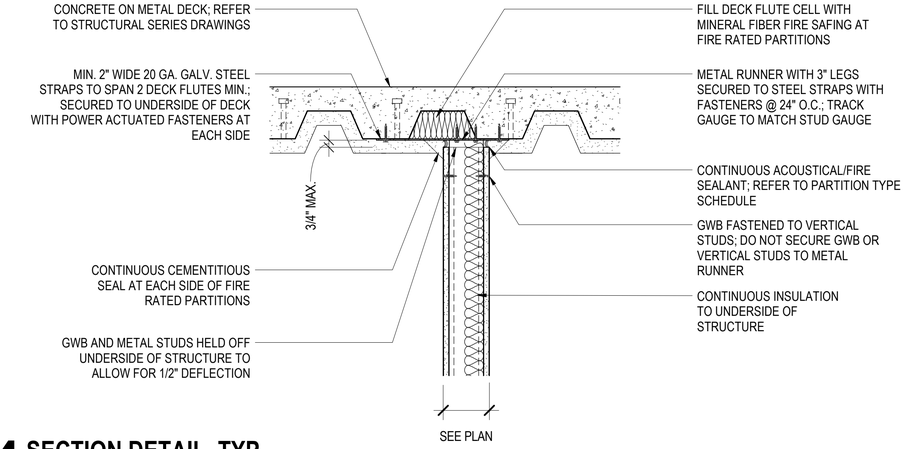

4 SECTION DETAIL, TYP
1 1/2" = 1'-0"

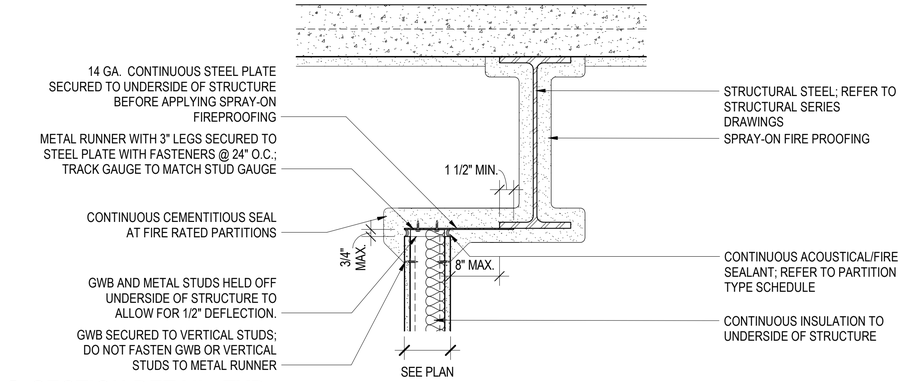

1 SECTION DETAIL, TYP
1 1/2" = 1'-0"

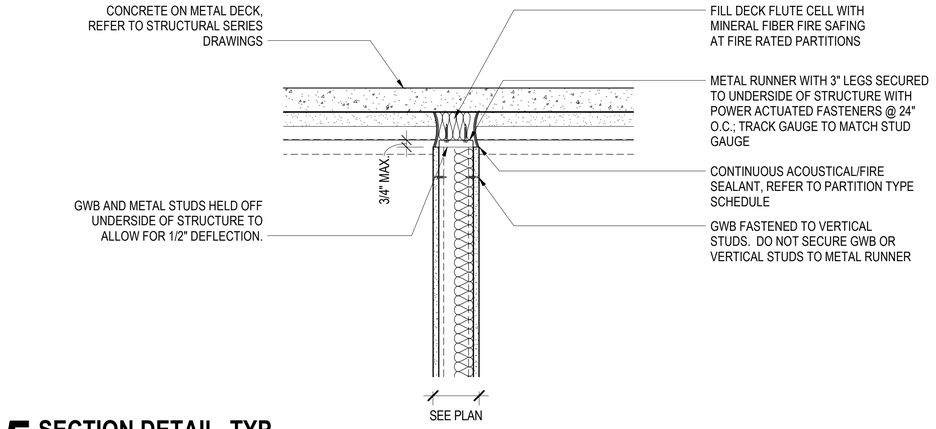

5 SECTION DETAIL, TYP
1 1/2" = 1'-0"

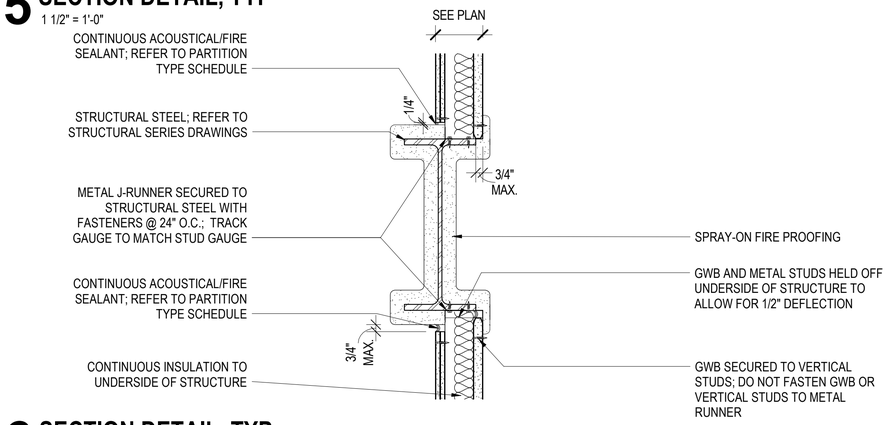

6 SECTION DETAIL, TYP
1 1/2" = 1'-0"

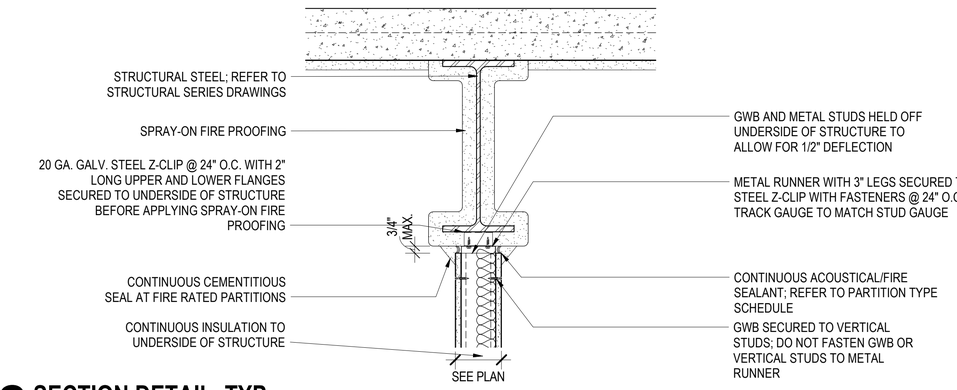

2 SECTION DETAIL, TYP
1 1/2" = 1'-0"

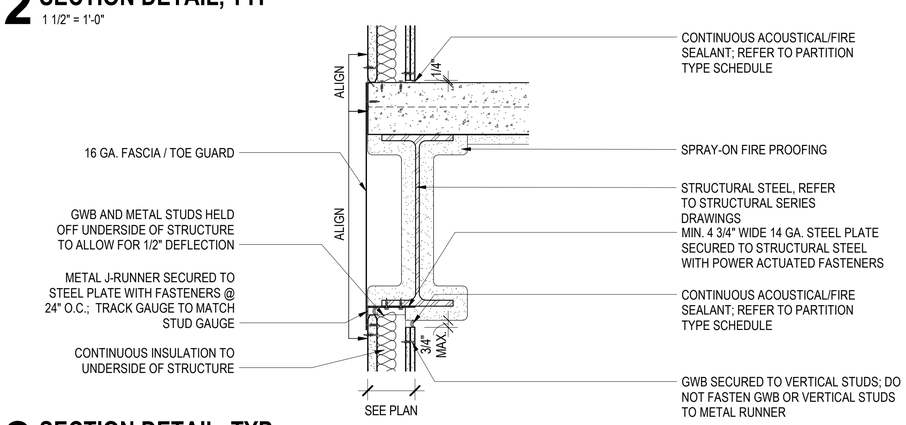

3 SECTION DETAIL, TYP
1 1/2" = 1'-0"

DESIGN BY:										
DRAWN BY:		4	7/3/2023	ISSUED FOR BID						
CHECKED BY:										
APPROVED BY:		0	9/9/2022	ISSUED FOR PERMIT	MN	KH	SD			
CDOT/APPROVED BY:		NO.	DATE	REVISIONS	DES.	DRW.	CHK.	DCCO	CDOT	

TRANSYSTEMS
222 SOUTH RIVERSIDE PLAZA SUITE 610
CHICAGO, ILLINOIS 60606

SKIDMORE, OWINGS & MERRILL LLP
224 SOUTH MICHIGAN AVENUE, SUITE 1000
CHICAGO, ILLINOIS 60604

CHICAGO DEPARTMENT OF TRANSPORTATION
DIVISION OF ENGINEERING

STATE / LAKE LOOP ELEVATED STATION
200 NORTH STATE STREET, CHICAGO, IL 60601

SPEC. NO.

PARTITION DETAILS

DRAWING NO. A-603

CDOT PROJECT D-1-209 | DATE: 9/9/2022 | REVISION NO.

ROOM FINISH SCHEDULE								
ROOM NO.	ROOM NAME	FLOOR FINISH	BASE	WALL NORTH	WALL EAST	WALL SOUTH	WALL WEST	CEILING FINISH
SIDEWALK LEVEL								
001	ELEV MACH RM	EPF-1	VWB-1	PT-2	PT-2	PT-2	PT-2	EC
002	ESC CONTROL RM	EPF-1	VWB-1	PT-2	PT-2	PT-2	PT-2	EC
003	UTILITY RM	EPF-1	VWB-1	PT-2	PT-2	PT-2	PT-2	EC
011	ELEV MACH RM	EPF-1	VWB-1	PT-2	PT-2	PT-2	PT-2	EC
012	ESC CONTROL RM	EPF-1	VWB-1	PT-2	PT-2	PT-2	PT-2	EC
013	UTILITY RM	EPF-1	VWB-1	PT-2	PT-2	PT-2	PT-2	EC
MEZZANINE LEVEL								
201	COMM RM	EPF-1	VWB-1	PT-2	PT-2	PT-2	PT-2	EC
202	ELEC CL	EPF-1	VWB-1	PT-2	PT-2	PT-2	PT-2	EC
203	ELEC RM	EPF-1	VWB-1	PT-2	PT-2	PT-2	PT-2	EC
PLATFORM LEVEL								
101	ELEV MACH RM	EPF-1	VWB-1	PT-2	PT-2	PT-2	PT-2	EC
102	HUB PANEL	EPF-1	VWB-1	PT-2	PT-2	PT-2	PT-2	EC
103	JANITOR	EPF-1	CT-1	CT-1	CT-1	CT-1	CT-1	GYP, PT-2
104	TOILET	EPF-1	CT-1	CT-1	CT-1	CT-1	CT-1	GYP, PT-2
105	ELEC METER	EPF-1	VWB-1	PT-2	PT-2	PT-2	PT-2	EC
106	ELEC CL	EPF-1	VWB-1	PT-2	PT-2	PT-2	PT-2	EC
107	CAK	-	-	-	-	-	-	-
108	HUB PANEL	EPF-1	VWB-1	PT-2	PT-2	PT-2	PT-2	EC
109	HUB PANEL	EPF-1	VWB-1	PT-2	PT-2	PT-2	PT-2	EC
111	ELEV MACH RM	EPF-1	VWB-1	PT-2	PT-2	PT-2	PT-2	EC
112	HUB PANEL	EPF-1	VWB-1	PT-2	PT-2	PT-2	PT-2	EC
113	JANITOR	EPF-1	CT-1	CT-1	CT-1	CT-1	CT-1	GYP, PT-2
114	TOILET	EPF-1	CT-1	CT-1	CT-1	CT-1	CT-1	GYP, PT-2
115	ELEC CL	EPF-1	VWB-1	PT-2	PT-2	PT-2	PT-2	EC
117	CAK	-	-	-	-	-	-	-
118	HUB PANEL	EPF-1	VWB-1	PT-2	PT-2	PT-2	PT-2	EC
119	HUB PANEL	EPF-1	VWB-1	PT-2	PT-2	PT-2	PT-2	EC

FINISH SCHEDULE LEGEND

EC	EXPOSED CONSTRUCTION
EPF-1	EPOXY RESINOUS FLOORING
PT	PAINT
CT-1	CERAMIC TILE
VWB-1	VINYL WALL BASE

DESIGN BY:										
DRAWN BY:		4	7/3/2023	ISSUED FOR BID						
CHECKED BY:										
APPROVED BY:		0	9/9/2022	ISSUED FOR PERMIT	MN	KH	SD			
CDOT/APPROVED BY:		NO.	DATE	REVISIONS	DES.	DRW.	CHK.	DCCO	CDOT	

TRANSYSTEMS
222 SOUTH RIVERSIDE PLAZA SUITE 610
CHICAGO, ILLINOIS 60606

SKIDMORE, OWINGS & MERRILL LLP
224 SOUTH MICHIGAN AVENUE, SUITE 1000
CHICAGO, ILLINOIS 60604

CHICAGO DEPARTMENT
OF TRANSPORTATION
DIVISION OF ENGINEERING

STATE / LAKE LOOP ELEVATED STATION
200 NORTH STATE STREET, CHICAGO, IL 60601

ROOM FINISH SCHEDULE

CDOT PROJECT D-1-209

DATE: 9/9/2022

SPEC. NO.

DRAWING NO. A-604

REVISION NO.

NOTE: ARTWORK VARIES BY COMPASS ROSE LOCATION. SEE A-702
GR-2A ARTWORK IS SANDBLASTED 1/4" IN DEPTH & PAINTED W/ LITHICHROME IN BLACK. SEE SECTION DETAIL

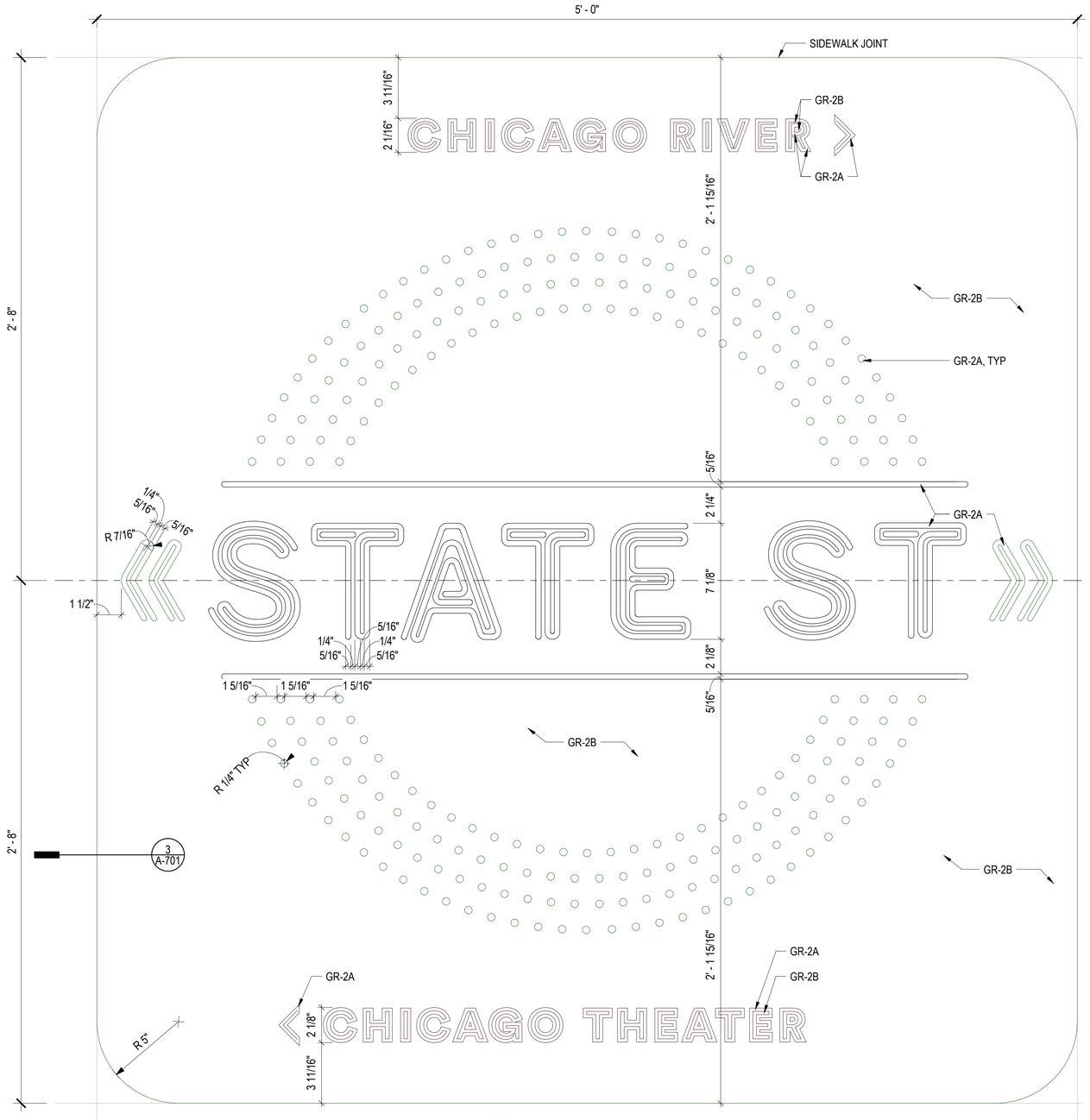

2 ENLARGED PLAN - COMPASS ROSE LARGE
3" = 1'-0"

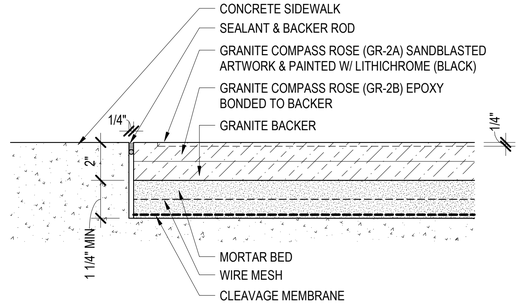

3 SECTION DETAIL - COMPASS ROSE
3" = 1'-0"

NOTE: SEE A-702 FOR ARTWORK.

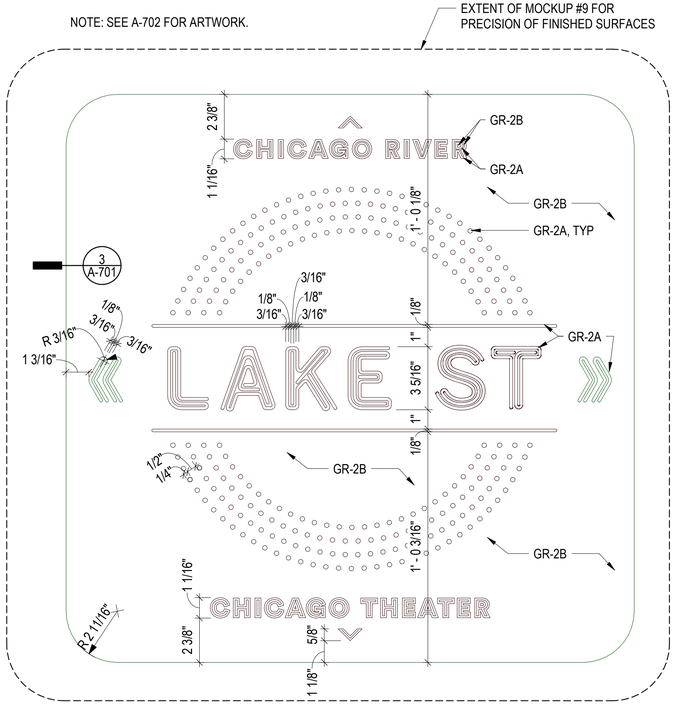

1 ENLARGED PLAN - COMPASS ROSE SMALL
3" = 1'-0"

DESIGN BY:										
DRAWN BY:		4	7/3/2023	ISSUED FOR BID						
CHECKED BY:										
APPROVED BY:		0	9/9/2022	ISSUED FOR PERMIT	MN	KH	SD			
CDOT/APPROVED BY:		NO.	DATE	REVISIONS	DES.	DRW.	CHK.	DCCO	CDOT	

TRANSYSTEMS
222 SOUTH RIVERSIDE PLAZA SUITE 610
CHICAGO, ILLINOIS 60606

SKIDMORE, OWINGS & MERRILL LLP
224 SOUTH MICHIGAN AVENUE, SUITE 1000
CHICAGO, ILLINOIS 60604

CHICAGO DEPARTMENT OF TRANSPORTATION
DIVISION OF ENGINEERING

STATE / LAKE LOOP ELEVATED STATION

SPEC. NO.

COMPASS ROSE

DRAWING NO. A-701

CDOT PROJECT D-1-209

DATE: 9/9/2022

REVISION NO.

BASE OF ST-1A

BASE OF ST-1B

BASE OF ST-3B

NW & SW CORNERS OF STATE & LAKE

NE & SE CORNERS OF STATE & LAKE

BASE OF ST-3B

BASE OF ST-4A

1 COMPASS ROSE ARTWORK

1 1/2" = 1'-0"

DESIGN BY:										
DRAWN BY:		4	7/3/2023	ISSUED FOR BID						
CHECKED BY:										
APPROVED BY:		0	9/9/2022	ISSUED FOR PERMIT	MN	KH	SD			
CDOT/APPROVED BY:		NO.	DATE	REVISIONS	DES.	DRW.	CHK.	DCCO	CDOT	

TRANSYSTEMS
222 SOUTH RIVERSIDE PLAZA SUITE 610
CHICAGO, ILLINOIS 60606

SKIDMORE, OWINGS & MERRILL LLP
224 SOUTH MICHIGAN AVENUE, SUITE 1000
CHICAGO, ILLINOIS 60604

CHICAGO DEPARTMENT OF TRANSPORTATION
DIVISION OF ENGINEERING

STATE / LAKE LOOP ELEVATED STATION
200 NORTH STATE STREET, CHICAGO, IL 60601

SPEC. NO.

COMPASS ROSE ARTWORK

DRAWING NO. A-702

CDOT PROJECT D-1-209 | DATE: 9/9/2022 | REVISION NO.

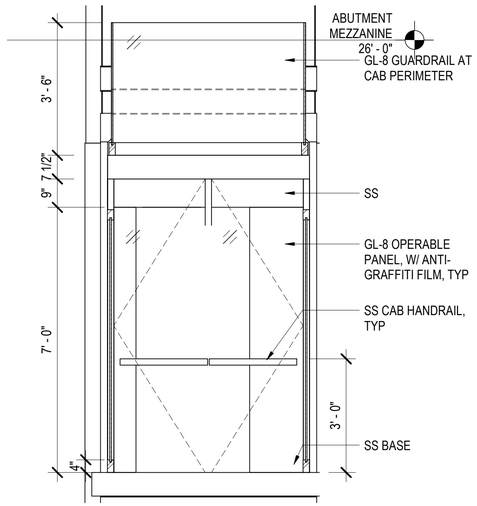

4 INTERIOR ELEVATION
1/2" = 1'-0"

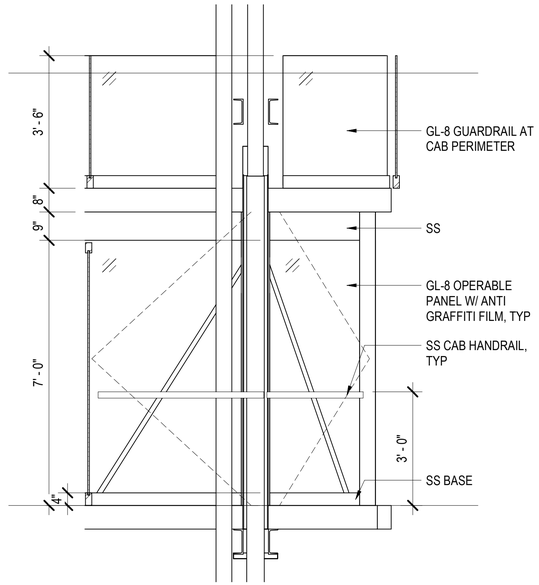

3 INTERIOR ELEVATION
1/2" = 1'-0"

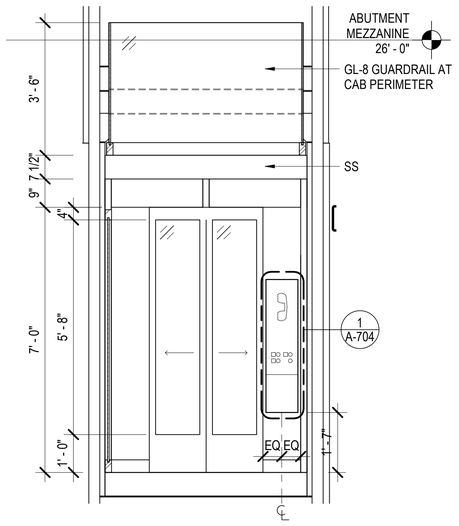

2 INTERIOR ELEVATION
1/2" = 1'-0"

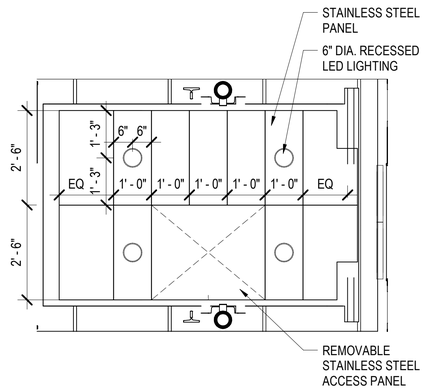

1 ENLARGED RCP
1/2" = 1'-0"

DESIGN BY:									
DRAWN BY:		4	7/3/2023	ISSUED FOR BID					
CHECKED BY:									
APPROVED BY:		0	9/9/2022	ISSUED FOR PERMIT	MN	KH	SD		
CDOT/APPROVED BY:		NO.	DATE	REVISIONS	DES.	DRW.	CHK.	DCCO	CDOT

TRANSYSTEMS
222 SOUTH RIVERSIDE PLAZA SUITE 610
CHICAGO, ILLINOIS 60606

SKIDMORE, OWINGS & MERRILL LLP
224 SOUTH MICHIGAN AVENUE, SUITE 1000
CHICAGO, ILLINOIS 60604

CHICAGO DEPARTMENT
OF TRANSPORTATION
DIVISION OF ENGINEERING

STATE / LAKE LOOP ELEVATED STATION
200 NORTH STATE STREET, CHICAGO, IL 60601

SPEC. NO.

ELEVATOR CAB INTERIOR

DRAWING NO.
A-703

CDOT PROJECT D-1-209 | DATE: 9/9/2022 | REVISION NO.

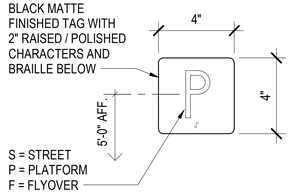

7 ELEVATOR JAMB TAG
3" = 1'-0"

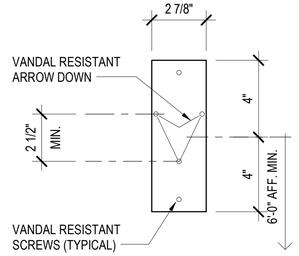

6 ELEVATOR HALL LANTERN - DN
3" = 1'-0"

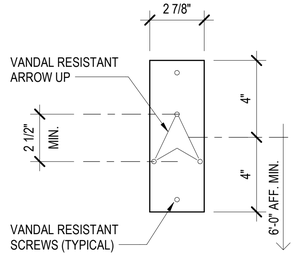

5 ELEVATOR HALL LANTERN - UP
3" = 1'-0"

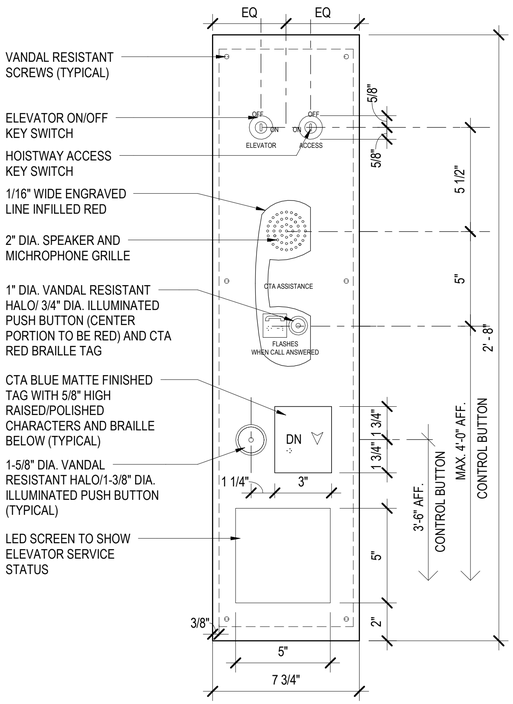

4 ELEVATOR CALL - DN
3" = 1'-0"

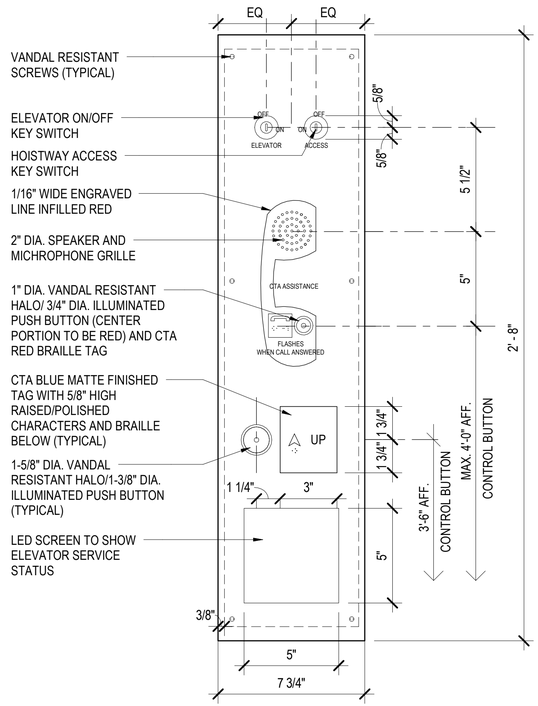

3 ELEVATOR CALL - UP
3" = 1'-0"

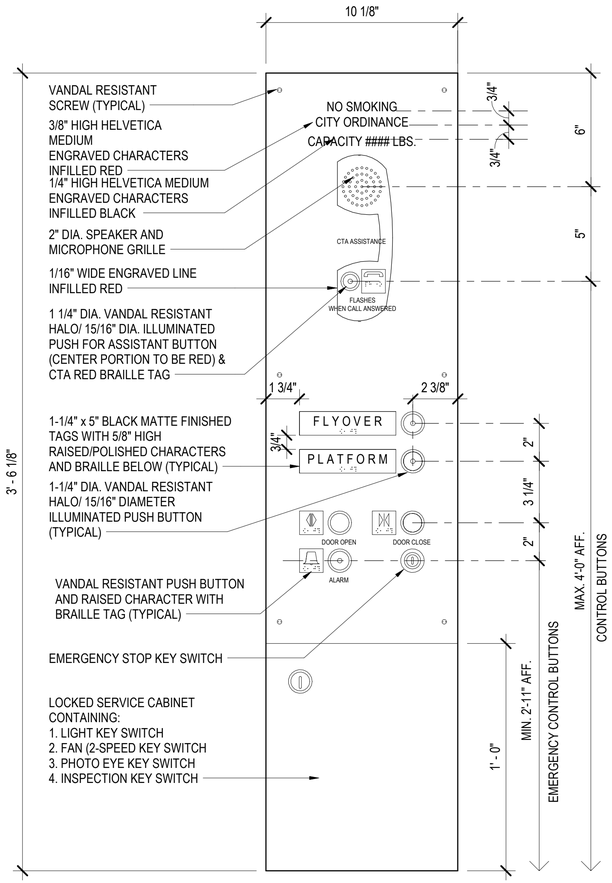

2 ELEVATOR CAB OPERATING PANEL - ELV3/4
3" = 1'-0"

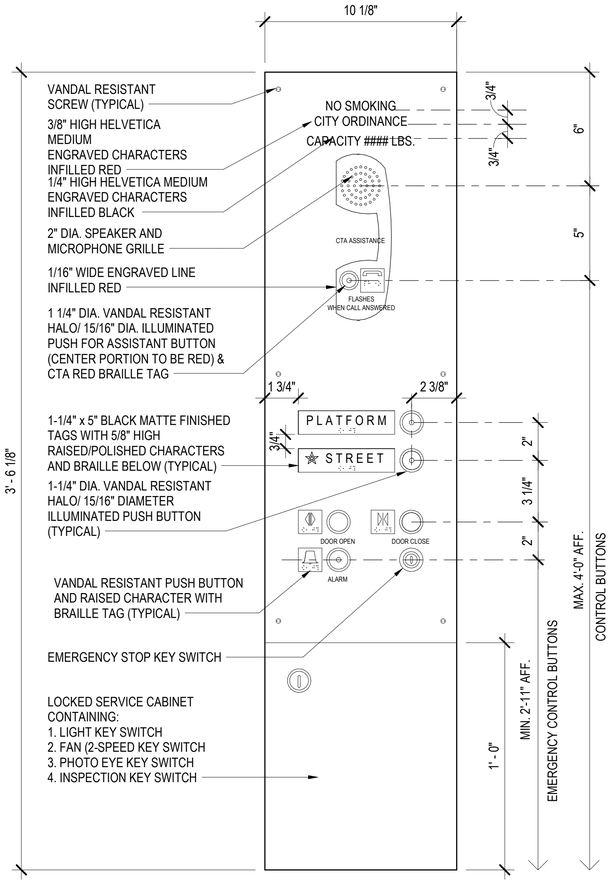

1 ELEVATOR CAB OPERATING PANEL - ELV1/2
3" = 1'-0"

DESIGN BY:										
DRAWN BY:		4	7/3/2023	ISSUED FOR BID						
CHECKED BY:										
APPROVED BY:		0	9/9/2022	ISSUED FOR PERMIT	MN	KH	SD			
CDOT/APPROVED BY:		NO.	DATE	REVISIONS	DES.	DRW.	CHK.	DCCO	CDOT	

TRANSYSTEMS
222 SOUTH RIVERSIDE PLAZA SUITE 610
CHICAGO, ILLINOIS 60606

SKIDMORE, OWINGS & MERRILL LLP
224 SOUTH MICHIGAN AVENUE, SUITE 1000
CHICAGO, ILLINOIS 60604

CHICAGO DEPARTMENT
OF TRANSPORTATION
DIVISION OF ENGINEERING

STATE / LAKE LOOP ELEVATED STATION
200 NORTH STATE STREET, CHICAGO, IL 60601

SPEC. NO.

ELEVATOR HALL CALL & INTERIOR PANEL

DRAWING NO.
A-704

CDOT PROJECT D-1-209

DATE: 9/9/2022

REVISION NO.

SHEET NOTES:
1. PROVIDE DOORS WITH:
   A. DEADBOLT LOCK. KEYED OUTSIDE, THUMBTURN INSIDE
   B. WEATHERSTRIPPING
   C. SS PULLS OUTSIDE & INSIDE
2. PROVIDE WINDOWS WITH:
   A. VERTICAL SIDEBOLT LOCK INTO COUNTER
   B. RUBBER GASKETING & SS CLOSURE STRIP AT GLASS JOINTS
   C. RUBBER STOPS IN SLIDE TRACKS
3. PROVIDE (2) CORD GROMMETS IN EACH WORK SURFACE
4. NO EXPOSED PANEL FASTENERS ON FLOOR
5. PROVIDE DUPLEX OUTLET AT EACH WORK SURFACE

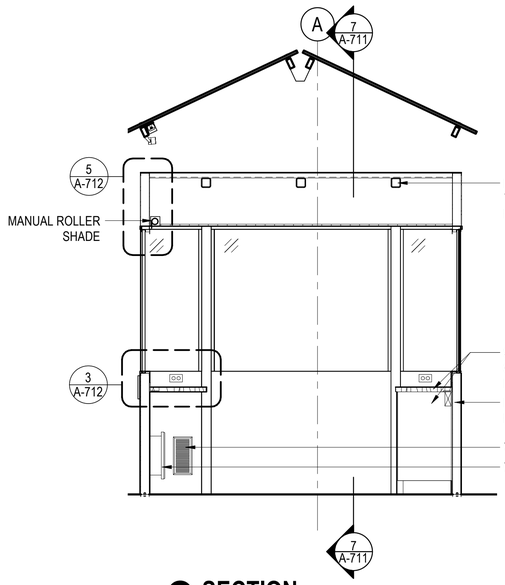

9 SECTION
1/2" = 1'-0"

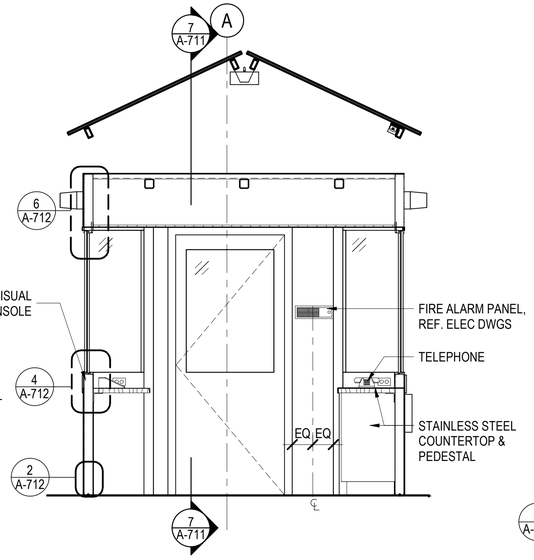

8 SECTION
1/2" = 1'-0"

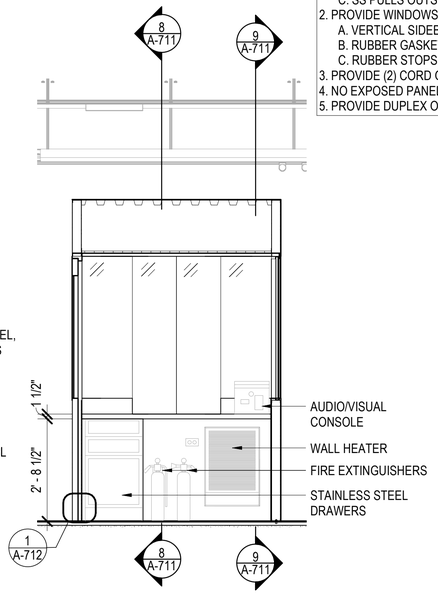

7 SECTION
1/2" = 1'-0"

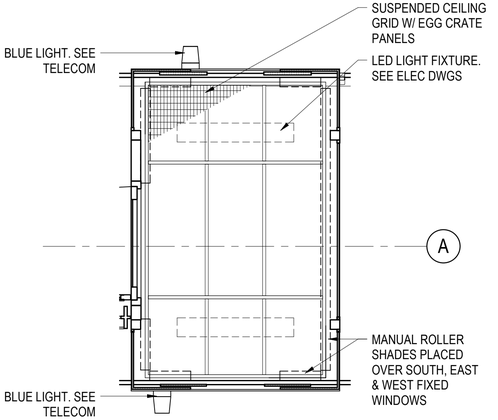

6 REFLECTED CEILING PLAN
1/2" = 1'-0"

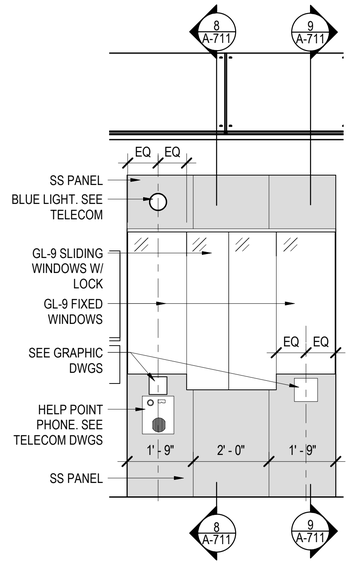

5 ELEVATION
1/2" = 1'-0"

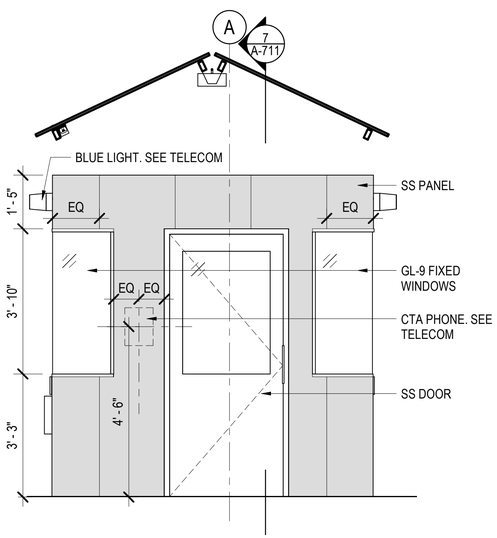

4 ELEVATION
1/2" = 1'-0"

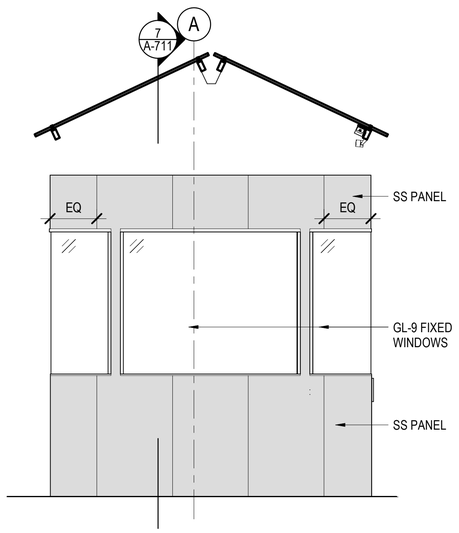

3 ELEVATION
1/2" = 1'-0"

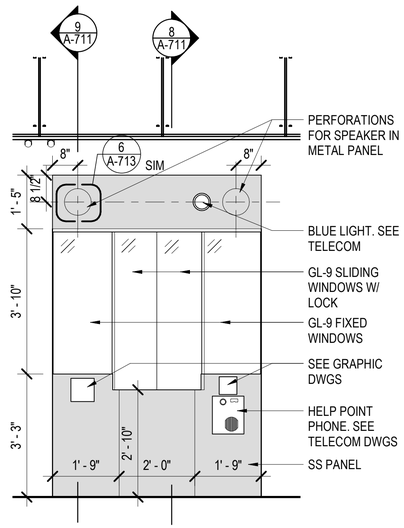

2 ELEVATION
1/2" = 1'-0"

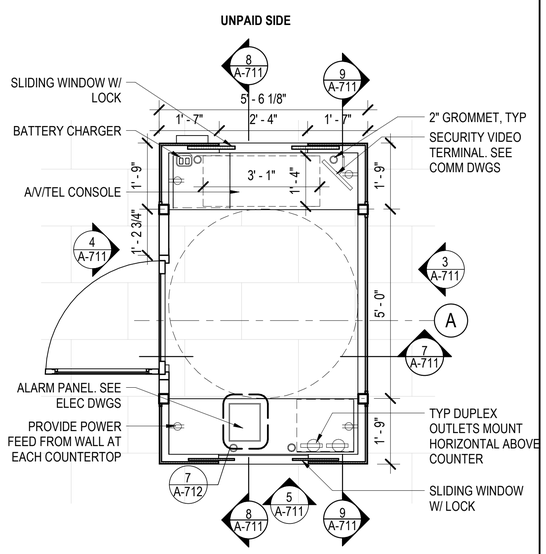

1 ENLARGED PLAN
1/2" = 1'-0"

DESIGN BY:										
DRAWN BY:		4	7/3/2023	ISSUED FOR BID						
CHECKED BY:										
APPROVED BY:		0	9/9/2022	ISSUED FOR PERMIT	MN	KH	SD			
CDOT/APPROVED BY:		NO.	DATE	REVISIONS	DES.	DRW.	CHK.	DCCO	CDOT	

TRANSYSTEMS
222 SOUTH RIVERSIDE PLAZA SUITE 610
CHICAGO, ILLINOIS 60606

SKIDMORE, OWINGS & MERRILL LLP
224 SOUTH MICHIGAN AVENUE, SUITE 1000
CHICAGO, ILLINOIS 60604

CHICAGO DEPARTMENT OF TRANSPORTATION
DIVISION OF ENGINEERING

STATE / LAKE LOOP ELEVATED STATION
200 NORTH STATE STREET, CHICAGO, IL 60601

SPEC. NO.

CAK

DRAWING NO.
A-711

CDOT PROJECT D-1-209

DATE: 9/9/2022

REVISION NO.

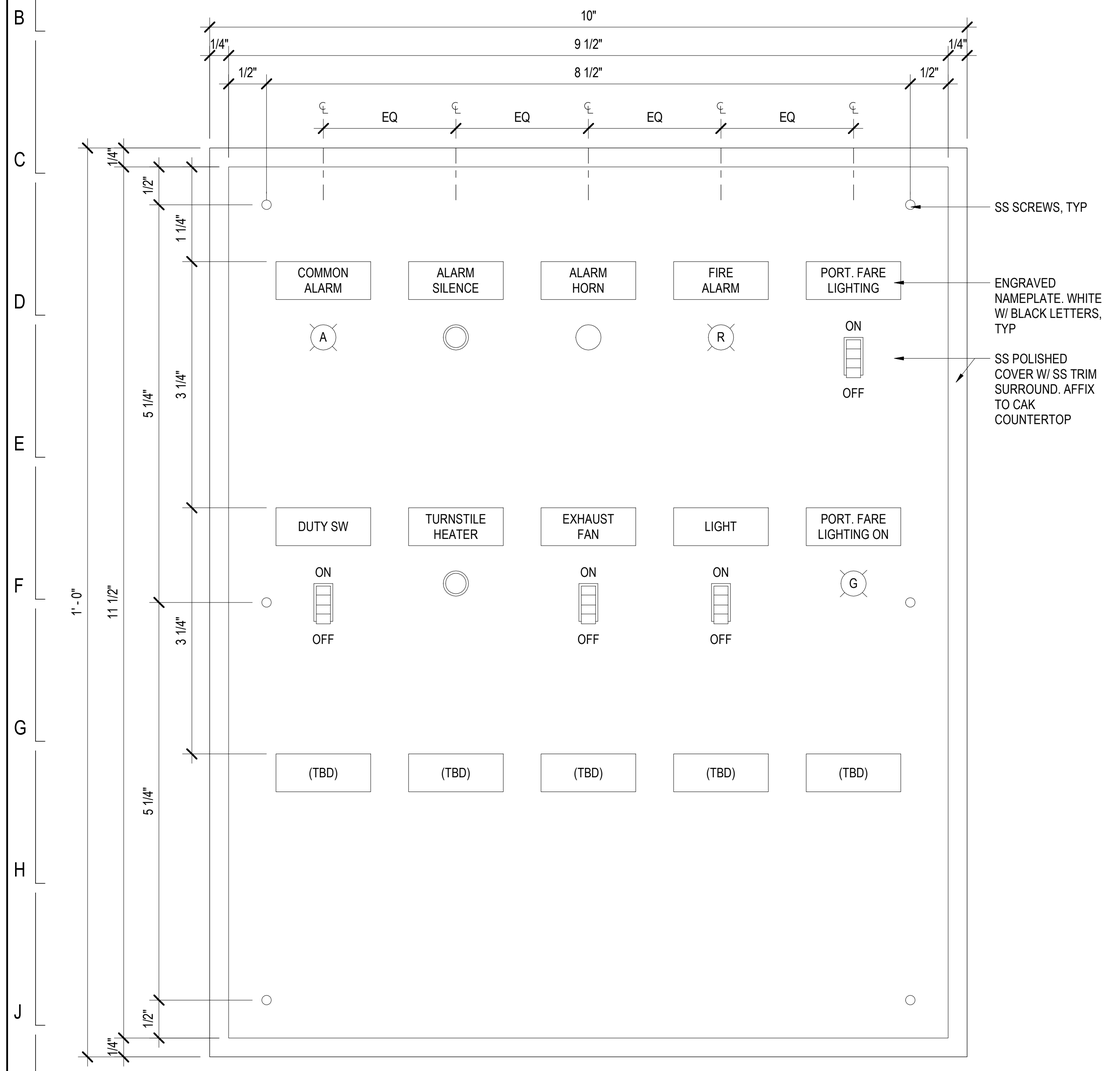

7 CAK - ALARM PANEL
12" = 1'-0"

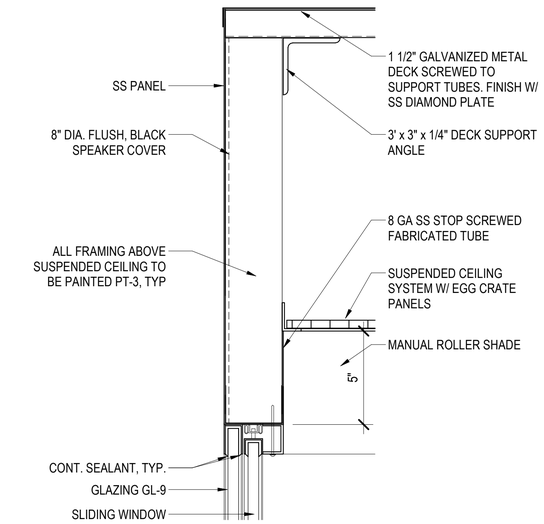

6 SECTION DETAIL

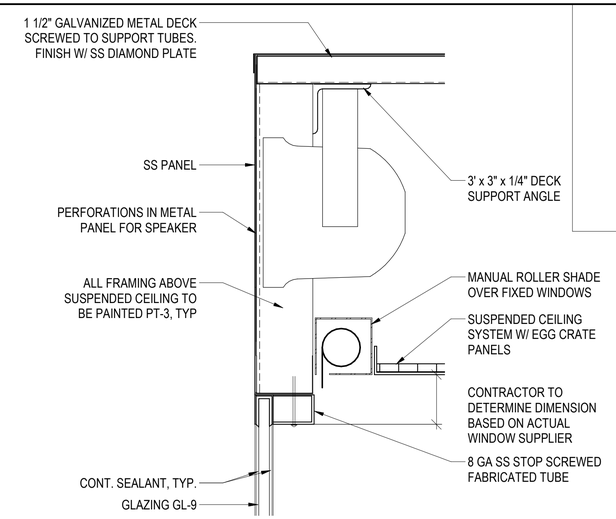

5 SECTION DETAIL
3" = 1'-0"

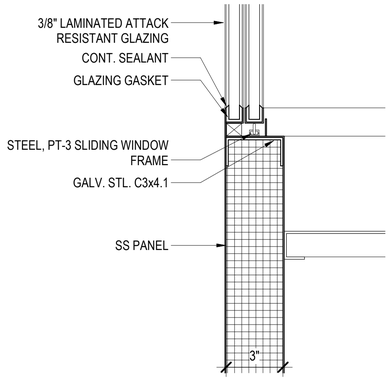

4 SECTION DETAIL
3" = 1'-0"

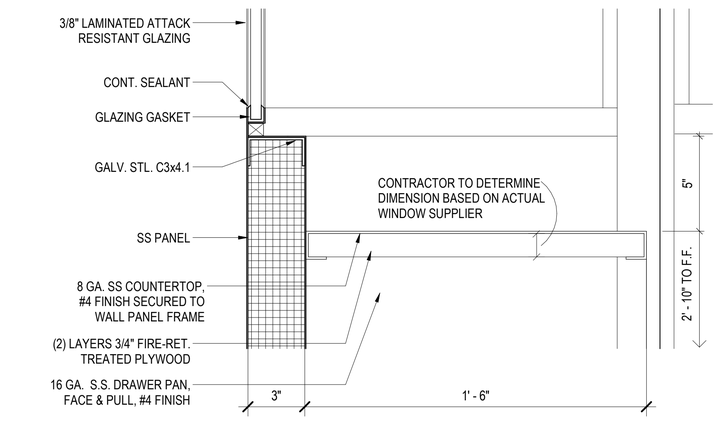

3 SECTION DETAIL
3" = 1'-0"

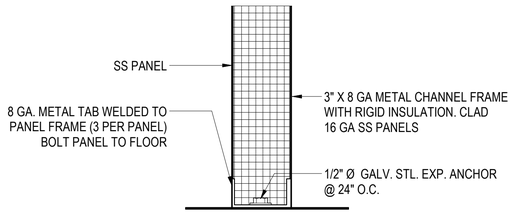

2 SECTION DETAIL
3" = 1'-0"

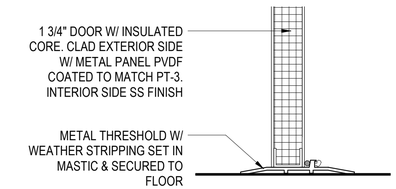

1 SECTION DETAIL
3" = 1'-0"

DESIGN BY:										
DRAWN BY:		4	7/3/2023	ISSUED FOR BID						
CHECKED BY:										
APPROVED BY:		0	9/9/2022	ISSUED FOR PERMIT	MN	KH	SD			
CDOT/APPROVED BY:		NO.	DATE	REVISIONS	DES.	DRW.	CHK.	DCCO	CDOT	

TRANSYSTEMS
222 SOUTH RIVERSIDE PLAZA SUITE 610
CHICAGO, ILLINOIS 60606

SKIDMORE, OWINGS & MERRILL LLP
224 SOUTH MICHIGAN AVENUE, SUITE 1000
CHICAGO, ILLINOIS 60604

CHICAGO DEPARTMENT OF TRANSPORTATION
DIVISION OF ENGINEERING

STATE / LAKE LOOP ELEVATED STATION
200 NORTH STATE STREET, CHICAGO, IL 60601

CAK DETAILS

CDOT PROJECT D-1-209 | DATE: 9/9/2022

SPEC. NO.

DRAWING NO. A-712

REVISION NO.

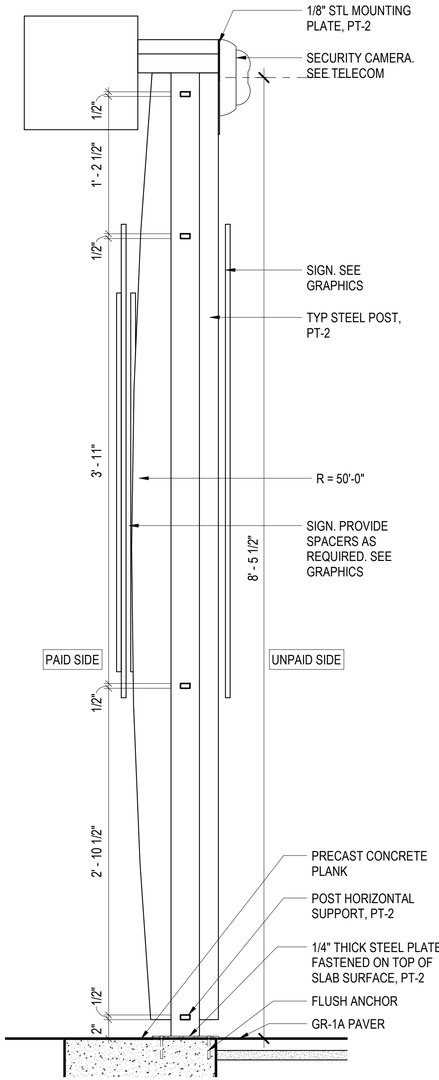

5 ELEVATION
1 1/2" = 1'-0"

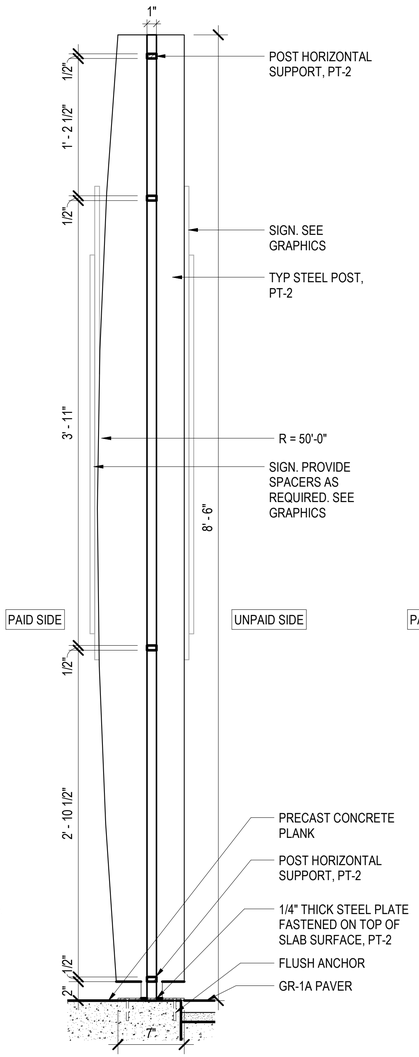

4 ELEVATION
1 1/2" = 1'-0"

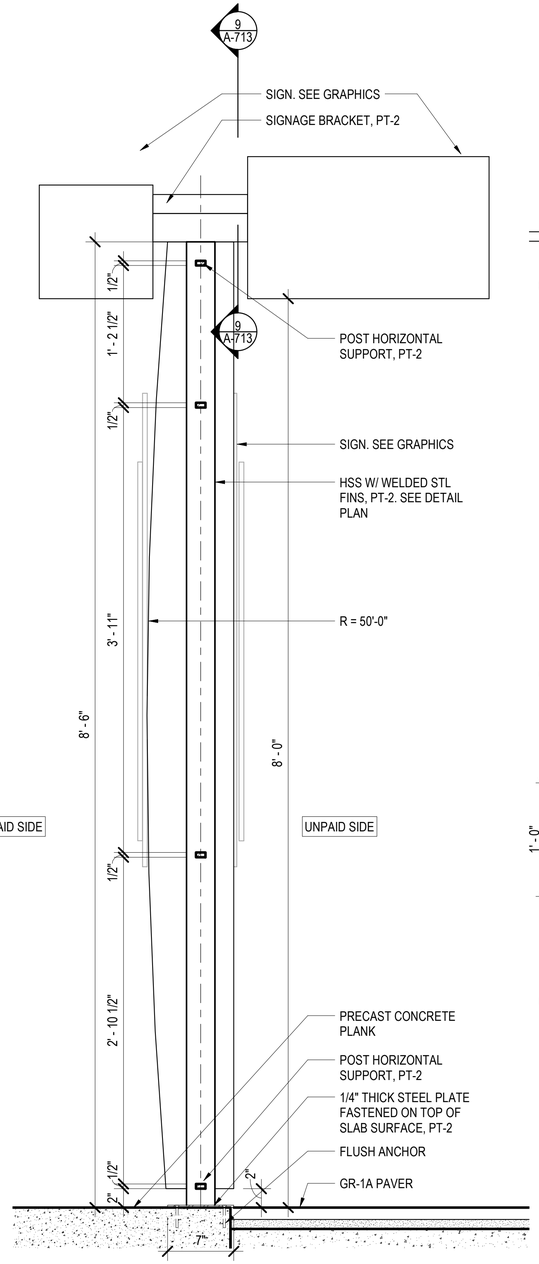

3 ELEVATION
1 1/2" = 1'-0"

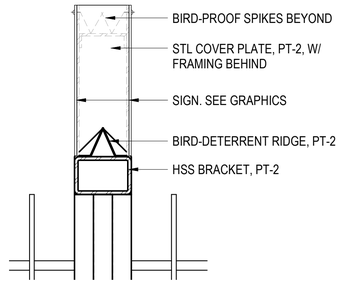

9 SECTION DETAIL
3" = 1'-0"

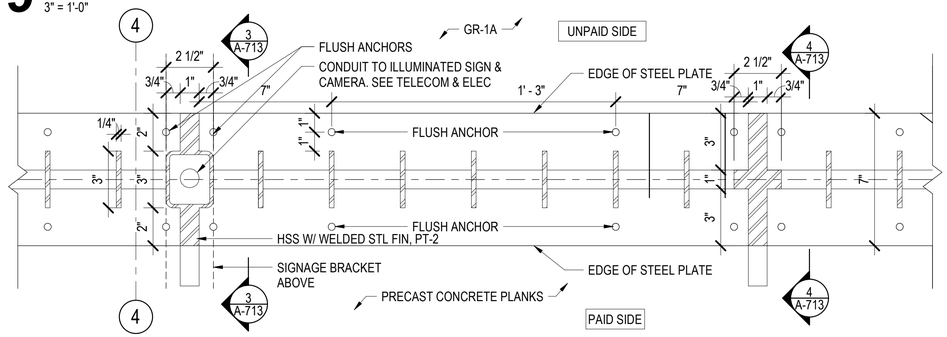

8 PLAN - POST W/CONDUIT AND TYP POST
3" = 1'-0"

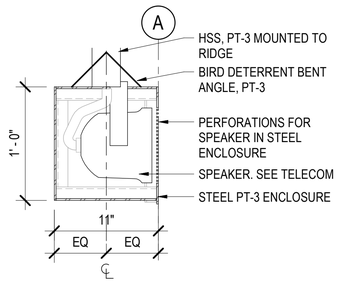

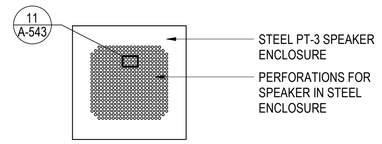

7 SECTION - SPEAKER AT SIGN
1 1/2" = 1'-0"

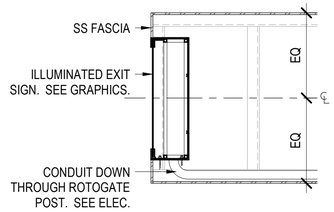

6 ELEVATION - SPEAKER AT SIGN
1 1/2" = 1'-0"

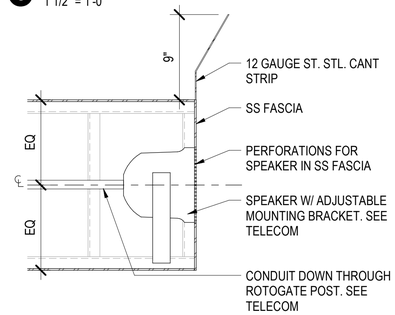

2 SECTION - ROTOGATE EXIT SIGN
1 1/2" = 1'-0"

1 SECTION - ROTOGATE
1 1/2" = 1'-0"

DESIGN BY:									
DRAWN BY:		4	7/3/2023	ISSUED FOR BID					
CHECKED BY:									
APPROVED BY:		0	9/9/2022	ISSUED FOR PERMIT	MN	KH	SD		
CDOT/APPROVED BY:		NO.	DATE	REVISIONS	DES.	DRW.	CHK.	DCCO	CDOT

TRANSYSTEMS
222 SOUTH RIVERSIDE PLAZA SUITE 610
CHICAGO, ILLINOIS 60606

SKIDMORE, OWINGS & MERRILL LLP
224 SOUTH MICHIGAN AVENUE, SUITE 1000
CHICAGO, ILLINOIS 60604

CHICAGO DEPARTMENT OF TRANSPORTATION
DIVISION OF ENGINEERING

STATE / LAKE LOOP ELEVATED STATION
200 NORTH STATE STREET, CHICAGO, IL 60601

SPEC. NO.

HIGH BARRIER GATE, ROTOGATE

DRAWING NO.
A-713

CDOT PROJECT D-1-209

DATE: 9/9/2022

REVISION NO.

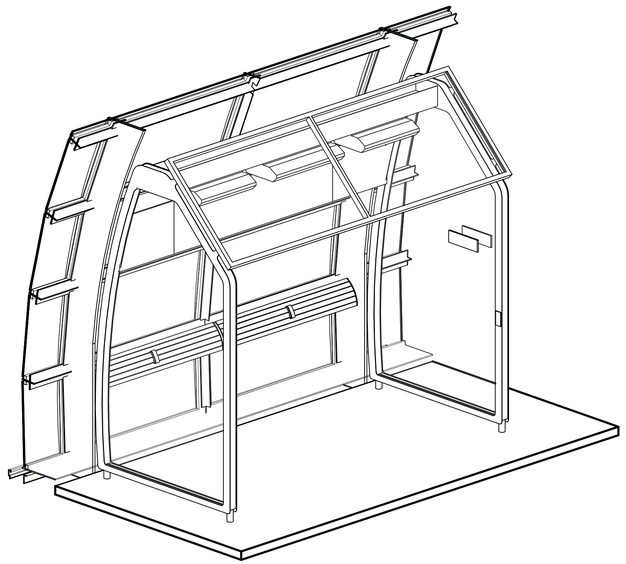

10 PERSPECTIVE

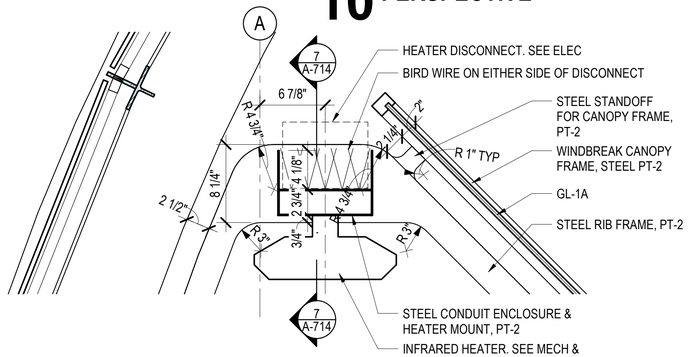

9 SECTION DETAIL
1 1/2" = 1'-0"

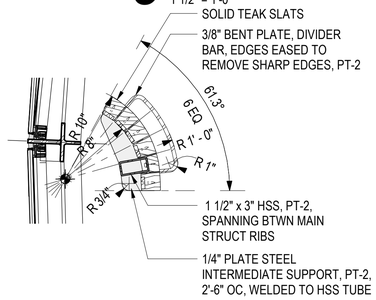

8 SECTION DETAIL
1 1/2" = 1'-0"

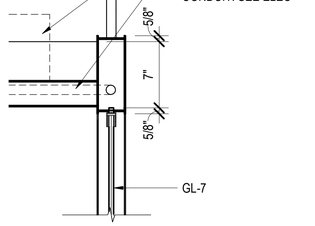

7 SECTION - WINDBREAK TOP
1 1/2" = 1'-0"

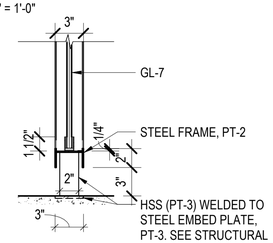

6 SECTION - WINDBREAK BASE
1 1/2" = 1'-0"

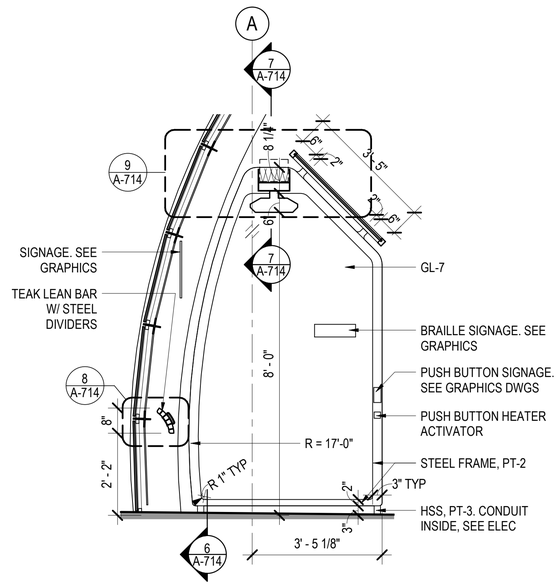

3 SECTION - WINDBREAK END
1/2" = 1'-0"

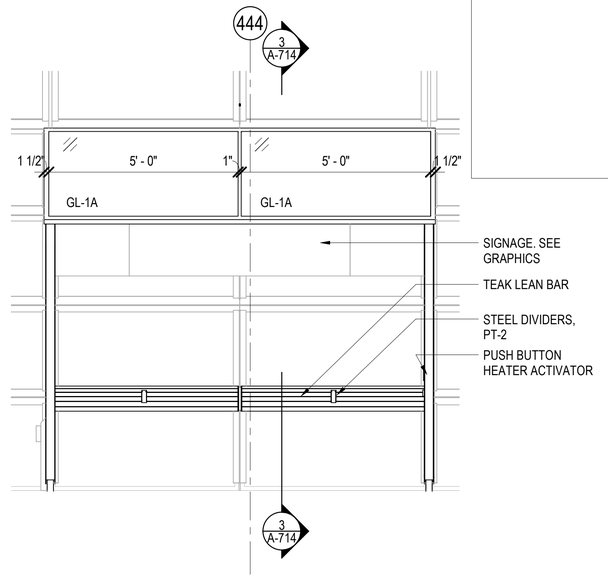

2 ELEVATION - WINDBREAK
1/2" = 1'-0"

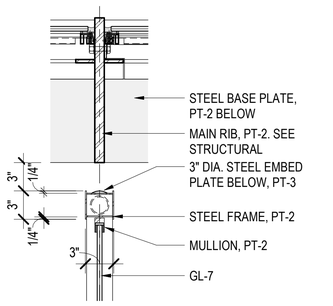

5 PLAN DETAIL
1 1/2" = 1'-0"

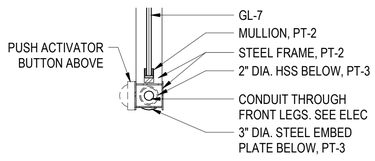

4 PLAN DETAIL
1 1/2" = 1'-0"

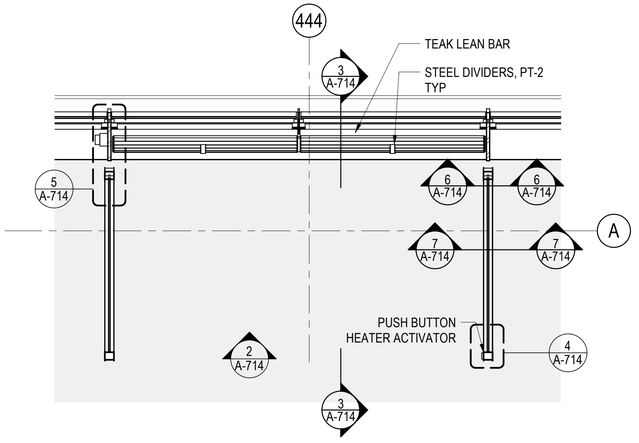

1 ENLARGED PLAN - WINDBREAK
1/2" = 1'-0"

DESIGN BY:										
DRAWN BY:		4	7/3/2023	ISSUED FOR BID						
CHECKED BY:										
APPROVED BY:		0	9/9/2022	ISSUED FOR PERMIT	MN	KH	SD			
CDOT/APPROVED BY:		NO.	DATE	REVISIONS	DES.	DRW.	CHK.	DCCO	CDOT	

TRANSYSTEMS
222 SOUTH RIVERSIDE PLAZA SUITE 610
CHICAGO, ILLINOIS 60606

SKIDMORE, OWINGS & MERRILL LLP
224 SOUTH MICHIGAN AVENUE, SUITE 1000
CHICAGO, ILLINOIS 60604

CHICAGO DEPARTMENT OF TRANSPORTATION
DIVISION OF ENGINEERING

STATE / LAKE LOOP ELEVATED STATION
200 NORTH STATE STREET, CHICAGO, IL 60601

WINDBREAK ENLARGED PLANS, ELEVATIONS & SECTIONS

CDOT PROJECT D-1-209 | DATE: 9/9/2022

SPEC. NO.

DRAWING NO. A-714

REVISION NO.

NOTE:
ALL BENCH STEEL ELEMENTS TO BE AESS 3

ALL FASTENERS TO BE FULLY CONCEALED

TEAK SLATS SHALL BE REMOVABLE FOR REPLACEMENT

6 PERSPECTIVE

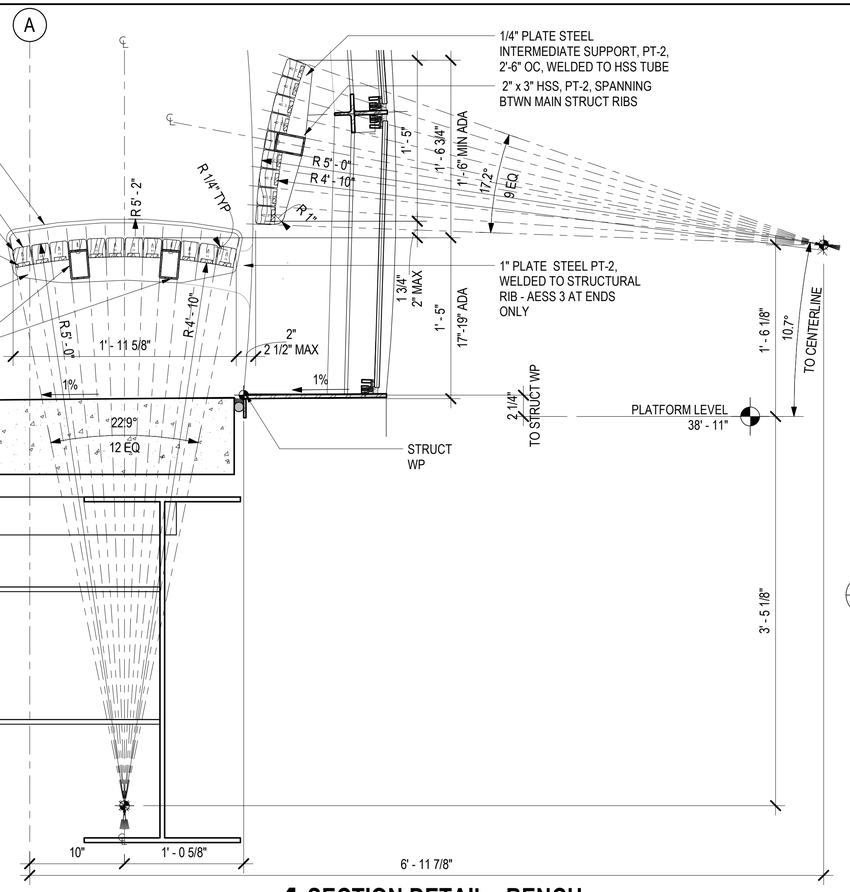

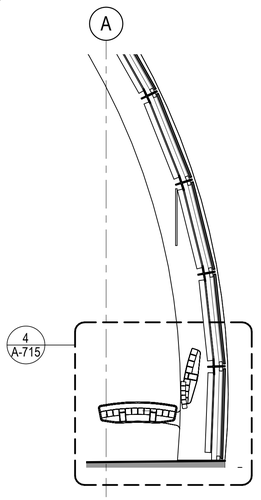

3 SECTION - BENCH
1/2" = 1'-0"

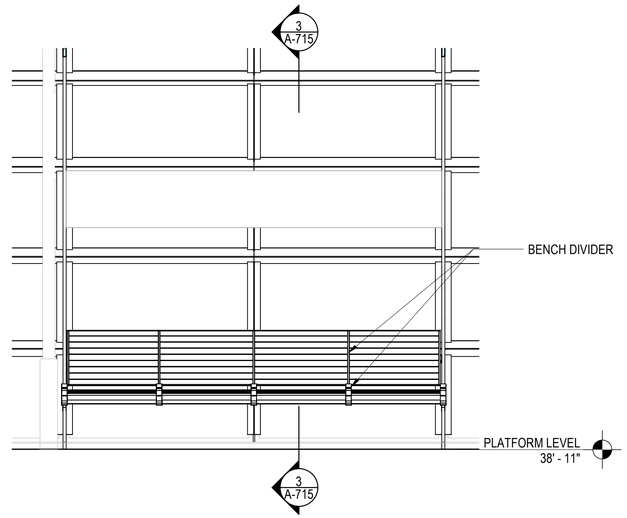

2 ELEVATION - BENCH
1/2" = 1'-0"

4 SECTION DETAIL - BENCH
1 1/2" = 1'-0"

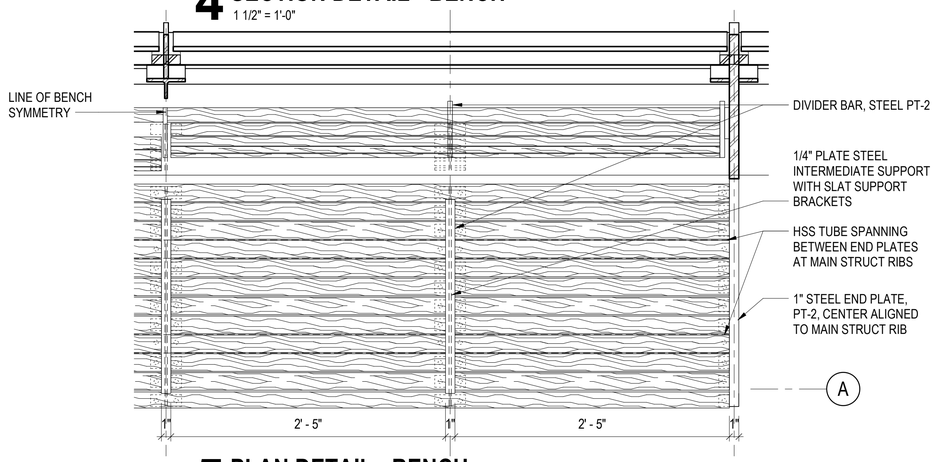

5 PLAN DETAIL - BENCH
1 1/2" = 1'-0"

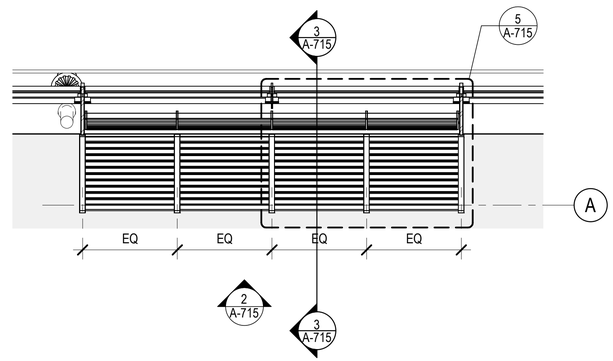

1 ENLARGED PLAN - TYPICAL BENCH
1/2" = 1'-0"

DESIGN BY:										
DRAWN BY:		4	7/3/2023	ISSUED FOR BID						
CHECKED BY:										
APPROVED BY:		0	9/9/2022	ISSUED FOR PERMIT	MN	KH	SD			
CDOT/APPROVED BY:		NO.	DATE	REVISIONS	DES.	DRW.	CHK.	DCCO	CDOT	

TRANSYSTEMS
222 SOUTH RIVERSIDE PLAZA SUITE 610
CHICAGO, ILLINOIS 60606

SKIDMORE, OWINGS & MERRILL LLP
224 SOUTH MICHIGAN AVENUE, SUITE 1000
CHICAGO, ILLINOIS 60604

CHICAGO DEPARTMENT OF TRANSPORTATION
DIVISION OF ENGINEERING

STATE / LAKE LOOP ELEVATED STATION
200 NORTH STATE STREET, CHICAGO, IL 60601

BENCH ENLARGED PLAN, ELEVATION, SECTION & DETAILS

CDOT PROJECT D-1-209 | DATE: 9/9/2022

SPEC. NO.

DRAWING NO. A-715

REVISION NO.

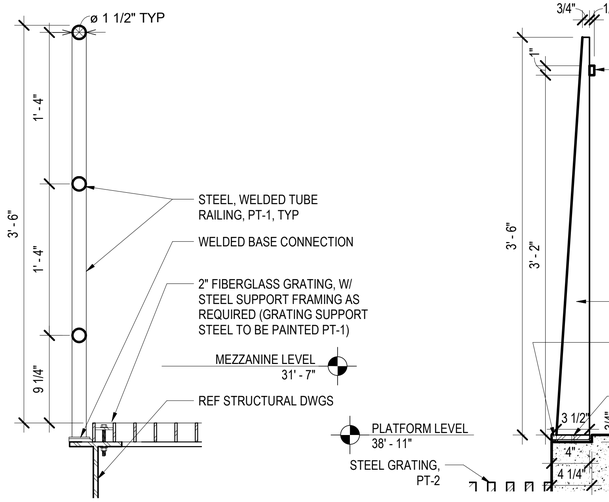

10 SECTION - RAILING AT ELEC RM
1 1/2" = 1'-0"

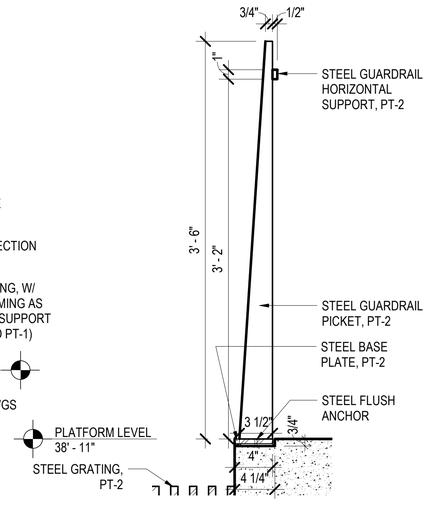

9 SECTION DETAIL
1 1/2" = 1'-0"

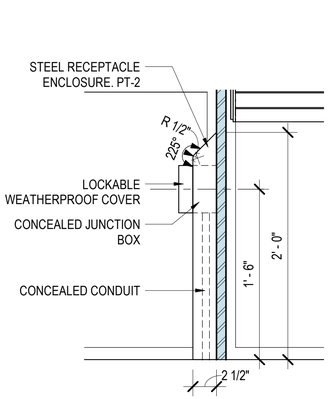

8 ELEVATION - TYP RECEPTACLE
1 1/2" = 1'-0"

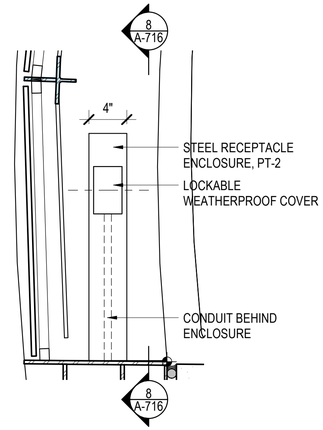

7 ELEVATION - TYP RECEPTACLE
1 1/2" = 1'-0"

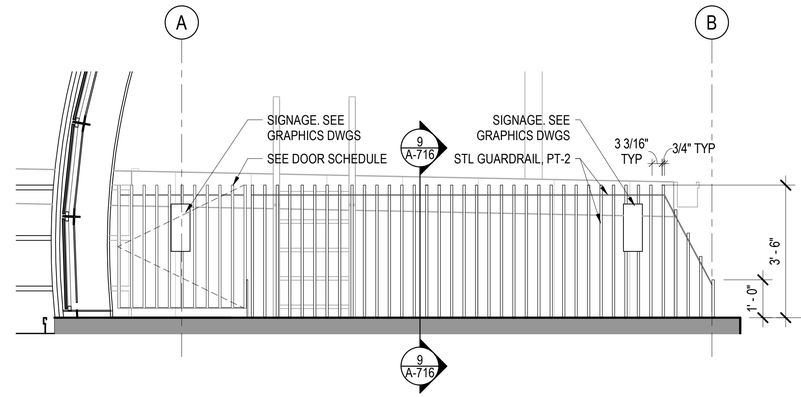

6 ELEVATION - PLATFORM END GUARDRAIL
1/2" = 1'-0"

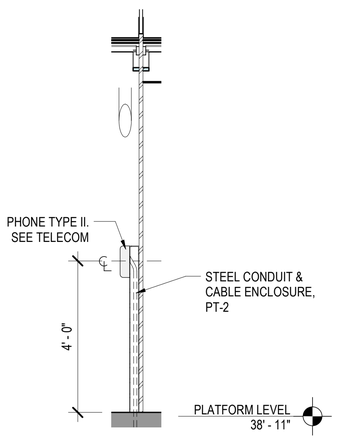

5 SECTION - CTA PHONE
1/2" = 1'-0"

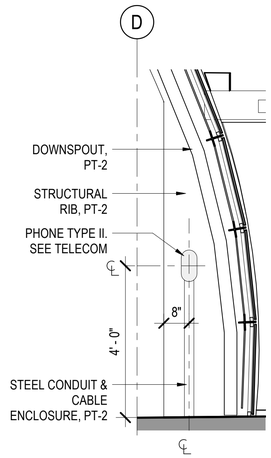

4 ELEVATION - CTA PHONE
1/2" = 1'-0"

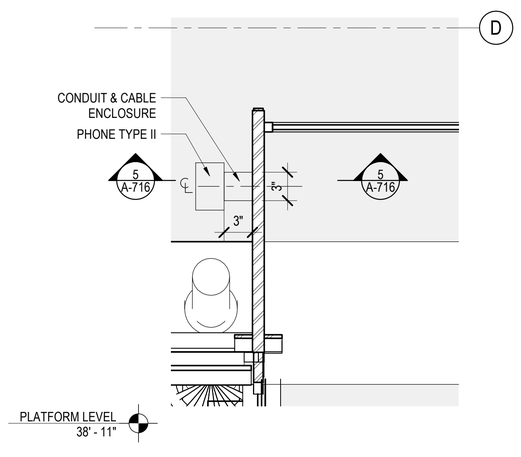

3 ENLARGED PLAN - CTA PHONE
1 1/2" = 1'-0"

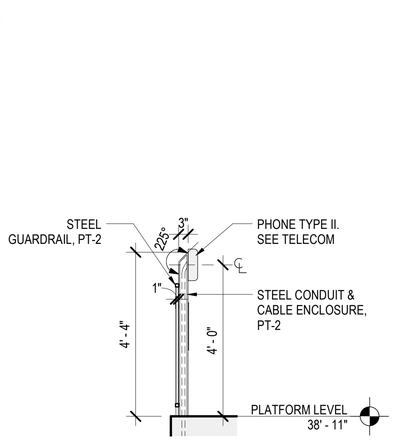

2 SECTION - PLATFORM END W/ CTA PHONE
1/2" = 1'-0"

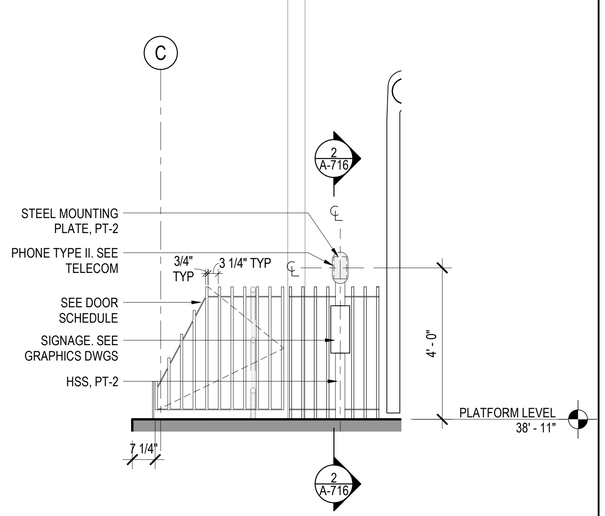

1 ELEVATION - PLATFORM END GUARDRAIL
1/2" = 1'-0"

DESIGN BY:										
DRAWN BY:		4	7/3/2023	ISSUED FOR BID						
CHECKED BY:										
APPROVED BY:		0	9/9/2022	ISSUED FOR PERMIT	MN	KH	SD			
CDOT/APPROVED BY:		NO.	DATE	REVISIONS	DES.	DRW.	CHK.	DCCO	CDOT	

TRANSYSTEMS
222 SOUTH RIVERSIDE PLAZA SUITE 610
CHICAGO, ILLINOIS 60606

SKIDMORE, OWINGS & MERRILL LLP
224 SOUTH MICHIGAN AVENUE, SUITE 1000
CHICAGO, ILLINOIS 60604

CHICAGO DEPARTMENT OF TRANSPORTATION
DIVISION OF ENGINEERING

STATE / LAKE LOOP ELEVATED STATION
200 NORTH STATE STREET, CHICAGO, IL 60601

SPEC. NO.

PLATFORM GUARDRAILS, PHONES & RECEPTACLES

DRAWING NO. A-716

CDOT PROJECT D-1-209 | DATE: 9/9/2022 | REVISION NO.

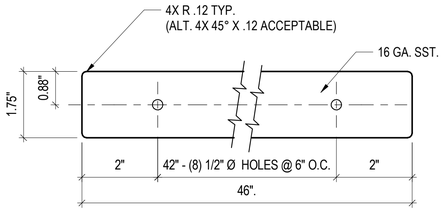

14 DETAIL - BACKING STRIP
6" = 1'-0"

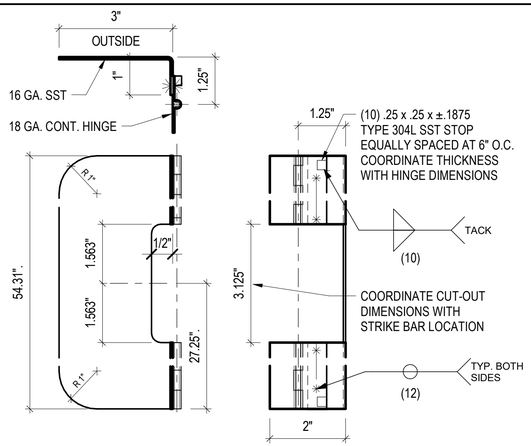

13 DETAIL - INNER DOOR ASSEMBLY
6" = 1'-0"

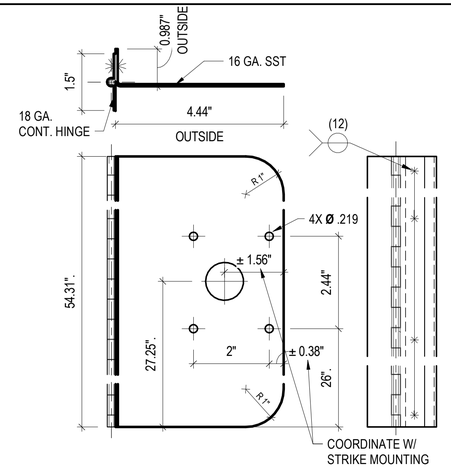

12 DETAIL - OUTER DOOR ASSEMBLY
6" = 1'-0"

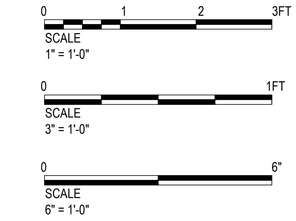

NOTES:
1. REFER TO PLATFORM LEVEL PLANS FOR ENCLOSURE LOCATIONS.
2. ALL SPOT WELDING TO BE PERFORMED PER A.W.S. SPECIFICATION FOR RESISTANCE WELDING C1.1 LATEST.
3. ALTERNATE GAS TUNGSTEN ARC WELDING PER A.W.S. SPEC. B2.1.009, OR GAS METAL ARC WELDING PER A.W.S. SPEC. D9.1 IS ACCEPTABLE.
4. UNLESS OTHERWISE SPECIFIED:
   - DIMENSIONS ARE IN INCHES.
   - TOLERANCES:
     ANGLES: ±2°
     DECIMALS: .XX ±.03; .XXX ±.010
     BEND RADII: .01 ON .03 & .06; ±.03 ON .09 & GREATER
     SHEET METAL CORNER RADII:
     INT .19 EXT .25
     .16 .00

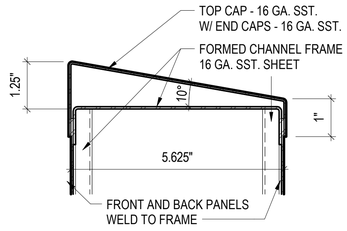

11 DETAIL - CAP
6" = 1'-0"

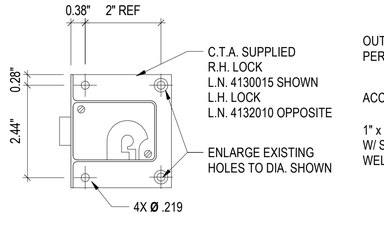

10 DETAIL ELEVATION
6" = 1'-0"

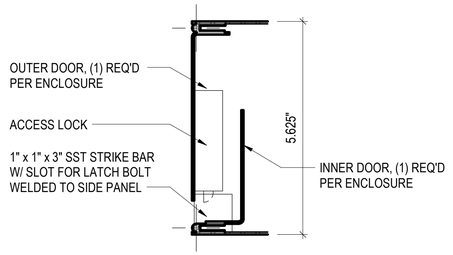

9 DETAIL PLAN
6" = 1'-0"

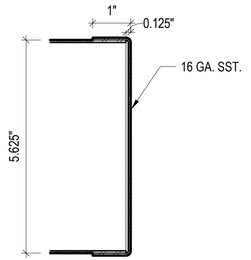

8 DETAIL PLAN
6" = 1'-0"

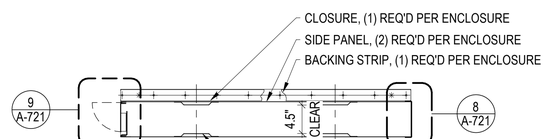

7 PLAN
1" = 1'-0"

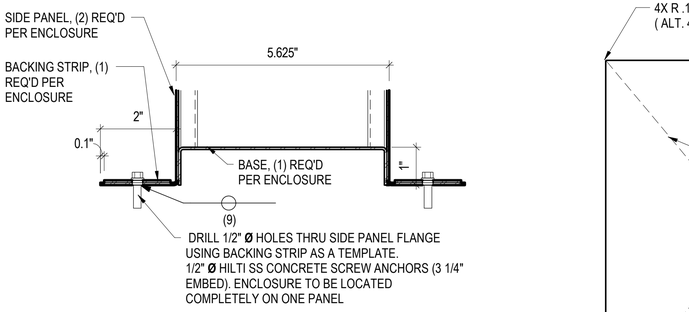

6 DETAIL - BASE
6" = 1'-0"

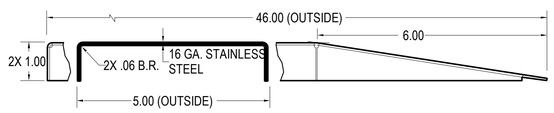

5 DETAIL - BASE
6" = 1'-0"

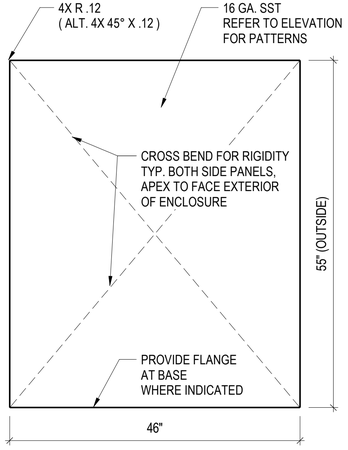

4 SIDE PANEL ELEVATION
1" = 1'-0"

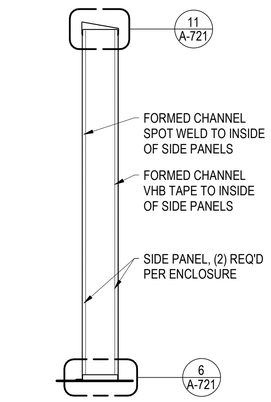

3 SECTION
1" = 1'-0"

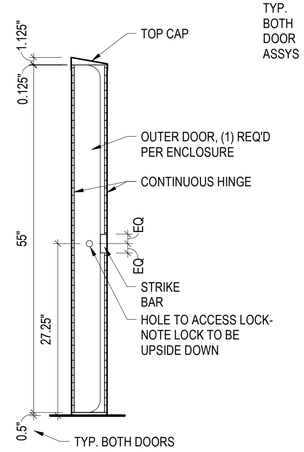

2 SIDE ELEVATION
1" = 1'-0"

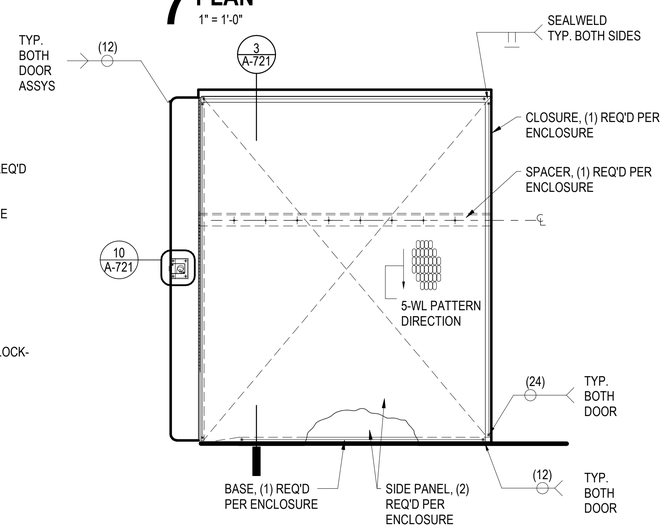

1 ELEVATION
1" = 1'-0"

DESIGN BY:										
DRAWN BY:		4	7/3/2023	ISSUED FOR BID						
CHECKED BY:										
APPROVED BY:		0	9/9/2022	ISSUED FOR PERMIT	MN	KH	SD			
CDOT/APPROVED BY:		NO.	DATE	REVISIONS	DES.	DRW.	CHK.	DCCO	CDOT	

TRANSYSTEMS
222 SOUTH RIVERSIDE PLAZA SUITE 610
CHICAGO, ILLINOIS 60606

SKIDMORE, OWINGS & MERRILL LLP
224 SOUTH MICHIGAN AVENUE, SUITE 1000
CHICAGO, ILLINOIS 60604

CHICAGO DEPARTMENT
OF TRANSPORTATION
DIVISION OF ENGINEERING

STATE / LAKE LOOP ELEVATED STATION
200 NORTH STATE STREET, CHICAGO, IL 60601

SPEC. NO.

GAP FILLER ENCLOSURE

DRAWING NO.
A-721

CDOT PROJECT D-1-209

DATE: 9/9/2022

REVISION NO.

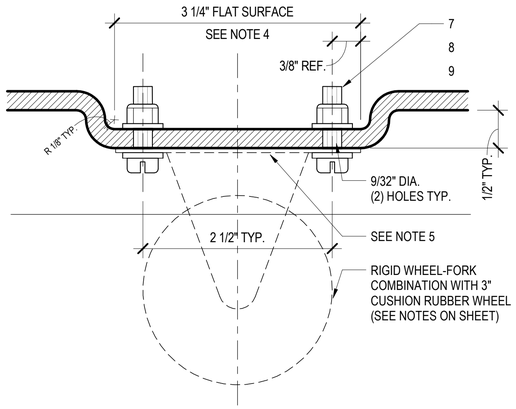

6 SECTION B-B
12" = 1'-0"

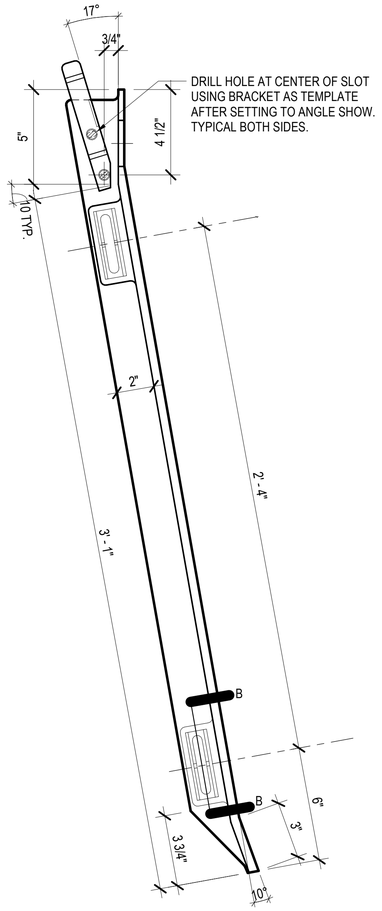

4 SIDE ELEVATION
3" = 1'-0"

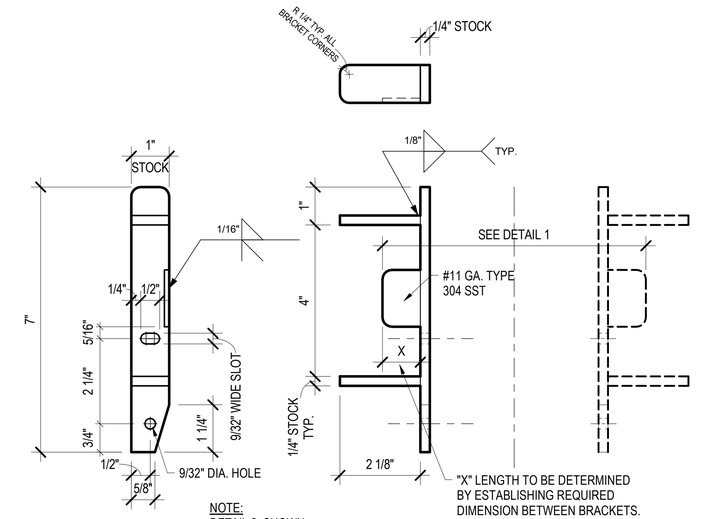

3 RETAINING BRACKETS DETAILS
6" = 1'-0"

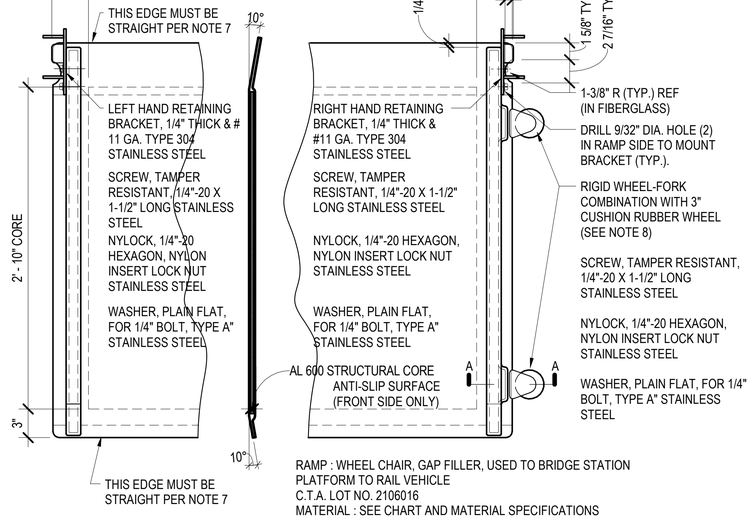

RAMP : WHEEL CHAIR, GAP FILLER, USED TO BRIDGE STATION PLATFORM TO RAIL VEHICLE
C.T.A. LOT NO. 2106016
MATERIAL : SEE CHART AND MATERIAL SPECIFICATIONS

2 PLAN
1 1/2" = 1'-0"

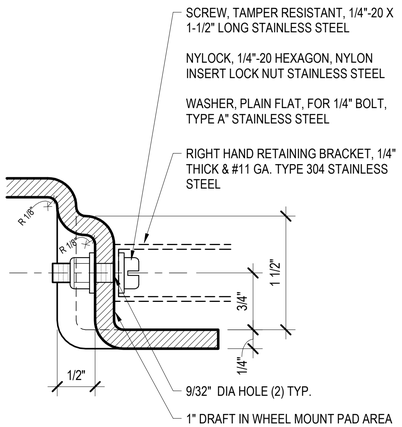

5 SECTION A-A
12" = 1'-0"

0 1 2FT
SCALE
1 1/2" = 1'-0"

0 1FT
SCALE
3" = 1'-0"

0 6"
SCALE
6" = 1'-0"

FIBERGLASS REINFORCED PLASTIC SPECIFICATIONS:
- FRP LAMINATE SKINS TO BE FABRICATED FROM CLASS 1 FIRE RETARDANT VINYLESTER RESIN AND M8610 CONTINUOUS FIBREGLASS MAT.

DESIGN SPECIFICATIONS:
- FEDERAL REGISTER VOL. 56 NO. 173.45766 CAR RAMP OR BRIDGE PLATE.
- EXTERIOR COATING TO BE ISOPHTALIC POLYESTER GEL-COAT WITH UV-9, SAFETY YELLOW COLOR.
- ASSEMBLED RAMP NOT TO EXCEED 40 lbs.
- FRP USING THE CLASS 1 FIRE RETARDANT VINYLESTER RESIN MUST MEET THE FOLLOWING FLAMMABILITY AND FLAME SPREAD CHARACTERISTICS:

PROPERTY	TEST METHOD	TEST VALUE
FLAMABILITY	ASTM E162 (RADIANT PANEL TEST) (ADDITIONAL PROVISION IS THAT THERE SHALL BE NO FLAMING DRIPPINGS)	IS - 35 MAX.
FLAME SPREAD	ASTM E84 (TUNNEL TEST)	FSI - 25 MAX

NOTES:
1. REMOVE ALL BURRS, WELD SPLATTER & SHARP EDGES FROM ALL STEEL PARTS.
2. ALL WELDS TO COMPLY WITH LATEST A.W.S. STANDARDS FOR STAINLESS WELDING.
3. 3° DRAFT ANGLE PERMISSABLE FOR MOLD REMOVAL EXCEPT WHERE NOTED.
4. WASHERS MUST SIT FLUSH ON INNER SURFACE.
5. WHEEL MOUNTING SURFACE MUST BE FLAT AND LEVEL.
6. COLSON SERIES 1 WHEEL/FORK COMBO CATALOG NO. 1-2210-1-3-43 AVAILABLE FROM: INDUSTRIAL WHEEL & TOOL CO. 6912 W. ROOSEVELT ROAD OAK PARK, IL 60304 (708) 848-9340
7. WHEN PLACED ON FLAT SURFACE, MAX. 1/8" GAP (BOWING) PERMISSABLE EITHER END OF LAMINATE.
8. ALL LAMINATED SURFACES MUST BE SMOOTH AND ABRASION FREE, CAUSING NO INJURY TO UNPROTECTED HANDS OR PERSONNEL'S CLOTHING.

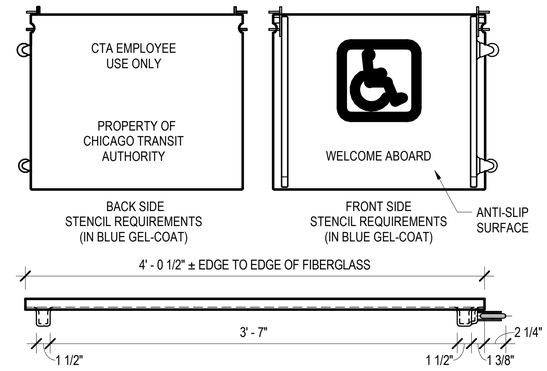

1 ELEVATION
1 1/2" = 1'-0"

DESIGN BY:										
DRAWN BY:		4	7/3/2023	ISSUED FOR BID						
CHECKED BY:										
APPROVED BY:		0	9/9/2022	ISSUED FOR PERMIT	MN	KH	SD			
CDOT/APPROVED BY:		NO.	DATE	REVISIONS	DES.	DRW.	CHK.	DCCO	CDOT	

TRANSYSTEMS
222 SOUTH RIVERSIDE PLAZA SUITE 610
CHICAGO, ILLINOIS 60606

SKIDMORE, OWINGS & MERRILL LLP
224 SOUTH MICHIGAN AVENUE, SUITE 1000
CHICAGO, ILLINOIS 60604

CHICAGO DEPARTMENT OF TRANSPORTATION
DIVISION OF ENGINEERING

STATE / LAKE LOOP ELEVATED STATION
200 NORTH STATE STREET, CHICAGO, IL 60601

SPEC. NO.

GAP FILLER DEVICE

DRAWING NO.
A-722

CDOT PROJECT D-1-209

DATE: 9/9/2022

REVISION NO.

SCALE
3/4" = 1'-0"

SCALE
1 1/2" = 1'-0"

SCALE
6" = 1'-0"

NOTES:
1. REFER TO PLATFORM LEVEL PLANS FOR SANDBOX LOCATIONS.
2. SANDBOXES SHALL HAVE A CAPACITY OF 1 CUBIC YARD OF SAND.
3. FABRICATE THE SANDBOX TO PROVIDE A RIGID ONE PIECE CONSTRUCTION, INCLUDING THE FIXED PORTION OF THE LID.
4. ALL EXPOSED STAINLESS STEEL TO HAVE 5WL FINISH.
5. ENCLOSURE, LID AND FRAME TO BE FULLY WELDED.
6. HARDWARE REQUIREMENTS:
7. HASP & STAPLE: HEAVY DUTY - 6" STAINLESS STEEL.
8. CONTINUOUS HINGE: STAINLESS STEEL WITH SCREW HOLES 6" O.C.
9. LID SUPPORTS: HEAVY DUTY - STEEL WITH ZINC FINISH.
10. ALL FASTENERS TO BE STAINLESS STEEL.

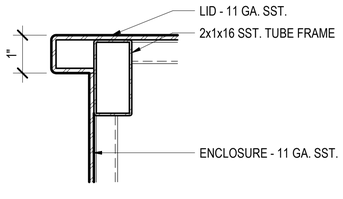

9 DETAIL - LID REAR
6" = 1'-0"

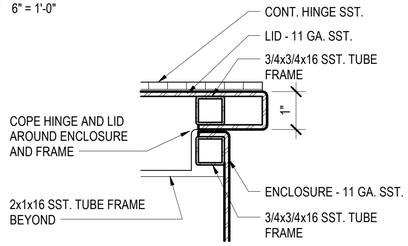

8 DETAIL - HINGE
6" = 1'-0"

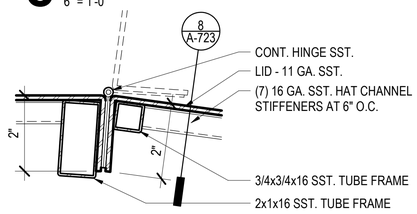

7 DETAIL - HINGE
6" = 1'-0"

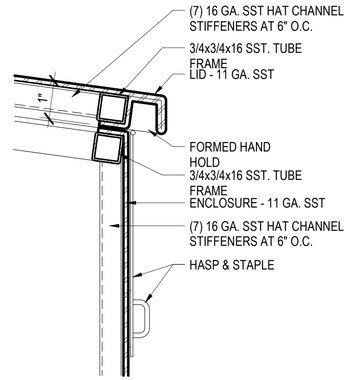

6 DETAIL - LID FRONT
6" = 1'-0"

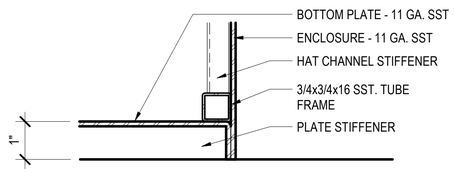

5 DETAIL - BASE
6" = 1'-0"

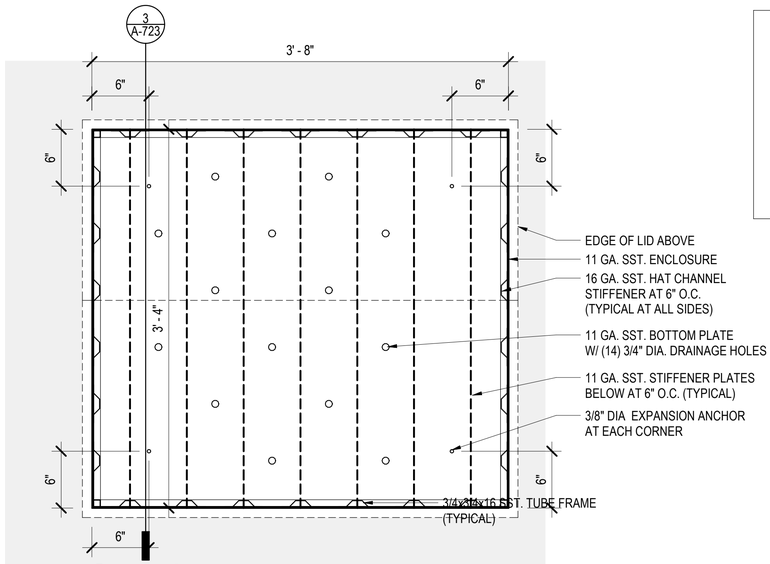

4 DETAIL PLAN
1 1/2" = 1'-0"

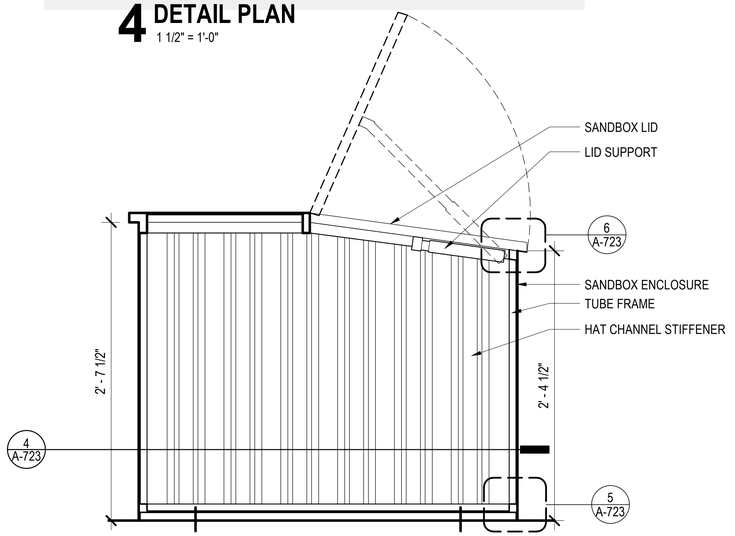

3 SANDBOX - SECTION
1 1/2" = 1'-0"

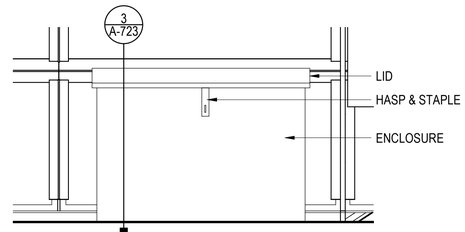

2 ELEVATION
3/4" = 1'-0"

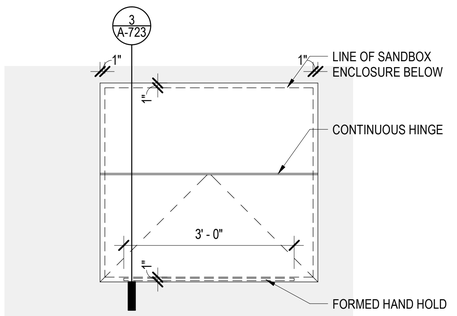

1 PLAN
3/4" = 1'-0"

DESIGN BY:										
DRAWN BY:		4	7/3/2023	ISSUED FOR BID						
CHECKED BY:										
APPROVED BY:		0	9/9/2022	ISSUED FOR PERMIT	MN	KH	SD			
CDOT/APPROVED BY:		NO.	DATE	REVISIONS	DES.	DRW.	CHK.	DCCO	CDOT	

TranSystems
TRANSYSTEMS
222 SOUTH RIVERSIDE PLAZA SUITE 610
CHICAGO, ILLINOIS 60606

SOM
SKIDMORE, OWINGS & MERRILL LLP
224 SOUTH MICHIGAN AVENUE, SUITE 1000
CHICAGO, ILLINOIS 60604

CDOT
CHICAGO DEPARTMENT OF TRANSPORTATION
DIVISION OF ENGINEERING

STATE / LAKE LOOP ELEVATED STATION
200 NORTH STATE STREET, CHICAGO, IL 60601

SPEC. NO.

SANDBOX

DRAWING NO.
A-723

CDOT PROJECT D-1-209

DATE: 9/9/2022

REVISION NO.

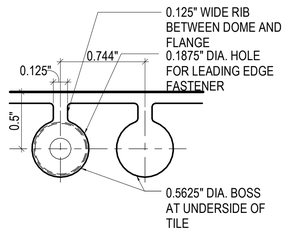

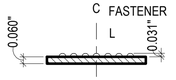

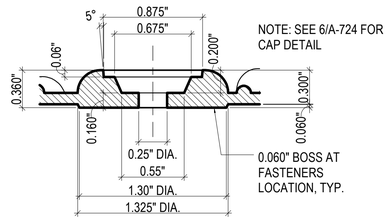

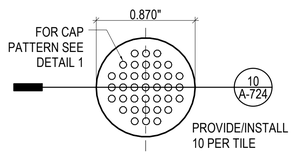

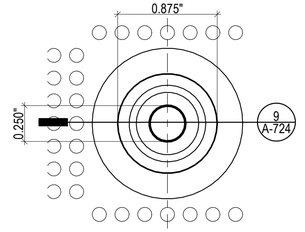

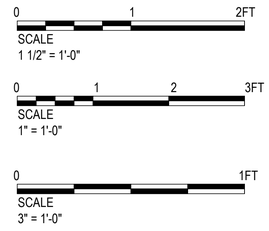

11 DETAIL - UNDERSIDE OF FASTENER
1 1/2" = 1'-0"

10 DETAIL SECTION
1 1/2" = 1'-0"

9 DETAIL SECTION
1 1/2" = 1'-0"

8 DETAIL PLAN
1 1/2" = 1'-0"

7 DETAIL PLAN
1 1/2" = 1'-0"

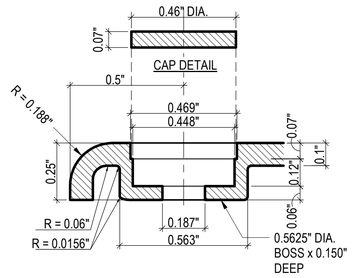

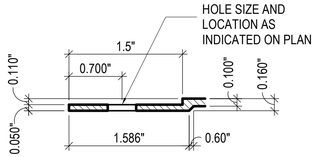

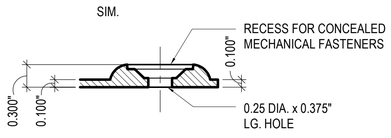

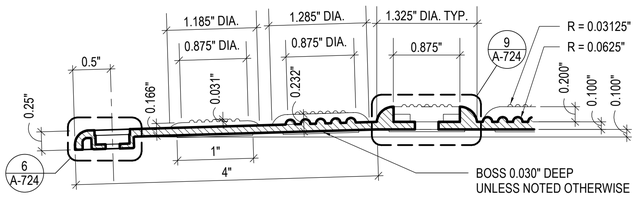

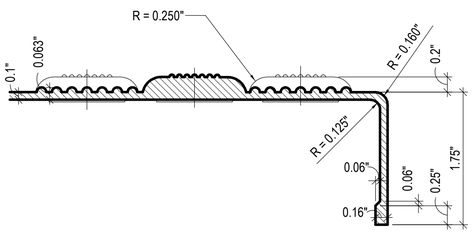

6 DETAIL SECTION
3" = 1'-0"

5 DETAIL SECTION
1" = 1'-0"

4 DETAIL SECTION
1" = 1'-0"

3 SECTION
1" = 1'-0"

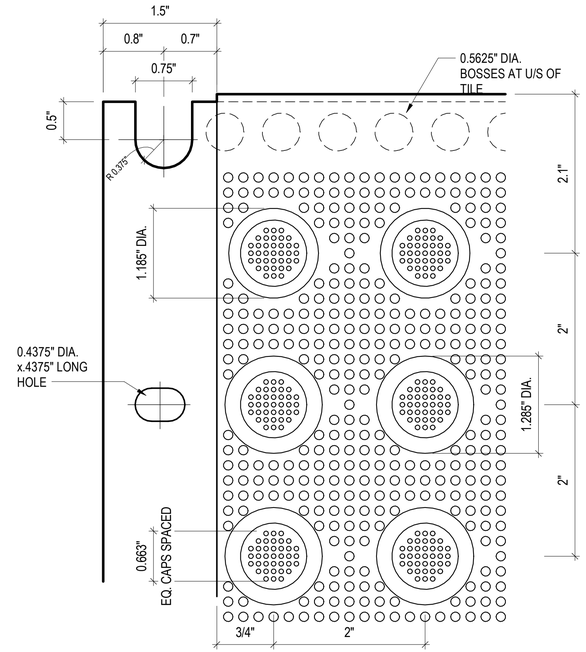

2 DETAIL PLAN
12" = 1'-0"

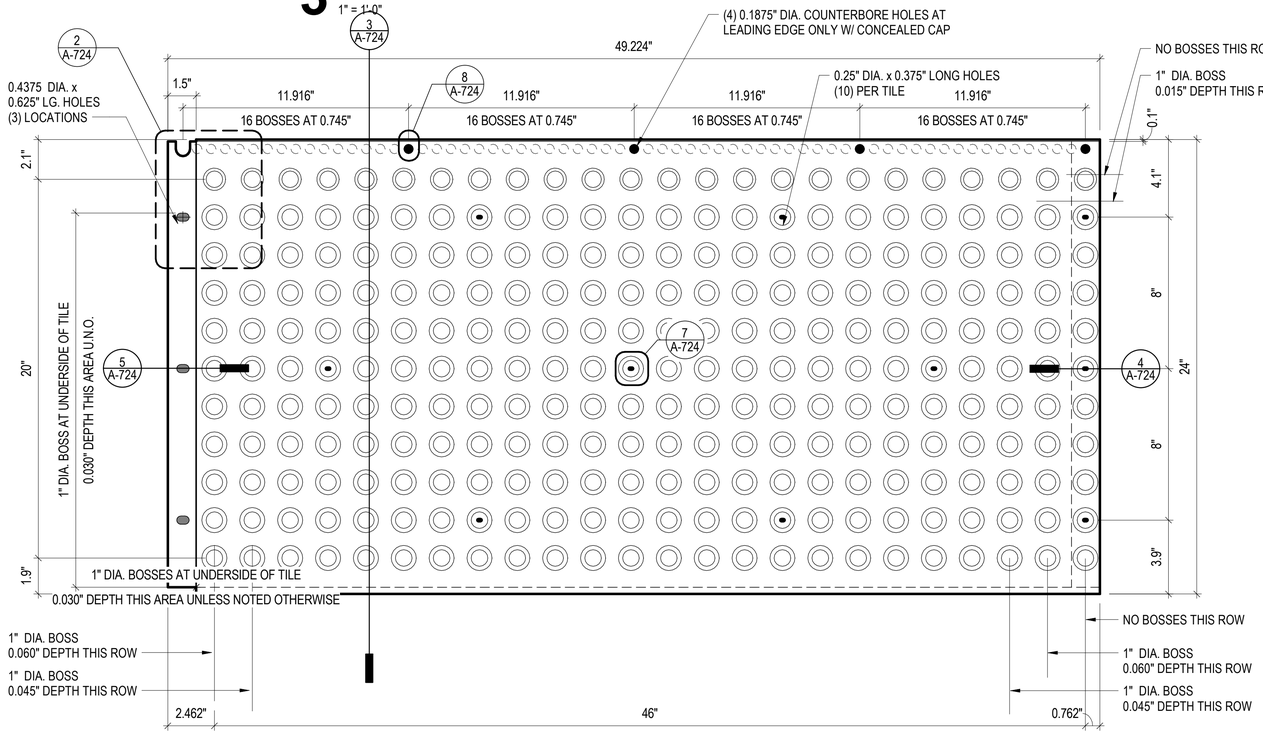

1 PLAN
3" = 1'-0"

DESIGN BY:									
DRAWN BY:		4	7/3/2023	ISSUED FOR BID					
CHECKED BY:									
APPROVED BY:		0	9/9/2022	ISSUED FOR PERMIT	MN	KH	SD		
CDOT/APPROVED BY:		NO.	DATE	REVISIONS	DES.	DRW.	CHK.	DCCO	CDOT

TRANSYSTEMS
222 SOUTH RIVERSIDE PLAZA SUITE 610
CHICAGO, ILLINOIS 60606

SKIDMORE, OWINGS & MERRILL LLP
224 SOUTH MICHIGAN AVENUE, SUITE 1000
CHICAGO, ILLINOIS 60604

CHICAGO DEPARTMENT OF TRANSPORTATION
DIVISION OF ENGINEERING

STATE / LAKE LOOP ELEVATED STATION
200 NORTH STATE STREET, CHICAGO, IL 60601

SPEC. NO.

TACTILE PANEL AT EDGE

DRAWING NO. A-724

CDOT PROJECT D-1-209 | DATE: 9/9/2022 | REVISION NO.

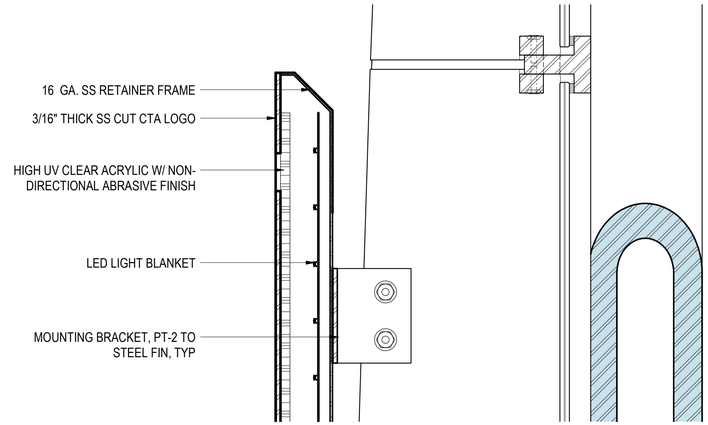

3 SECTION DETAIL
3" = 1'-0"

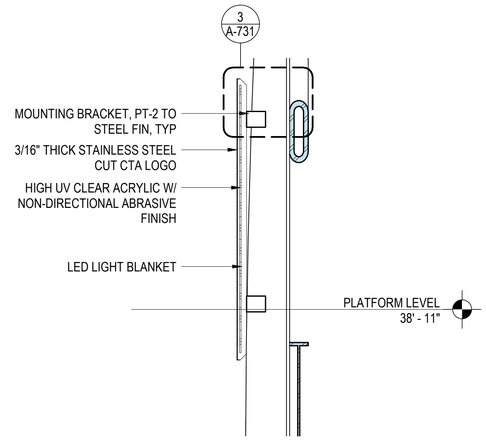

2 SECTION
1/2" = 1'-0"

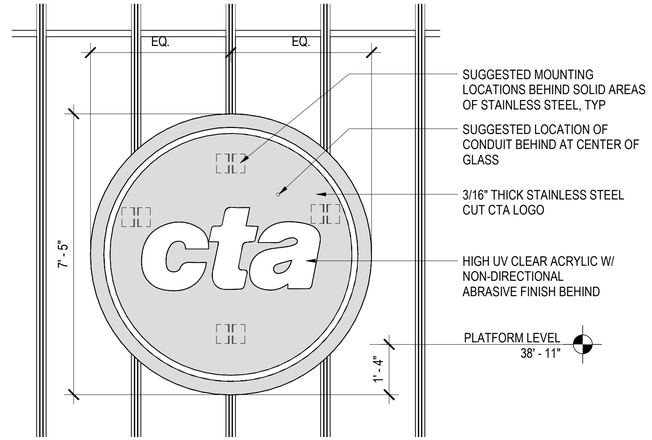

1 ELEVATION
1/2" = 1'-0"

DESIGN BY:									
DRAWN BY:		4	7/3/2023	ISSUED FOR BID					
CHECKED BY:									
APPROVED BY:		0	9/9/2022	ISSUED FOR PERMIT	MN	KH	SD		
CDOT/APPROVED BY:		NO.	DATE	REVISIONS	DES.	DRW.	CHK.	DCCO	CDOT

TRANSYSTEMS
222 SOUTH RIVERSIDE PLAZA SUITE 610
CHICAGO, ILLINOIS 60606

SKIDMORE, OWINGS & MERRILL LLP
224 SOUTH MICHIGAN AVENUE, SUITE 1000
CHICAGO, ILLINOIS 60604

CHICAGO DEPARTMENT OF TRANSPORTATION
DIVISION OF ENGINEERING

STATE / LAKE LOOP ELEVATED STATION
200 NORTH STATE STREET, CHICAGO, IL 60601

SPEC. NO.

CTA LOGO SIGN

DRAWING NO.
A-731

CDOT PROJECT D-1-209

DATE: 9/9/2022

REVISION NO.

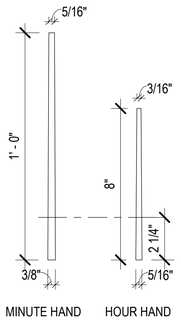

10 CLOCK HANDS
3" = 1'-0"

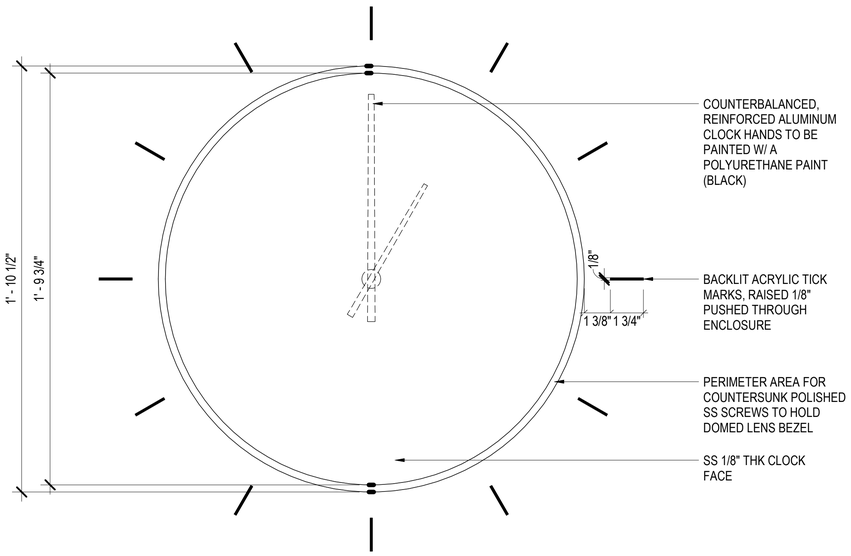

9 CLOCK FACE
3" = 1'-0"

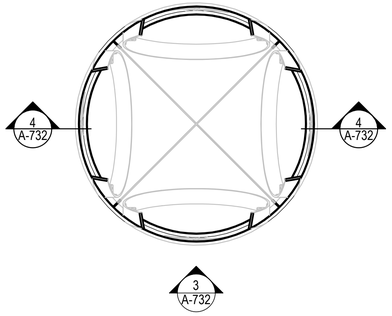

2 CLOCK INTERIOR PLAN
3/4" = 1'-0"

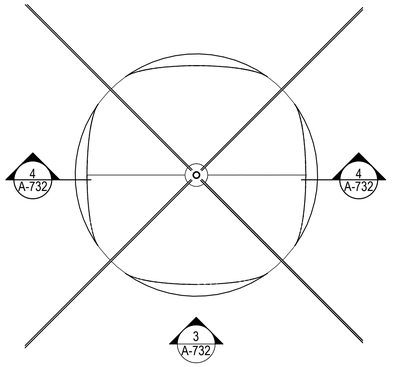

1 CLOCK ROOF PLAN
3/4" = 1'-0"

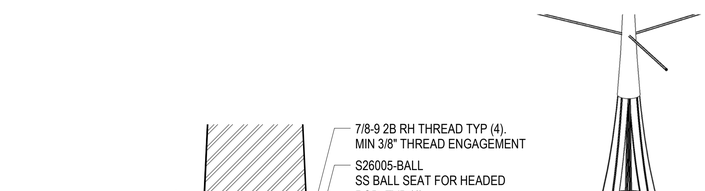

8 CLOCK FERRULE SECTION
12" = 1'-0"

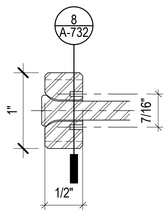

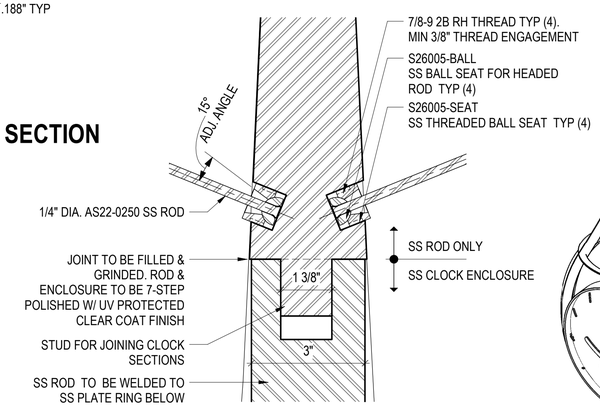

7 CLOCK FERRULE DETAIL
12" = 1'-0"

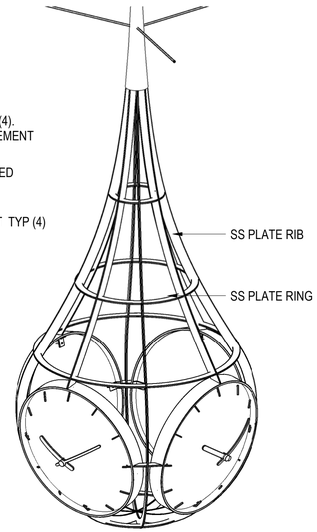

6 CABLE/ROD CONNECTION
6" = 1'-0"

5 ISOMETRIC - CLOCK FRAME

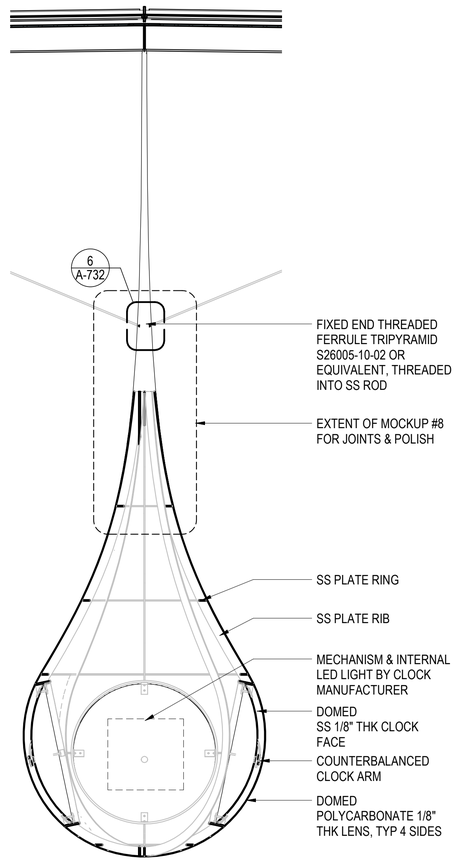

4 CLOCK SECTION
3/4" = 1'-0"

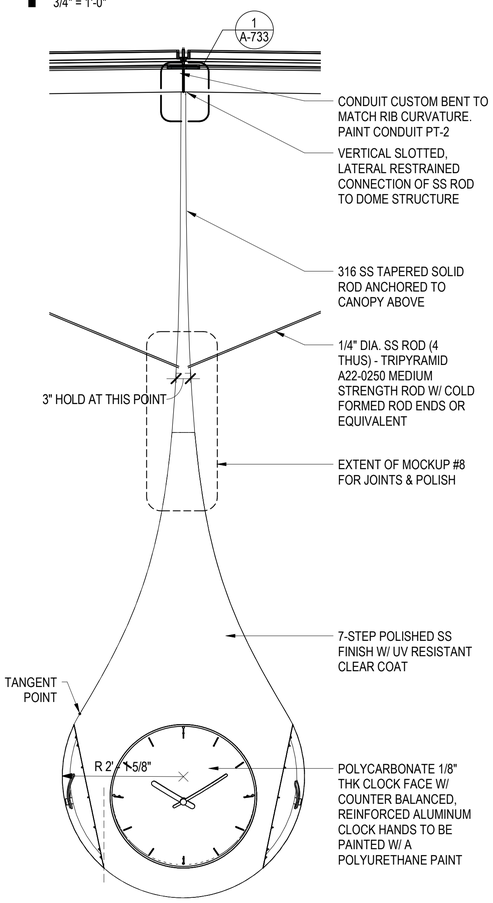

3 CLOCK SOUTH ELEVATION
3/4" = 1'-0"

DESIGN BY:										
DRAWN BY:		4	7/3/2023	ISSUED FOR BID						
CHECKED BY:										
APPROVED BY:		0	9/9/2022	ISSUED FOR PERMIT	MN	KH	SD			
CDOT/APPROVED BY:		NO.	DATE	REVISIONS	DES.	DRW.	CHK.	DCCO	CDOT	

TRANSYSTEMS
222 SOUTH RIVERSIDE PLAZA SUITE 610
CHICAGO, ILLINOIS 60606

SKIDMORE, OWINGS & MERRILL LLP
224 SOUTH MICHIGAN AVENUE, SUITE 1000
CHICAGO, ILLINOIS 60604

CHICAGO DEPARTMENT OF TRANSPORTATION
DIVISION OF ENGINEERING

STATE / LAKE LOOP ELEVATED STATION
200 NORTH STATE STREET, CHICAGO, IL 60601

SPEC. NO.

STATIONHOUSE CLOCK

DRAWING NO. A-732

CDOT PROJECT D-1-209 | DATE: 9/9/2022 | REVISION NO.

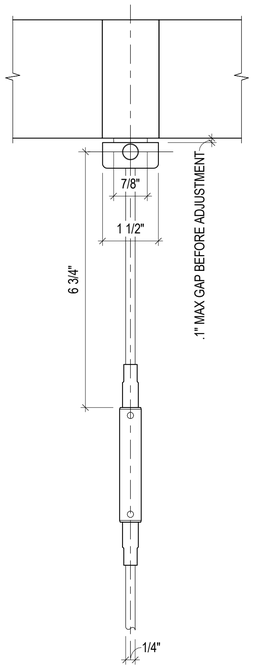

6 DETAIL ELEVATION
6" = 1'-0"

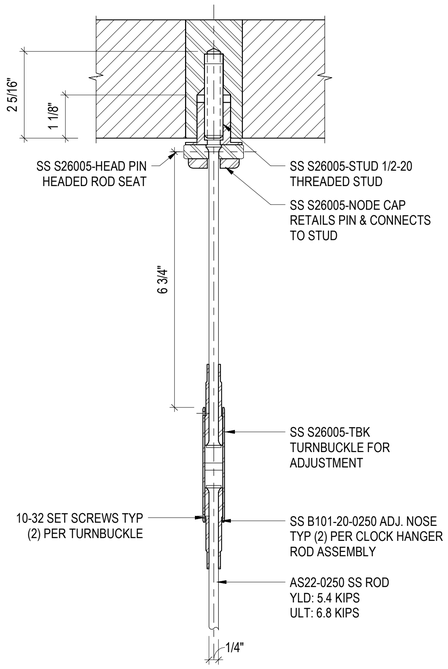

5 DETAIL SECTION
6" = 1'-0"

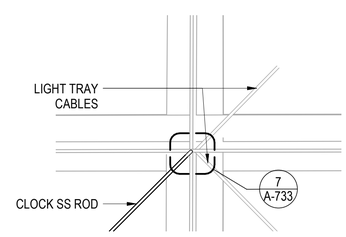

4 REFLECTED CEILING PLAN
1 1/2" = 1'-0"

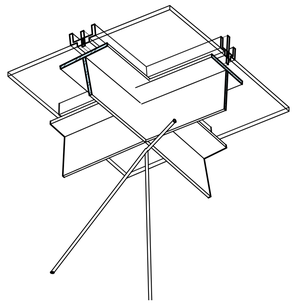

3 ISOMETRIC VIEW

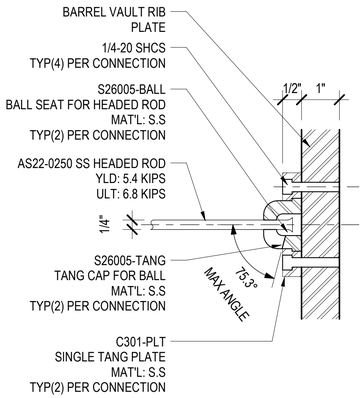

8 DETAIL SECTION
6" = 1'-0"

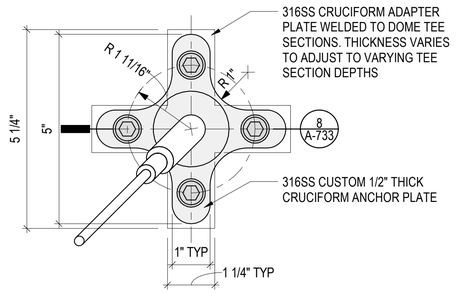

7 DETAIL RCP
6" = 1'-0"

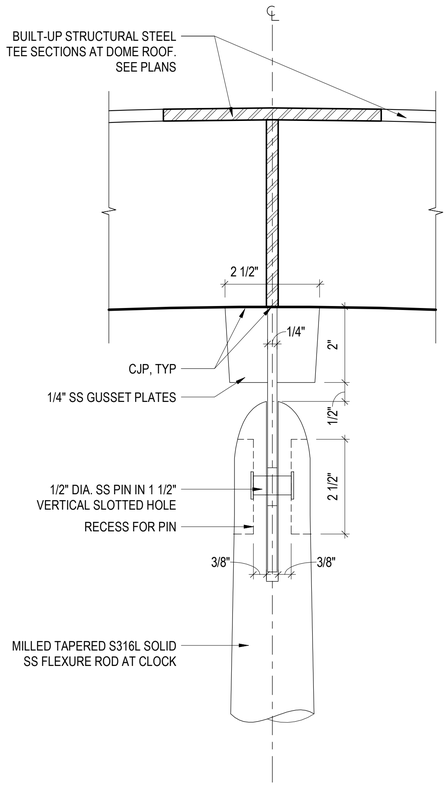

2 SECTION DETAIL - DOME CONNECTION
6" = 1'-0"

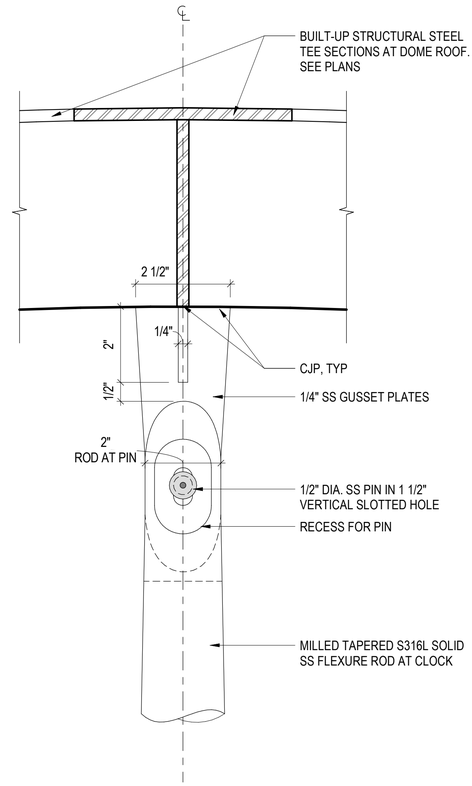

1 SECTION DETAIL - DOME CONNECTION
6" = 1'-0"

DESIGN BY:										
DRAWN BY:		4	7/3/2023	ISSUED FOR BID						
CHECKED BY:										
APPROVED BY:		0	9/9/2022	ISSUED FOR PERMIT	Designe	Author	Checker			
CDOT/APPROVED BY:		NO.	DATE	REVISIONS	DES.	DRW.	CHK.	DCCO	CDOT	

TRANSYSTEMS
222 SOUTH RIVERSIDE PLAZA SUITE 610
CHICAGO, ILLINOIS 60606

SKIDMORE, OWINGS & MERRILL LLP
224 SOUTH MICHIGAN AVENUE, SUITE 1000
CHICAGO, ILLINOIS 60604

CHICAGO DEPARTMENT
OF TRANSPORTATION
DIVISION OF ENGINEERING

STATE / LAKE LOOP ELEVATED STATION
200 NORTH STATE STREET, CHICAGO, IL 60601

SPEC. NO.

STATIONHOUSE CLOCK DETAILS

DRAWING NO.
A-733

CDOT PROJECT D-1-209 | DATE: 9/9/2022 | REVISION NO.

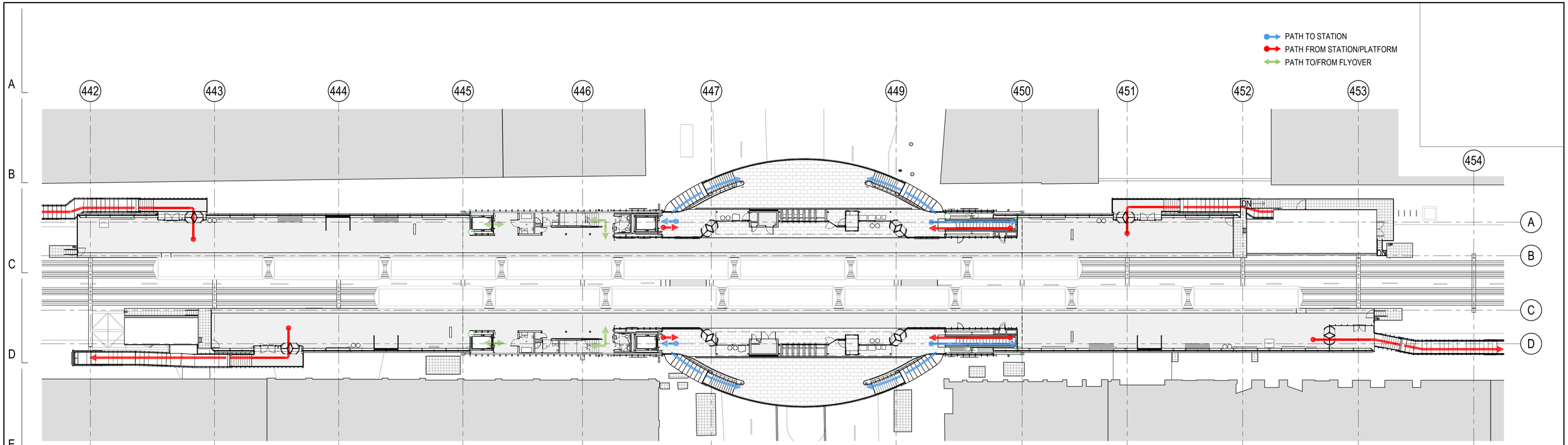

1 PLATFORM LEVEL - CIRCULATION DIAGRAM
1" = 20'-0"

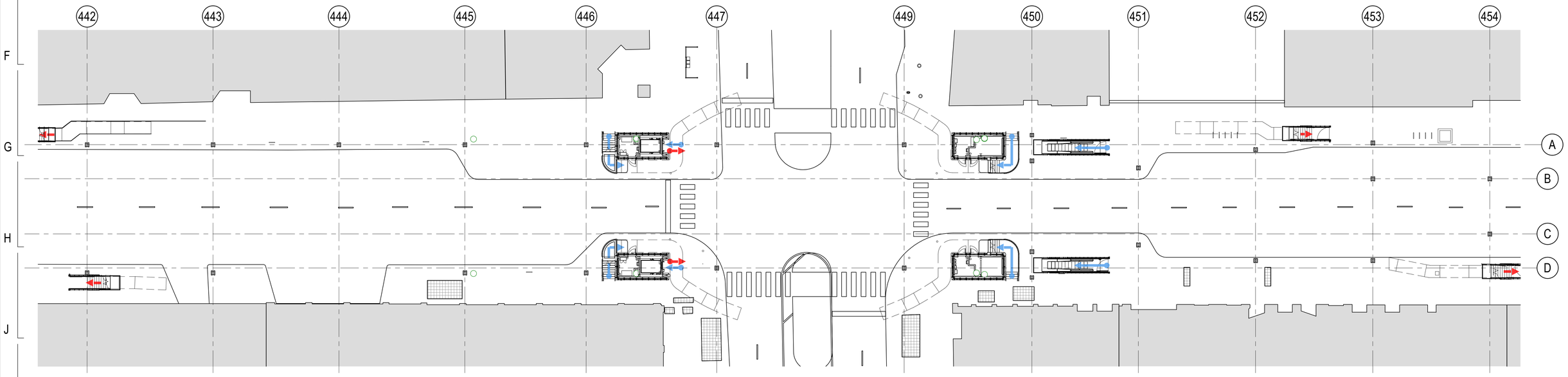

2 STREET LEVEL - CIRCULATION DIAGRAM
1" = 20'-0"

DESIGN BY:									
DRAWN BY:		4	7/3/2023	ISSUED FOR BID					
CHECKED BY:									
APPROVED BY:		0	9/9/2022	ISSUED FOR PERMIT	MN	KH	SD		
CDOT/APPROVED BY:		NO.	DATE	REVISIONS	DES.	DRW.	CHK.	DCCO	CDOT

TRANSYSTEMS
222 SOUTH RIVERSIDE PLAZA SUITE 610
CHICAGO, ILLINOIS 60606

SKIDMORE, OWINGS & MERRILL LLP
224 SOUTH MICHIGAN AVENUE, SUITE 1000
CHICAGO, ILLINOIS 60604

CHICAGO DEPARTMENT OF TRANSPORTATION
DIVISION OF ENGINEERING

STATE / LAKE LOOP ELEVATED STATION
200 NORTH STATE STREET, CHICAGO, IL 60601

CIRCULATION DIAGRAMS

CDOT PROJECT D-1-209 | DATE: 9/9/2022

SPEC. NO.

DRAWING NO. AG-011

REVISION NO.

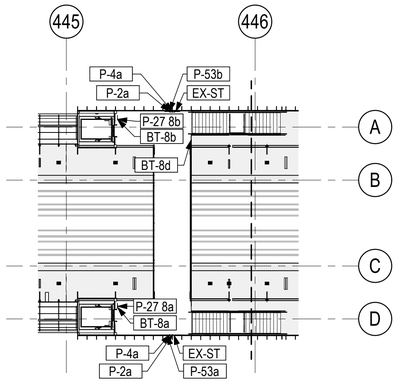

2 FLYOVER PLAN

1" = 20'-0"

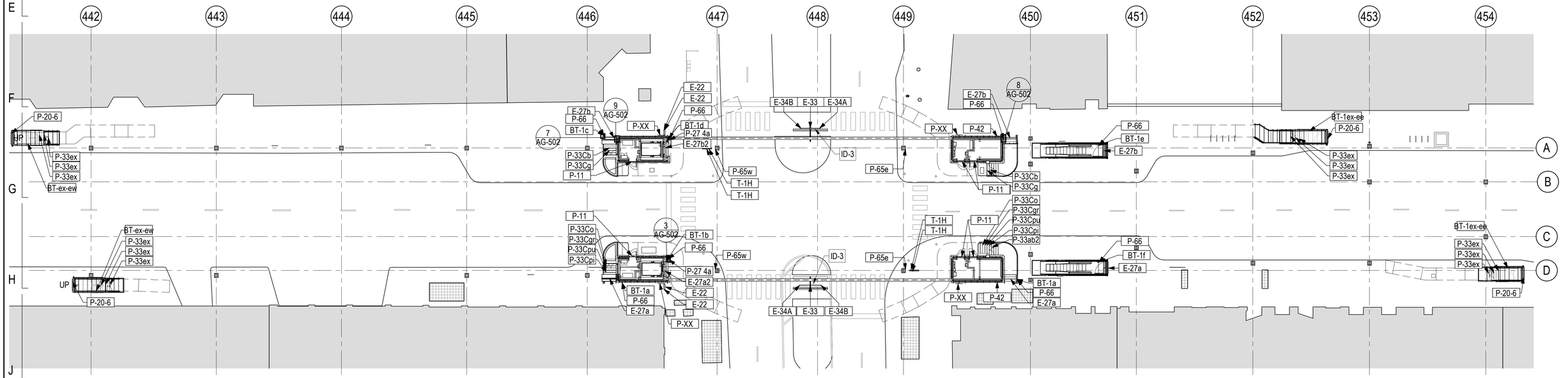

1 STREET LEVEL - SIGNAGE PLAN

1" = 20'-0"

DESIGN BY:										
DRAWN BY:		4	7/3/2023	ISSUED FOR BID						
CHECKED BY:										
APPROVED BY:		0	9/9/2022	ISSUED FOR PERMIT	MN	KH	SD			
CDOT/APPROVED BY:		NO.	DATE	REVISIONS	DES.	DRW.	CHK.	DCCO	CDOT	

TranSystems
TRANSYSTEMS
222 SOUTH RIVERSIDE PLAZA SUITE 610
CHICAGO, ILLINOIS 60606

SOM
SKIDMORE, OWINGS & MERRILL LLP
224 SOUTH MICHIGAN AVENUE, SUITE 1000
CHICAGO, ILLINOIS 60604

CDOT
CHICAGO DEPARTMENT OF TRANSPORTATION
DIVISION OF ENGINEERING

STATE / LAKE LOOP ELEVATED STATION
200 NORTH STATE STREET, CHICAGO, IL 60601

SPEC. NO.

STREET & FLYOVER LEVEL SIGNAGE PLANS

DRAWING NO.
AG-101

CDOT PROJECT D-1-209

DATE: 9/9/2022

REVISION NO.

NOTE:
PER COORDINATION BETWEEN CTA & CDOT AND IN ORDER TO MAINTAIN THE SAME TRAIN FLOW THROUGH THIS AREA OF THE LOOP WITH THE SAME SIGNAL BLOCK LAYOUT, 8 CAR TRAIN BERTHING LOCATIONS REMAIN UNCHANGED FROM EXISTING CONDITIONS

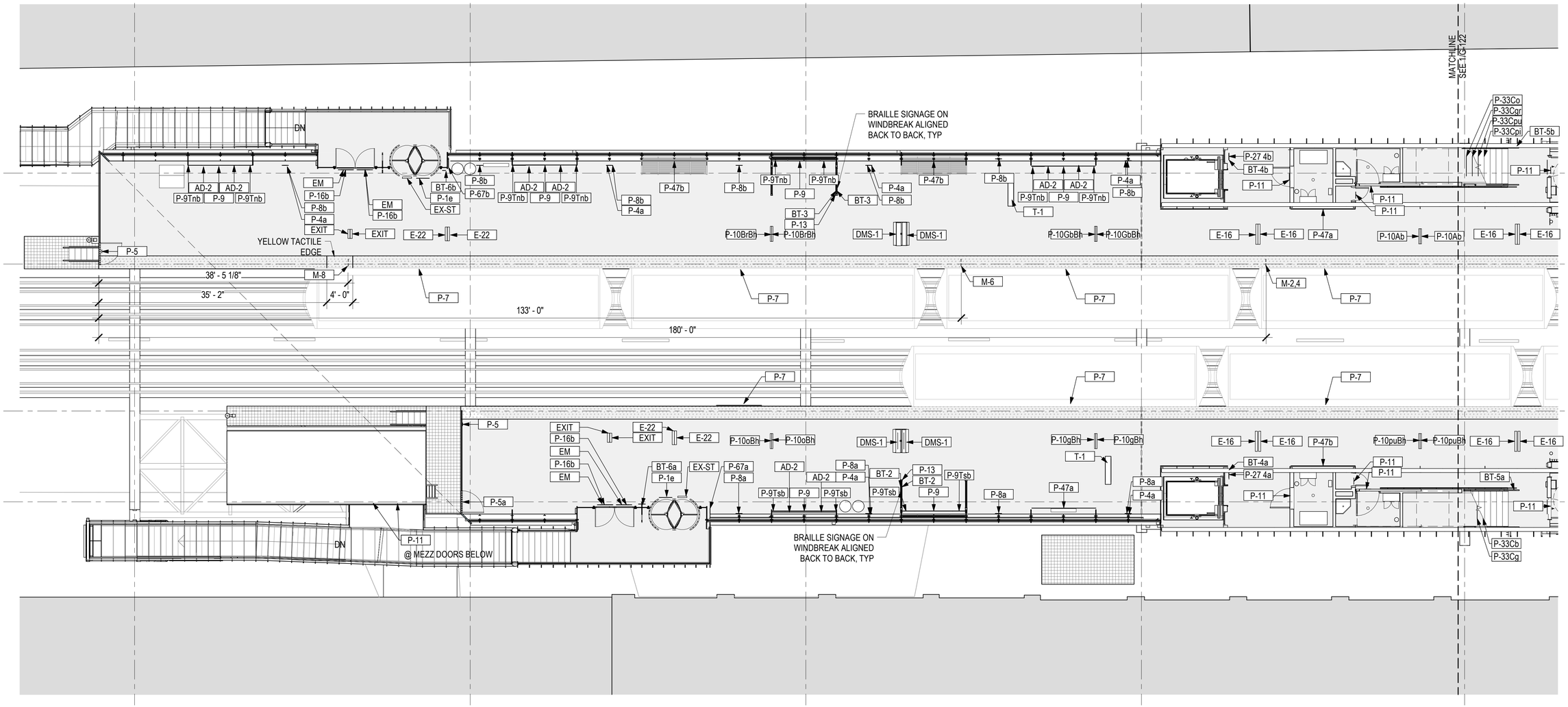

1 PLATFORM LEVEL SIGNAGE PLAN - WEST

1/8" = 1'-0"

DESIGN BY:										
DRAWN BY:		4	7/3/2023	ISSUED FOR BID						
CHECKED BY:										
APPROVED BY:		0	9/9/2022	ISSUED FOR PERMIT	MN	KH	SD			
CDOT/APPROVED BY:		NO.	DATE	REVISIONS	DES.	DRW.	CHK.	DCCO	CDOT	

TRANSYSTEMS
222 SOUTH RIVERSIDE PLAZA SUITE 610
CHICAGO, ILLINOIS 60606

SKIDMORE, OWINGS & MERRILL LLP
224 SOUTH MICHIGAN AVENUE, SUITE 1000
CHICAGO, ILLINOIS 60604

CHICAGO DEPARTMENT OF TRANSPORTATION
DIVISION OF ENGINEERING

STATE / LAKE LOOP ELEVATED STATION
200 NORTH STATE STREET, CHICAGO, IL 60601

PLATFORM LEVEL SIGNAGE PLAN - WEST

CDOT PROJECT D-1-209

DATE: 9/9/2022

SPEC. NO.

DRAWING NO. AG-121

REVISION NO.

NOTE:
PER COORDINATION BETWEEN CTA & CDOT AND IN ORDER TO MAINTAIN THE SAME TRAIN FLOW THROUGH THIS AREA OF THE LOOP WITH THE SAME SIGNAL BLOCK LAYOUT, 8 CAR TRAIN BERTHING LOCATIONS REMAIN UNCHANGED FROM EXISTING CONDITIONS

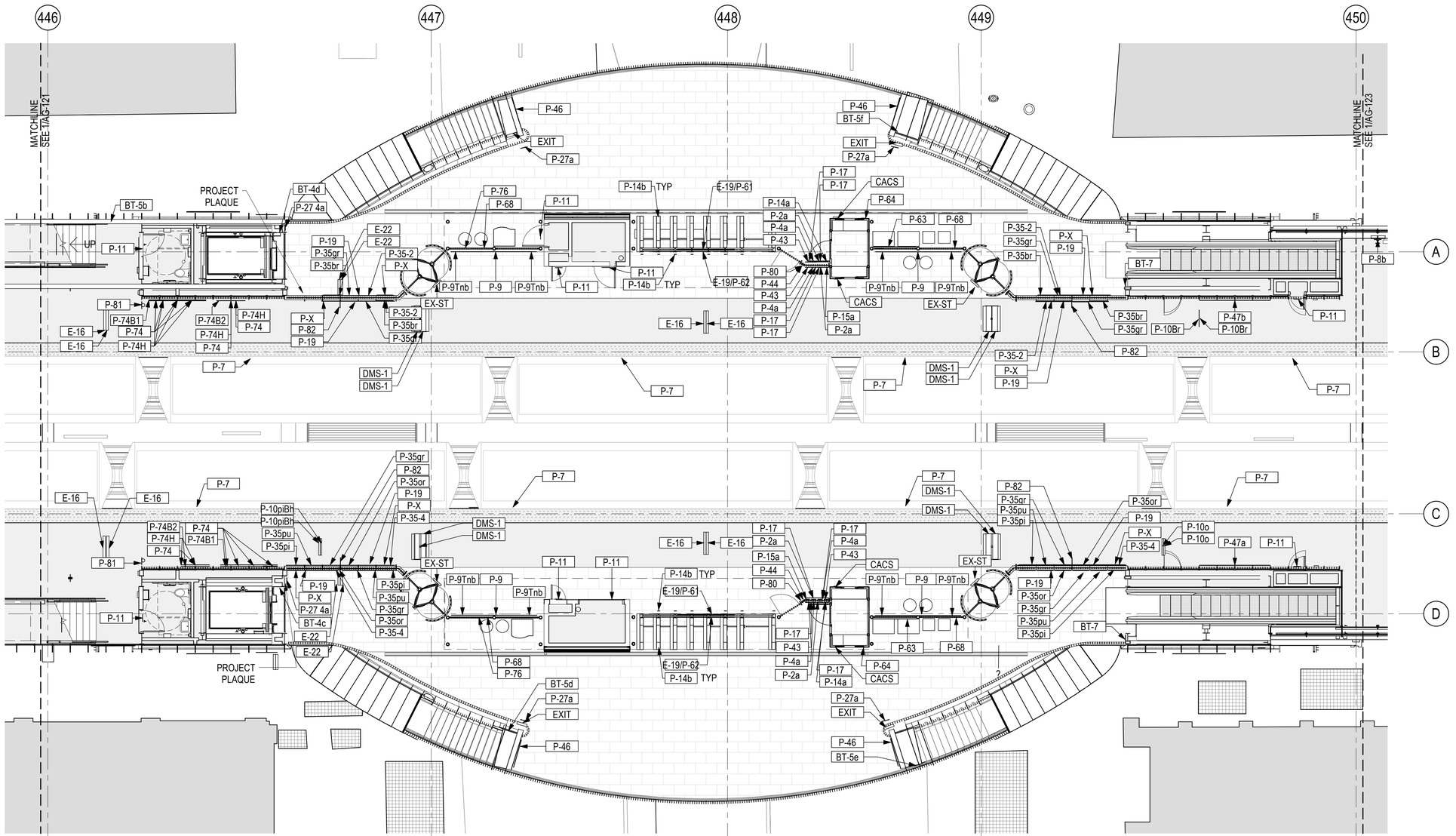

1 PLATFORM LEVEL SIGNAGE PLAN - CENTER

1/8" = 1'-0"

DESIGN BY:										
DRAWN BY:		4	7/3/2023	ISSUED FOR BID						
CHECKED BY:										
APPROVED BY:		0	9/9/2022	ISSUED FOR PERMIT	MN	KH	SD			
CDOT/APPROVED BY:		NO.	DATE	REVISIONS	DES.	DRW.	CHK.	DCCO	CDOT	

TRANSYSTEMS
222 SOUTH RIVERSIDE PLAZA SUITE 610
CHICAGO, ILLINOIS 60606

SKIDMORE, OWINGS & MERRILL LLP
224 SOUTH MICHIGAN AVENUE, SUITE 1000
CHICAGO, ILLINOIS 60604

CHICAGO DEPARTMENT
OF TRANSPORTATION
DIVISION OF ENGINEERING

STATE / LAKE LOOP ELEVATED STATION
200 NORTH STATE STREET, CHICAGO, IL 60601

PLATFORM LEVEL SIGNAGE PLAN - CENTER

SPEC. NO.

DRAWING NO.
AG-122

CDOT PROJECT D-1-209

DATE: 9/9/2022

REVISION NO.

NOTE:
PER COORDINATION BETWEEN CTA & CDOT AND IN ORDER TO MAINTAIN THE SAME TRAIN FLOW THROUGH THIS AREA OF THE LOOP WITH THE SAME SIGNAL BLOCK LAYOUT, 8 CAR TRAIN BERTHING LOCATIONS REMAIN UNCHANGED FROM EXISTING CONDITIONS

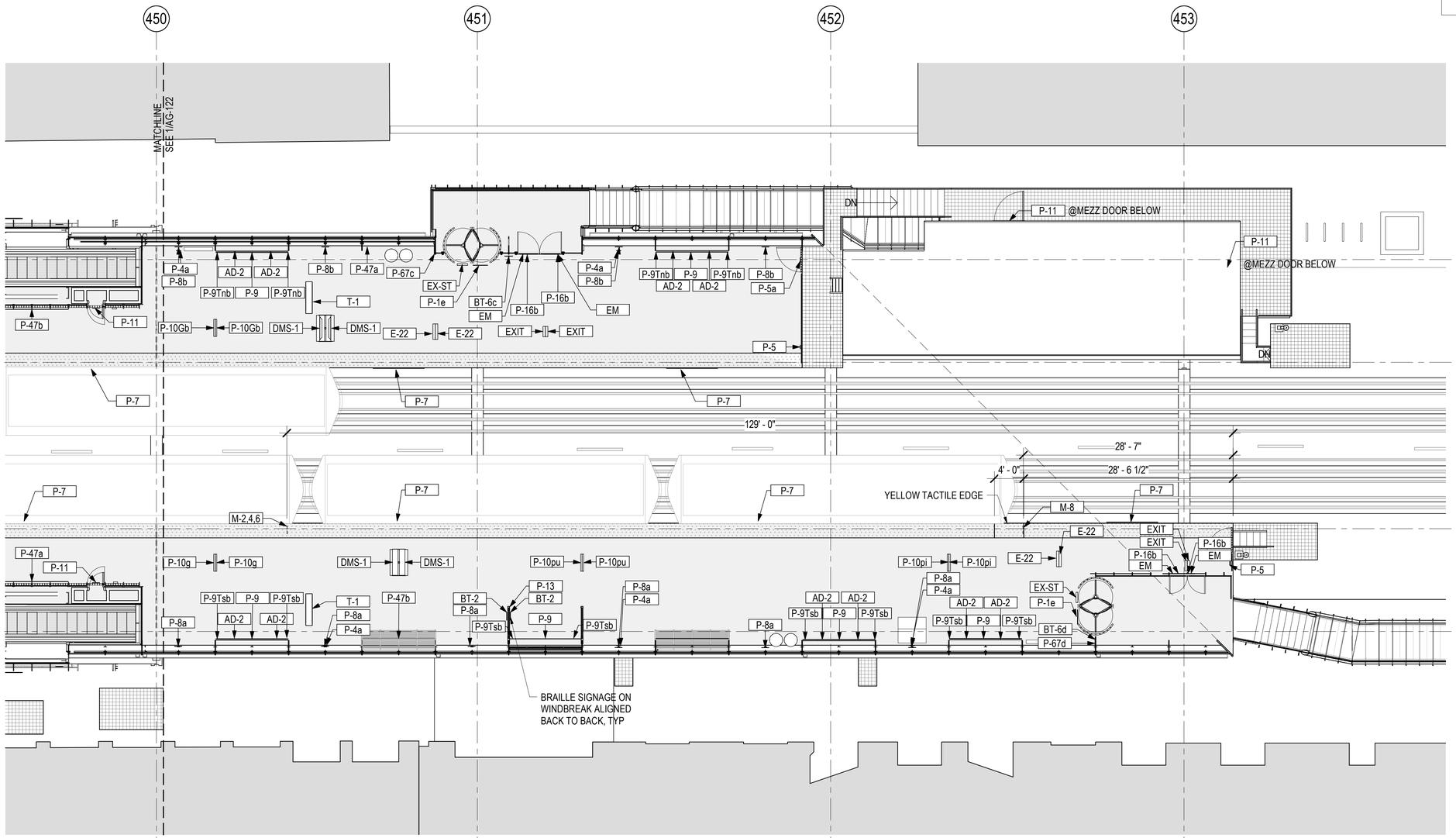

1 PLATFORM LEVEL SIGNAGE PLAN - EAST

1/8" = 1'-0"

DESIGN BY:										
DRAWN BY:		4	7/3/2023	ISSUED FOR BID						
CHECKED BY:										
APPROVED BY:		0	9/9/2022	ISSUED FOR PERMIT	MN	KH	SD			
CDOT/APPROVED BY:		NO.	DATE	REVISIONS	DES.	DRW.	CHK.	DCCO	CDOT	

TRANSYSTEMS
222 SOUTH RIVERSIDE PLAZA SUITE 610
CHICAGO, ILLINOIS 60606

SKIDMORE, OWINGS & MERRILL LLP
224 SOUTH MICHIGAN AVENUE, SUITE 1000
CHICAGO, ILLINOIS 60604

CHICAGO DEPARTMENT OF TRANSPORTATION
DIVISION OF ENGINEERING

STATE / LAKE LOOP ELEVATED STATION
200 NORTH STATE STREET, CHICAGO, IL 60601

SPEC. NO.

PLATFORM LEVEL SIGNAGE PLAN - EAST

DRAWING NO.
AG-123

CDOT PROJECT D-1-209

DATE: 9/9/2022

REVISION NO.

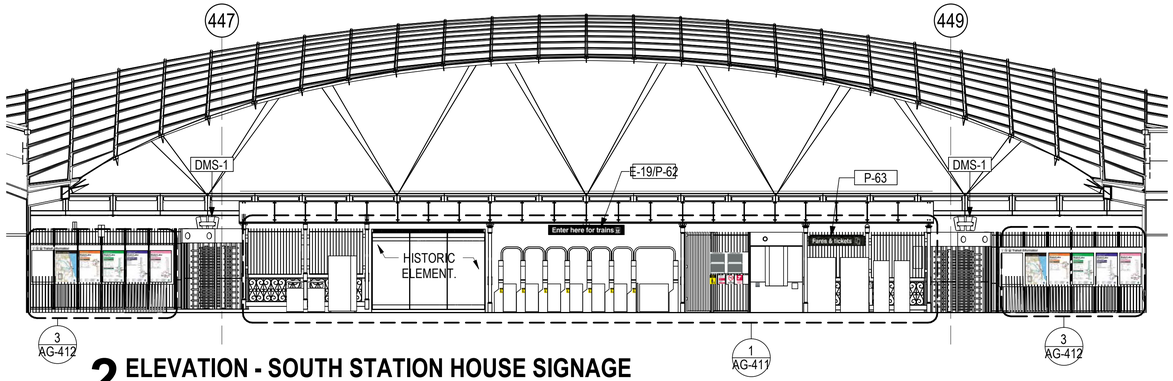

2 ELEVATION - SOUTH STATION HOUSE SIGNAGE

1/8" = 1'-0"

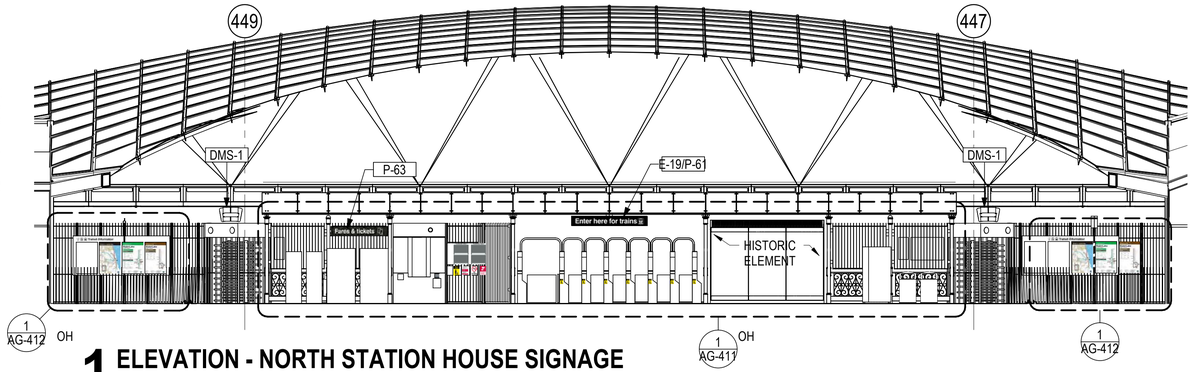

1 ELEVATION - NORTH STATION HOUSE SIGNAGE

1/8" = 1'-0"

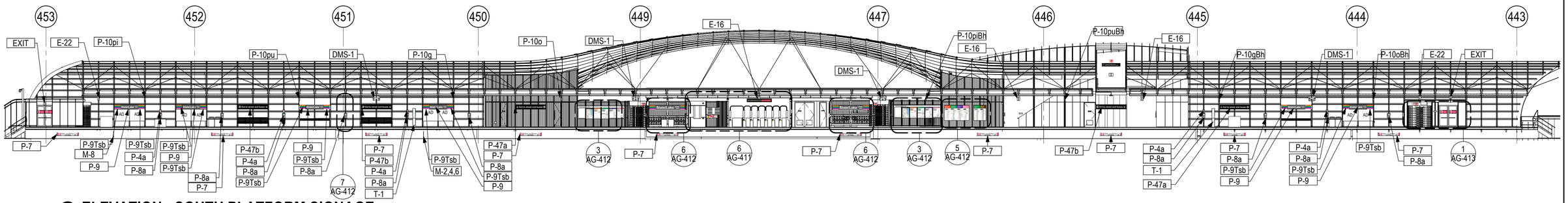

3 ELEVATION - SOUTH PLATFORM SIGNAGE

1/16" = 1'-0"

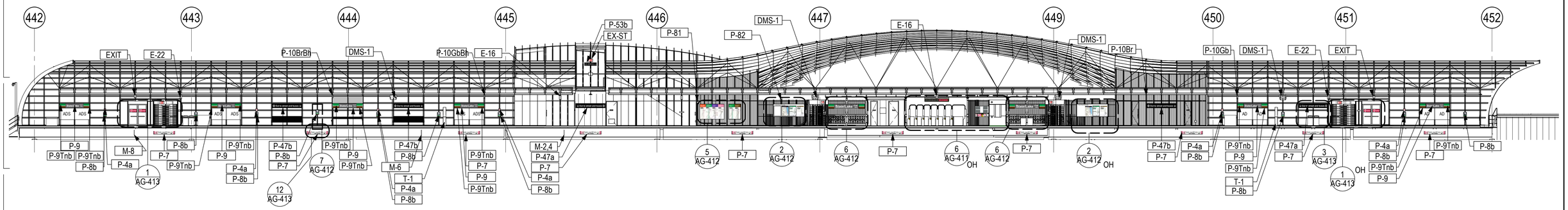

4 ELEVATION - NORTH PLATFORM SIGNAGE

1/16" = 1'-0"

DESIGN BY:										
DRAWN BY:		4	7/3/2023	ISSUED FOR BID						
CHECKED BY:										
APPROVED BY:		0	9/9/2022	ISSUED FOR PERMIT	MN	KH	SD			
CDOT/APPROVED BY:		NO.	DATE	REVISIONS	DES.	DRW.	CHK.	DCCO	CDOT	

TRANSYSTEMS
222 SOUTH RIVERSIDE PLAZA SUITE 610
CHICAGO, ILLINOIS 60606

SKIDMORE, OWINGS & MERRILL LLP
224 SOUTH MICHIGAN AVENUE, SUITE 1000
CHICAGO, ILLINOIS 60604

CHICAGO DEPARTMENT OF TRANSPORTATION
DIVISION OF ENGINEERING

STATE / LAKE LOOP ELEVATED STATION
200 NORTH STATE STREET, CHICAGO, IL 60601

SPEC. NO.

PLATFORM LEVEL SIGNAGE ELEVATIONS

DRAWING NO.
AG-211

CDOT PROJECT D-1-209

DATE: 9/9/2022

REVISION NO.

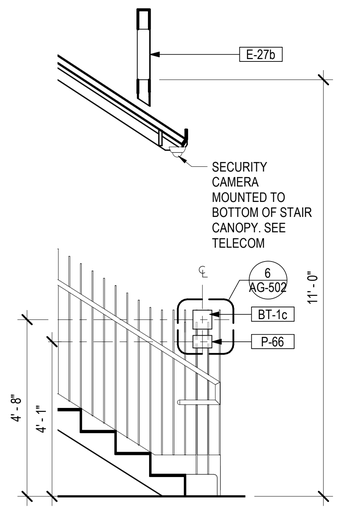

7 ELEVATION - BT-1 GUARDRAIL
1/2" = 1'-0"

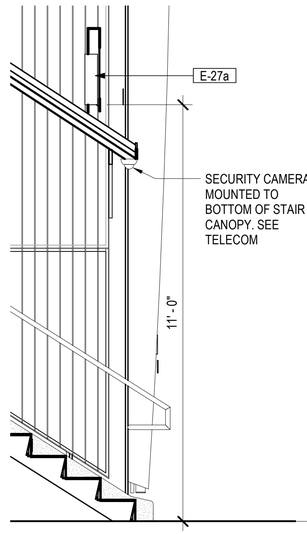

6 ELEVATION - E-27 ABUTMENT
1/2" = 1'-0"

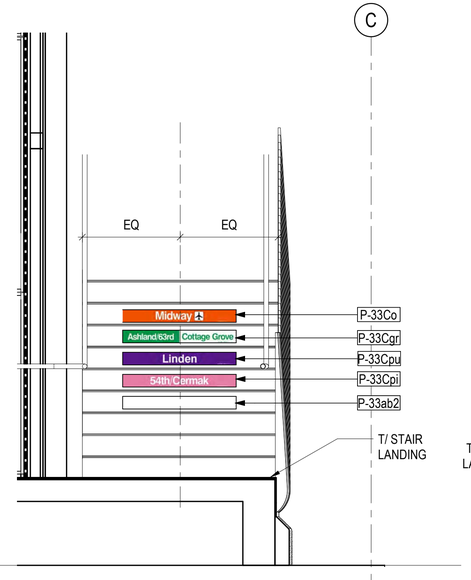

5 ELEVATION - STAIRS SOUTHEAST
1/2" = 1'-0"

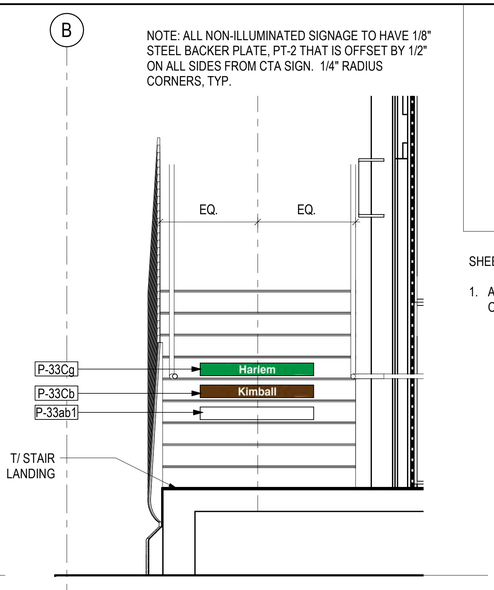

4 ELEVATION - STAIRS NORTHEAST
1/2" = 1'-0"

SHEET NOTES:

1. ALL RISER SIGNS TO BE CENTERED ON RISER

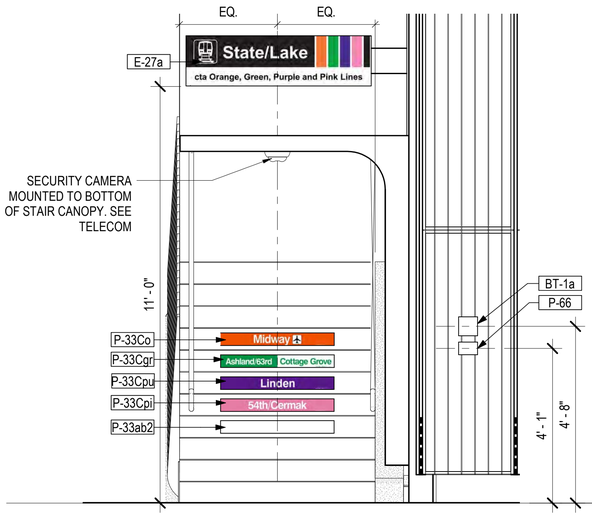

3 ELEVATION - STAIRS SOUTHWEST
1/2" = 1'-0"

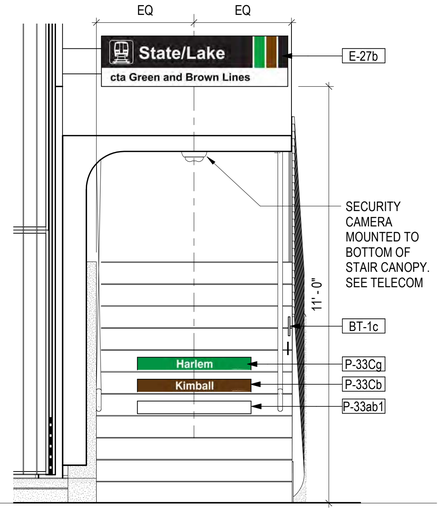

2 ELEVATION - STAIRS NORTHWEST
1/2" = 1'-0"

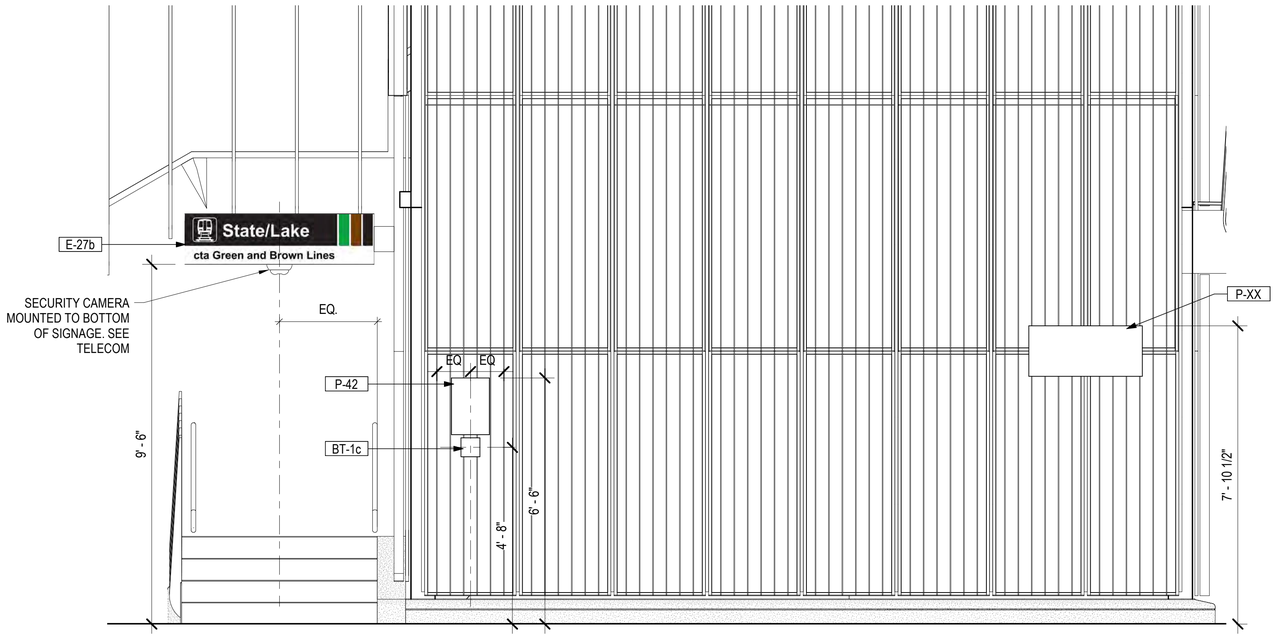

1 ELEVATION - BT & P-42
1/2" = 1'-0"

DESIGN BY:										
DRAWN BY:		4	7/3/2023	ISSUED FOR BID						
CHECKED BY:										
APPROVED BY:		0	9/9/2022	ISSUED FOR PERMIT	MN	KH	SD			
CDOT/APPROVED BY:		NO.	DATE	REVISIONS	DES.	DRW.	CHK.	DCCO	CDOT	

TRANSYSTEMS
222 SOUTH RIVERSIDE PLAZA SUITE 610
CHICAGO, ILLINOIS 60606

SKIDMORE, OWINGS & MERRILL LLP
224 SOUTH MICHIGAN AVENUE, SUITE 1000
CHICAGO, ILLINOIS 60604

CHICAGO DEPARTMENT OF TRANSPORTATION
DIVISION OF ENGINEERING

STATE / LAKE LOOP ELEVATED STATION
200 NORTH STATE STREET, CHICAGO, IL 60601

SPEC. NO.

ENLARGED STREET LEVEL ELEVATIONS

DRAWING NO.
AG-401

CDOT PROJECT D-1-209

DATE: 9/9/2022

REVISION NO.

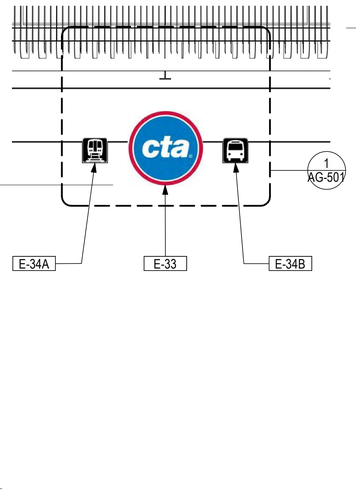

PLATFORM LEVEL
38' - 11"

11 ELEVATION - TYP E-33, E34 SIGNAGE
1/4" = 1'-0"

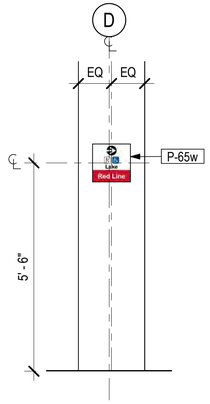

10 ELEVATION - P-65w
1/2" = 1'-0"

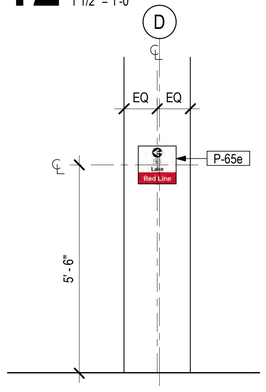

9 ELEVATION - P-65e
1/2" = 1'-0"

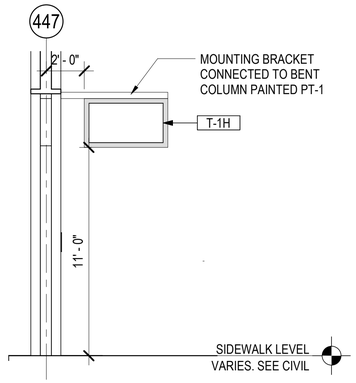

8 ELEVATION - TYP TITAN T-1H
1/4" = 1'-0"

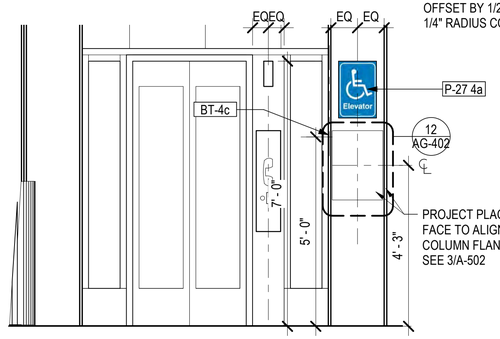

NOTE: ALL NON-ILLUMINATED SIGNAGE TO HAVE 1/8" STEEL BACKER PLATE, PT-2 THAT IS OFFSET BY 1/2" ON ALL SIDES FROM CTA SIGN. 1/4" RADIUS CORNERS, TYP.

7 ELEVATION - SOUTH ELEVATOR
1/2" = 1'-0"

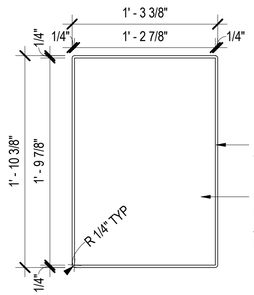

12 PROJECT PLAQUE - SOUTH
1 1/2" = 1'-0"

SHEET NOTES:

1. ALL RISER SIGNS TO BE CENTERED ON RISER

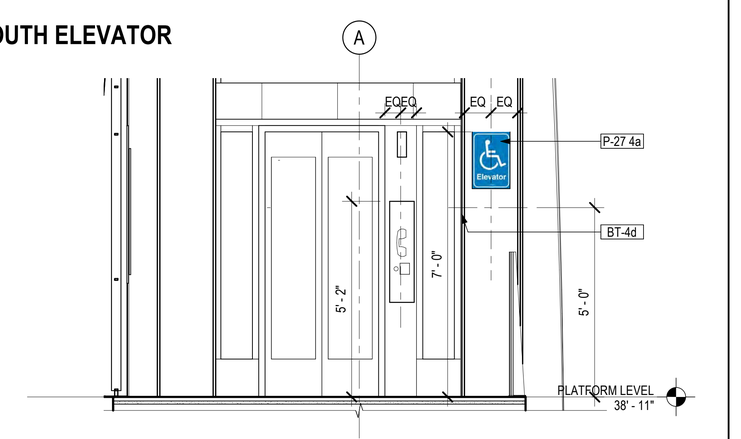

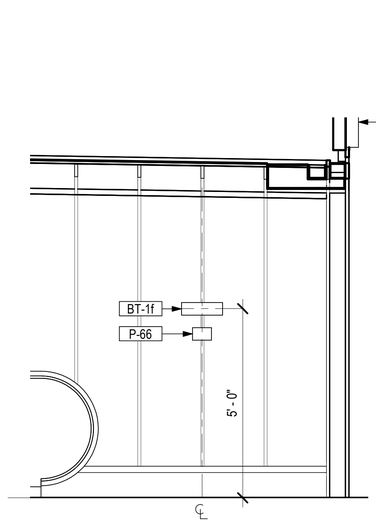

6 ELEVATION - ESCALATOR BT
1/2" = 1'-0"

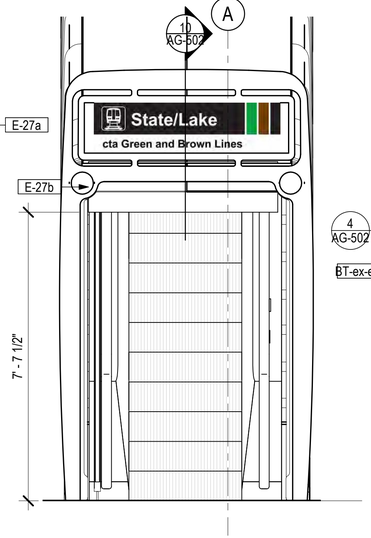

5 ELEVATION - TYP ESCALATOR
1/2" = 1'-0"

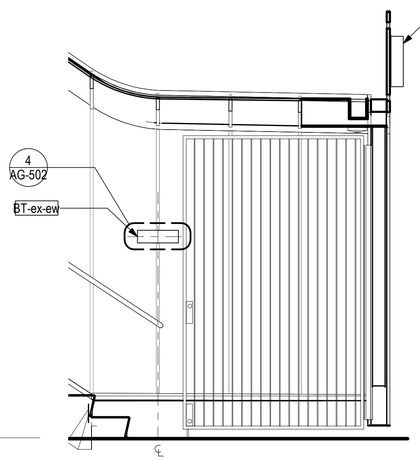

4 ELEVATION - BT-1EX
1/2" = 1'-0"

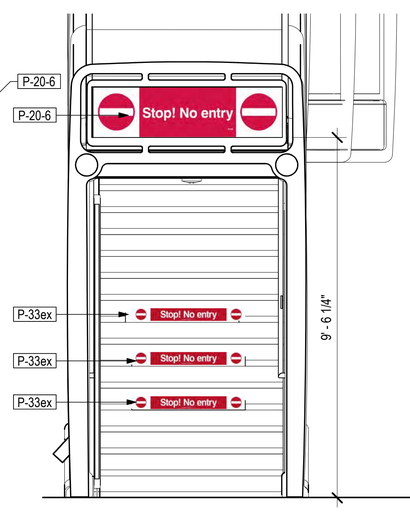

3 ELEVATION - TYP EXIT STAIR
1/2" = 1'-0"

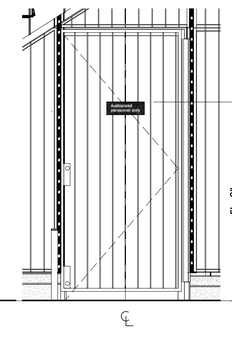

2 ELEVATION - TYP P-11
1/2" = 1'-0"

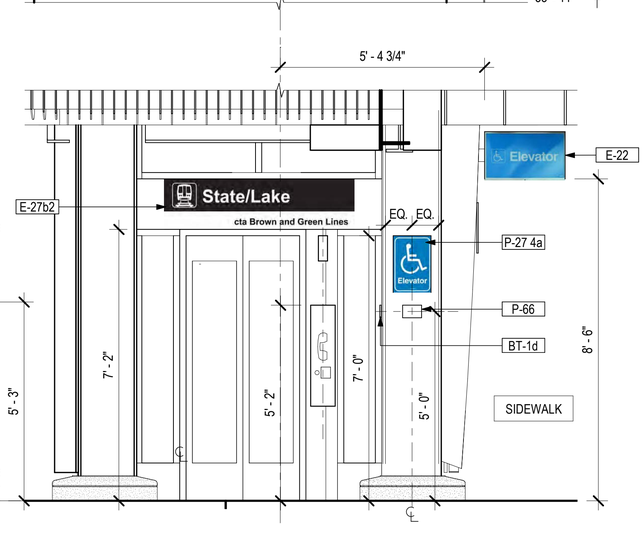

1 ELEVATION - TYP ELEVATOR
1/2" = 1'-0"

DESIGN BY:										
DRAWN BY:		4	7/3/2023	ISSUED FOR BID						
CHECKED BY:										
APPROVED BY:		0	9/9/2022	ISSUED FOR PERMIT	MN	KH	SD			
CDOT/APPROVED BY:		NO.	DATE	REVISIONS	DES.	DRW.	CHK.	DCCO	CDOT	

TRANSYSTEMS
222 SOUTH RIVERSIDE PLAZA SUITE 610
CHICAGO, ILLINOIS 60606

SKIDMORE, OWINGS & MERRILL LLP
224 SOUTH MICHIGAN AVENUE, SUITE 1000
CHICAGO, ILLINOIS 60604

CHICAGO DEPARTMENT OF TRANSPORTATION
DIVISION OF ENGINEERING

STATE / LAKE LOOP ELEVATED STATION
200 NORTH STATE STREET, CHICAGO, IL 60601

SPEC. NO.

ENLARGED STREET LEVEL ELEVATIONS

DRAWING NO.
AG-402

CDOT PROJECT D-1-209 | DATE: 9/9/2022 | REVISION NO.

NOTE: ALL NON-ILLUMINATED SIGNAGE TO HAVE 1/8" STEEL BACKER PLATE, PT-2 THAT IS OFFSET BY 1/2" ON ALL SIDES FROM CTA SIGN. 1/4" RADIUS CORNERS, TYP.

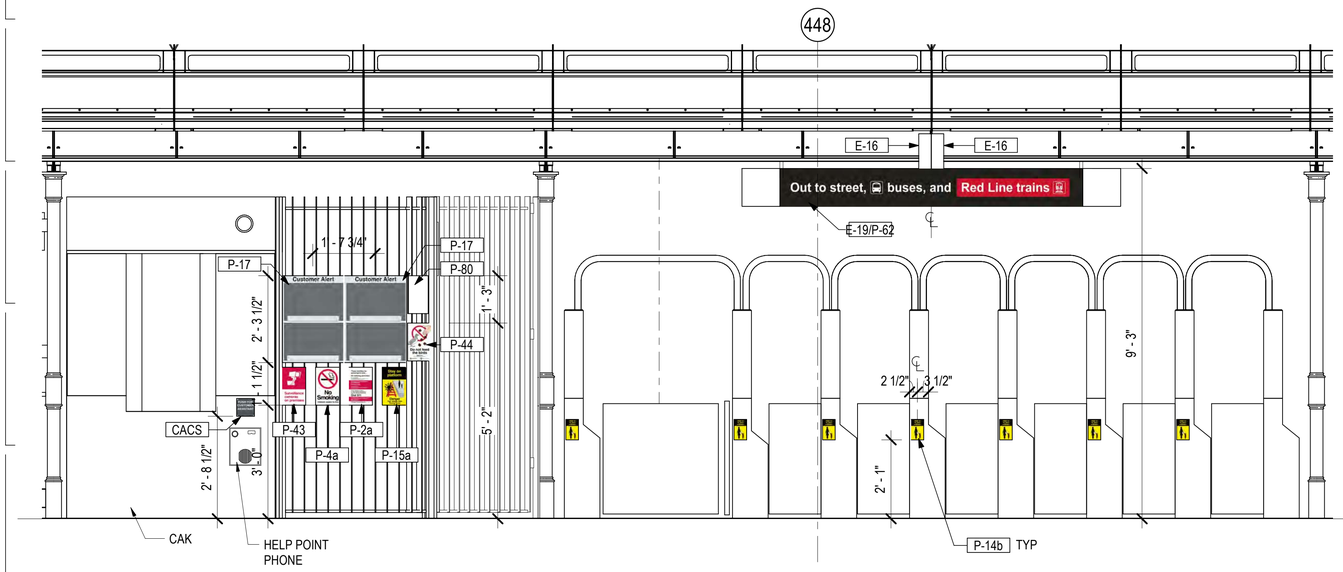

6 ELEVATION - CAK, FARE ARRAY - PAID AREA
1/2" = 1'-0"

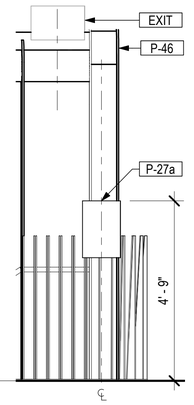

5 ELEVATION - P27
1/2" = 1'-0"

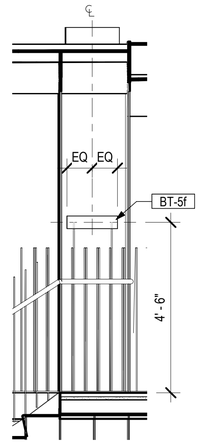

4 ELEVATION - B-1 POST
1/2" = 1'-0"

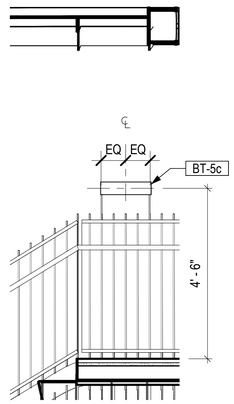

3 ELEVATION - B-1 GUARDRAIL
1/2" = 1'-0"

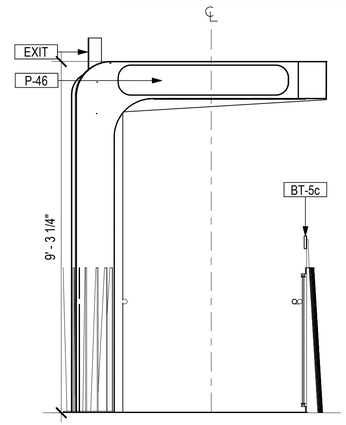

2 ELEVATION - FEATURE STAIR
1/2" = 1'-0"

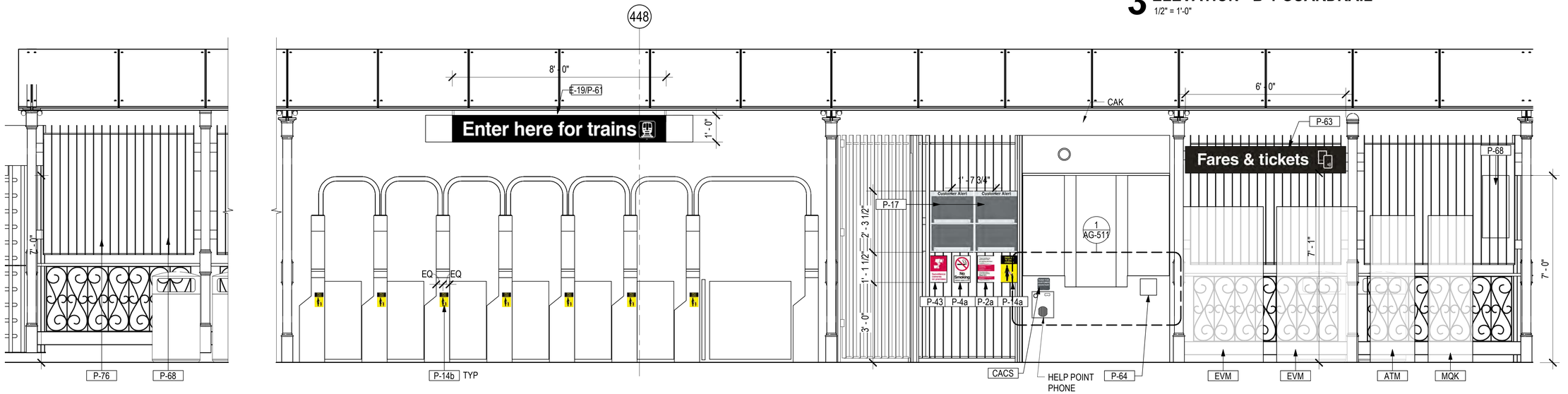

1 ELEVATION - CAK, FARE ARRAY - UNPAID AREA
1/2" = 1'-0"

DESIGN BY:										
DRAWN BY:		4	7/3/2023	ISSUED FOR BID						
CHECKED BY:										
APPROVED BY:		0	9/9/2022	ISSUED FOR PERMIT	MN	KH	SD			
CDOT/APPROVED BY:		NO.	DATE	REVISIONS	DES.	DRW.	CHK.	DCCO	CDOT	

TranSystems
TRANSYSTEMS
222 SOUTH RIVERSIDE PLAZA SUITE 610
CHICAGO, ILLINOIS 60606

SOM
SKIDMORE, OWINGS & MERRILL LLP
224 SOUTH MICHIGAN AVENUE, SUITE 1000
CHICAGO, ILLINOIS 60604

CDOT
CHICAGO DEPARTMENT OF TRANSPORTATION
DIVISION OF ENGINEERING

STATE / LAKE LOOP ELEVATED STATION
200 NORTH STATE STREET, CHICAGO, IL 60601

ENLARGED PLATFORM LEVEL ELEVATIONS

CDOT PROJECT D-1-209

DATE: 9/9/2022

SPEC. NO.

DRAWING NO. AG-411

REVISION NO.

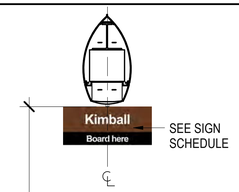

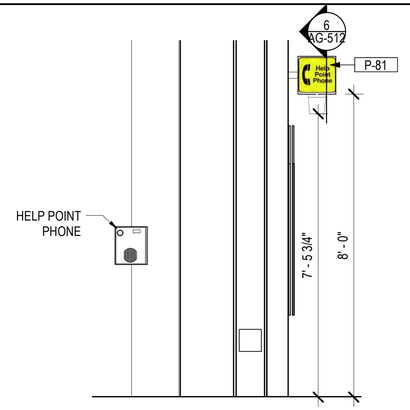

11 ELEVATION - HPT
1/2" = 1'-0"

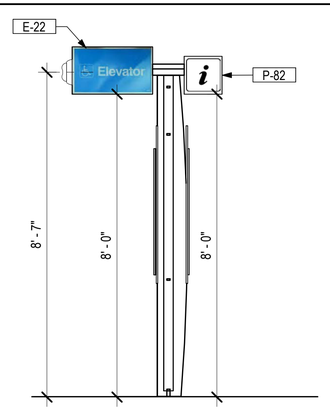

10 ELEVATION - i SIGN
1/2" = 1'-0"

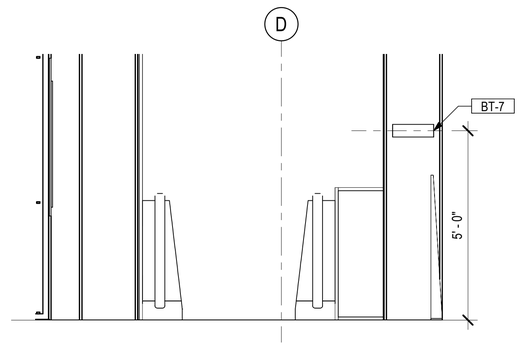

9 ELEVATION - BT-7 SOUTH
1/2" = 1'-0"

NOTE: ALL NON-ILLUMINATED SIGNAGE TO HAVE 1/8" STEEL BACKER PLATE, PT-2 THAT IS OFFSET BY 1/2" ON ALL SIDES FROM CTA SIGN. 1/4" RADIUS CORNERS, TYP.

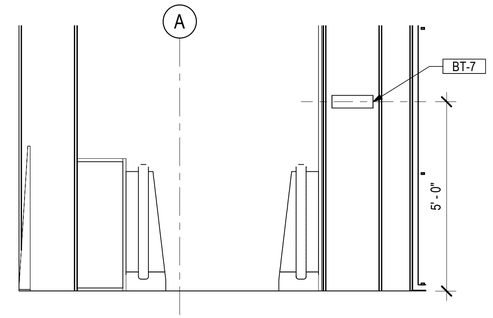

8 ELEVATION - BT-7 NORTH
1/2" = 1'-0"

12 ELEVATION - LIGHT TRAY SIGNAGE
1/2" = 1'-0"

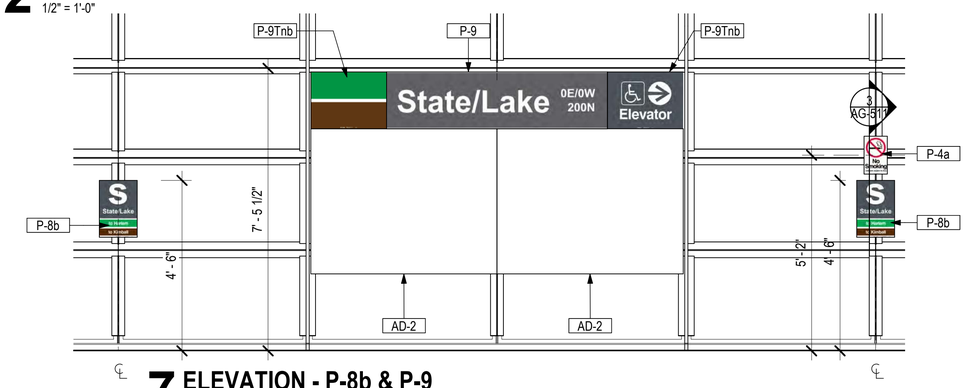

7 ELEVATION - P-8b & P-9
1/2" = 1'-0"

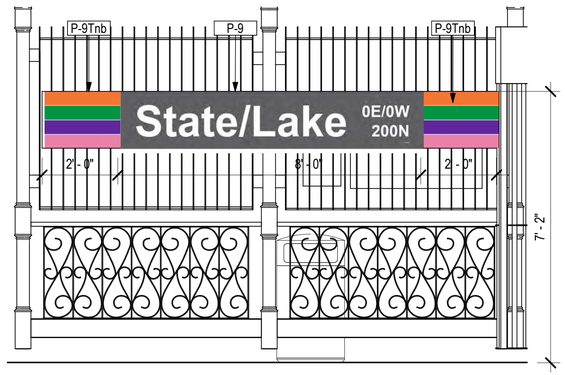

6 ELEVATION - TYP P9
1/2" = 1'-0"

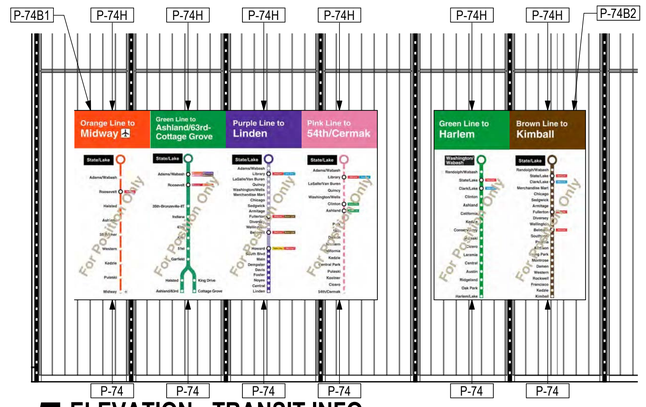

5 ELEVATION - TRANSIT INFO
1/2" = 1'-0"

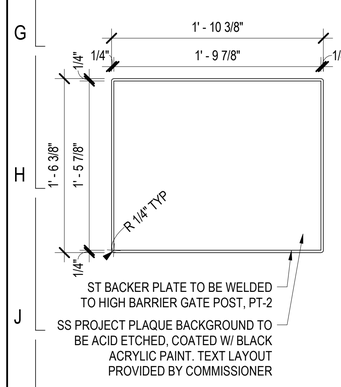

4 PROJECT PLAQUE - NORTH
1 1/2" = 1'-0"

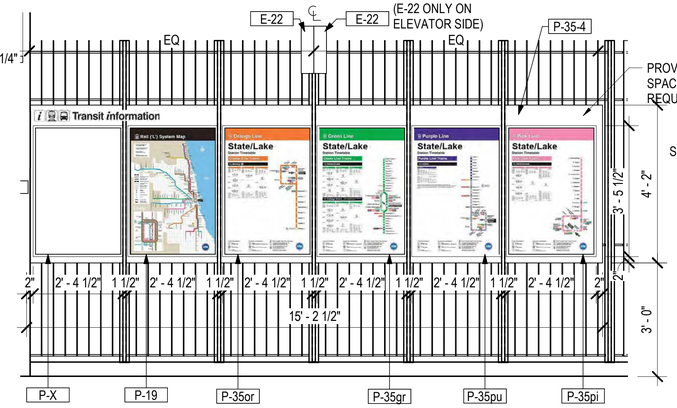

3 ELEVATION - TRANSIT INFO - SOUTH UNPAID (PAID SIM)
1/2" = 1'-0"

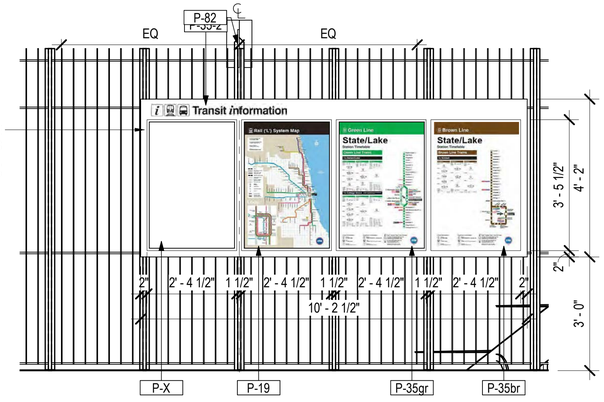

2 ELEVATION - TRANSIT INFO - NORTH PAID
1/2" = 1'-0"

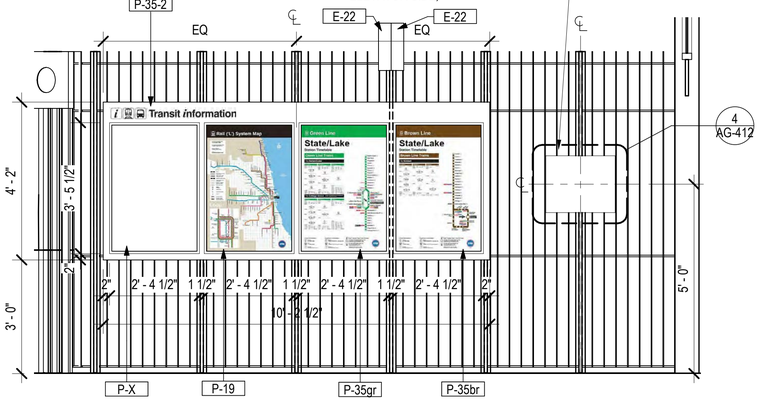

1 ELEVATION - TRANSIT INFO - NORTH UNPAID
1/2" = 1'-0"

DESIGN BY:										
DRAWN BY:		4	7/3/2023	ISSUED FOR BID						
CHECKED BY:										
APPROVED BY:		0	9/9/2022	ISSUED FOR PERMIT	MN	KH	SD			
CDOT/APPROVED BY:		NO.	DATE	REVISIONS	DES.	DRW.	CHK.	DCCO	CDOT	

TRANSYSTEMS
222 SOUTH RIVERSIDE PLAZA SUITE 610
CHICAGO, ILLINOIS 60606

SKIDMORE, OWINGS & MERRILL LLP
224 SOUTH MICHIGAN AVENUE, SUITE 1000
CHICAGO, ILLINOIS 60604

CHICAGO DEPARTMENT OF TRANSPORTATION
DIVISION OF ENGINEERING

STATE / LAKE LOOP ELEVATED STATION
200 NORTH STATE STREET, CHICAGO, IL 60601

ENLARGED PLATFORM LEVEL ELEVATIONS

SPEC. NO.

DRAWING NO. AG-412

CDOT PROJECT D-1-209 | DATE: 9/9/2022 | REVISION NO.

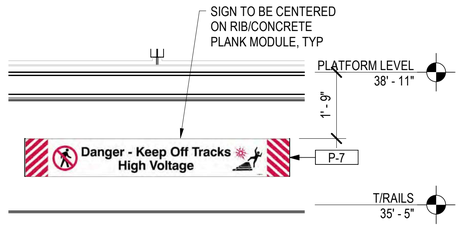

12 AG - PLATFORM - P-7
1/2" = 1'-0"

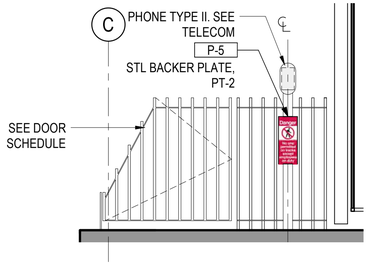

11 ELEVATION - P-5 W/ PHONE
1/2" = 1'-0"

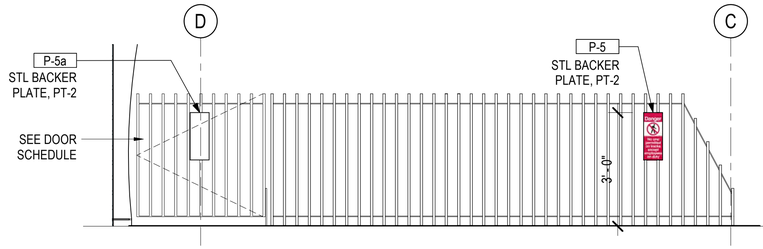

10 ELEVATION - P-5a
1/2" = 1'-0"

NOTE: ALL NON-ILLUMINATED SIGNAGE TO HAVE 1/8" STEEL BACKER PLATE, PT-2 THAT IS OFFSET BY 1/2" ON ALL SIDES FROM CTA SIGN. 1/4" RADIUS CORNERS, TYP.

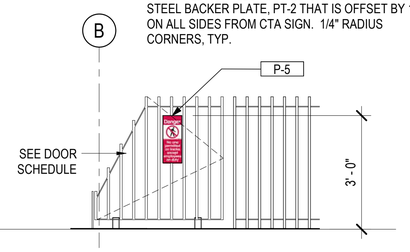

9 ELEVATION - P-5
1/2" = 1'-0"

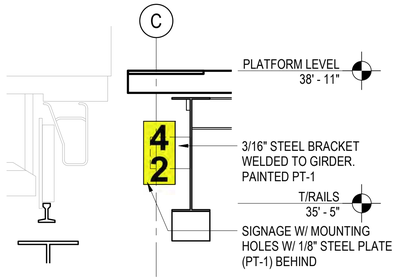

8 ELEVATION - BERTH MARKER
1/2" = 1'-0"

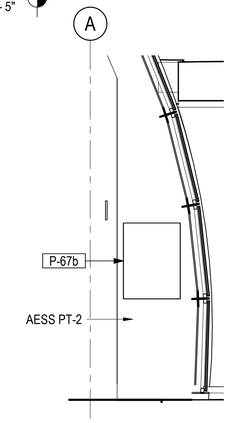

7 ELEVATION - P-67
1/2" = 1'-0"

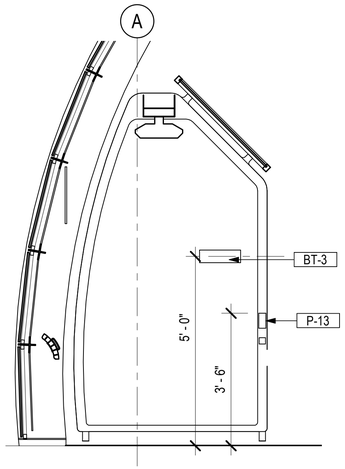

6 ELEVATION - WINDBREAK
1/2" = 1'-0"

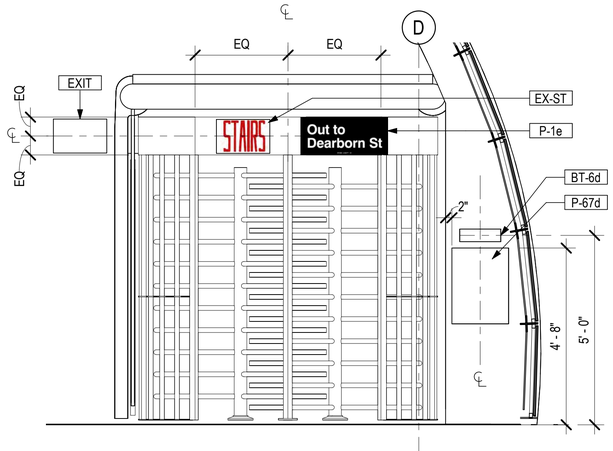

5 ELEVATION - SE EXIT VESTIBULE
1/2" = 1'-0"

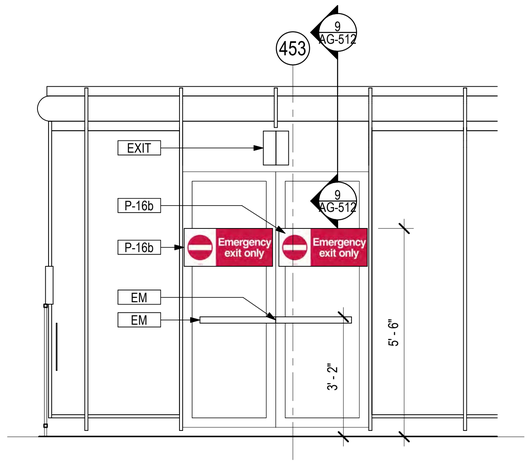

4 ELEVATION - SE EXIT VESTIBULE
1/2" = 1'-0"

3 ELEVATION P-47
1/2" = 1'-0"

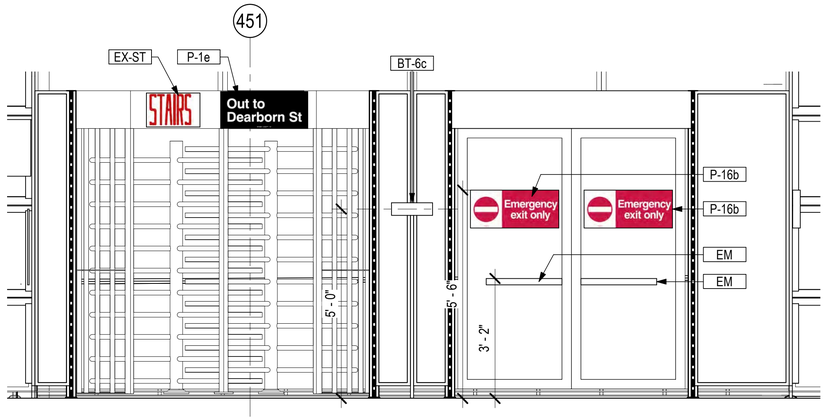

2 ELEVATION - EXIT VESTIBULE TYP
1/2" = 1'-0"

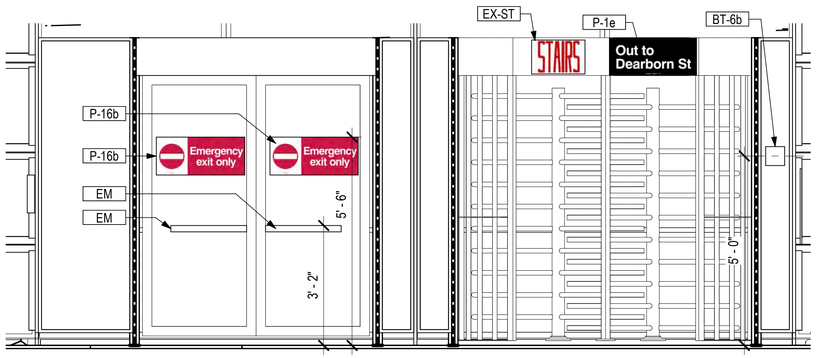

1 ELEVATION - EXIT VESTIBULE NW
1/2" = 1'-0"

DESIGN BY:										
DRAWN BY:		4	7/3/2023	ISSUED FOR BID						
CHECKED BY:										
APPROVED BY:		0	9/9/2022	ISSUED FOR PERMIT	MN	KH	SD			
CDOT/APPROVED BY:		NO.	DATE	REVISIONS	DES.	DRW.	CHK.	DCCO	CDOT	

TRANSYSTEMS
222 SOUTH RIVERSIDE PLAZA SUITE 610
CHICAGO, ILLINOIS 60606

SKIDMORE, OWINGS & MERRILL LLP
224 SOUTH MICHIGAN AVENUE, SUITE 1000
CHICAGO, ILLINOIS 60604

CHICAGO DEPARTMENT OF TRANSPORTATION
DIVISION OF ENGINEERING

STATE / LAKE LOOP ELEVATED STATION
200 NORTH STATE STREET, CHICAGO, IL 60601

ENLARGED PLATFORM LEVEL ELEVATIONS

CDOT PROJECT D-1-209

DATE: 9/9/2022

SPEC. NO.

DRAWING NO. AG-413

REVISION NO.

NOTE: ALL NON-ILLUMINATED SIGNAGE TO HAVE 1/8" STEEL BACKER PLATE, PT-2 THAT IS OFFSET BY 1/4" ON ALL SIDES FROM CTA SIGN. 1/4" RADIUS CORNERS, TYP.

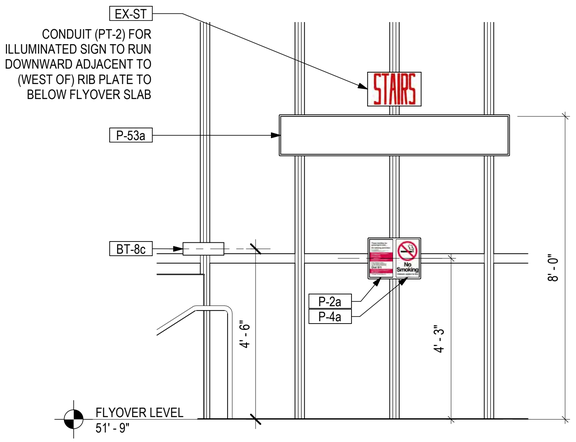

8 ELEVATION - BT-8c
1/2" = 1'-0"

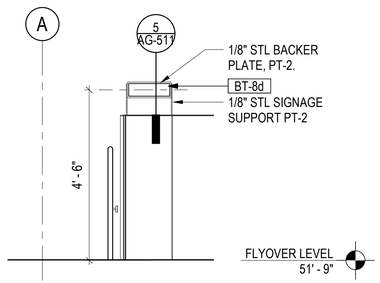

7 ELEVATION - BT-8d
1/2" = 1'-0"

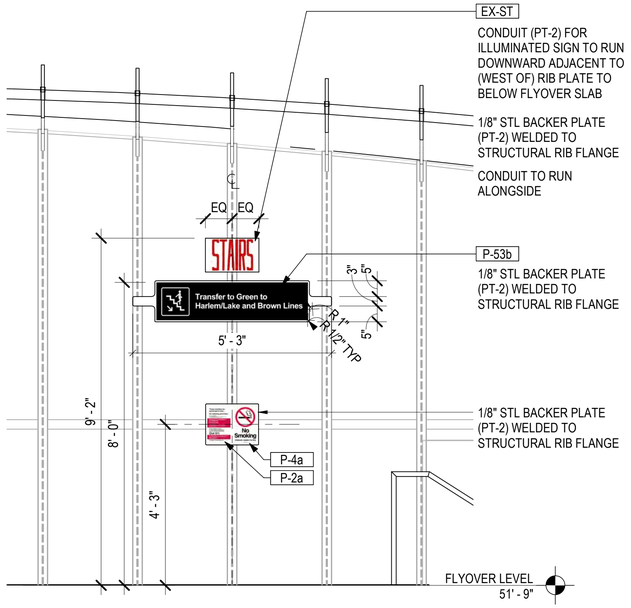

6 ELEVATION - P-49
1/2" = 1'-0"

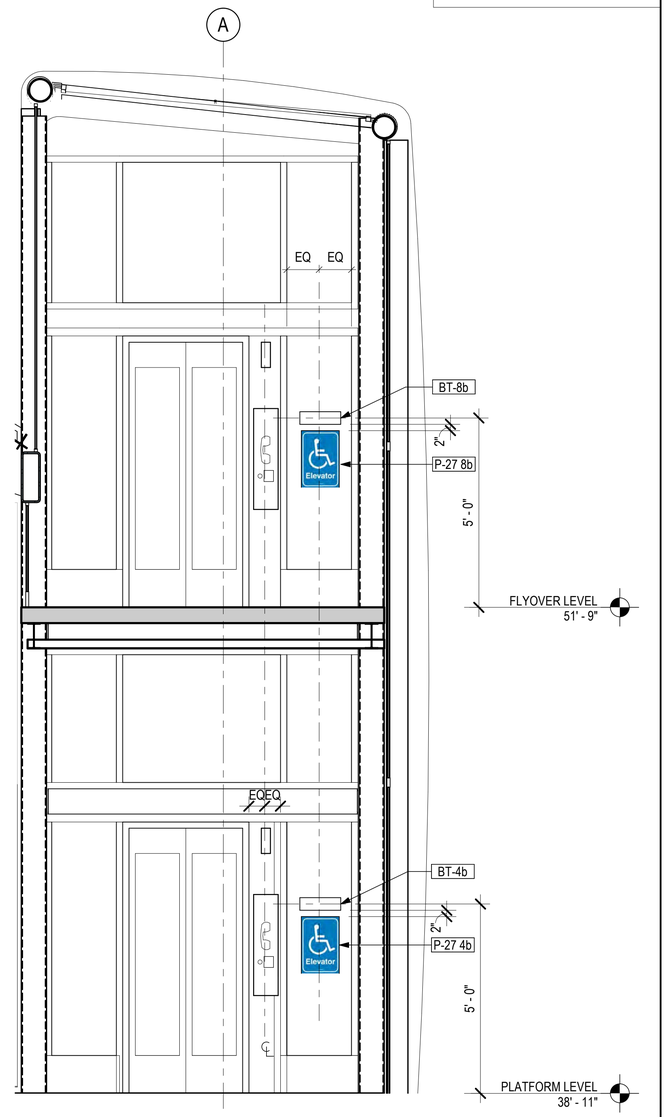

1 ELEVATION - FLYOVER ELEVATOR
1/2" = 1'-0"

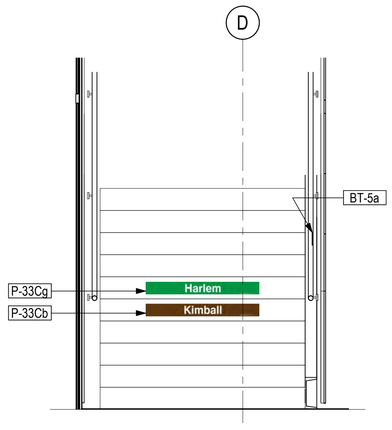

5 ELEVATION - FLYOVER STAIR S
1/2" = 1'-0"

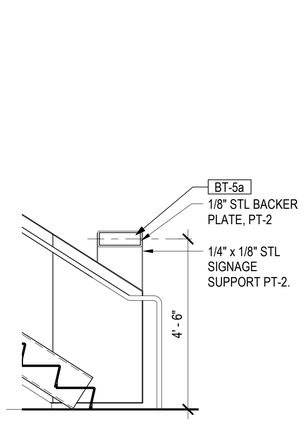

4 ELEVATION - FLYOVER STAIR S
1/2" = 1'-0"

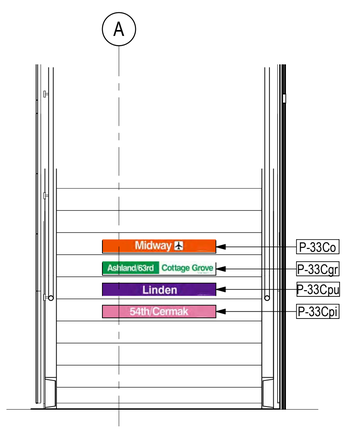

3 ELEVATION - FLYOVER STAIR N
1/2" = 1'-0"

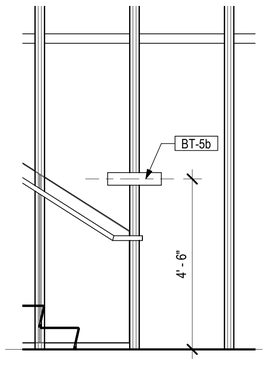

2 ELEVATION - FLYOVER STAIR N
1/2" = 1'-0"

DESIGN BY:										
DRAWN BY:		4	7/3/2023	ISSUED FOR BID						
CHECKED BY:										
APPROVED BY:		0	9/9/2022	ISSUED FOR PERMIT	MN	KH	SD			
CDOT/APPROVED BY:		NO.	DATE	REVISIONS	DES.	DRW.	CHK.	DCCO	CDOT	

TranSystems
TRANSYSTEMS
222 SOUTH RIVERSIDE PLAZA SUITE 610
CHICAGO, ILLINOIS 60606

SOM
SKIDMORE, OWINGS & MERRILL LLP
224 SOUTH MICHIGAN AVENUE, SUITE 1000
CHICAGO, ILLINOIS 60604

CDOT
CHICAGO DEPARTMENT OF TRANSPORTATION
DIVISION OF ENGINEERING

STATE / LAKE LOOP ELEVATED STATION
200 NORTH STATE STREET, CHICAGO, IL 60601

ENLARGED FLYOVER LEVEL ELEVATIONS

CDOT PROJECT D-1-209

DATE: 9/9/2022

SPEC. NO.

DRAWING NO.
AG-414

REVISION NO.

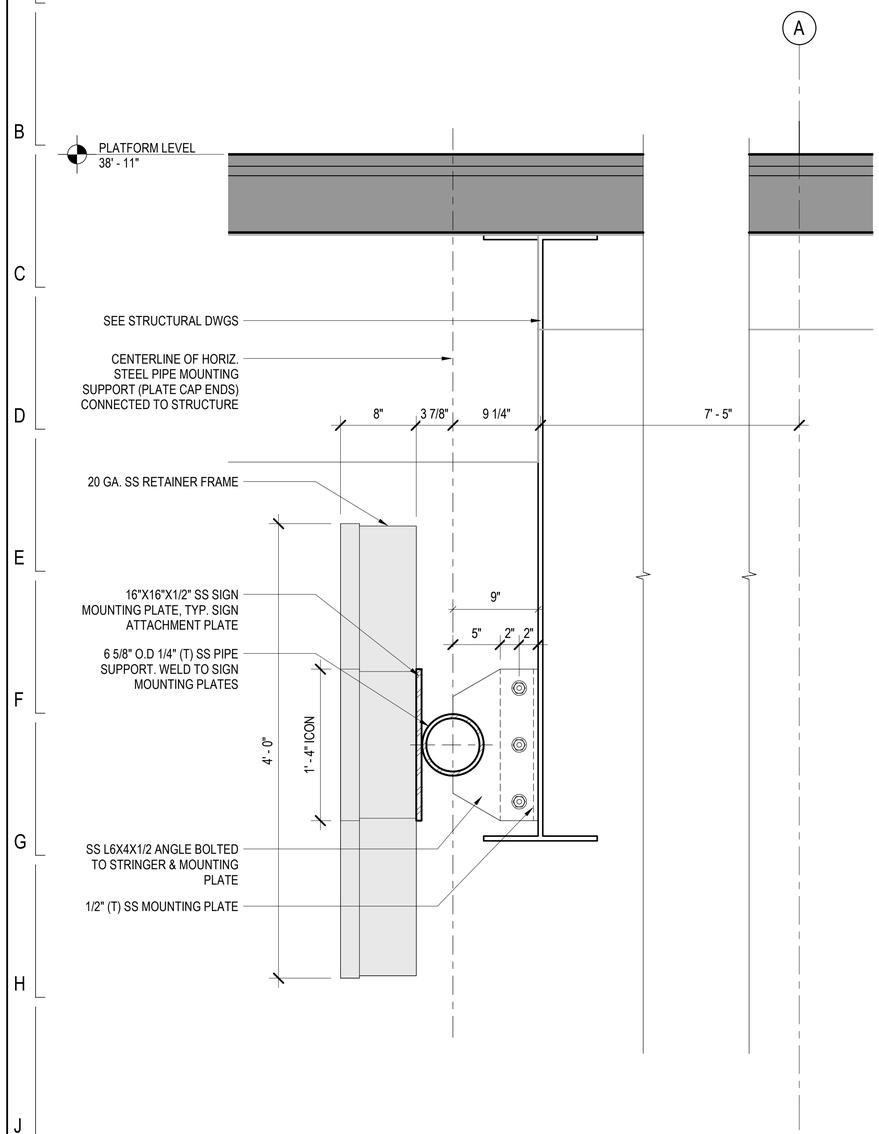

2 SECTION DETAIL - E33

1 1/2" = 1'-0"

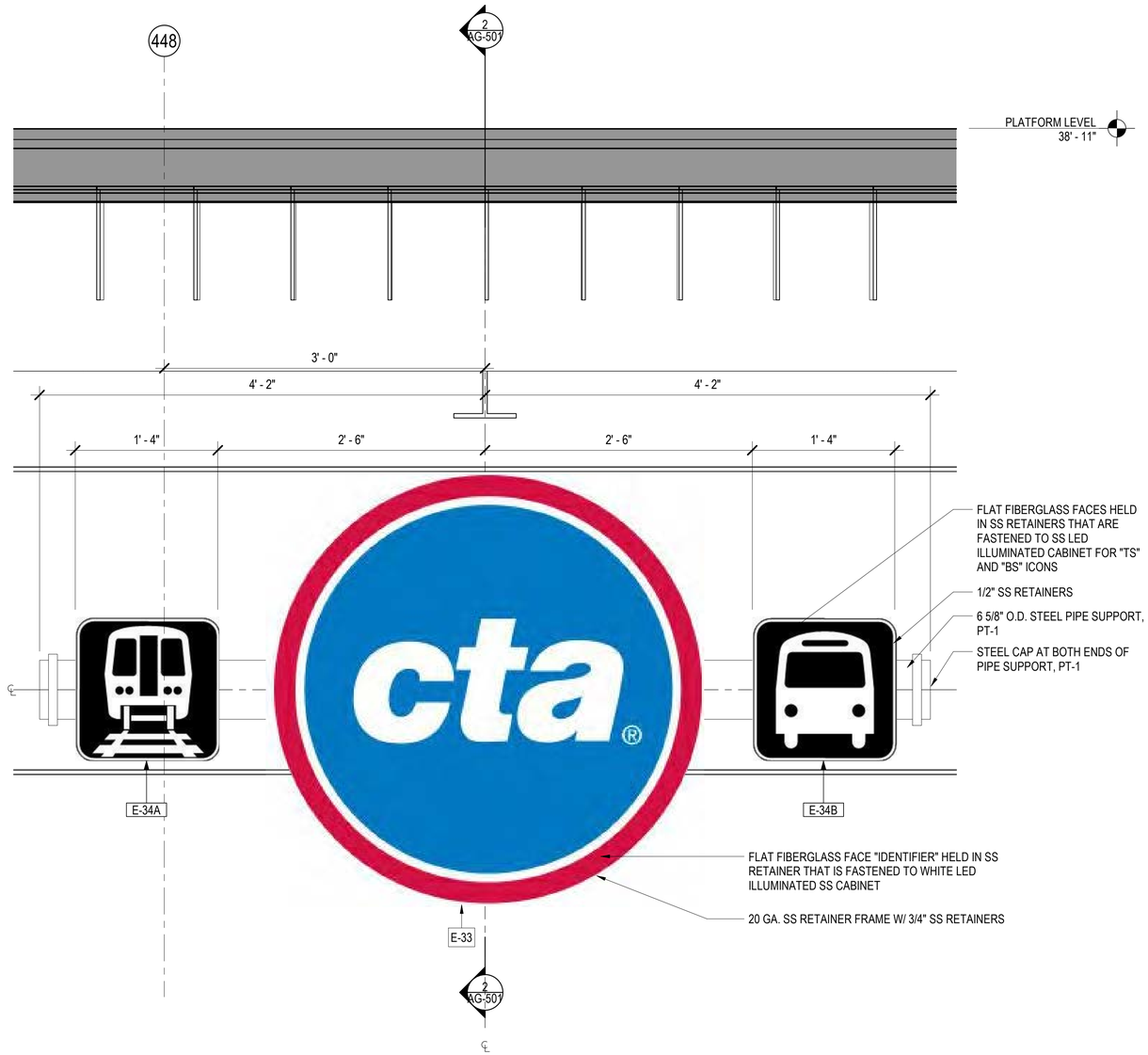

1 ELEVATION DETAIL - E33

1 1/2" = 1'-0"

GENERAL NOTES:

1. E-34A (RAIL ICON) SHOULD BE PLACED ON THE CLOSEST SIDE TO THE ENTRANCE TO THE STATION
2. E-34A & E-34B ICON 16" SQ. SYMBOLS ARE FLAT TRANSLUCENT FIBERGLASS FACES HELD IN SS RETAINERS THAT ARE FASTENED TO SS WHITE LED ILLUMINATED SS CABINET
3. EXACT SIGN POSITION ON VIADUCT TO BE VERIFIED BY CTA
4. CONTRACTOR TO VERIFY ALL DIMENSIONS & CONDITIONS IN THE FIELD AND NOTIFY THE COMMISSIONER OF ANY DISCREPANCIES

DESIGN BY:										
DRAWN BY:		4	7/3/2023	ISSUED FOR BID						
CHECKED BY:										
APPROVED BY:		0	9/9/2022	ISSUED FOR PERMIT	MN	KH	SD			
CDOT/APPROVED BY:		NO.	DATE	REVISIONS	DES.	DRW.	CHK.	DCCO	CDOT	

TRANSYSTEMS
222 SOUTH RIVERSIDE PLAZA SUITE 610
CHICAGO, ILLINOIS 60606

SKIDMORE, OWINGS & MERRILL LLP
224 SOUTH MICHIGAN AVENUE, SUITE 1000
CHICAGO, ILLINOIS 60604

CHICAGO DEPARTMENT OF TRANSPORTATION
DIVISION OF ENGINEERING

STATE / LAKE LOOP ELEVATED STATION
200 NORTH STATE STREET, CHICAGO, IL 60601

SIGNAGE MOUNTING DETAILS

CDOT PROJECT D-1-209

DATE: 9/9/2022

SPEC. NO.

DRAWING NO. AG-501

REVISION NO.

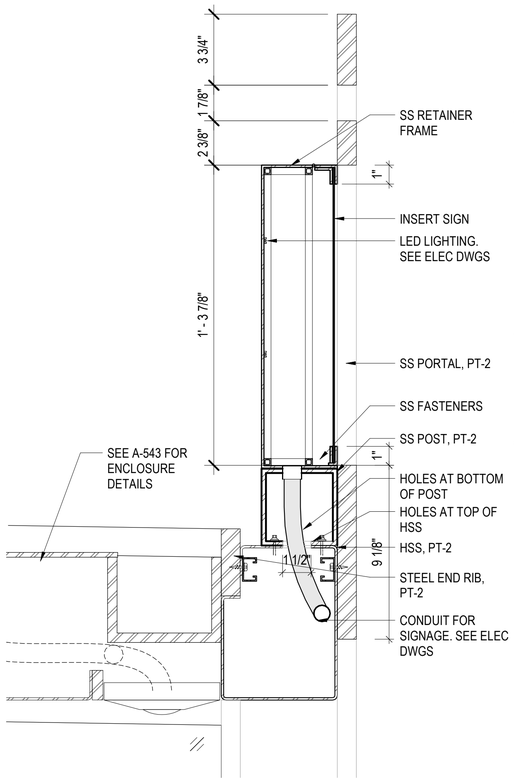

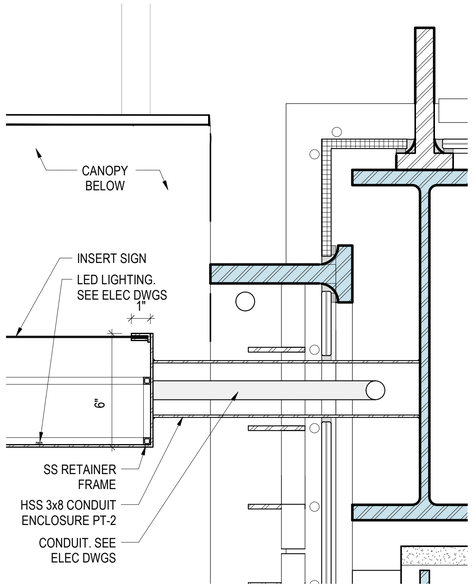

9 **PLAN DETAIL - E-27 WEST**
3" = 1'-0"

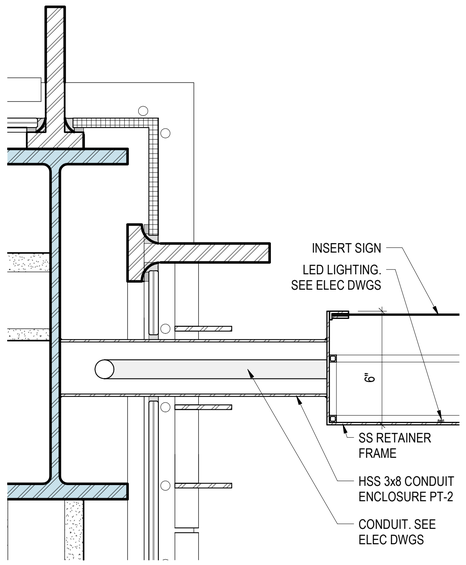

8 **PLAN DETAIL - E-27 EAST**
3" = 1'-0"

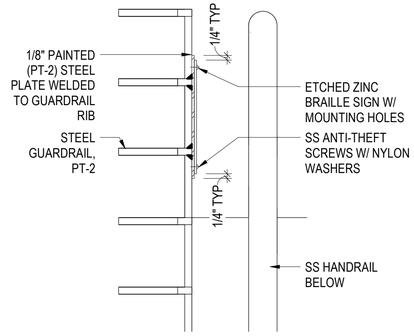

7 **PLAN DETAIL - BT-1 GUARDRAIL**
3" = 1'-0"

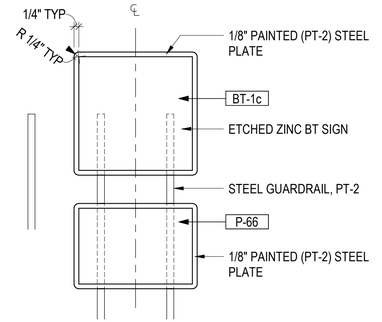

6 **ELEVATION DETAIL - BT-1 - GUARDRAIL**
3" = 1'-0"

10 **SECTION DETAIL - E-25**
3" = 1'-0"

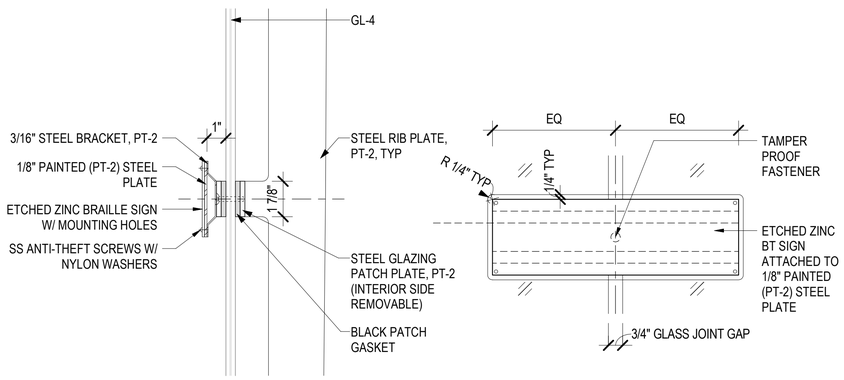

5 **SECTION DETAIL - BT-1EX**
3" = 1'-0"

4 **ELEVATION DETAIL - BT-1EX**
3" = 1'-0"

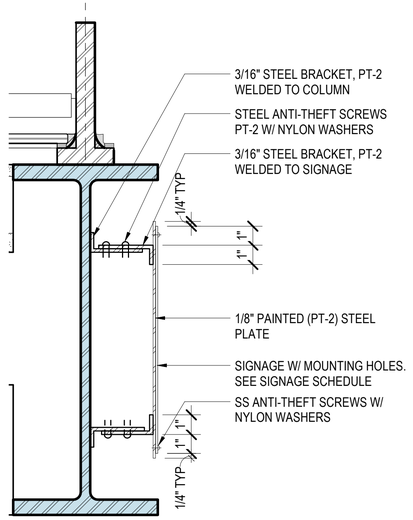

3 **PLAN DETAIL - MOUNTING ON COLUMN**
3" = 1'-0"

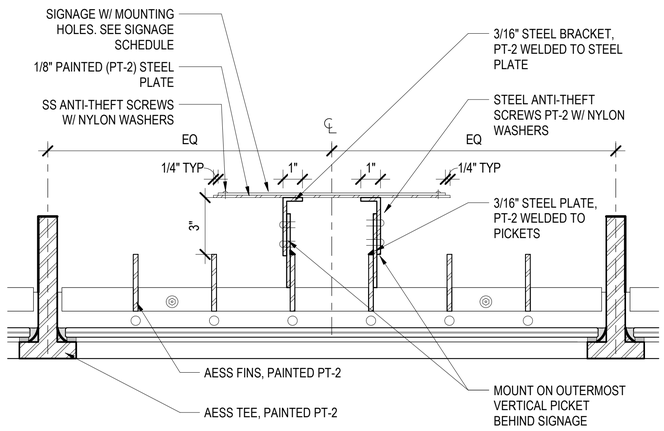

2 **PLAN DETAIL - MOUNTING ON PICKETS**
3" = 1'-0"

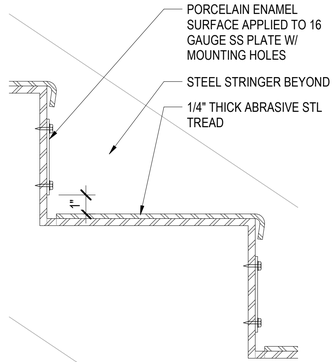

1 **SECTION DETAIL - P-33**
3" = 1'-0"

DESIGN BY:										
DRAWN BY:		4	7/3/2023	ISSUED FOR BID						
CHECKED BY:										
APPROVED BY:		0	9/9/2022	ISSUED FOR PERMIT	MN	KH	SD			
CDOT/APPROVED BY:		NO.	DATE	REVISIONS	DES.	DRW.	CHK.	DCCO	CDOT	

TRANSYSTEMS
222 SOUTH RIVERSIDE PLAZA SUITE 610
CHICAGO, ILLINOIS 60606

SKIDMORE, OWINGS & MERRILL LLP
224 SOUTH MICHIGAN AVENUE, SUITE 1000
CHICAGO, ILLINOIS 60604

CHICAGO DEPARTMENT OF TRANSPORTATION
DIVISION OF ENGINEERING

STATE / LAKE LOOP ELEVATED STATION
200 NORTH STATE STREET, CHICAGO, IL 60601

SPEC. NO.

SIGNAGE MOUNTING DETAILS

DRAWING NO.
AG-502

CDOT PROJECT D-1-209

DATE: 9/9/2022

REVISION NO.

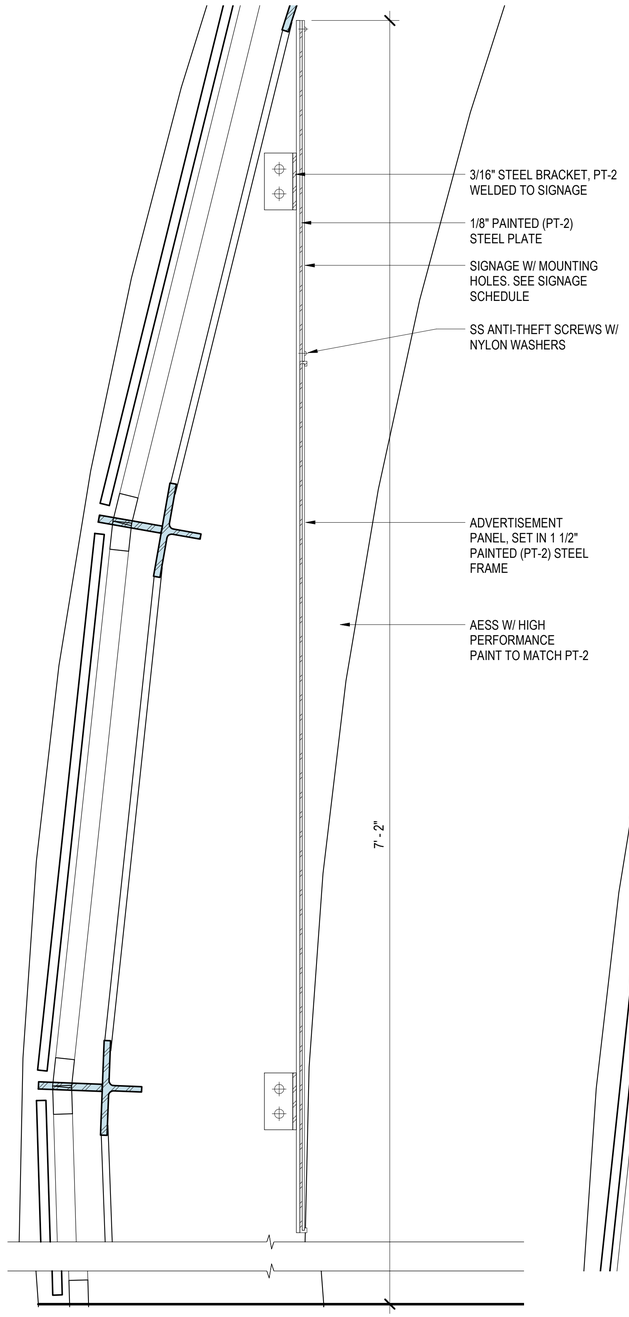

4 SECTION DETAIL - STATION SIGN/AD PANELS
3" = 1'-0"

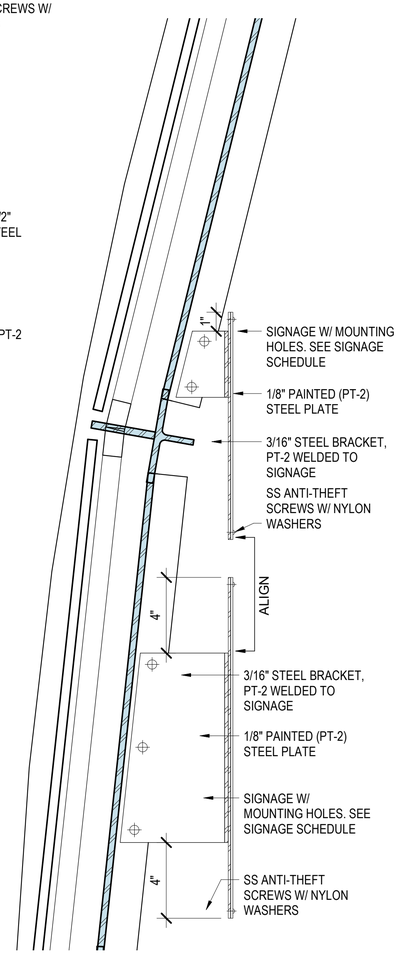

3 SECTION DETAIL - P-8
3" = 1'-0"

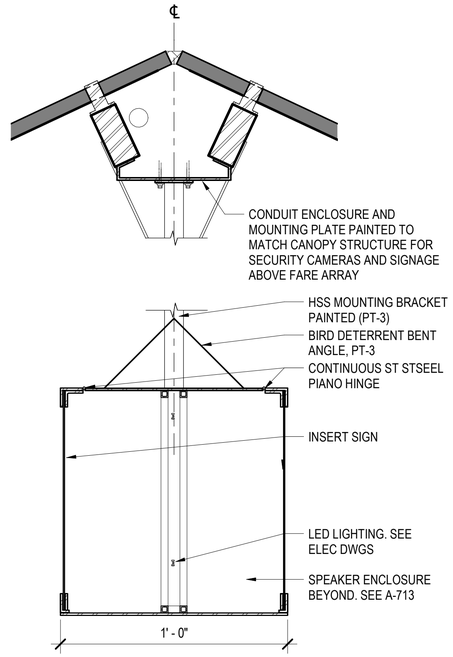

2 SECTION DETAIL - P-61/P-62
3" = 1'-0"

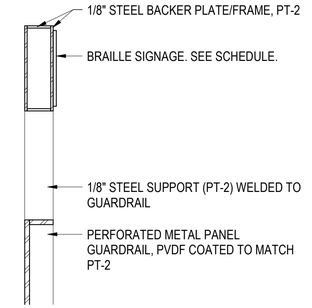

5 SECTION DETAIL - FLYOVER BRAILLE
3" = 1'-0"

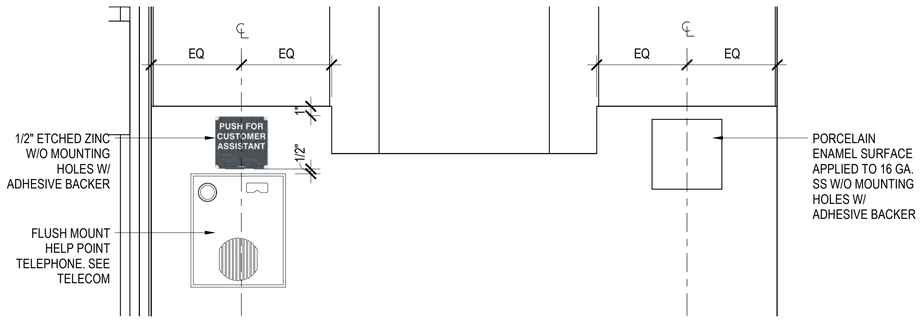

1 ELEVATION DETAIL - CAK
1 1/2" = 1'-0"

DESIGN BY:										
DRAWN BY:		4	7/3/2023	ISSUED FOR BID						
CHECKED BY:										
APPROVED BY:		0	9/9/2022	ISSUED FOR PERMIT	MN	KH	SD			
CDOT/APPROVED BY:		NO.	DATE	REVISIONS	DES.	DRW.	CHK.	DCCO	CDOT	

TRANSYSTEMS
222 SOUTH RIVERSIDE PLAZA SUITE 610
CHICAGO, ILLINOIS 60606

SKIDMORE, OWINGS & MERRILL LLP
224 SOUTH MICHIGAN AVENUE, SUITE 1000
CHICAGO, ILLINOIS 60604

CHICAGO DEPARTMENT OF TRANSPORTATION
DIVISION OF ENGINEERING

STATE / LAKE LOOP ELEVATED STATION
200 NORTH STATE STREET, CHICAGO, IL 60601

SPEC. NO.

SIGNAGE MOUNTING DETAILS

DRAWING NO. AG-511

CDOT PROJECT D-1-209 | DATE: 9/9/2022 | REVISION NO.

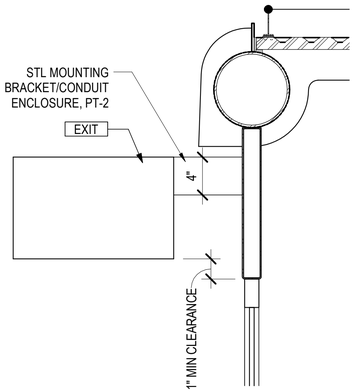

9 SECTION DETAIL - EXIT ~~SIGN~~ @ SE VESTIBULE
1 1/2" = 1'-0"

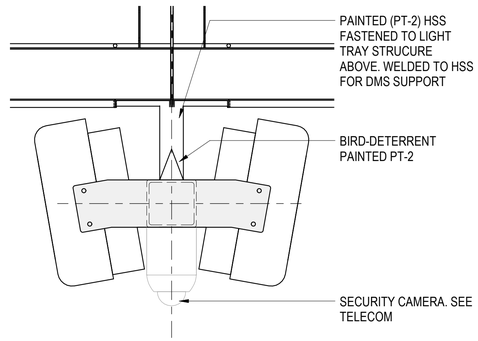

5 ELEVATION - DMS SIDE
1 1/2" = 1'-0"

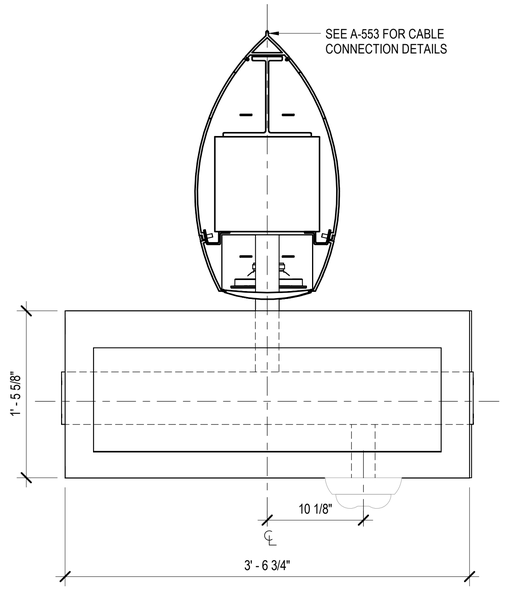

4 ELEVATION - DMS FRONT
1 1/2" = 1'-0"

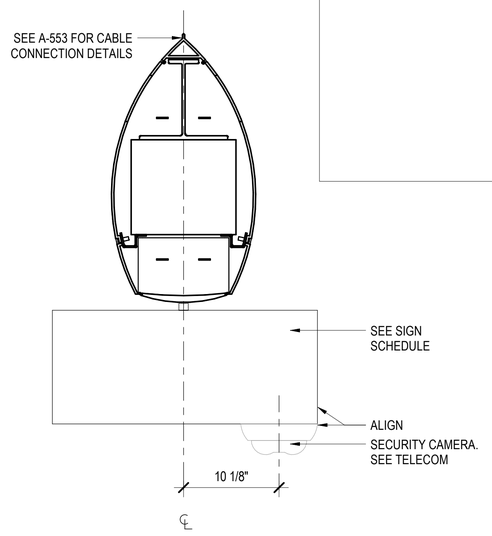

3 ELEVATION - LIGHT TRAY SIGNAGE
1 1/2" = 1'-0"

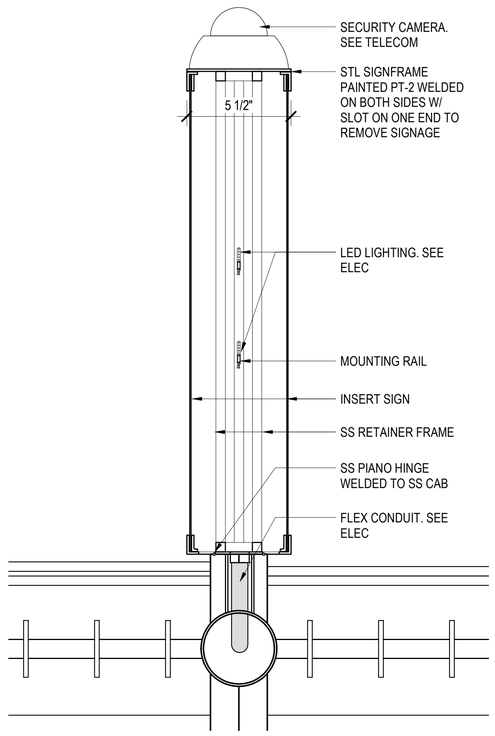

8 PLAN DETAIL - E-22 W/ CAMERA
3" = 1'-0"

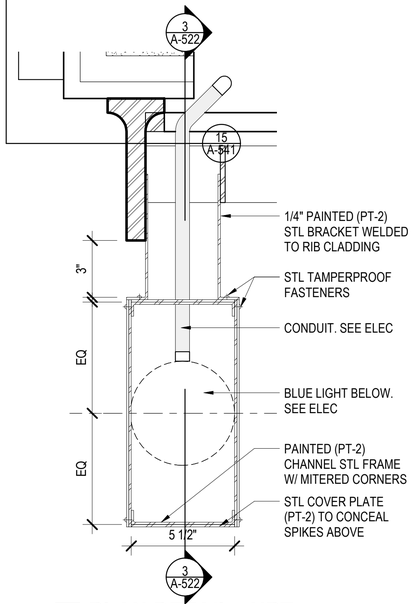

7 PLAN DETAIL - HPT
3" = 1'-0"

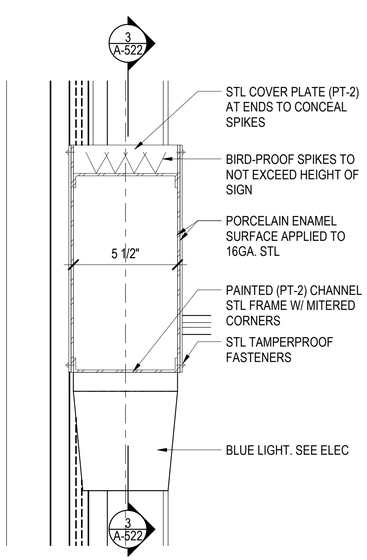

6 SECTION DETAIL - HPT
3" = 1'-0"

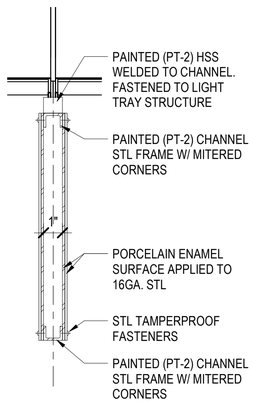

2 SECTION DETAIL - LIGHT TRAY SIGN
3" = 1'-0"

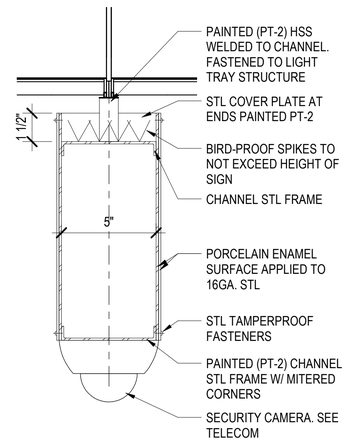

1 SECTION DETAIL - LIGHT TRAY SIGN W/ CAMERA
3" = 1'-0"

DESIGN BY:									
DRAWN BY:		4	7/3/2023	ISSUED FOR BID					
CHECKED BY:									
APPROVED BY:		0	9/9/2022	ISSUED FOR PERMIT	MN	KH	SD		
CDOT/APPROVED BY:		NO.	DATE	REVISIONS	DES.	DRW.	CHK.	DCCO	CDOT

TRANSYSTEMS
222 SOUTH RIVERSIDE PLAZA SUITE 610
CHICAGO, ILLINOIS 60606

SKIDMORE, OWINGS & MERRILL LLP
224 SOUTH MICHIGAN AVENUE, SUITE 1000
CHICAGO, ILLINOIS 60604

CHICAGO DEPARTMENT OF TRANSPORTATION
DIVISION OF ENGINEERING

STATE / LAKE LOOP ELEVATED STATION
200 NORTH STATE STREET, CHICAGO, IL 60601

SPEC. NO.

SIGNAGE MOUNTING DETAILS

DRAWING NO.
AG-512

CDOT PROJECT D-1-209 | DATE: 9/9/2022 | REVISION NO.

SIGNAGE SCHEDULE - NON-ILLUMINATED part 1

SIGN TYPES	DESIGN NUMBER	INSTALLATION LOCATION	SIGN MESSAGE	MOUNTING DETAIL SHEET	GRAPHIC COLOR	BACKGROUND COLOR	DRILLING PATTERN	OVERALL SIGN SIZE	SIGN MATERIAL	SIGN QUANTITY	NOTES
EM	OP	PLATFORM EXIT DOORS	STOP - EMERGENCY EXIT ONLY	AG-413	RED PMS 200	WHITE	-	2"X24"	SELF ADHESIVE	8	
M-2,4	SP-6690 R2	TRACK LEVEL	2, 4	AG-413	BLACK	REFLECTIVE YELLOW	GA	10" x 20"	FIBERGLASS	1	
M-2,4,6	SP-6690 R2	TRACK LEVEL	2, 4, 6	AG-413	BLACK	REFLECTIVE YELLOW	GA	10" x 20"	FIBERGLASS	1	
M-6	SP-6690 R2	TRACK LEVEL	6	AG-413	BLACK	REFLECTIVE YELLOW	GA	10" x 20"	FIBERGLASS	1	
M-8	SP-6690 R2	TRACK LEVEL	8	AG-413	BLACK	REFLECTIVE YELLOW	GA	10" x 20"	FIBERGLASS	2	
P-1e	OP	PLATFORM EXIT ROTOGATES	VARIES	AG-413	VARIOUS	-	-	12"X24"	PORCELAIN	4	
P-2a	OP-5561	STATION & PLATFORM	NO LOITERING PERMITTED	AG-411	BLACK, WHITE, RED PMS 200	WHITE	W	7.375" X 12"	PORCELAIN	6	
P-4a	OP-7708	STATION & PLATFORM	NO SMOKING	AG-411	BLACK, WHITE, RED PMS 200	WHITE	W	7.375" X 12"	PORCELAIN	17	
P-5	SDP-1211-R1	END PLATFORM RAILINGS	DANGER NO ONE PERMITTED	AG-413	BLACK, WHITE, RED PMS 200	WHITE	T	6"X15"	PORCELAIN	4	DO NOT INSTALL ON GATE
P-5a	SDP-1211-R1	END PLATFORM RAILINGS	DANGER NO ONE PERMITTED	AG-413	BLACK, WHITE, RED PMS 200	WHITE	T	6"X15"	PORCELAIN	2	DO NOT INSTALL ON GATE
P-7	SP-6690 R2	TRACK LEVEL	DANGER-KEEP OFF TRACKS	AG-413	VARIOUSBLACK, WHITE, RED PMS 200	WHITE	GA	84" X 12"	FIBERGLASS	20	
P-8a	OP	PLATFORM RIBS	[STATION 1ST LETTER] [STATION NAME] [MIDWAY] [ASHLAND/63RD] [COTTAGE GROVE] [LINDEN [54TH/CERMAK]	AG-511	GRAY, WHITE/LINE COLORS	PMS 425, 172, 355, 267, 204, WHITE	C	12" X 18"	PORCELAIN	10	
P-8b	OP	PLATFORM RIBS	[STATION 1ST LETTER] [STATION NAME] [HARLEM] [KIMBALL]	AG-511	GRAY	PMS 425, 355, 161, WHITE	C	12" X 18"	PORCELAIN	11	
P-9	OP	PLATFORM	[STATION NAME] [STATION COORDINATES]	AG-412	GRAY	PMS 425	JB		PORCELAIN	16	
P-9Tnb	OP	PLATFORM	COLOR LINES	AG-412	GRAY, PMS 172, 355, 267, 204, WHITE	PMS 425	EA	24" X 18"	PORCELAIN	21	
P-9Tsb	OP	PLATFORM	COLOR LINES	AG-412	GRAY, PMS 355, 161, WHITE	PMS 425	EA	24" X 18"	PORCELAIN	12	
P-10Ab	OP	PLATFORM LIGHT TRAY	TERMINAL NAME - BOARD HERE	AG-412/AG-512	WHITE, BLACK	PMS 355, BLACK	L	12"X28"	PORCELAIN	2	
P-10Br	OP	PLATFORM LIGHT TRAY	TERMINAL NAME	AG-412/AG-512	WHITE	PMS 161	L	12"X28"	PORCELAIN	2	
P-10BrBh	OP	PLATFORM LIGHT TRAY	TERMINAL NAME - BOARD HERE	AG-412/AG-512	WHITE, BLACK	PMS 161, BLACK	L	12"X28"	PORCELAIN	2	
P-10g	OP	PLATFORM LIGHT TRAY	TERMINAL NAME - BOARD HERE	AG-412/AG-512	WHITE, BLACK	PMS 355, BLACK	L	12"X28"	PORCELAIN	2	
P-10Gb	OP	PLATFORM LIGHT TRAY	TERMINAL NAME	AG-412/AG-512	WHITE	PMS 355	L	12"X28"	PORCELAIN	2	
P-10GbBh	OP	PLATFORM LIGHT TRAY	TERMINAL NAME - BOARD HERE	AG-412/AG-512	WHITE, BLACK	PMS 355, BLACK	L	12"X28"	PORCELAIN	2	
P-10gBh	OP	PLATFORM LIGHT TRAY	TERMINAL NAME	AG-412/AG-512	WHITE	PMS 355	L	12"X28"	PORCELAIN	2	
P-10o	OP	PLATFORM LIGHT TRAY	TERMINAL NAME - BOARD HERE	AG-412/AG-512	WHITE, BLACK	PMS 172, BLACK	L	12"X28"	PORCELAIN	2	
P-10oBh	OP	PLATFORM LIGHT TRAY	TERMINAL NAME	AG-412/AG-512	WHITE	PMS 172, BLACK	L	12"X28"	PORCELAIN	2	
P-10pi	OP	PLATFORM LIGHT TRAY	TERMINAL NAME - BOARD HERE	AG-412/AG-512	WHITE, BLACK	PMS 204, BLACK	L	12"X28"	PORCELAIN	2	
P-10piBh	OP	PLATFORM LIGHT TRAY	TERMINAL NAME	AG-412/AG-512	WHITE	PMS 204	L	12"X28"	PORCELAIN	2	
P-10pu	OP	PLATFORM LIGHT TRAY	TERMINAL NAME - BOARD HERE	AG-412/AG-512	WHITE, BLACK	PMS 267, BLACK	L	12"X28"	PORCELAIN	2	
P-10puBh	OP	PLATFORM LIGHT TRAY	TERMINAL NAME	AG-412/AG-512	WHITE	PMS 267	L	12"X28"	PORCELAIN	2	
P-11	SDP-1216-R1	STREET, STATION & PLATFORM	AUTHORIZED PERSONNEL ONLY	AG-402	WHITE	BLACK	VHB TAPE	12"x4"	FIBERGLASS	25	NO DRILLING GROMMETS
P-13	OP-3515/3519	PLATFORM WINDBREAK	HEAT AVAILABLE	AG-413	WHITE	BLACK	VHB TAPE	2.25 X 4.75	FIBERGLASS	3	NO DRILLING GROMMETS
P-14a	OP-7362	STATION & PLATFORM	HOLD ON TO YOUR CHILDREN	AG-411	YELLOW, RED, PMS 200, BLACK, WHITE	YELLOW	W	7.375" X 12"	PORCELAIN	2	
P-14b	OP-7362	STATION & PLATFORM	HOLD ON TO YOUR CHILDREN	AG-411	YELLOW, RED, PMS 200, BLACK, WHITE	YELLOW	W	TURNSTILE STICKER	PORCELAIN	28	
P-15a	OP-7368	PLATFORM	STAY ON PLATFORM	AG-411	VARIOUS	YELLOW	W	7.375" X 12"	PORCELAIN	2	
P-16b	OP-10130	PLATFORM EXIT DOORS	STOP - EMERGENCY EXIT ONLY	AG-413	RED PMS 200	WHITE	-	12"X28"	PORCELAIN	8	
P-17	OP-5743-R2	STATION & PLATFORM	CUSTOMER ALERT	AG-411	BLACK	STAINLESS STEEL	VHB TAPE	19.25" X 27.5"	ST. STL.	8	
P-19	FE-7861	STATION & PLATFORM	RAIL TRANSIT SYSTEM MAP	AG-412	VARIOUS	WHITE	-	27" X 40"	DIGITAL OUTPUT	8	
P-20-6	OP-8450	CANOPY STREET STAIR	STOP! NO ENTRY	AG-402	VARIOUS	WHITE	SIGN BOX	60"X16"	PORCELAIN	4	
P-27 4a	OP-2669	ELEVATOR	ADA ELEVATOR	AG-402/AG-414	WHITE	PMS 300	VHB TAPE	12" x 18"	PORCELAIN	6	NO DRILLING GROMMETS
P-27 4b	OP-2669	ELEVATOR	ADA ELEVATOR	AG-402/AG-414	WHITE	PMS 300	VHB TAPE	12" x 18"	PORCELAIN	1	NO DRILLING GROMMETS
P-27 8a	OP-2669	ELEVATOR	ADA ELEVATOR	AG-402/AG-414	WHITE	PMS 300	VHB TAPE	12" x 18"	PORCELAIN	1	NO DRILLING GROMMETS
P-27 8b	OP-2669	ELEVATOR	ADA ELEVATOR	AG-402/AG-414	WHITE	PMS 300	VHB TAPE	12" x 18"	PORCELAIN	1	NO DRILLING GROMMETS
P-27a	OP-2669	ELEVATOR	ADA ELEVATOR	AG-402/AG-414	WHITE	PMS 300		12" x 18"	PORCELAIN	4	
P-33ab1	OP	FEATURE STAIR RISERS	[TBD]	AG-401/AG-413	WHITE	[TBD]	J	36" X 4"	PORCELAIN	2	
P-33ab2	OP	FEATURE STAIR RISERS	[TBD]	AG-401/AG-413	WHITE	[TBD]	J	36" X 4"	PORCELAIN	2	
P-33Cb	OP	FEATURE STAIR RISERS	[KIMBALL]	AG-401/AG-413	WHITE	BROWN	J	36" X 4"	PORCELAIN	3	
P-33Cg	OP	FEATURE STAIR RISERS	[HARLEM/LAKE]	AG-401/AG-413	WHITE	GREEN	J	36" X 4"	PORCELAIN	3	
P-33Cgr	OP	FEATURE STAIR RISERS	[COTTAGE GROVE] [ASHLAND/63RD]	AG-401/AG-413	GREEN, WHITE	WHITE, GREEN	J	36" X 4"	PORCELAIN	3	
P-33Co	OP	FEATURE STAIR RISERS	[MIDWAY]	AG-401/AG-413	WHITE	ORANGE	J	36" X 4"	PORCELAIN	3	
P-33Cpi	OP	FEATURE STAIR RISERS	[54TH/CERMAK]	AG-401/AG-413	WHITE	PINK	J	36" X 4"	PORCELAIN	3	
P-33Cpu	OP	FEATURE STAIR RISERS	[LINDEN]	AG-401/AG-413	WHITE	PURPLE	J	36" X 4"	PORCELAIN	3	
P-33ex	OP	EXIT STAIR RISERS	STOP NO ENTRY	AG-402	WHITE	RED	J	36" X 4"	PORCELAIN	12	
P-35-2		POSTER INNER LOOP PLATFORM	TRANSIT INFORMATION	AG-412	-	STAINLESS STEEL	CUSTOM	122.5" X 50"	ST. STL.	4	
P-35-4		POSTER INNER LOOP PLATFORM	TRANSIT INFORMATION	AG-412	-	STAINLESS STEEL	CUSTOM	182.5" X 50"	ST. STL.	4	
P-35br	OP	STATION & PLATFORM	[BROWN LINE TIMETABLE]	AG-412	VARIOUS	WHITE	-	27"x40"	DIGITAL OUTPUT	4	
P-35gr	OP	STATION & PLATFORM	[GREEN LINE TIMETABLE]	AG-412	VARIOUS	WHITE	-	27"x40"	DIGITAL OUTPUT	8	
P-35or	OP	STATION & PLATFORM	[ORANGE LINE TIMETABLE]	AG-412	VARIOUS	WHITE	-	27"x40"	DIGITAL OUTPUT	4	
P-35pi	OP	STATION & PLATFORM	[PINK LINE TIMETABLE]	AG-412	VARIOUS	WHITE	-	27"x40"	DIGITAL OUTPUT	4	
P-35pu	OP	STATION & PLATFORM	[PURPLE LINE TIMETABLE]	AG-412	VARIOUS	WHITE	-	27"x40"	DIGITAL OUTPUT	4	

DESIGN BY:									
DRAWN BY:		4	7/3/2023	ISSUED FOR BID					
CHECKED BY:									
APPROVED BY:		0	9/9/2022	ISSUED FOR PERMIT	MN	KH	SD		
CDOT/APPROVED BY:		NO.	DATE	REVISIONS	DES.	DRW.	CHK.	DCCO	CDOT

TRANSYSTEMS
222 SOUTH RIVERSIDE PLAZA SUITE 610
CHICAGO, ILLINOIS 60606

SKIDMORE, OWINGS & MERRILL LLP
224 SOUTH MICHIGAN AVENUE, SUITE 1000
CHICAGO, ILLINOIS 60604

CHICAGO DEPARTMENT OF TRANSPORTATION
DIVISION OF ENGINEERING

STATE / LAKE LOOP ELEVATED STATION
200 NORTH STATE STREET, CHICAGO, IL 60601

SPEC. NO.

SIGNAGE SCHEDULES

DRAWING NO.
AG-601

CDOT PROJECT D-1-209 | DATE: 9/9/2022 | REVISION NO.

SIGNAGE SCHEDULE - NON-ILLUMINATED part 2

SIGN TYPES	DESIGN NUMBER	INSTALLATION LOCATION	SIGN MESSAGE	MOUNTING DETAIL SHEET	GRAPHIC COLOR	BACKGROUND COLOR	DRILLING PATTERN	OVERALL SIGN SIZE	SIGN MATERIAL	SIGN QUANTITY	NOTES
P-42		EAST FEATURE STAIRS	ACCESSIBLE ENTRANCE ACROSS STREET	AG-401	WHITE	PMS 300	B	12" x 18"	PORCELAIN	2	
P-43	OP-9011	STATION & PLATFORM	SURVEILLANCE CAMERAS	AG-411	RED PMS 200	WHITE	W	7.375" X 12"	PORCELAIN	4	
P-44	OP-8989	PLATFORM	DO NOT FEED BIRDS	AG-411	VARIOUS	WHITE	B	7.375" X 12"	PORCELAIN	2	
P-46	OP	FEATURE STAIR CANOPY	VARIES	AG-411	VARIOUS	-	-	12"X48"	PORCELAIN	5	
P-47a	OP	PLATFORM	EXIT PATH INFO	AG-413	WHITE	BLACK	AA	18" x 119"	PORCELAIN	4	
P-47b	OP	PLATFORM	EXIT PATH INFO	AG-413	WHITE	BLACK	AA	18" x 119"	PORCELAIN	6	
P-53a		FLYOVER	Transfer to Orange, Green, Purple and Pink Lines	AG-414	WHITE	BLACK	BA	12" x 72"	PORCELAIN	1	NO DRILLING GROMMETS
P-53b		FLYOVER	Transfer to Green to Harlem/Lake and Brown Lines	AG-414	WHITE	BLACK	AA	12" x 48"	PORCELAIN	1	NO DRILLING GROMMETS
P-63	OP	STATION	FARES & TICKETS	AG-411	WHITE	BLACK	BA	72" X 12"	PORCELAIN	2	
P-64	OP	CAK	CUSTOMER SERVICE MESSAGE	AG-511	VARIOUS	WHITE	VHB TAPE	7 3/8" x 7 3/8"	PORCELAIN	2	NO DRILLING GROMMETS
P-65e		BENT COLUMN	RED LINE	AG-402				TBD	PORCELAIN	2	NO DRILLING GROMMETS
P-65w		BENT COLUMN	RED LINE	AG-402				TBD	PORCELAIN	2	NO DRILLING GROMMETS
P-66		STREET, STATION & PLATFORM	CONCEAL CARRY	AG-401/AG-402	WHITE	BLACK	VHB TAPE	6"x4"	FIBERGLASS	8	
P-67a	OP	EXIT VESTIBULES	NARROW EXIT	AG-413	VARIOUS	WHITE		18" X 24"	PORCELAIN	1	
P-67b	OP	EXIT VESTIBULES	NARROW EXIT	AG-413	VARIOUS	WHITE		18" X 24"	PORCELAIN	1	
P-67c	OP	EXIT VESTIBULES	NARROW EXIT	AG-413	VARIOUS	WHITE		18" X 24"	PORCELAIN	1	
P-67d	OP	EXIT VESTIBULES	NARROW EXIT	AG-413	VARIOUS	WHITE		18" X 24"	PORCELAIN	1	
P-68		HIGH BARRIER GATE	RULES OF CONDUCT	AG-411	VARIOUS	WHITE	-	12"X28"	ALPINA FRAME	4	
P-74	OP	STATION	DIRECTIONAL MAP SIGN	AG-412	VARIOUS	WHITE	R	24" X 48"	PORCELAIN	12	
P-74B1	FE-7861 R1	STATION & PLATFORM	-	AG-412	-	STAINLESS STEEL	CUSTOM	96" X 60"	ST. STL.	2	
P-74B2	FE-7861 R1	STATION & PLATFORM	-	AG-412	-	STAINLESS STEEL	CUSTOM	60" X 48"	ST. STL.	2	
P-74H	OP	STATION & PLATFORM	LINE NAME	AG-412	VARIOUS	WHITE	H	24" X 12"	PORCELAIN	12	
P-76		HIGH BARRIER GATE	ELEVATOR STATUS BOARD	AG-411	VARIOUS	WHITE	-	27" X 40"	DRY ERASE	2	
P-80	OP-7708	STATION & PLATFORM		AG-411	BLACK, WHITE, RED PMS 200	WHITE	W	7.375" X 12"	PORCELAIN	2	
P-81		PLATFORM	HELP POINT PHONE	AG-412/AG-512	-	STAINLESS STEEL	FLAG MOUNTED	12" X 12"	ST. STL.	2	DOUBLE SIDED
P-82		POSTER INNER LOOP PLATFORM	i	AG-412	-	STAINLESS STEEL	CUSTOM	12" X 12"	ST. STL.	4	
P-X	FE-7861	STATION & PLATFORM	DOWNTOWN SIGHTSEEING	AG-412	VARIOUS	WHITE	-	27" X 40"	DIGITAL OUTPUT	8	
P-XX		STREET LEVEL ABUTMENT	COLOR LINES	AG-401	WHITE	PMS 300	B	X" x X"	PORCELAIN	4	

DESIGN BY:										
DRAWN BY:		4	7/3/2023	ISSUED FOR BID						
CHECKED BY:										
APPROVED BY:		0	9/9/2022	ISSUED FOR PERMIT	MN	KH	SD			
CDOT/APPROVED BY:		NO.	DATE	REVISIONS	DES.	DRW.	CHK.	DCCO	CDOT	

TRANSYSTEMS
222 SOUTH RIVERSIDE PLAZA SUITE 610
CHICAGO, ILLINOIS 60606

SKIDMORE, OWINGS & MERRILL LLP
224 SOUTH MICHIGAN AVENUE, SUITE 1000
CHICAGO, ILLINOIS 60604

CHICAGO DEPARTMENT OF TRANSPORTATION
DIVISION OF ENGINEERING

STATE / LAKE LOOP ELEVATED STATION
200 NORTH STATE STREET, CHICAGO, IL 60601

SIGNAGE SCHEDULES

CDOT PROJECT D-1-209

DATE: 9/9/2022

SPEC. NO.

DRAWING NO. AG-602

REVISION NO.

SIGNAGE SCHEDULE - ILLUMINATED

SIGN TYPES	DESIGN NUMBER	INSTALLATION LOCATION	SIGN MESSAGE	MOUNTING DETAIL SHEET	GRAPHIC COLOR	BACKGROUND COLOR	DRILLING PATTERN	OVERALL SIGN SIZE	SIGN MATERIAL	SIGN QUANTITY	NOTES
DMS-1	ELEC.	PLATFORM	VARIES	AG-512	TRI-COLOR L.E.D.	BLACK	-	43.189"x17.165"	ELECTRONIC DISPLAY	16	
E-16	OP	PLATFORM	VARIES	AG-512	WHITE	BLACK	SIGN BOX	15" X 37.5"	FIBERGLASS	12	
E-19/P-61	OP	ABOVE FARE ARRAY	ENTER HERE FOR TRAINS	AG-511	WHITE	BLACK	CA	96" X 12"	PORCELAIN	2	
E-19/P-62	OP	ABOVE FARE ARRAY	OUT TO STREET AND BUSES	AG-511	WHITE	BLACK	CA	96" X 12"	PORCELAIN	2	
E-22	OP	PLATFORM AND STREET	ELEVATOR	AG-512	WHITE	BLACK	SIGN BOX	15" X 25.5"	FIBERGLASS	16	
E-27a	OP-8450	STREET FEATURE STAIR	STATION NAME	AG-401/AG-502	VARIOUS	WHITE	SIGN BOX	60"X16"	FIBERGLASS	3	
E-27a2	OP-8450	ELEVATOR AT STREET	STATION NAME	A-521	VARIOUS	WHITE	SIGN BOX	78"X16"	FIBERGLASS	1	
E-27b	OP	STREET FEATURE STAIR	STATION NAME	AG-401/AG-502	VARIOUS	WHITE	SIGN BOX	60"X16"	FIBERGLASS	3	
E-27b2	OP	ELEVATOR AT STREET	STATION NAME	A-521	VARIOUS	WHITE	SIGN BOX	78"X16"	FIBERGLASS	1	
E-33	OP	IDENTIFIER	CTA LOGO	AG-501	WHITE	WHITE	SIGN BOX	48" DIAMETER	FIBERGLASS	2	
E-34A	ELEC.	IDENTIFIER	TRAIN ICON	AG-501	WHITE	BLACK	SIGN BOX	16" X 16"	FIBERGLASS	2	
E-34B	ELEC.	IDENTIFIER	BUS ICON	AG-501	WHITE	BLACK	SIGN BOX	16"x16"	FIBERGLASS	2	
EX-ST	ELEC.	PLATFORM ROTOGATES	STAIRS	AG-413	RED	WHITE	SIGN BOX	21.25"x10.75"	FIBERGLASS	10	
EXIT	ELEC.	STATION & PLATFORM	EXIT	AG-512	RED	WHITE	SIGN BOX	21.25"x10.75"	FIBERGLASS	12	
T-1	ELEC.	PLATFORM - FLOOR MOUNTED	inXTouch Screen	AG-411	TRI-COLOR L.E.D.	BLACK	-	57.48"X83"	ELECTRONIC DISPLAY	4	
T-1H	ELEC.	STREET LEVEL	TITAN SIGN FOR ADVERTISEMENT	AG-402	TRI-COLOR L.E.D.	BLACK	-	57.48"X83"	ELECTRONIC DISPLAY	4	

SIGNAGE SCHEDULE - BRAILLE

SIGN TYPES	DESIGN NUMBER	INSTALLATION LOCATION	SIGN MESSAGE	MOUNTING DETAIL SHEET	GRAPHIC COLOR	BACKGROUND COLOR	DRILLING PATTERN	OVERALL SIGN SIZE	SIGN MATERIAL	SIGN QUANTITY	NOTES
BT-1a		STREET LEVEL FEATURE STAIRS	ENTRANCE	AG-502	WHITE	PMS 425	ACCORDING TO ARTWORK	6"X6"	ZINC ETCHED	2	
BT-1b		STREET LEVEL ELEVATOR	ENTRANCE	AG-502	WHITE	PMS 425	ACCORDING TO ARTWORK	4"X13"	ZINC ETCHED	1	
BT-1c		STREET LEVEL FEATURE STAIRS	ENTRANCE	AG-502	WHITE	PMS 425	ACCORDING TO ARTWORK	6"X6"	ZINC ETCHED	2	
BT-1d		STREET LEVEL ELEVATOR	ENTRANCE	AG-502	WHITE	PMS 425	ACCORDING TO ARTWORK	4"X13"	ZINC ETCHED	1	
BT-1e		STREET LEVEL ESCALATOR	ENTRANCE	AG-402/AG-502	WHITE	PMS 425	ACCORDING TO ARTWORK	4"X13"	ZINC ETCHED	1	
BT-1ex-ee		STREET LEVEL EXIT STAIRS	DO NOT ENTER	AG-402/AG-502	WHITE	PMS 425	ACCORDING TO ARTWORK	4"X13"	ZINC ETCHED	3	
BT-1f		STREET LEVEL ESCALATOR	ENTRANCE	AG-402/AG-502	WHITE	PMS 425	ACCORDING TO ARTWORK	4"X13"	ZINC ETCHED	1	
BT-2		PLATFORM WINDBREAK	SOUTHBOUND	AG-413	WHITE	PMS 425	VHB TAPE	4"X13"	ZINC ETCHED	4	
BT-3		PLATFORM WINDBREAK	NORTHBOUND	AG-413	WHITE	PMS 425	VHB TAPE	4"X13"	ZINC ETCHED	2	
BT-4a		PLATFORM ELEVATOR		AG-402/AG-414	WHITE	PMS 425	VHB TAPE	4"X13"	ZINC ETCHED	1	
BT-4b		PLATFORM ELEVATOR		AG-402/AG-414	WHITE	PMS 425	VHB TAPE	4"X13"	ZINC ETCHED	1	
BT-4c		PLATFORM ELEVATOR		AG-402/AG-414	WHITE	PMS 425	VHB TAPE	4"X13"	ZINC ETCHED	1	
BT-4d		PLATFORM ELEVATOR		AG-402/AG-414	WHITE	PMS 425	VHB TAPE	4"X13"	ZINC ETCHED	1	
BT-5a		PLATFORM LEVEL FLYOVER STAIRS		AG-413	WHITE	PMS 425	VHB TAPE	4"X13"	ZINC ETCHED	1	NO DRILLING GROMMETS
BT-5b		PLATFORM LEVEL FLYOVER STAIRS		AG-413	WHITE	PMS 425	VHB TAPE	4"X13"	ZINC ETCHED	1	NO DRILLING GROMMETS
BT-5c		PLATFORM LEVEL FEATURE STAIRS		AG-411	WHITE	PMS 425	VHB TAPE	4"X16"	ZINC ETCHED	1	
BT-5d		PLATFORM LEVEL FEATURE STAIRS		AG-411	WHITE	PMS 425	VHB TAPE	4"X13"	ZINC ETCHED	1	
BT-5e		PLATFORM LEVEL FEATURE STAIRS		AG-411	WHITE	PMS 425	ACCORDING TO ARTWORK	4"X13"	ZINC ETCHED	1	
BT-5f		PLATFORM LEVEL FEATURE STAIRS		AG-411	WHITE	PMS 425	VHB TAPE	4"X13"	ZINC ETCHED	1	
BT-6a		PLATFORM LEVEL EXIT STAIRS		AG-413	WHITE	PMS 425	ACCORDING TO ARTWORK	4"X13"	ZINC ETCHED	1	
BT-6b		PLATFORM LEVEL EXIT STAIRS		AG-413	WHITE	PMS 425	VHB TAPE W/ BACKER PLATE	6"X6"	ZINC ETCHED	1	
BT-6c		PLATFORM LEVEL EXIT STAIRS		AG-413	WHITE	PMS 425	ACCORDING TO ARTWORK	4"X13"	ZINC ETCHED	1	
BT-6d		PLATFORM LEVEL EXIT STAIRS		AG-413	WHITE	PMS 425	ACCORDING TO ARTWORK	4"X13"	ZINC ETCHED	1	
BT-7		PLATFORM LEVEL ESCALATORS		AG-412	WHITE	PMS 425	ACCORDING TO ARTWORK	4"X13"	ZINC ETCHED	2	
BT-8a		FLYOVER LEVEL ELEVATOR		AG-414	WHITE	PMS 425	ACCORDING TO ARTWORK	4"X13"	ZINC ETCHED	1	NO DRILLING GROMMETS
BT-8b		FLYOVER LEVEL ELEVATOR		AG-414	WHITE	PMS 425	ACCORDING TO ARTWORK	4"X13"	ZINC ETCHED	1	NO DRILLING GROMMETS
BT-8c		FLYOVER LEVEL ELEVATOR		AG-414	WHITE	PMS 425	ACCORDING TO ARTWORK	4"X13"	ZINC ETCHED	1	NO DRILLING GROMMETS
BT-8d		FLYOVER LEVEL ELEVATOR		AG-414	WHITE	PMS 425	ACCORDING TO ARTWORK	6"X6"	ZINC ETCHED	1	NO DRILLING GROMMETS
BT-ex-ew		STREET LEVEL EXIT STAIRS	DO NOT ENTER	AG-402/AG-502	WHITE	PMS 425	ACCORDING TO ARTWORK	4"X13"	ZINC ETCHED	2	
CACS	OP-7408	CA KIOSK	PUSH FOR CUSTOMER ASSISTANT	AG-511	WHITE	PMS 425	VHB TAPE	5 5/8" x 5 5/8"	ZINC ETCHED	4	

DESIGN BY:									
DRAWN BY:		4	7/3/2023	ISSUED FOR BID					
CHECKED BY:									
APPROVED BY:		0	9/9/2022	ISSUED FOR PERMIT	MN	KH	SD		
CDOT/APPROVED BY:		NO.	DATE	REVISIONS	DES.	DRW.	CHK.	DCCO	CDOT

TRANSYSTEMS
222 SOUTH RIVERSIDE PLAZA SUITE 610
CHICAGO, ILLINOIS 60606

SKIDMORE, OWINGS & MERRILL LLP
224 SOUTH MICHIGAN AVENUE, SUITE 1000
CHICAGO, ILLINOIS 60604

CHICAGO DEPARTMENT OF TRANSPORTATION
DIVISION OF ENGINEERING

STATE / LAKE LOOP ELEVATED STATION
200 NORTH STATE STREET, CHICAGO, IL 60601

SPEC. NO.

SIGNAGE SCHEDULES

DRAWING NO.
AG-603

CDOT PROJECT D-1-209 | DATE: 9/9/2022 | REVISION NO.

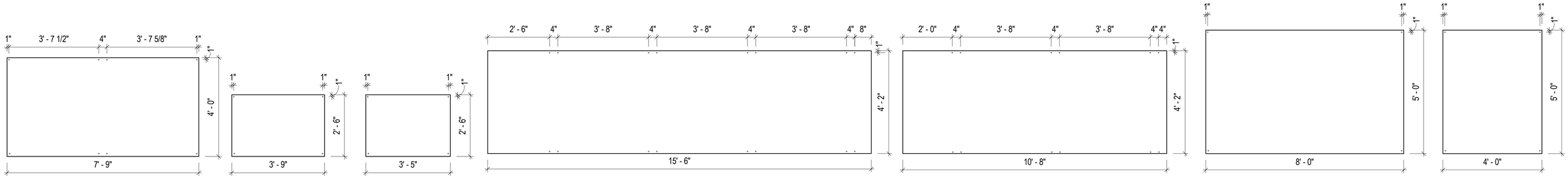

SIGNAGE P-35B1 PANEL

SIGNAGE P-37D3E/P-37D4 PANEL

SIGNAGE P-37D3W PANEL

SIGNAGE P-37E PANEL

SIGNAGE P-37F PANEL

SIGNAGE P-74B1 PANEL

SIGNAGE P-74B2 PANEL

2 DRILLING PATTERNS - TRANSIT INFO PANELS

1/2" = 1'-0"

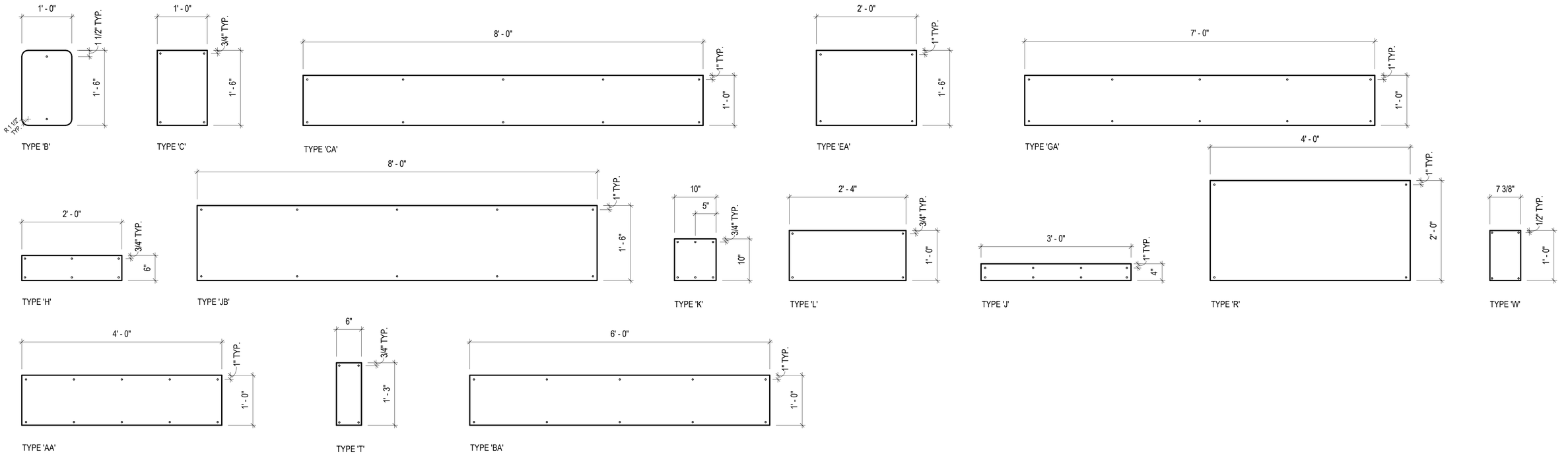

TYPE 'B'

TYPE 'C'

TYPE 'CA'

TYPE 'EA'

TYPE 'GA'

TYPE 'H'

TYPE 'JB'

TYPE 'K'

TYPE 'L'

TYPE 'J'

TYPE 'R'

TYPE 'W'

TYPE 'AA'

TYPE 'T'

TYPE 'BA'

1 AG - DRILLING PATTERNS - NON ILLUMINATED

1" = 1'-0"

DESIGN BY:									
DRAWN BY:		4	7/3/2023	ISSUED FOR BID					
CHECKED BY:									
APPROVED BY:		0	9/9/2022	ISSUED FOR PERMIT	MN	KH	SD		
CDOT/APPROVED BY:		NO.	DATE	REVISIONS	DES.	DRW.	CHK.	DCCO	CDOT

TRANSYSTEMS
222 SOUTH RIVERSIDE PLAZA SUITE 610
CHICAGO, ILLINOIS 60606

SKIDMORE, OWINGS & MERRILL LLP
224 SOUTH MICHIGAN AVENUE, SUITE 1000
CHICAGO, ILLINOIS 60604

CHICAGO DEPARTMENT OF TRANSPORTATION
DIVISION OF ENGINEERING

STATE / LAKE LOOP ELEVATED STATION
200 NORTH STATE STREET, CHICAGO, IL 60601

SIGNAGE DRILLING PATTERNS

CDOT PROJECT D-1-209

DATE: 9/9/2022

SPEC. NO.

DRAWING NO. AG-604

REVISION NO.

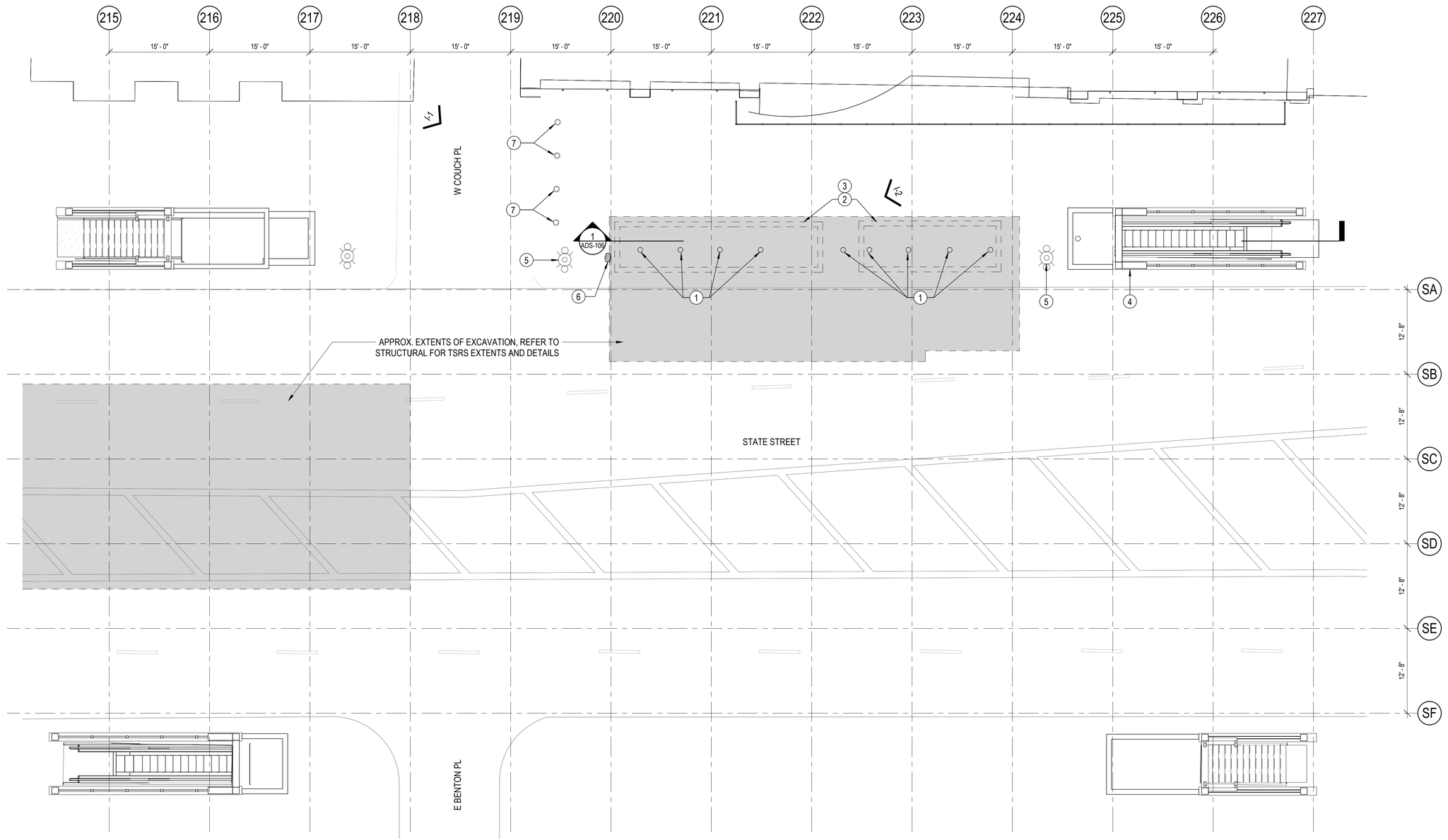

1 SUBWAY STREET LEVEL DEMO PLAN

1/8" = 1'-0"

DEMOLITION KEY NOTES (APPLIES TO THIS SHEET ONLY):

1. REMOVE BOLLARD AND ASSOCIATED FOUNDATIONS
2. REMOVE LANDSCAPING AND PLANTER IN ITS ENTIRETY AND CUT/REMOVE PARTIAL CONCRETE SIDEWALK TO ACCOMMODATE NEW ELEVATOR
3. PATCH/REPAIR SIDEWALK, REFER TO CIVIL
4. EXISTING ESCALATOR AND ENCLOSURE TO REMAIN
5. EXISTING LIGHT POLE TO REMAIN
6. EXISTING FIRE HYDRANT TO BE REMOVED, SEE CIVIL. REPLACEMENT HYDRANT MUST BE IN SERVICE PRIOR TO TO START OF DEMOLITION WORK SHOWN ON THIS SHEET.
7. EXISTING BOLLARDS TO REMAIN

DEMOLITION LEGEND

- AREA TO BE DEMOLISHED
- EXISTING TO BE DEMOLISHED
- EXISTING TO REMAIN
- I-1 PHOTOS

DESIGN BY:									
DRAWN BY:									
CHECKED BY:									
APPROVED BY:		4	7/3/2023	ISSUED FOR BID	KP	KP	NL		
CDOT/APPROVED BY:		NO.	DATE	REVISIONS	DES.	DRW.	CHK.	DCCO	CDOT

TRANSYSTEMS
222 SOUTH RIVERSIDE PLAZA SUITE 610
CHICAGO, ILLINOIS 60606

LICENSED ARCHITECT
QUENTIN PETERSEN
001.024068
STATE OF ILLINOIS

CHICAGO DEPARTMENT OF TRANSPORTATION
DIVISION OF ENGINEERING

STATE / LAKE LOOP ELEVATED STATION
200 NORTH STATE STREET, CHICAGO, IL 60601

SUBWAY STREET LEVEL DEMOLITION PLAN

CDOT PROJECT D-1-209

DATE: 9/9/2022

SPEC. NO.

DRAWING NO. ADS-101

REVISION NO.4

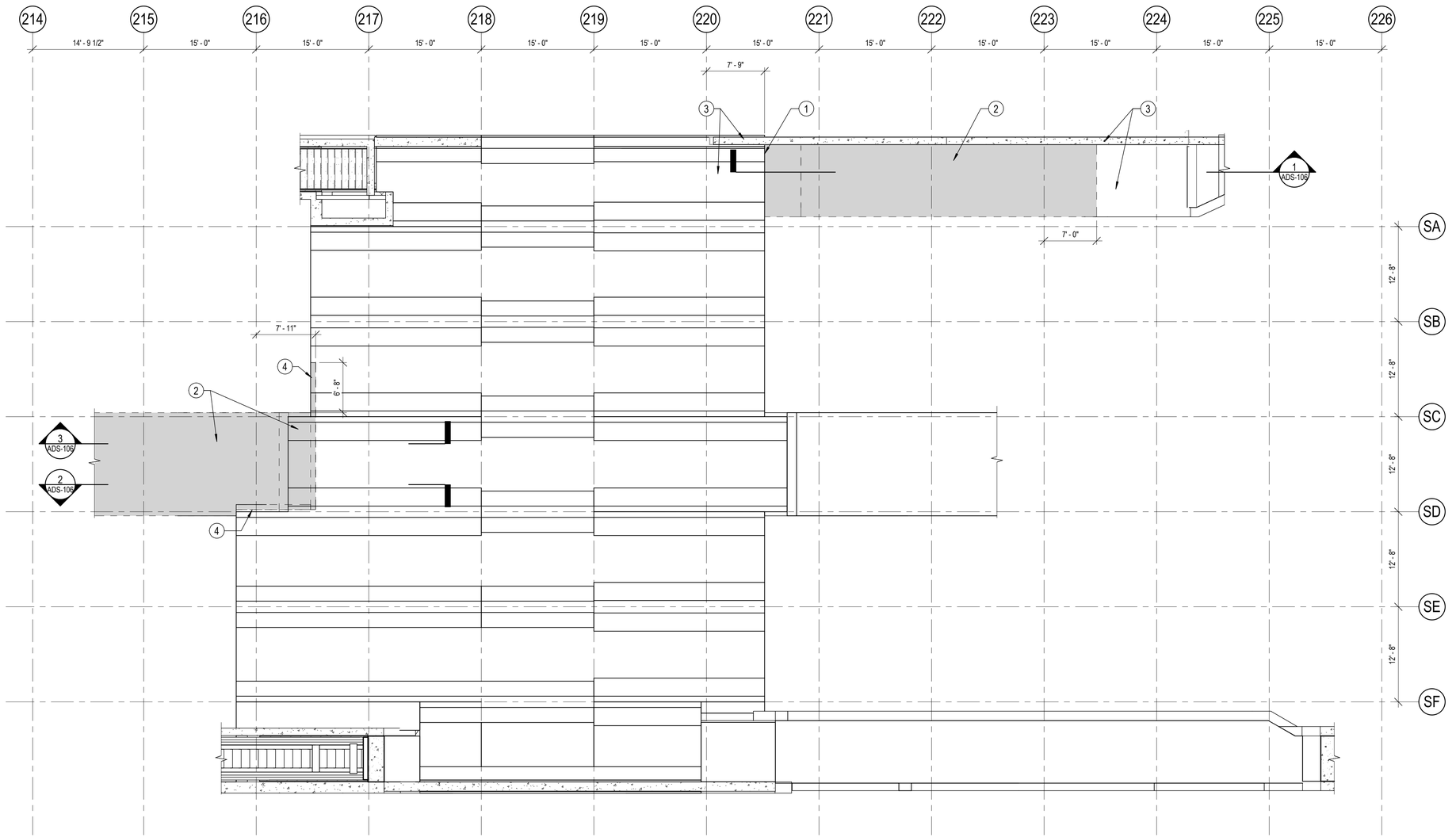

1 SUBWAY MEZZANINE ROOF DEMO PLAN

1/8" = 1'-0"

GENERAL NOTES:

1. CONTRACTOR SHALL REPAIR PRE-EXISTING LEAKS OR CRACKS IN THE EXISTING CONCRETE WITH AN EPOXY RESIN SYSTEM THAT CAN BE INJECTED. THE PRODUCT SPECIFICATIONS AND INFORMATION ON THE APPLICATION PROCESS SHALL BE SUBMITTED TO COMMISSIONER AS A SUBMITTAL FOR REVIEW PRIOR TO APPLICATION.

DEMOLITION KEY NOTES (APPLIES TO THIS SHEET ONLY):

1 CUT OFF ROOF SLAB TO MATCH NORTH FACE OF MEZZANINE WALL/ GRADE BEAM. CONTRACTOR TO USE CAUTION NOT TO DAMAGE EXISTING CONCRETE TO REMAIN.
2 REMOVE CONCRETE ROOF
3 EXISTING STRUCTURE TO REMAIN.
4 DEMOLISH 8" OF EXISTING CONCRETE MEZZ ROOF SLAB AT EXTERIOR OF ROOF.

DEMOLITION LEGEND

AREA TO BE DEMOLISHED
EXISTING TO BE DEMOLISHED
EXISTING TO REMAIN
I-1 PHOTOS

DESIGN BY:									
DRAWN BY:									
CHECKED BY:									
APPROVED BY:		4	7/3/2023	ISSUED FOR BID	KP	KP	NL		
CDOT/APPROVED BY:		NO.	DATE	REVISIONS	DES.	DRW.	CHK.	DCCO	CDOT

TranSystems
TRANSYSTEMS
222 SOUTH RIVERSIDE PLAZA SUITE 610
CHICAGO, ILLINOIS 60606

LICENSED ARCHITECT
QUENTIN PETERSEN
001.024068
STATE OF ILLINOIS

CDOT
CHICAGO DEPARTMENT OF TRANSPORTATION
DIVISION OF ENGINEERING

STATE / LAKE LOOP ELEVATED STATION
200 NORTH STATE STREET, CHICAGO, IL 60601

SUBWAY MEZZANINE ROOF DEMO PLAN

CDOT PROJECT D-1-209 | DATE: 9/9/2022

SPEC. NO.

DRAWING NO. ADS-102

REVISION NO.4

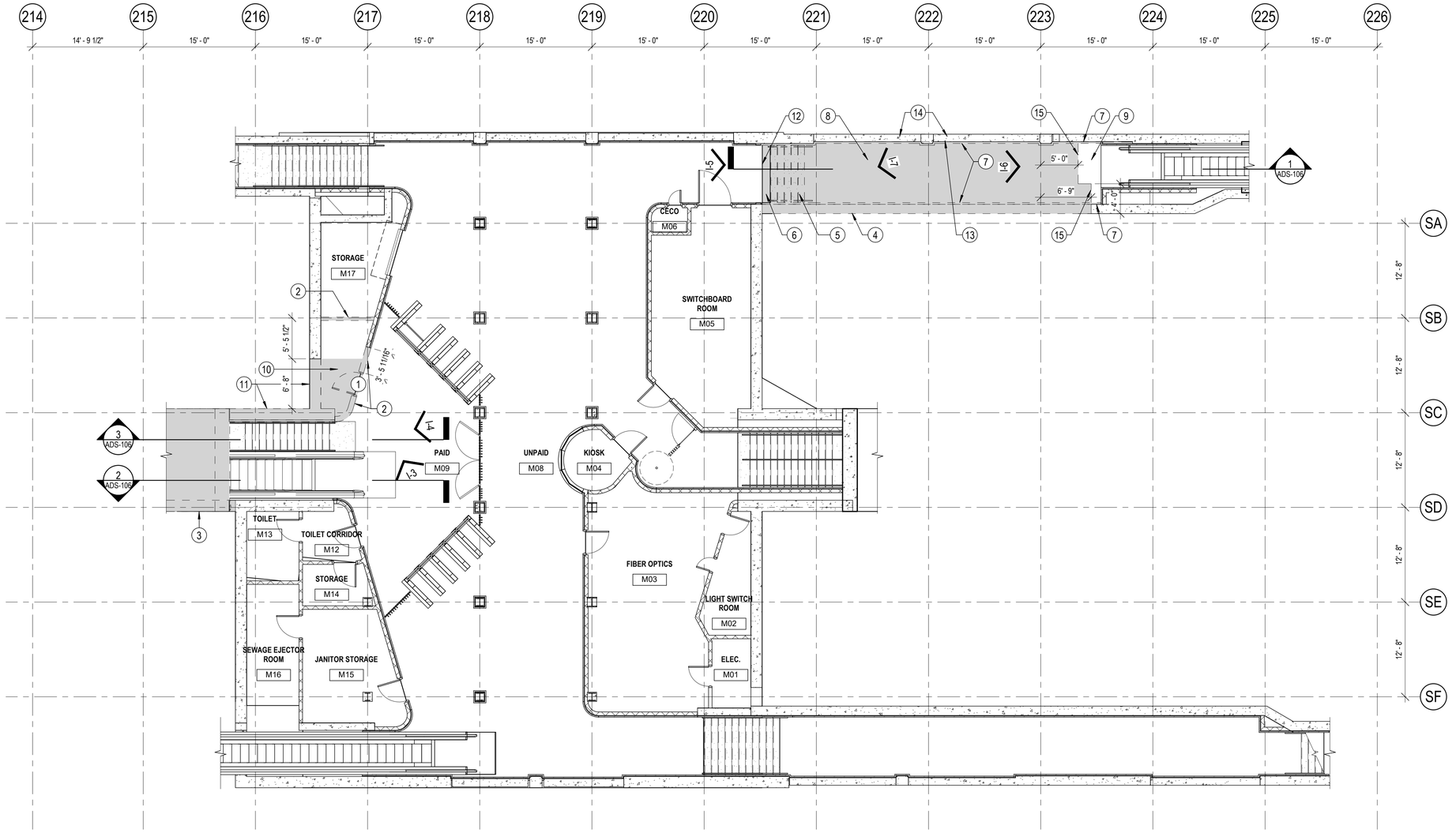

1 SUBWAY MEZZANINE LEVEL DEMO PLAN

1/8" = 1'-0"

GENERAL NOTES:

1. CONTRACTOR SHALL REPAIR PRE-EXISTING LEAKS OR CRACKS IN THE EXISTING CONCRETE WITH AN EPOXY RESIN SYSTEM THAT CAN BE INJECTED. THE PRODUCT SPECIFICATIONS AND INFORMATION ON THE APPLICATION PROCESS SHALL BE SUBMITTED TO COMMISSIONER AS A SUBMITTAL FOR REVIEW PRIOR TO APPLICATION.

DEMOLITION KEY NOTES (APPLIES TO THIS SHEET ONLY):

1 REMOVE S.S. DOOR AND FRAME IN ITS ENTIRETY
2 REMOVE WALL IN ITS ENTIRETY FROM FLOOR SLAB TO ROOF SLAB
3 REMOVE CONCRETE WALL, SEE ADS-106 FOR EXTENTS
4 REMOVE CONCRETE WALL COMPLETE FROM FLOOR SLAB TO CEILING SLAB
5 REMOVE GRANITE TREADS/RISERS, CONCRETE STAIRS AND MTL RAILING IN THEIR ENTIRETY
6 REMOVE TRENCH DRAIN, SEE PLUMBING
7 REMOVE SGFT
8 SAW-CUT AND REMOVE EXISTING CONCRETE SLAB -ROOF AND FOUNDATION MAT
9 CONCRETE SLAB TO REMAIN
10 REMOVE TOPPING SLAB
11 REMOVE CONCRETE WALL FROM TOP OF MEZZANINE LEVEL FLOOR SLAB UP TO ROOF SLAB
12 CUT OFF MAT AND ROOF SLABS AT EXTERIOR FACE OF MEZZANINE WALL / GRADE BEAM. CONTRACTOR TO USE CAUTION NOT TO DAMAGE EXISTING CONCRETE TO REMAIN.
13 CUT OFF MAT AND ROOF SLABS AT EAST FACE OF EXISTING VAULT WALL. EXISTING VAULT WALL TO REMAIN. CONTRACTOR TO PROTECT EXISTING WALL DURING CONSTRUCTION TO AVOID DAMAGE AND PROVIDE TEMPORARY SUPPORT FOR THE WALL DURING CONSTRUCTION.
14 CONTRACTOR TO UNDERPIN EXISTING VAULT WALL AND FOUNDATION TO STABILIZE CONDITIONS DURING CONSTRUCTION AND UNTIL THE FINAL LOWER FOUNDATIONS ARE IN PLACE.
15 CUT OFF MAT SLAB AS SHOWN ON PLAN. CUT OFF ROOF SLAB 6'-9" FROM GRID 223. CONTRACTOR TO USE CAUTION NOT TO DAMAGE EXISTING CONCRETE TO REMAIN.

DEMOLITION LEGEND

- AREA TO BE DEMOLISHED
- EXISTING TO BE DEMOLISHED
- EXISTING TO REMAIN
- I-1 PHOTOS

DESIGN BY:									
DRAWN BY:									
CHECKED BY:									
APPROVED BY:		4	7/3/2023	ISSUED FOR BID	KP	KP	NL		
CDOT/APPROVED BY:		NO.	DATE	REVISIONS	DES.	DRW.	CHK.	DCCO	CDOT

TranSystems
TRANSYSTEMS
222 SOUTH RIVERSIDE PLAZA SUITE 610
CHICAGO, ILLINOIS 60606

LICENSED ARCHITECT
QUENTIN PETERSEN
001.024068
STATE OF ILLINOIS

CDOT
CHICAGO DEPARTMENT OF TRANSPORTATION
DIVISION OF ENGINEERING

STATE / LAKE LOOP ELEVATED STATION
200 NORTH STATE STREET, CHICAGO, IL 60601

SUBWAY MEZZANINE DEMOLITION PLAN

CDOT PROJECT D-1-209

DATE: 9/9/2022

SPEC. NO.

DRAWING NO. ADS-103

REVISION NO.4

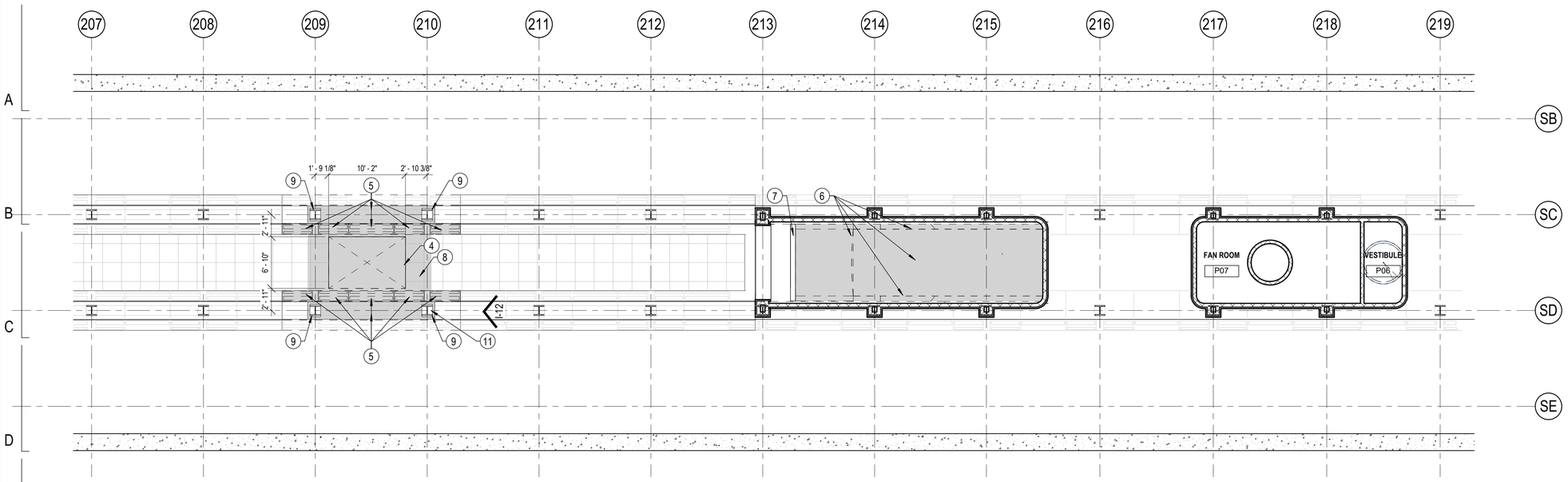

2 PLATFORM REFLECTED CEILING DEMO PLAN

1/8" = 1'-0"

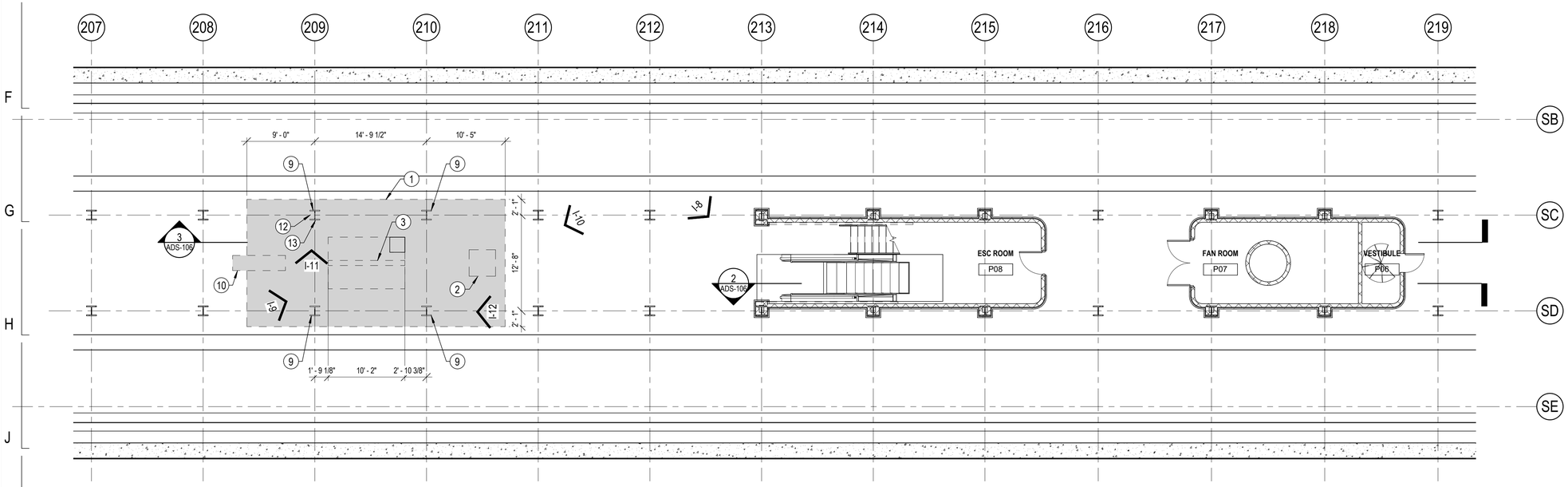

1 SUBWAY PLATFORM LEVEL DEMO PLAN

1/8" = 1'-0"

GENERAL NOTES:

1. CONTRACTOR SHALL REPAIR PRE-EXISTING LEAKS OR CRACKS IN THE EXISTING CONCRETE WITH AN EPOXY RESIN SYSTEM THAT CAN BE INJECTED. THE PRODUCT SPECIFICATIONS AND INFORMATION ON THE APPLICATION PROCESS SHALL BE SUBMITTED TO COMMISSIONER AS A SUBMITTAL FOR REVIEW PRIOR TO APPLICATION.

DEMOLITION KEY NOTES (APPLIES TO THIS SHEET ONLY):

1 SAW-CUT AND REMOVE PORTION OF EXISTING CONCRETE SLAB TO ACCOMODATE NEW ELEVATOR, SHORING, & RELOCATED COLUMNS, REF STRUCT. REMOVE AND SALVAGE GRANITE FLOORING.
2 REMOVE FLOOR ACCESS PANEL IN ITS ENTIRETY.
3 REMOVE WALL BELOW PLATFORM THROUGH ELEVATOR PIT. GC TO COORDINATE PIT SIZE WITH ELEVATOR MANUFACTURER.
4 SAW-CUT AND REMOVE PORTION OF EXISTING CONCRETE TUBE AND STEEL LINER TO ACCOMODATE NEW ELEVATOR. GC TO COORDINATE ELEVATOR SHAFT SIZE PER MANUFACTURER REQUIREMENTS TO ADJUST DIMENSION AS REQUIRED.
5 REMOVE EXISTING LIGHT TRAY SECTIONS. WIRING WITHIN TO BE REROUTED, SEE ELECTRICAL.
6 REMOVE CEILING SYSTEM IN ITS ENTIRETY AND LIGHT FIXTURES (SEE ELECTRICAL) AT CEILING OF STAIR/ESCALATOR
7 S.S. SOFFIT TO REMAIN
8 REMOVE/REPLACE CERAMIC TILE CEILING PANEL SYSTEM TO ACCOMODATE NEW ELEVATOR HOISTWAY
9 REMOVE STEEL COLUMN. SHORE EXISTING BEAMS S20 PRIOR TO REMOVAL OF STEEL COLUMNS. REFER TO STRUCTURAL FOR SUGGESTED SHORING.
10 REMOVE BENCH.
11 REMOVE & RELOCATE TELECOM. DEVICE, REF. TELECOM
12 REMOVE PAYPHONE HOUSING.
13 REMOVE & RELOCATE CUSTOMER ASSISTANT CALL BUTTON, REF. TELECOM.

DEMOLITION LEGEND

- AREA TO BE DEMOLISHED
- EXISTING TO BE DEMOLISHED
- EXISTING TO REMAIN
- I-1 PHOTOS

DESIGN BY:									
DRAWN BY:									
CHECKED BY:									
APPROVED BY:		4	7/3/2023	ISSUED FOR BID	KP	KP	NL		
CDOT/APPROVED BY:		NO.	DATE	REVISIONS	DES.	DRW.	CHK.	DCCO	CDOT

TranSystems
TRANSYSTEMS
222 SOUTH RIVERSIDE PLAZA SUITE 610
CHICAGO, ILLINOIS 60606

LICENSED ARCHITECT
QUENTIN PETERSEN
001.024088
STATE OF ILLINOIS

CDOT
CHICAGO DEPARTMENT OF TRANSPORTATION
DIVISION OF ENGINEERING

STATE / LAKE LOOP ELEVATED STATION
200 NORTH STATE STREET, CHICAGO, IL 60601

SUBWAY PLATFORM DEMOLITION PLAN

CDOT PROJECT D-1-209 | DATE: 9/9/2022

SPEC. NO.

DRAWING NO. ADS-104

REVISION NO.4

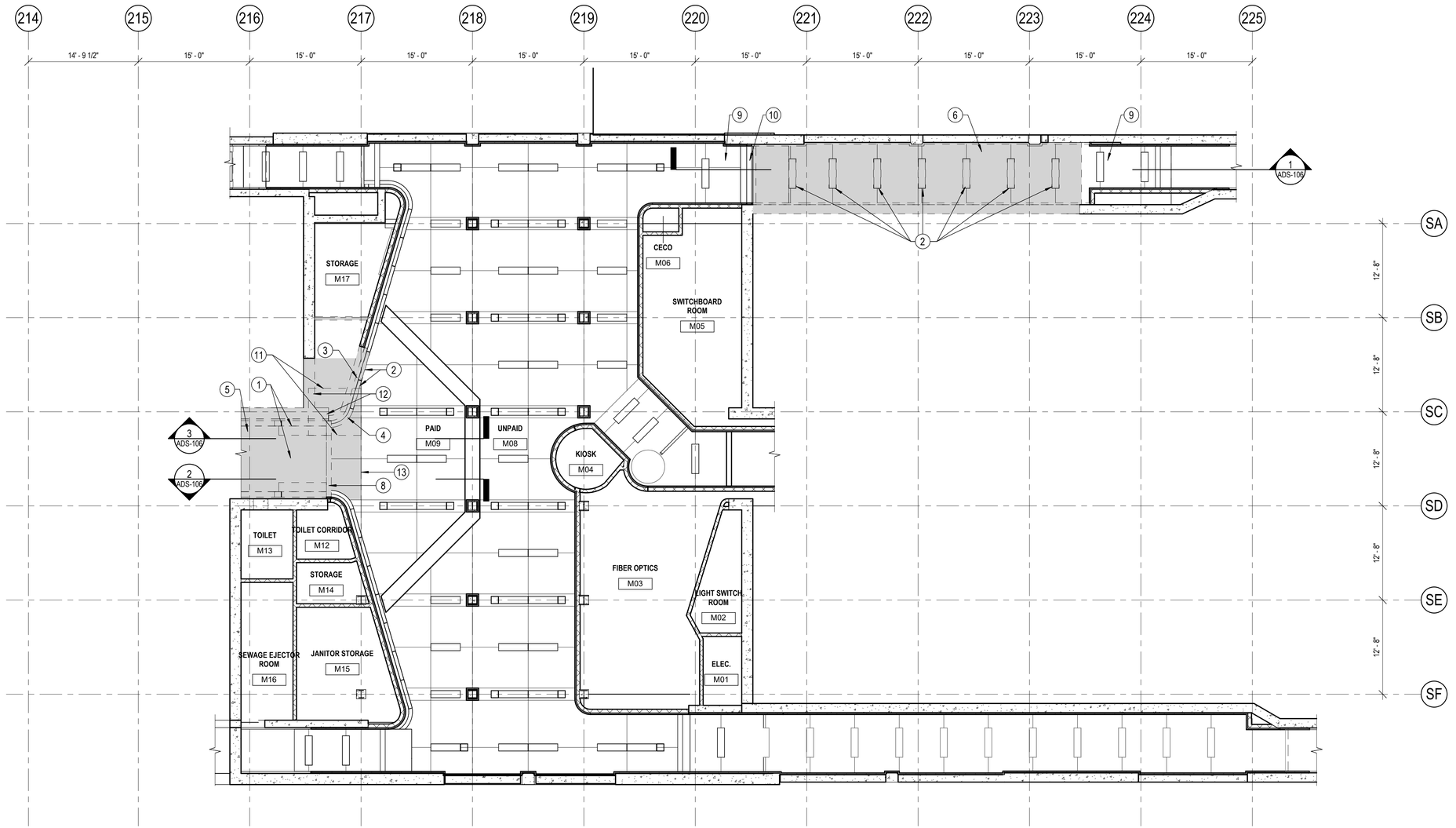

1 MEZZANINE REFLECTED CEILING DEMO PLAN NORTH

1/8" = 1'-0"

GENERAL NOTES:

1. CONTRACTOR SHALL REPAIR PRE-EXISTING LEAKS OR CRACKS IN THE EXISTING CONCRETE WITH AN EPOXY RESIN SYSTEM THAT CAN BE INJECTED. THE PRODUCT SPECIFICATIONS AND INFORMATION ON THE APPLICATION PROCESS SHALL BE SUBMITTED TO COMMISSIONER AS A SUBMITTAL FOR REVIEW PRIOR TO APPLICATION.

DEMOLITION KEY NOTES (APPLIES TO THIS SHEET ONLY):

1 REMOVE TILE CEILING PANELS AND LIGHT FIXTURES AT CEILING OF STAIR/ESCALATOR
2 REMOVE LIGHT FIXTURE, REF ELEC
3 REMOVE SS SOFFIT. MATCH EXTENTS OF ADJACENT WALL DEMO.
4 REMOVE SS LIGHT TRAY
5 REMOVE CONCRETE ROOF ABOVE ESCALATOR & STAIR. REFER TO ADS-106 FOR EXTENTS
6 REMOVE CONCRETE ROOF. REMOVE CEMENT PLASTER CEILING UP TO NEAREST CONTROL JOINT.
8 REMOVE SS SOFFIT.
9 CONCRETE ROOF TO REMAIN.
10 SS SOFFIT WITH SIGNAGE AND LIGHT FIXTURE TO REMAIN.
11 DEMOLISH PARTIAL DEPTH OF MEZZ CONCRETE ROOF SLAB UNDER EXISTING STEEL BEAM AS REQUIRED TO INSTALL NEW COLUMN, REF STRUCT
12 SHORE EXISTING ROOF STRUCTURE PRIOR TO REMOVAL OF EXISTING WALL AND CONCRETE COLUMN. SHORING TO REMAIN IN PLACE UNTIL FINAL CONSTRUCTION IS COMPLETE.
13 REMOVE EXISTING CEMENT PLASTER CEILING AS NEEDED, EXTEND TO NEAREST CONTROL JOINT

DEMOLITION LEGEND

- AREA TO BE DEMOLISHED
- EXISTING TO BE DEMOLISHED
- EXISTING TO REMAIN
- I-1 PHOTOS

DESIGN BY:									
DRAWN BY:									
CHECKED BY:									
APPROVED BY:		4	7/3/2023	ISSUED FOR BID	KP	KP	NL		
CDOT/APPROVED BY:		NO.	DATE	REVISIONS	DES.	DRW.	CHK.	DCCO	CDOT

TRANSYSTEMS
222 SOUTH RIVERSIDE PLAZA SUITE 610
CHICAGO, ILLINOIS 60606

LICENSED ARCHITECT
QUENTIN PETERSEN
001.024068
STATE OF ILLINOIS

CDOT
CHICAGO DEPARTMENT OF TRANSPORTATION
DIVISION OF ENGINEERING

STATE / LAKE LOOP ELEVATED STATION
200 NORTH STATE STREET, CHICAGO, IL 60601

SUBWAY MEZZANINE REFLECTED CEILING DEMO PLAN

CDOT PROJECT D-1-209 | DATE: 9/9/2022

SPEC. NO.

DRAWING NO. ADS-105

REVISION NO.4

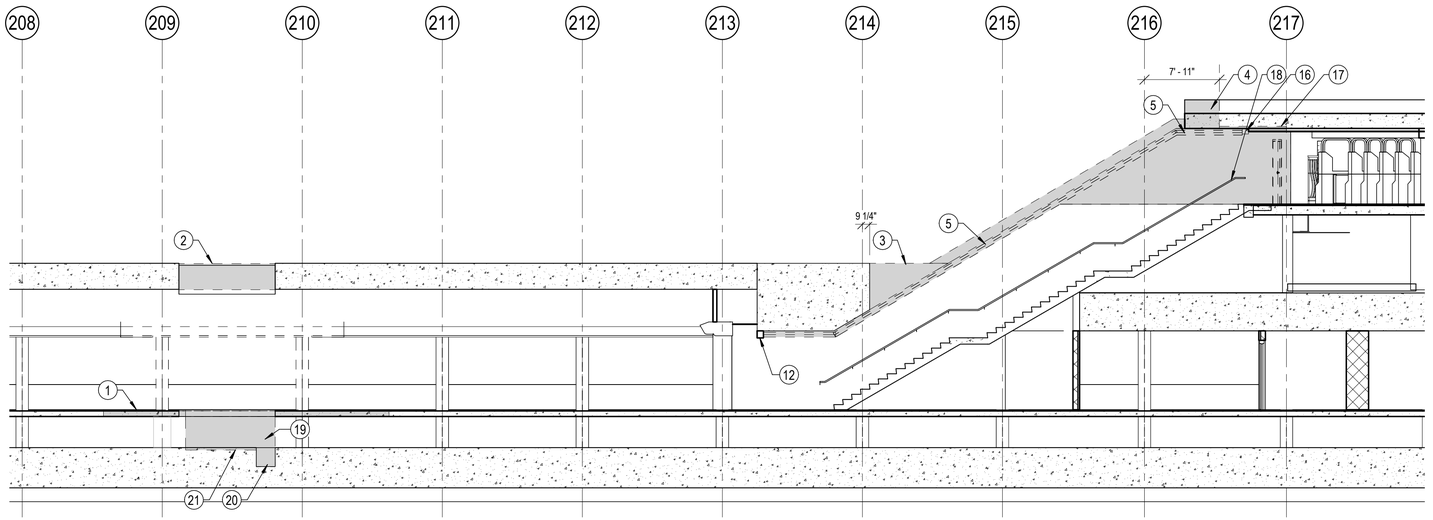

3 DEMO SECTION
1/8" = 1'-0"

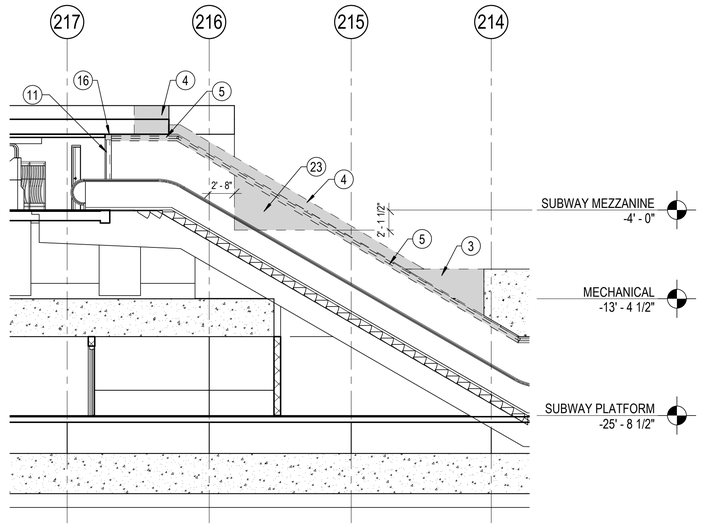

2 DEMO SECTION
1/8" = 1'-0"

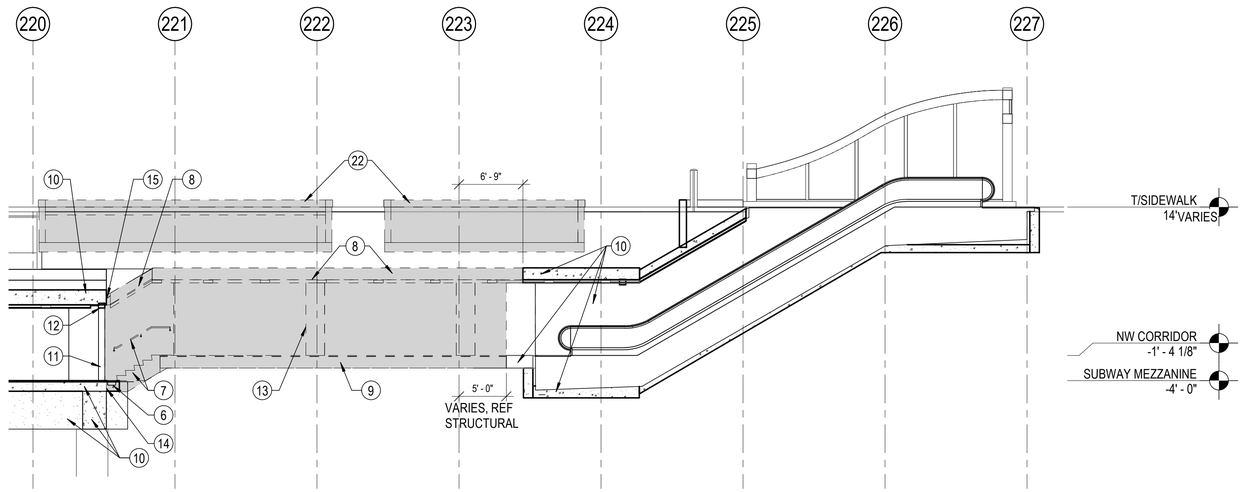

1 DEMO SECTION
1/8" = 1'-0"

DEMOLITION KEY NOTES (APPLIES TO THIS SHEET ONLY):

1. REMOVE PLATFORM FLOOR TO ACCOMODATE NEW ELEVATOR, RELOCATED COLUMNS, AND SHORING. REMOVE AND SALVAGE GRANITE FLOORING, REF PLAN FOR EXTENTS.
2. REMOVE TUBE STRUCTURE AND STEEL LINER TO ACCOMODATE NEW ELEVATOR. GC TO COORDINATE ELEVATOR SHAFT/PIT SIZE PER ELEVATOR MANUFACTURER REQUIREMENTS, ADJUST DIMENSION AS REQUIRED.
3. CUT/REMOVE TUBE STRUCTURE.
4. CUT/REMOVE ROOFING AND ROOF STRUCTURE OVER EXISTING STAIR AND ESCALATOR
5. REMOVE CEILING SYSTEM IN ITS ENTIRETY AND LIGHT FIXTURES AT CEILING OF STAIR/ESCALATOR
6. REMOVE TRENCH DRAIN
7. REMOVE GRANITE TREADS/RIDERS, CONCRETE STAIRS AND MTL RAILING IN THEIR ENTIRETY
8. REMOVE CONCRETE ROOF AND CEMENT PLASTER CEILING IN THEIR ENTIRETY, INCLUDING LIGHT FIXTURES, SEE ELECTRICAL
9. REMOVE GRANITE FLOOR PAVERS AND CONCRETE FLOOR SLAB INCLUDING ASSOCIATED FOUNDATIONS.
10. EXISTING STRUCTURE TO REMAIN.
11. EXISTING SS FILLER PANEL TO REMAIN
12. EXISTING SS SOFFIT TO REMAIN
13. REMOVE STRUCTURAL GLAZED FACING TILE (SGFT), SEE PLAN FOR EXTENTS
14. CUT OFF MAT SLAB AT FACE OF MEZZANINE WALL / GRADE BEAM. CONTRACTOR TO USE CAUTION NOT TO DAMAGE EXISTING CONCRETE TO REMAIN.
15. CUT OFF ROOF SLAB TO MATCH NORTH FACE OF MEZZANINE WALL/ GRADE BEAM. CONTRACTOR TO USE CAUTION NOT TO DAMAGE EXISTING CONCRETE TO REMAIN.
16. REMOVE SS SOFFIT
17. DEMOLISH PARTIAL DEPTH OF CONCRETE MEZZ ROOF SLAB UNDER EXISTING STEEL BEAM AS REQUIRED TO INSTALL NEW COLUMN, REF STRUCT
18. PROVIDE TEMPORARY SUPPORT FOR HANDRAIL DURING CONSTRUCTION.
19. REMOVE WALL BELOW PLATFORM, TO ACCOMODATE ELEVATOR PIT.
20. REMOVE CONCRETE AS REQ'D FOR SUMP PIT. COORDINATE SIZE & LOCATION WITH ELEVATOR MANUFACTURER.
21. REMOVE CONCRETE AS REQ'D FOR ELEVATOR INSTALLTION.
22. REMOVE RECESSED PLANTERS.
23. CUT/REMOVE CONCRETE WALL, SALVAGE ADJACENT SGFT.

DEMOLITION LEGEND

- AREA TO BE DEMOLISHED
- EXISTING TO BE DEMOLISHED
- EXISTING TO REMAIN
- I-1 PHOTOS

DESIGN BY:									
DRAWN BY:									
CHECKED BY:									
APPROVED BY:		4	7/3/2023	ISSUED FOR BID	KP	KP	NL		
CDOT/APPROVED BY:		NO.	DATE	REVISIONS	DES.	DRW.	CHK.	DCCO	CDOT

TRANSYSTEMS
222 SOUTH RIVERSIDE PLAZA SUITE 610
CHICAGO, ILLINOIS 60606

LICENSED ARCHITECT
QUENTIN PETERSEN
001.024068
STATE OF ILLINOIS

CDOT
CHICAGO DEPARTMENT OF TRANSPORTATION
DIVISION OF ENGINEERING

STATE / LAKE LOOP ELEVATED STATION
200 NORTH STATE STREET, CHICAGO, IL 60601

SUBWAY DEMOLITION SECTIONS

SPEC. NO.

DRAWING NO.
ADS-106

CDOT PROJECT D-1-209

DATE: 9/9/2022

REVISION NO.4

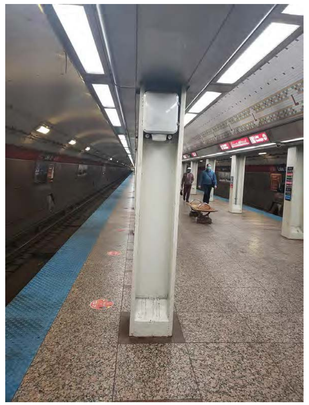

IMAGE 12: TELECOM. DEVICE

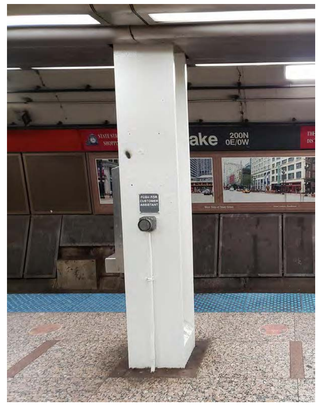

IMAGE 11: CUST. ASSIST. CALL BUTTON & PAYPHONE HOUSING

IMAGE 10: PLATFORM

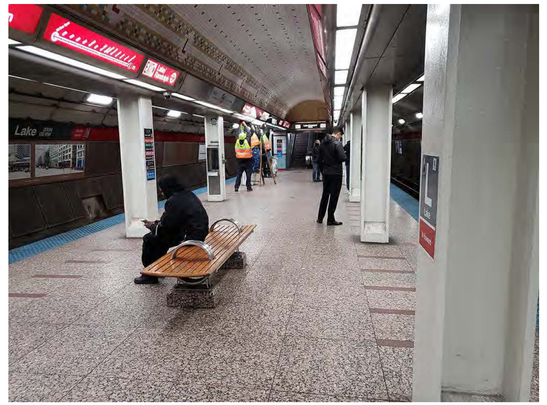

IMAGE 9: PLATFORM

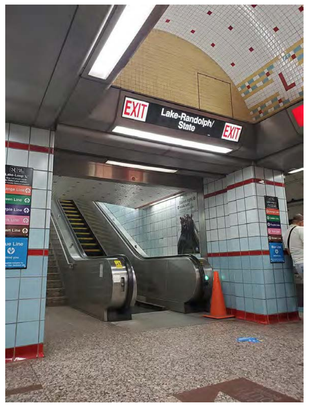

IMAGE 8: PLATFORM

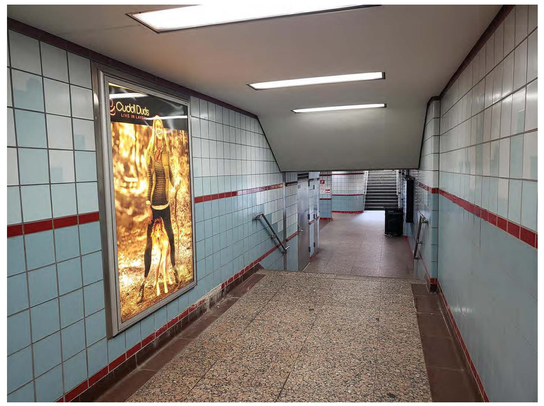

IMAGE 7: NW CORRIDOR

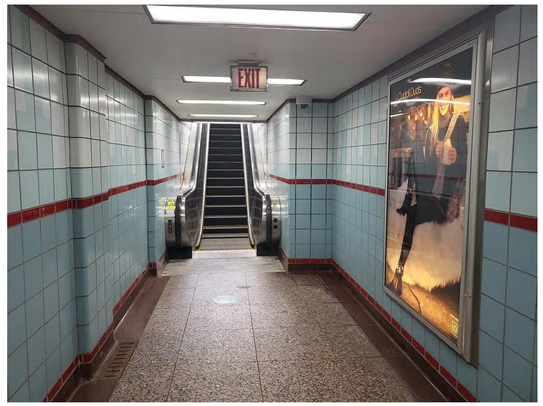

IMAGE 6: NW CORRIDOR

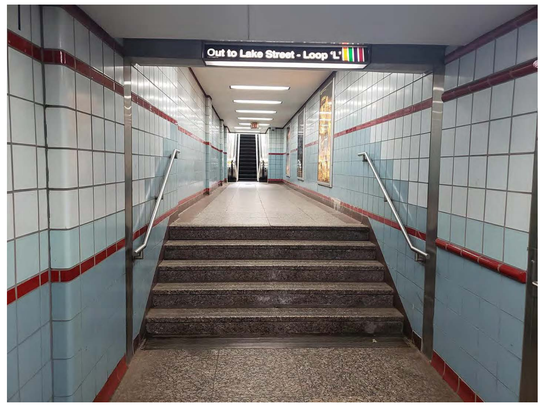

IMAGE 5: NW CORRIDOR

IMAGE 4: MEZZANINE PAID AREA

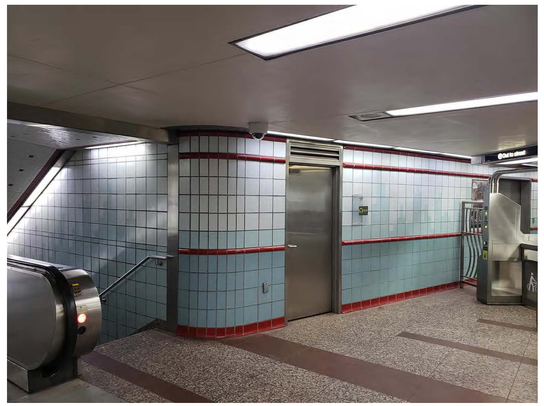

IMAGE 3: MEZZANINE PAID AREA

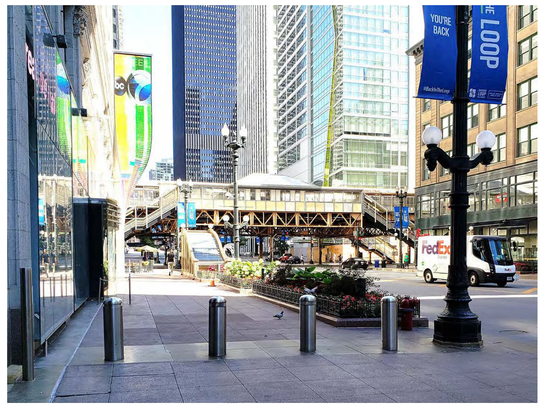

IMAGE 2: PLANTERS

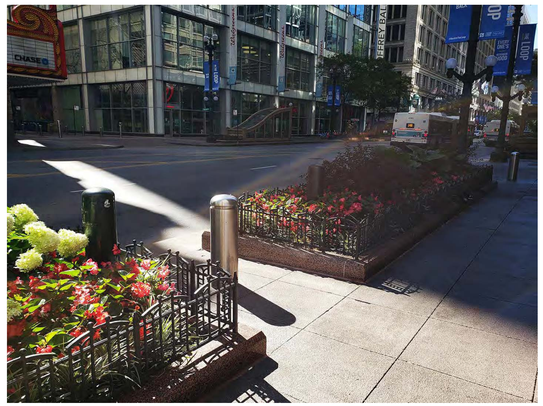

IMAGE 1: PLANTERS

DESIGN BY:										
DRAWN BY:										
CHECKED BY:										
APPROVED BY:		4	7/3/2023	ISSUED FOR BID	KP	KP	NL			
CDOT/APPROVED BY:		NO.	DATE	REVISIONS	DES.	DRW.	CHK.	DCCO	CDOT	

TranSystems
TRANSYSTEMS
222 SOUTH RIVERSIDE PLAZA SUITE 610
CHICAGO, ILLINOIS 60606

LICENSED ARCHITECT
QUENTIN PETERSEN
001.024068
STATE OF ILLINOIS

CDOT
CHICAGO DEPARTMENT OF TRANSPORTATION
DIVISION OF ENGINEERING

STATE / LAKE LOOP ELEVATED STATION
200 NORTH STATE STREET, CHICAGO, IL 60601

SUBWAY DEMOLITION PHOTOS

CDOT PROJECT D-1-209

DATE: 9/9/2022

SPEC. NO.

DRAWING NO.
ADS-107

REVISION NO.4

MATERIAL DESIGNATIONS

- SOIL
- GRAVEL, COMPACTED FILL
- ASPHALT DRIVE, ASPHALT MEMBRANE
- CONCRETE
- BRICK MASONRY
- CONCRETE MASONRY
- STONE MASONRY
- ALUMINUM
- STEEL
- ORNAMENTAL METALS (BRASS, BRONZE, ETC)
- PLYWOOD
- MEDIUM DENSITY FIBERBOARD
- SOLID WOOD
- CONTINUOUS WOOD BLOCKING
- NON-CONTINUOUS WOOD BLOCKING
- FIREPROOFING
- INSULATION, SEMI-RIGID (ROCK WOOL, FIBER BOARD)
- INSULATION, RIGID (POLYISOCYANURATE, POLYSTYRENE)
- INSULATION, BATT (GLASS FIBER BATT, ACOUSTIC BATT)
- ACOUSTIC CEILING TILE
- GYPSUM WALL BOARD, FACING BOARD
- PLASTER, SAND, GROUT, MORTAR, LEVELER
- TERRAZZO
- TILE
- WOOD FLOORING, WOOD TRIM

SYMBOLS

EXTERIOR ELEVATION

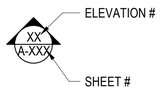

GRID

DETAIL SECTION

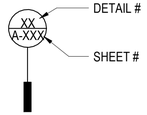

BUILDING SECTION

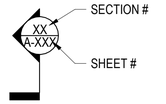

LEVEL - ARCHITECTURAL

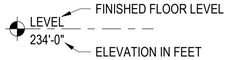

DETAIL CALLOUT

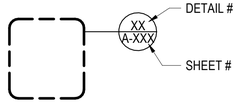

INTERIOR ELEVATION

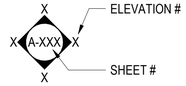

LEVEL - STRUCTURAL

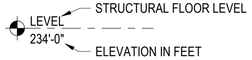

SPOT ELEVATION

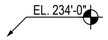

ABBREVIATIONS

&	AND
/	ANGLE
@	AT
#	NUMBER
A/C	AIR CONDITIONING
A/V	AUDIO VISUAL
ACONC	ARCHITECTURAL CONCRETE
ACST	ACOUSTICAL
ACST PLAS	ACOUSTICAL PLASTER
ACT	ACOUSTICAL CEILING TILE
AD	AREA DRAIN
ADDL	ADDITIONAL
ADJ	ADJACENT
ADR	ACCESS DOOR
AF	ACCESS FLOOR
AFF	ABOVE FINISHED FLOOR
AGGR	AGGREGATE
AHU	AIR HANDLING UNIT
ALT	ALTERNATE
ALUM	ALUMINUM
ANOD	ANODIZED
APPROX	APPROXIMATE(LY)
AP	ACCESS PANEL
ARC	ARCHITECTURAL CONCRETE
ARCH	ARCHITECT(URAL)
AUTO	AUTOMATIC
AUX	AUXILIARY
AVG	AVERAGE
B/	BOTTOM OF
BD	BOARD
BEV	BEVELED
BLDG	BUILDING
BLKG	BLOCK(ING)
BM	BEAM
BMK	BENCHMARK
BOC	BOTTOM OF CURB
BWP	BENTONITE WATERPROOFING
CB	CATCH BASIN
CCTV	CLOSED CIRCUIT TELEVISION
CDOT	CHICAGO DEPT OF TRANSPORTATION
CEM PLAS	CEMENT PLASTER
CG	CORNER GUARD(S)
CI	CAST IRON
CJ	CONTROL JOINT
CL	CENTER LINE
CLG	CEILING
CLG HT	CEILING HEIGHT
CLO	CLOSET
CLR OPNG	CLEAR OPENING
CMU	CONCRETE MASONRY UNIT(S)
CO	CLEANOUT
COL	COLUMN
CONC	CONCRETE
CONF	CONFERENCE
CONN	CONNECT(ION)
CONSTR	CONSTRUCTION
CONT	CONTINUOUS / CONTINUE
CORR	CORRIDOR
CRB	CEMENTITIOUS ROOF BOARD
CS	CORK SHEET
CSK	COUNTSRSINK / COUNTSRSUNK
CT	CERAMIC TILE
CTA	CHICAGO TRANSIT AUTHORITY
CTR	CENTER(ED)
CU	CUBIC
CW	COLD WATER
DBL	DOUBLE
DD	DECK DRAIN
DEG	DEGREE(S)
DEPT	DEPARTMENT
DET	DETAIL(S)
DF	DRINKING FOUNTAIN
DIA	DIAMETER
DIAG	DIAGONAL
DIFF	DIFFUSER(S)
DIM	DIMENSION(S)
DISP	DISPENSER
DIV	DIVIDE / DIVISION
DL	DEAD LOAD
DMPF	DAMPPROOFING
DMPR	DAMPER
DN	DOWN
DP	DRAINAGE PANEL
DRLV	DOOR LOUVER
DWG	DRAWING(S)
EA	EACH
EC	EXPOSED CONSTRUCTION
EJ	EXPANSION JOINT
EJC	EXPANSION JOINT COVER
EL	ELEVATION (GRADE)
ELAST	ELASTOMERIC
ELEC	ELECTRIC(AL)
ELEC CL	ELECTRIC CLOSET
ELEV	ELEVATOR
ELEV	ELEVATION (BLDG)
EMER	EMERGENCY
ENCL	ENCLOSURE / ENCLOSE(D)
ENTR	ENTRANCE
EOS	EDGE OF SLAB
EPSS	EXPOSED PAINTED STRUCTURAL STEEL
EQ	EQUAL
EQUIP	EQUIPMENT
ESCAL	ESCALATOR
EW	EACH WAY
EWC	ELECTRIC WATER COOLER
EXH	EXHAUST
EXIST	EXISTING
EXP	EXPOSED
EXPN	EXPANSION
EXT	EXTERIOR
FA	FIRE ALARM
FAAP	FIRE ALARM ANNUNCIATOR PANEL
FAI	FRESH AIR INTAKE
FD	FLOOR DRAIN
FDMPR	FIRE DAMPER
FDTN	FOUNDATION
FE	FIRE EXTINGUISHER
FEC	FIRE EXTINGUISHER CABINET
FEM	FIBER ENTRANCE MAT
FH	FIRE HYDRANT
FHC	FIRE HOSE CABINET
FHR	FIRE HOSE RACK (REEL)
FIN	FINISH(ED)
FIN FL	FINISH FLOOR
FIN GR	FINISH GRADE
FLEX	FLEXIBLE
FLH	FLASHING
FLMT	FLUSH MOUNTED
FLR	FLOOR(S)
FLS	FLOOR SEALER
FLUOR	FLUORESCENT
FO	FINISHED OPENING
FP	FIREPROOFING
FR	FIRE RETARDANT / RATING / RESIST.
FRM	FRAME
FRTW	FIRE RETARDANT TREATED WOOD
FSS	FIRE STOPPING SYSTEM
FSE	FOOD SERVICE EQUIPMENT
FSP	FIRE STANDPIPE
FT	FEET (FOOT)
GA	GAUGE
GAL	GALLON(S)
GALV	GALVANIZED
GALV STL	HOT-DIP GALVANIZED STRUCTURAL STUDS
GFRC	GLASS FIBER REINFORCED CONCRETE
GRFG	GLASS FIBER REINFORCED GYPSUM
GG	GLAZING GASKET
GI	GALVANIZED IRON
GL	GLASS
GL BLK	GLASS BLOCK
GND	GROUND
GRAN	GRANITE
GRD	GRADE
GRL	GRILLE
GS	GLAZING SEALANT
GWB	GYPSUM WALLBOARD
GYP BD	GYPSUM BOARD
GYP PLAS	GYPSUM PLASTER
HD	HEAD
HDF	HIGH-DENSITY GLASS FIBER BOARD
HDW	HARDWARE
HEX	HEXAGON(AL)
HM	HOLLOW METAL
HNDRL	HANDRAIL
HO	HOLD OPEN
HORIZ	HORIZONTAL
HPT	HIGH POINT
HR	HOUR(S) (FIRE RESISTANCE RATING)
HT	HEIGHT
HVAC	HEATING, VENTILATING, AIR CONDITIONING
ID	INSIDE DIAMETER
INCL	INCLUDE(D) / INCLUSIVE / INCLUDING
INFO	INFORMATION
INS	INSULATION / INSULATE(D)
INSUL	INSULATION
INT	INTERIOR
JC	JANITOR CLOSET
JF	JOINT FILLER
JG	JOINT GASKET
JT	JOINT
KD	KNOCKDOWN
KO	KNOCKOUT
KPL	KICKPLATE
LAM	LAMINATE(D)
LAV	LAVATORY
LBS	POUND(S)
LD	LINEAR DIFFUSER
LDE	LOADING DOCK EQUIPMENT
LH	LEFT HAND
LIN	LINEAR
LKR	LOCKERS
LMST	LIMESTONE
LONG	LONGITUDINAL
LPT	LOW POINT
LR	LIVING ROOM
LTG	LIGHTING
LVR	LOUVER(ED)
MACH	MACHINE
MAINT	MAINTAIN / MAINTENANCE
MATL	MATERIAL
MAX	MAXIMUM
MB	METAL BASE
MBD	DRY ERASE MARKER BOARD
MBL	MARBLE
MDF	MEDIUM DENSITY FIBERBOARD
MECH	MECHANICAL
MED	MEDIUM
MEZZ	MEZZANINE
MFR	MANUFACTURER
MH	MANHOLE
MIN	MINIMUM
MISC	MISCELLANEOUS
ML	METAL LATH
ML WK	MILLWORK
MLDG	MOLDING
MO	MASONRY OPENING
MP	METAL PANEL
MTD	MOUNTED
MTL	METAL
MUL	MULLION
N	NORTH
NA	NOT APPLICABLE
NC	NOISE CRITERIA
NIC	NOT IN CONTRACT
NO	NUMBER
NOM	NOMINAL
NRC	NOISE REDUCTION COEFFICIENT
NTS	NOT TO SCALE
OA	OUTSIDE AIR
OC	ON CENTER
OD	OUTSIDE DIAMETER
OF	OUTSIDE FACE
OFD	OVERFLOW DRAIN
OH DR	OVERHEAD COILING DOOR
OPH	OPPOSITE HAND
OPNG	OPENING
OPP	OPPOSITE
OPR	OPERATING / OPERABLE
ORD	OVERFLOW ROOF DRAIN
OZ	OUNCE
PA	PUBLIC ADDRESS
PAR	PARALLEL
PART	PARTIAL
PAV	PAVERS
PB	PARTICLE BOARD
PCC	PRECAST CONCRETE
PERF	PERFORATED
PERP	PERPENDICULAR
PL	PLASTIC LAMINATE
PLA	PLASTER
PLAM	PLASTIC LAMINATE
PLBG	PLUMBING
PLYWD	PLYWOOD
PNEU	PNEUMATIC
POL	POLISHED
PPV	PRECAST CONCRETE PAVERS
PR	PAIR
PREFAB	PREFABRICATE(D)
PROP	PROPERTY
PT	PAINT(ED)
PTN	PARTITION
PVC	POLYVINYL CHLORIDE
PVG	PAVING
PWR	POWER
QT	QUARRY TILE
QTY	QUANTITY
R	RISER
RA	RETURN AIR
RAD	RADIUS
RB	RESILIENT BASE
RC	REINFORCED CONCRETE
RD	ROOF DRAIN
RECPT	RECEPTACLE
RECT	RECTANGLE
REF	REFERENCE
REINF	REINFORCE(D, -ING, -MENT)
REQD	REQUIRED
RES	EPOXY-RESIN TERRAZZO
REV	REVISED / REVISION
RF	RESILIENT FLOORING
RFA	ROOFING ACCESSORIES
RH	RIGHT HAND
RM	ROOM
RMX	RESIN MATRIX
RND	ROUND(ED)
RO	ROUGH OPENING
ROW	RIGHT OF WAY
RS	ROOFING SYSTEM
RSF	RESILIENT SHEET FLASHING
SA	SUPPLY AIR
SAN	SANITARY
SB	SPLASH BLOCK
SCHED	SCHEDULE(D)
SE	SEALANT
SECT	SECTION
SGFT	STRUCTURAL GLAZED FACING TILE
SHR	SHOWER
SHT	SHEET
SHTHG	SHEATHING
SIM	SIMILAR
SKC PLAS	BONDED GYPSUM SKIM COAT PLASTER
SLDG	SLIDE / SLIDING
SMR	SHEET METAL ROOFING
SPC	SYNTHETIC POLYMER COUNTERTOP
SPEC	SPECIFICATION(S)
SQ	SQUARE
SQ FT	SQUARE FOOT / FEET
SSM	SOLID SURFACE MATERIAL
SS	STAINLESS STEEL
ST	STONE
STC	SOUND TRANSMISSION CLASS
STD	STANDARD
STL	STEEL
STOR	STORAGE
STRUCT	STRUCTURE / STRUCTURAL
SURF MTD	SURFACE MOUNTED
SUSP	SUSPEND(ED) / SUSPENSION
SWBD	SWITCHBOARD
SYMM	SYMMETRICAL
T	TREAD
T/	TOP OF
TA	TOILET ACCESSORY(IES)
TC	TRAFFIC COATING
TD	TRENCH DRAIN
TEL	TELEPHONE
TEMP	TEMPERATURE
TER	TERRAZZO
THK	THICK(NESS)
THRES	THRESHOLD
TOC	TOP OF CURB
TOPO	TOPOGRAPHY MAP
TRANS	TRANSOM
TRAV	TRAVERTINE
TV	TELEVISION
TYP	TYPICAL
UC	UNDERCUT
UNFIN	UNFINISHED
UNO	UNLESS NOTED OTHERWISE
UPS	UNINTERRUPTED POWER SUPPLY
VAC	VACUUM
VERT	VERTICAL
VEST	VESTIBULE
VIF	VERIFY IN FIELD
VNR	VENEER
VNR PLAS	VENEER PLASTER
VOL	VOLUME
W/	WITH
W/O	WITHOUT
WB	WOOD BASE
WBL	WOOD BLOCKING
WCV	WALL COVERING
WD	WOOD
WDF	WOOD DOOR AND FRAME
WH	WALL HYDRANT
WI	WROUGHT IRON
WKP	WALKWAY PADS
WP	WORK POINT
WPMU	WATERPROOF MEMBRANE/UNDERLAYMENT
WPS	WATERPROOFING SYSTEM
WR	WEATHER RESISTANT
WRB	WARDROBE
WS	WEATHERSTRIP(PING)
WT	WEIGHT
WTR	WINDOW TREATMENT
WV	WOOD VENEER
WWF	WELDED WIRE FABRIC

DESIGN BY:										
DRAWN BY:										
CHECKED BY:										
APPROVED BY:		4	7/3/2023	ISSUED FOR BID	KP	KP	NL			
CDOT/APPROVED BY:		NO.	DATE	REVISIONS	DES.	DRW.	CHK.	DCCO	CDOT	

TranSystems
TRANSYSTEMS
222 SOUTH RIVERSIDE PLAZA SUITE 610
CHICAGO, ILLINOIS 60606

LICENSED ARCHITECT
QUENTIN PETERSEN
001.024088
STATE OF ILLINOIS

CDOT
CHICAGO DEPARTMENT OF TRANSPORTATION
DIVISION OF ENGINEERING

STATE / LAKE LOOP ELEVATED STATION
200 NORTH STATE STREET, CHICAGO, IL 60601

SPEC. NO.

SYMBOLS & ABBREVIATIONS

DRAWING NO.
AS-001

CDOT PROJECT D-1-209 | DATE: 9/9/2022 | REVISION NO.4

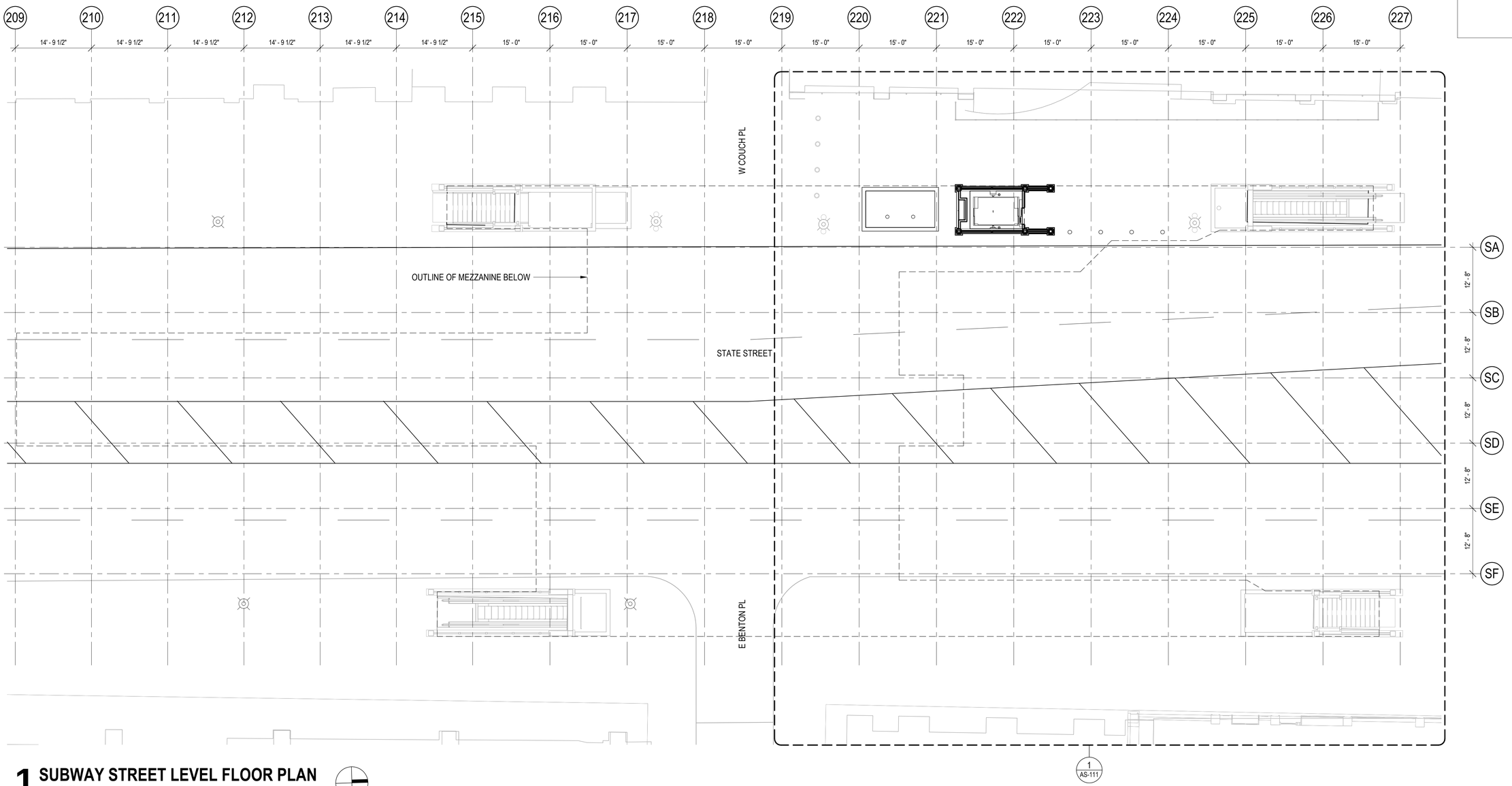

1 SUBWAY STREET LEVEL FLOOR PLAN

1" = 10'-0"

DESIGN BY:										
DRAWN BY:										
CHECKED BY:										
APPROVED BY:		4	7/3/2023	ISSUED FOR BID	KP	KP	NL			
CDOT/APPROVED BY:		NO.	DATE	REVISIONS	DES.	DRW.	CHK.	DCCO	CDOT	

TRANSYSTEMS
222 SOUTH RIVERSIDE PLAZA SUITE 610
CHICAGO, ILLINOIS 60606

LICENSED ARCHITECT
QUENTIN PETERSEN
001.024088
STATE OF ILLINOIS

CDOT
CHICAGO DEPARTMENT OF TRANSPORTATION
DIVISION OF ENGINEERING

STATE / LAKE LOOP ELEVATED STATION
200 NORTH STATE STREET, CHICAGO, IL 60601

SUBWAY STREET LEVEL FLOOR PLAN

CDOT PROJECT D-1-209

DATE: 9/9/2022

SPEC. NO.

DRAWING NO.
AS-101

REVISION NO.4

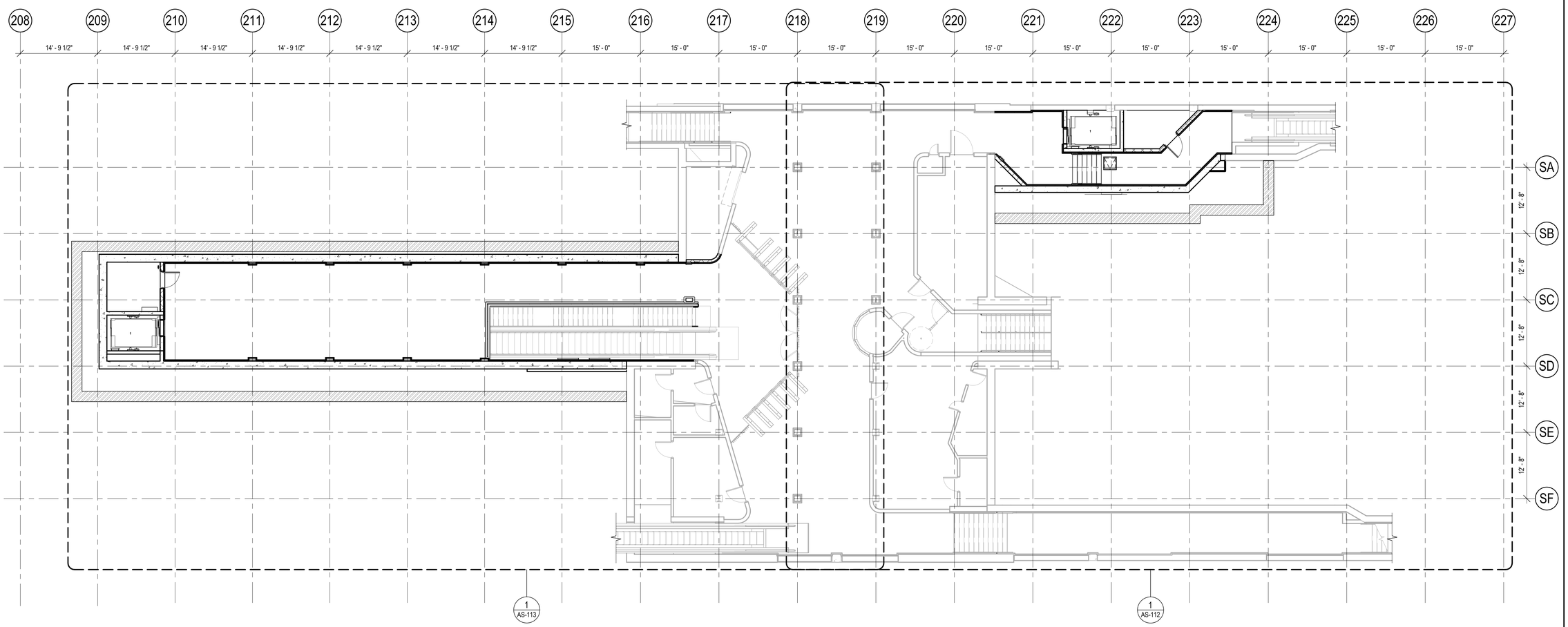

1 SUBWAY MEZZANINE LEVEL PLAN

1" = 10'-0"

NO.	DATE	REVISIONS	DES.	DRW.	CHK.	DCCO	CDOT
4	7/3/2023	ISSUED FOR BID	KP	KP	NL		

DESIGN BY:
DRAWN BY:
CHECKED BY:
APPROVED BY:
CDOT/APPROVED BY:

TRANSYSTEMS
222 SOUTH RIVERSIDE PLAZA SUITE 610
CHICAGO, ILLINOIS 60606

LICENSED ARCHITECT
QUENTIN PETERSEN
001.024068
STATE OF ILLINOIS

CDOT
CHICAGO DEPARTMENT OF TRANSPORTATION
DIVISION OF ENGINEERING

STATE / LAKE LOOP ELEVATED STATION
200 NORTH STATE STREET, CHICAGO, IL 60601

SUBWAY MEZZANINE FLOOR PLAN

CDOT PROJECT D-1-209

DATE: 9/9/2022

SPEC. NO.

DRAWING NO.
AS-102

REVISION NO. 4

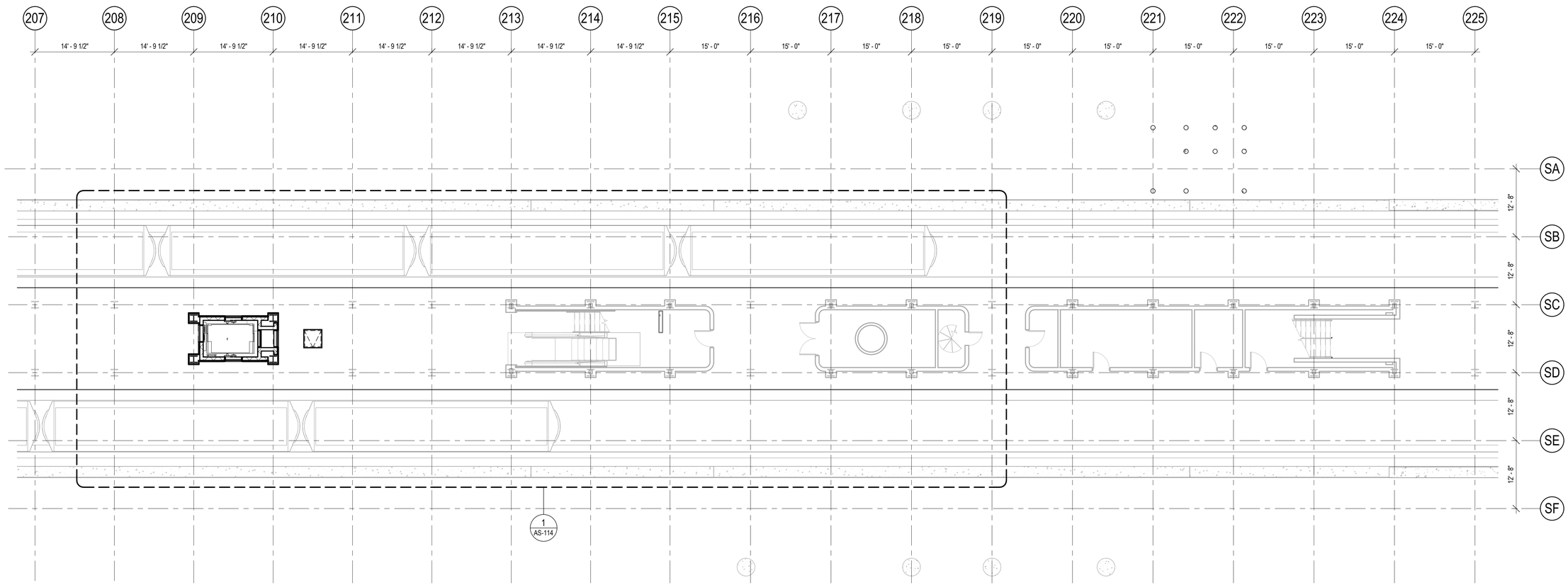

1 SUBWAY PLATFORM LEVEL FLOOR PLAN

1" = 10'-0"

DESIGN BY:										
DRAWN BY:										
CHECKED BY:										
APPROVED BY:		4	7/3/2023	ISSUED FOR BID	KP	KP	NL			
CDOT/APPROVED BY:		NO.	DATE	REVISIONS	DES.	DRW.	CHK.	DCCO	CDOT	

TRANSYSTEMS
222 SOUTH RIVERSIDE PLAZA SUITE 610
CHICAGO, ILLINOIS 60606

LICENSED ARCHITECT
QUENTIN PETERSEN
001.024068
STATE OF ILLINOIS

CHICAGO DEPARTMENT OF TRANSPORTATION
DIVISION OF ENGINEERING

STATE / LAKE LOOP ELEVATED STATION
200 NORTH STATE STREET, CHICAGO, IL 60601

SUBWAY PLATFORM FLOOR PLAN

CDOT PROJECT D-1-209

DATE: 9/9/2022

SPEC. NO.

DRAWING NO. AS-103

REVISION NO. 4

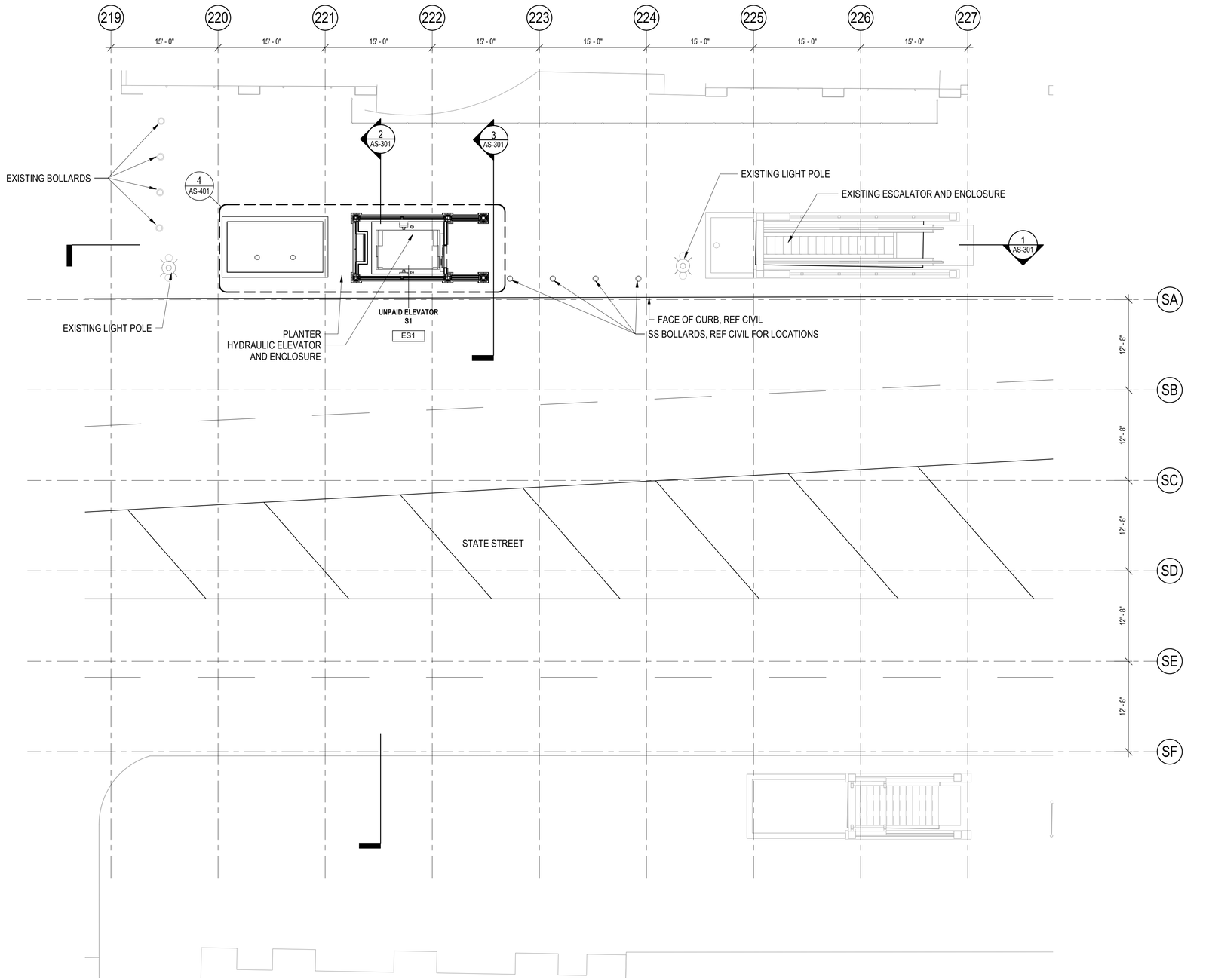

1 SUBWAY STREET LEVEL FLOOR PLAN NORTH

1/8" = 1'-0"

DESIGN BY:										
DRAWN BY:										
CHECKED BY:										
APPROVED BY:		4	7/3/2023	ISSUED FOR BID	KP	KP	NL			
CDOT/APPROVED BY:		NO.	DATE	REVISIONS	DES.	DRW.	CHK.	DCCO	CDOT	

TranSystems
TRANSYSTEMS
222 SOUTH RIVERSIDE PLAZA SUITE 610
CHICAGO, ILLINOIS 60606

LICENSED ARCHITECT
QUENTIN PETERSEN
001.024068
STATE OF ILLINOIS

CDOT
CHICAGO DEPARTMENT
OF TRANSPORTATION
DIVISION OF ENGINEERING

STATE / LAKE LOOP ELEVATED STATION
200 NORTH STATE STREET, CHICAGO, IL 60601

SUBWAY ENLARGED STREET LEVEL PLAN - NORTH

CDOT PROJECT D-1-209

DATE: 9/9/2022

SPEC. NO.

DRAWING NO.
AS-111

REVISION NO.4

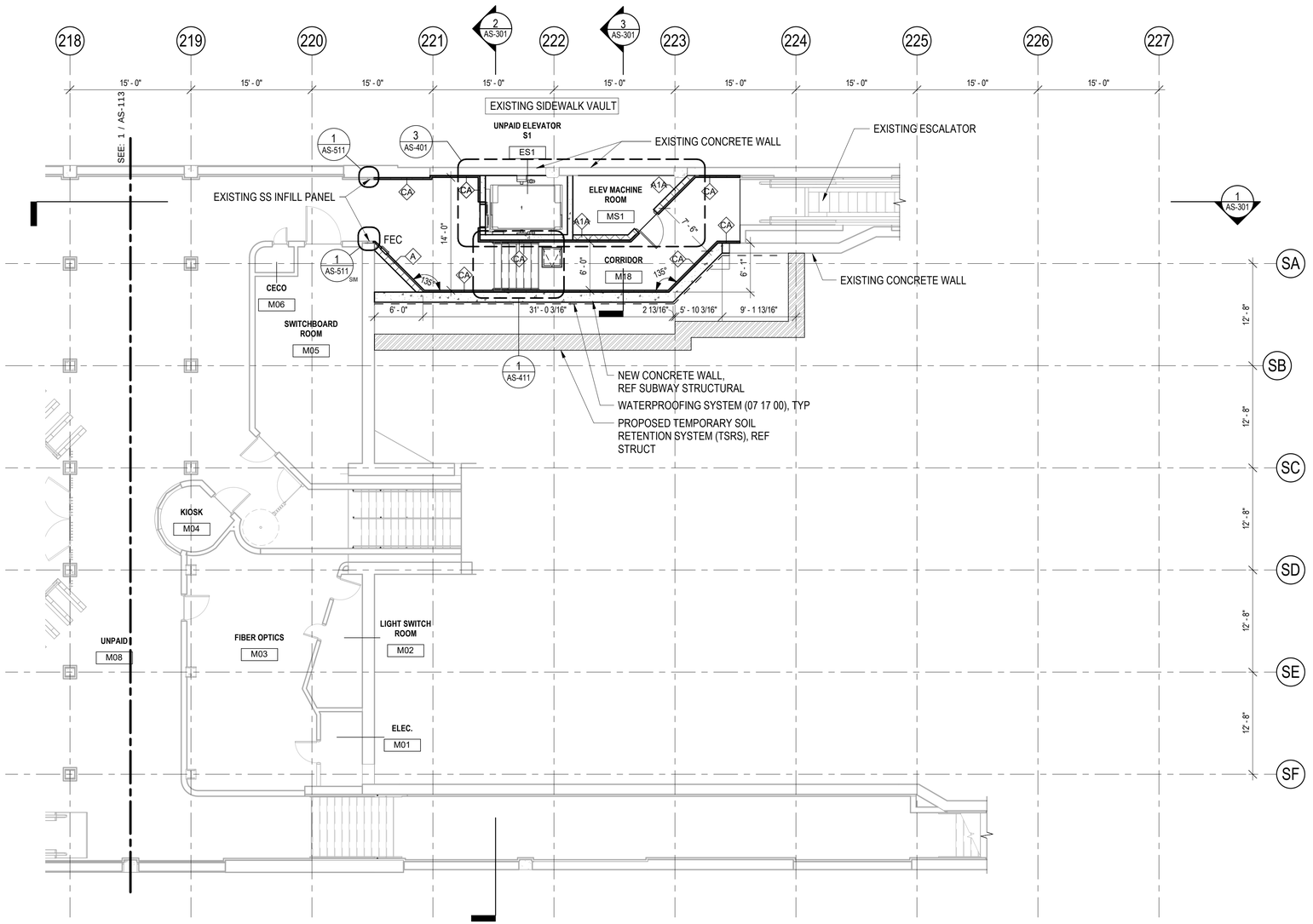

NOTES:
1. FLOOR FINISHES, SEE SHEET AS-431
2. WALL FINISHES, SEE SHEETS AS-433 THROUGH AS-437

1 SUBWAY MEZZANINE LEVEL PLAN NORTH

1/8" = 1'-0"

DESIGN BY:										
DRAWN BY:										
CHECKED BY:										
APPROVED BY:		4	7/3/2023	ISSUED FOR BID	KP	KP	NL			
CDOT/APPROVED BY:		NO.	DATE	REVISIONS	DES.	DRW.	CHK.	DCCO	CDOT	

TRANSYSTEMS
222 SOUTH RIVERSIDE PLAZA SUITE 610
CHICAGO, ILLINOIS 60606

LICENSED ARCHITECT
QUENTIN PETERSEN
001.024068
STATE OF ILLINOIS

CHICAGO DEPARTMENT OF TRANSPORTATION
DIVISION OF ENGINEERING

STATE / LAKE LOOP ELEVATED STATION
200 NORTH STATE STREET, CHICAGO, IL 60601

SUBWAY ENLARGED MEZZANINE LEVEL PLAN - NORTH

CDOT PROJECT D-1-209 | DATE: 9/9/2022

SPEC. NO.

DRAWING NO. AS-112

REVISION NO. 4

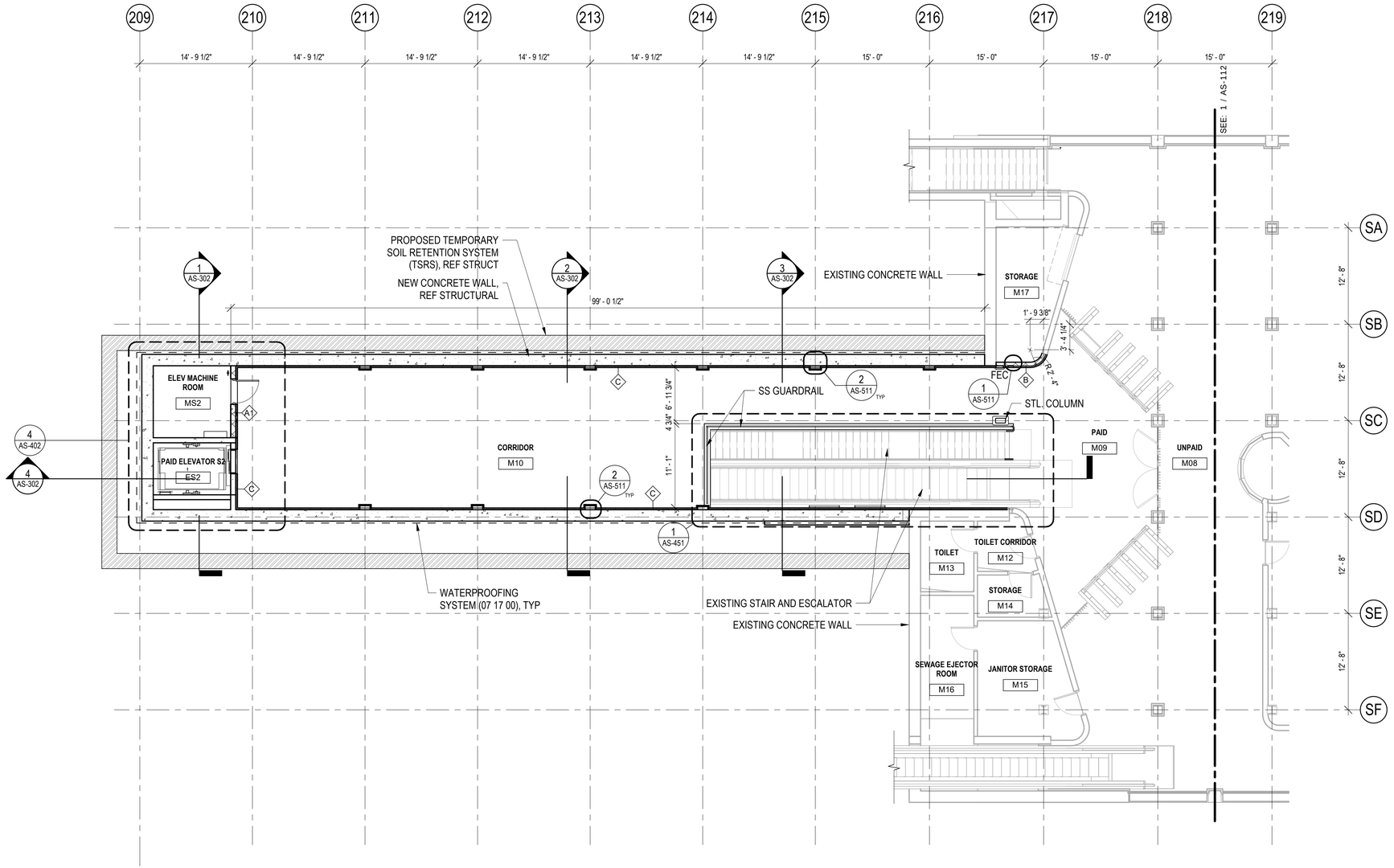

NOTES:
1. FLOOR FINISHES, SEE SHEET AS-431
2. WALL FINISHES, SEE SHEETS AS-433 THROUGH AS-437

1 SUBWAY MEZZANINE LEVEL PLAN SOUTH

1/8" = 1'-0"

DESIGN BY:										
DRAWN BY:										
CHECKED BY:										
APPROVED BY:		4	7/3/2023	ISSUED FOR BID	KP	KP	NL			
CDOT/APPROVED BY:		NO.	DATE	REVISIONS	DES.	DRW.	CHK.	DCCO	CDOT	

TranSystems
TRANSYSTEMS
222 SOUTH RIVERSIDE PLAZA SUITE 610
CHICAGO, ILLINOIS 60606

LICENSED ARCHITECT
QUENTIN PETERSEN
001.024068
STATE OF ILLINOIS

CDOT
CHICAGO DEPARTMENT OF TRANSPORTATION
DIVISION OF ENGINEERING

STATE / LAKE LOOP ELEVATED STATION
200 NORTH STATE STREET, CHICAGO, IL 60601

SUBWAY ENLARGED MEZZANINE LEVEL PLAN - SOUTH

CDOT PROJECT D-1-209 | DATE: 9/9/2022

SPEC. NO.

DRAWING NO. AS-113

REVISION NO.4

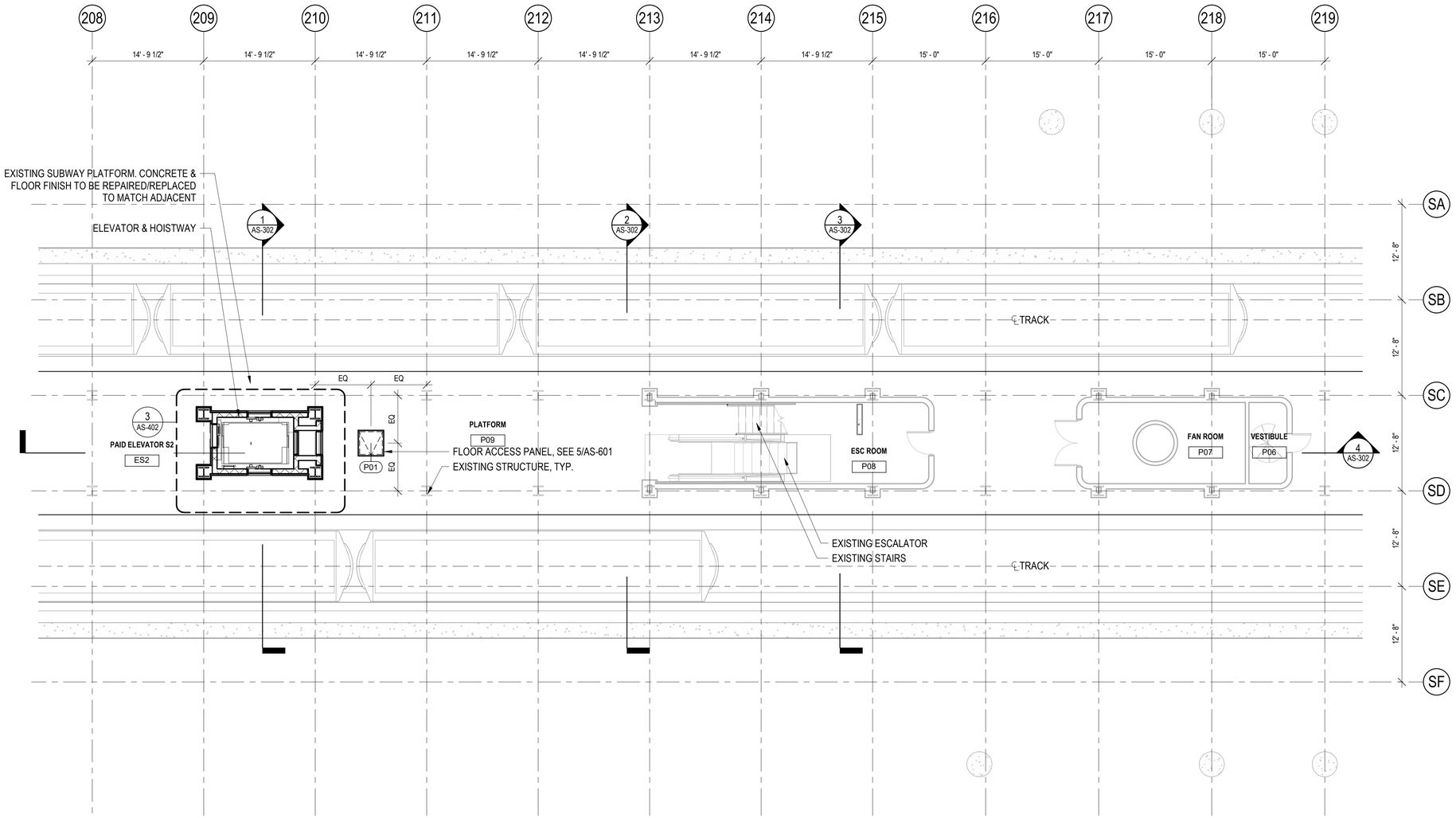

1 SUBWAY PLATFORM LEVEL FLOOR PLAN SOUTH

1/8" = 1'-0"

NOTES:
1. FLOOR FINISHES, SEE SHEET AS-431
2. WALL FINISHES, SEE SHEETS AS-433 THROUGH AS-437

DESIGN BY:										
DRAWN BY:										
CHECKED BY:										
APPROVED BY:		4	7/3/2023	ISSUED FOR BID	KP	KP	NL			
CDOT/APPROVED BY:		NO.	DATE	REVISIONS	DES.	DRW.	CHK.	DCCO	CDOT	

TRANSYSTEMS
222 SOUTH RIVERSIDE PLAZA SUITE 610
CHICAGO, ILLINOIS 60606

LICENSED ARCHITECT
QUENTIN PETERSEN
001.024088
STATE OF ILLINOIS

CHICAGO DEPARTMENT OF TRANSPORTATION
DIVISION OF ENGINEERING

STATE / LAKE LOOP ELEVATED STATION
200 NORTH STATE STREET, CHICAGO, IL 60601

SUBWAY ENLARGED PLATFORM LEVEL PLAN - SOUTH

CDOT PROJECT D-1-209 | DATE: 9/9/2022

SPEC. NO.

DRAWING NO. AS-114

REVISION NO.4

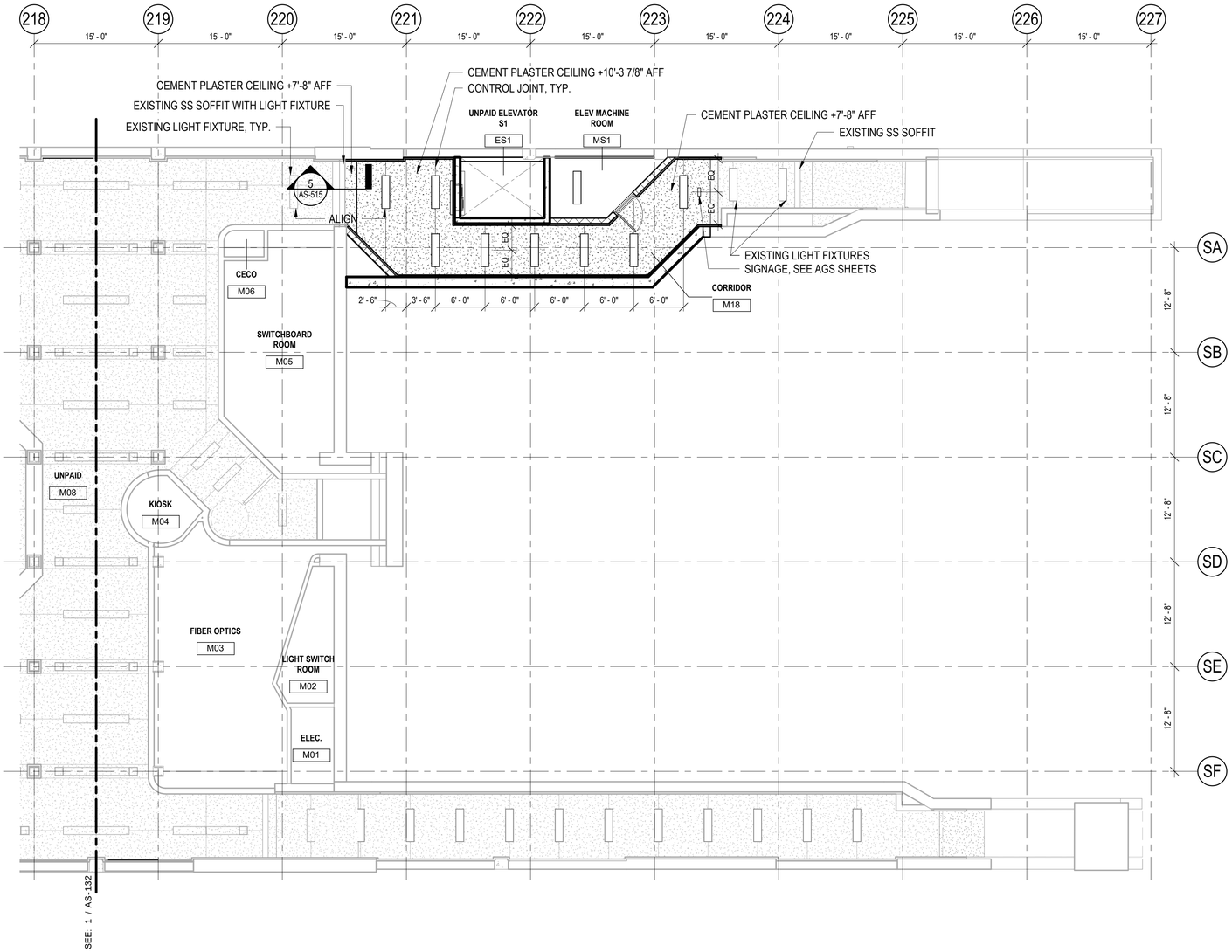

NOTES:
1. REFER TO ELECTRICAL FOR LIGHT FIXTURES.
2. REFER TO COMMUNICATION FOR SECURITY AND COMMUNICATION EQUIPMENT.
3. ALL CONDUIT RUNS TO BE CONCEALED IN PUBLIC AREAS, TYP.
4. EXISTING CEILING TO BE REPAIRED/REPLACED AS NEEDED TO ACCOMMODATE NEW WORK.

CEILING MATERIAL LEGEND

- OPEN TO STRUCTURE
- CEMENT PLASTER

1 MEZZANINE REFLECTED CEILING PLAN NORTH

1/8" = 1'-0"

DESIGN BY:										
DRAWN BY:										
CHECKED BY:										
APPROVED BY:		4	7/3/2023	ISSUED FOR BID	KP	KP	NL			
CDOT/APPROVED BY:		NO.	DATE	REVISIONS	DES.	DRW.	CHK.	DCCO	CDOT	

TRANSYSTEMS
222 SOUTH RIVERSIDE PLAZA SUITE 610
CHICAGO, ILLINOIS 60606

LICENSED ARCHITECT
QUENTIN PETERSEN
001.024088
STATE OF ILLINOIS

CHICAGO DEPARTMENT OF TRANSPORTATION
DIVISION OF ENGINEERING

STATE / LAKE LOOP ELEVATED STATION
200 NORTH STATE STREET, CHICAGO, IL 60601

SUBWAY MEZZANINE REFLECTED CEILING PLAN - NORTH

CDOT PROJECT D-1-209

DATE: 9/9/2022

SPEC. NO.

DRAWING NO. AS-131

REVISION NO.4

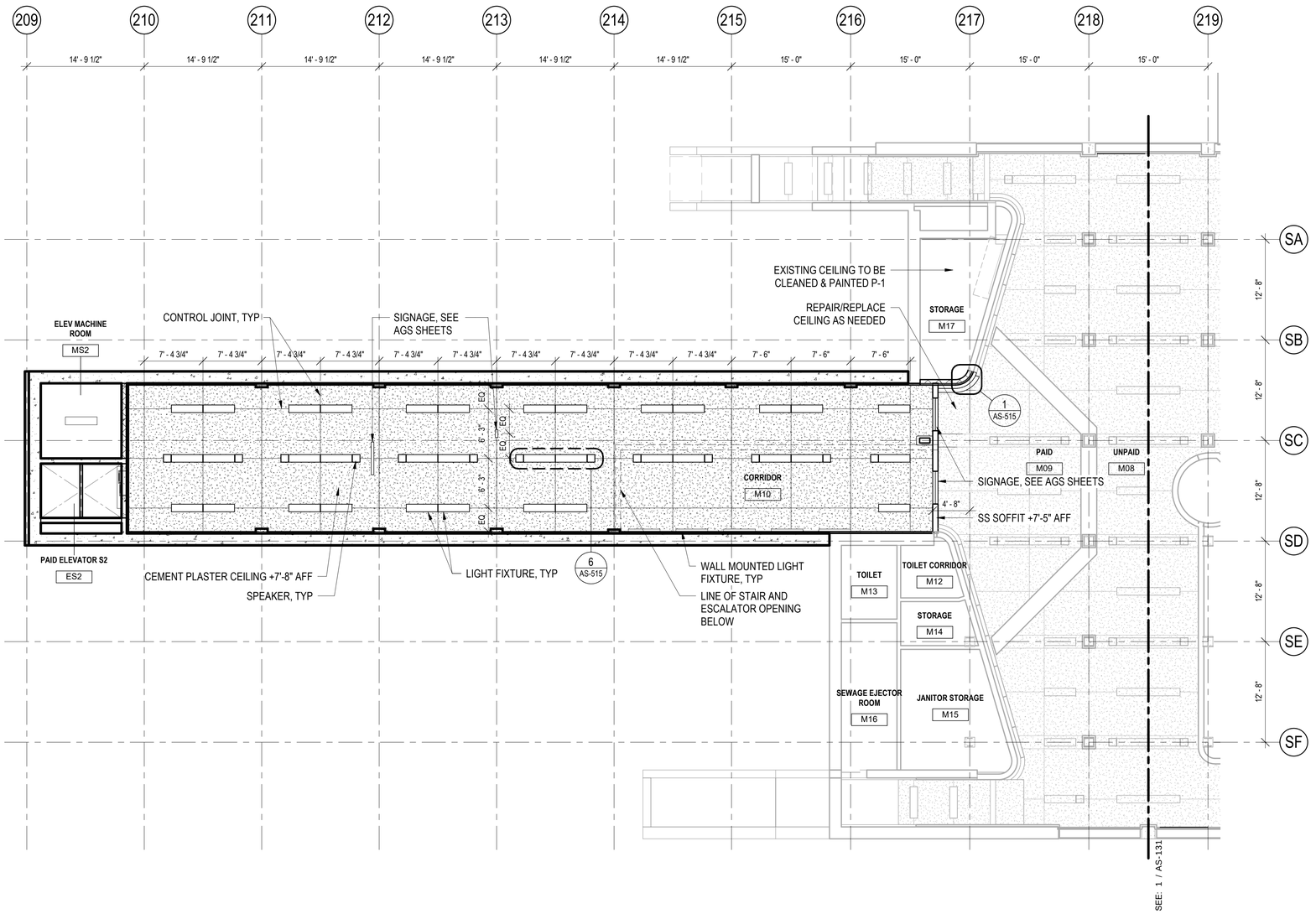

NOTES:
1. REFER TO ELECTRICAL FOR LIGHT FIXTURES.
2. REFER TO COMMUNICATION FOR SECURITY AND COMMUNICATION EQUIPMENT.
3. ALL CONDUIT RUNS TO BE CONCEALED IN PUBLIC AREAS, TYP.
4. EXISTING CEILING TO BE REPAIRED/REPLACED AS NEEDED TO ACCOMMODATE NEW WORK.

CEILING MATERIAL LEGEND

- OPEN TO STRUCTURE
- CEMENT PLASTER

1 MEZZANINE REFLECTED CEILING PLAN SOUTH

1/8" = 1'-0"

DESIGN BY:										
DRAWN BY:										
CHECKED BY:										
APPROVED BY:		4	7/3/2023	ISSUED FOR BID	KP	KP	NL			
CDOT/APPROVED BY:		NO.	DATE	REVISIONS	DES.	DRW.	CHK.	DCCO	CDOT	

TRANSYSTEMS
222 SOUTH RIVERSIDE PLAZA SUITE 610
CHICAGO, ILLINOIS 60606

LICENSED ARCHITECT
QUENTIN PETERSEN
001.024068
STATE OF ILLINOIS

CDOT
CHICAGO DEPARTMENT OF TRANSPORTATION
DIVISION OF ENGINEERING

STATE / LAKE LOOP ELEVATED STATION
200 NORTH STATE STREET, CHICAGO, IL 60601

SUBWAY MEZZANINE REFLECTED CEILING PLAN - SOUTH

SPEC. NO.

DRAWING NO. AS-132

CDOT PROJECT D-1-209

DATE: 9/9/2022

REVISION NO.4

NOTES:
1. REFER TO ELECTRICAL FOR LIGHT FIXTURES.
2. REFER TO COMMUNICATION FOR SECURITY AND COMMUNICATION EQUIPMENT.
3. ALL CONDUIT RUNS TO BE CONCEALED IN PUBLIC AREAS, TYP.
4. EXISTING CEILING TO BE REPAIRED/REPLACED AS NEEDED TO ACCOMMODATE NEW WORK.

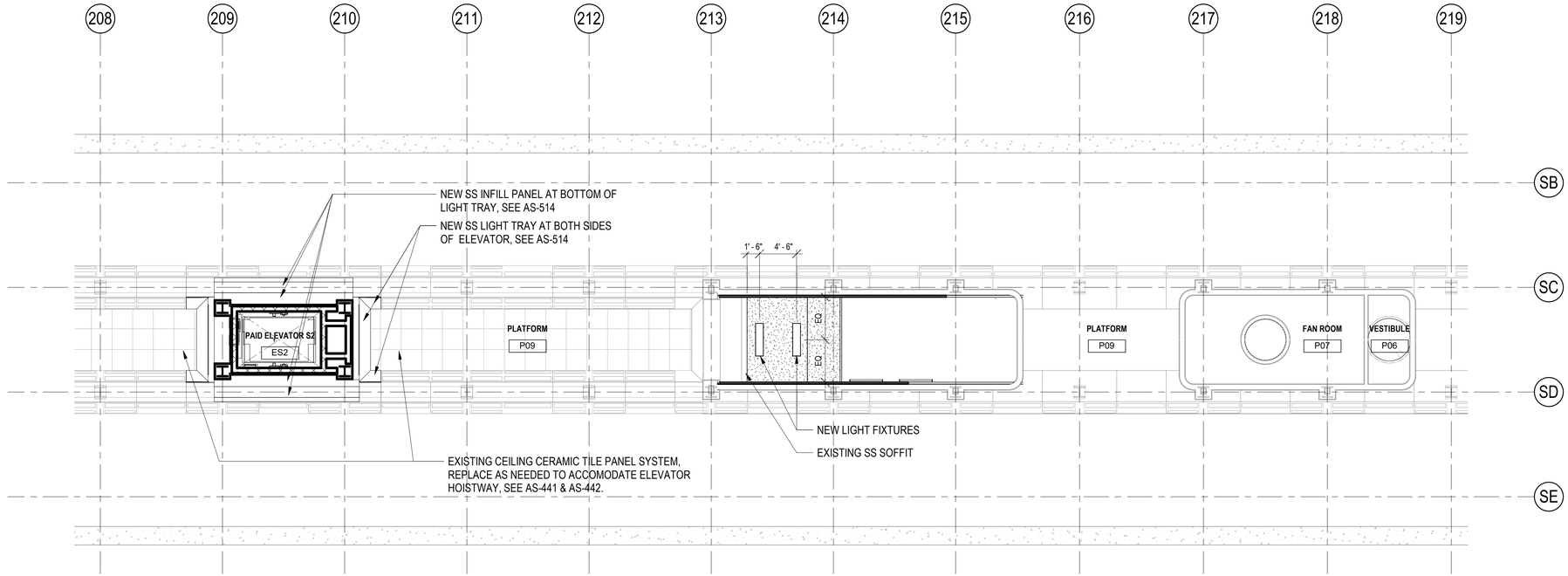

1 PLATFORM REFLECTED CEILING PLAN
1/8" = 1'-0"

CEILING MATERIAL LEGEND
- OPEN TO STRUCTURE
- CEMENT PLASTER
- CERAMIC TILE PANELS

NO.	DATE	REVISIONS	DES.	DRW.	CHK.	DCCO	CDOT
4	7/3/2023	ISSUED FOR BID	KP	KP	NL		

DESIGN BY:
DRAWN BY:
CHECKED BY:
APPROVED BY:
CDOT/APPROVED BY:

TRANSYSTEMS
222 SOUTH RIVERSIDE PLAZA SUITE 610
CHICAGO, ILLINOIS 60606

LICENSED ARCHITECT
QUENTIN PETERSEN
001.024068
STATE OF ILLINOIS

CDOT
CHICAGO DEPARTMENT OF TRANSPORTATION
DIVISION OF ENGINEERING

STATE / LAKE LOOP ELEVATED STATION
200 NORTH STATE STREET, CHICAGO, IL 60601

SUBWAY PLATFORM REFLECTED CEILING PLAN - SOUTH

CDOT PROJECT D-1-209 | DATE: 9/9/2022

SPEC. NO.

DRAWING NO. AS-133

REVISION NO. 4

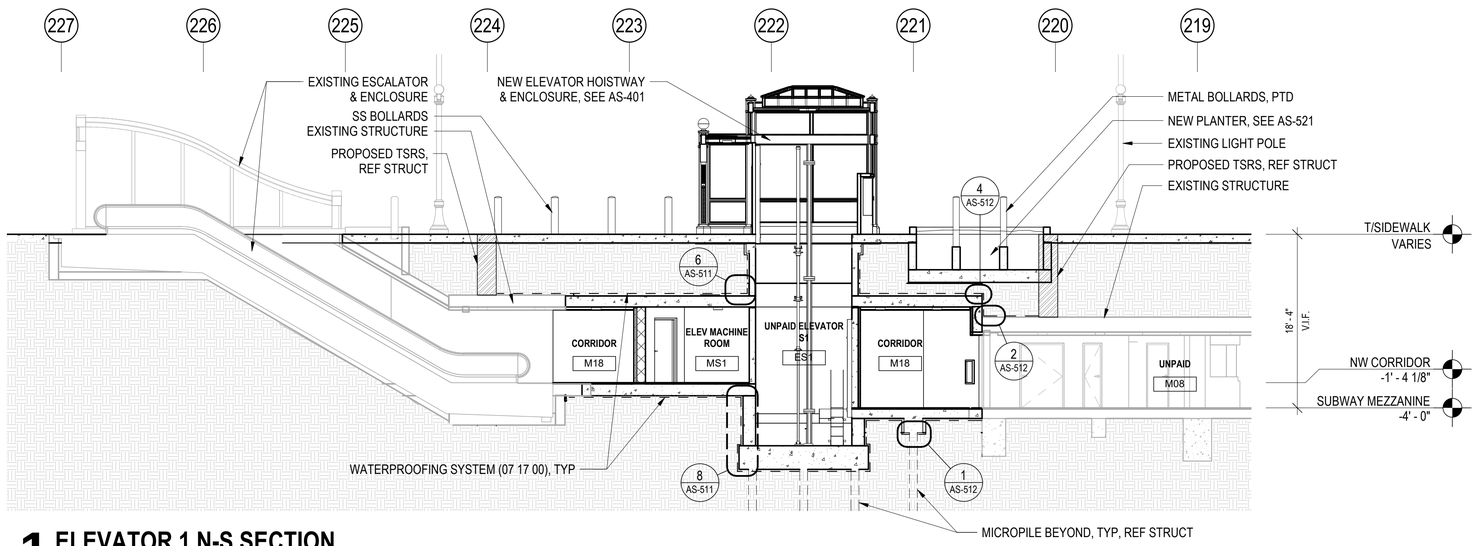

1 ELEVATOR 1 N-S SECTION
1/8" = 1'-0"

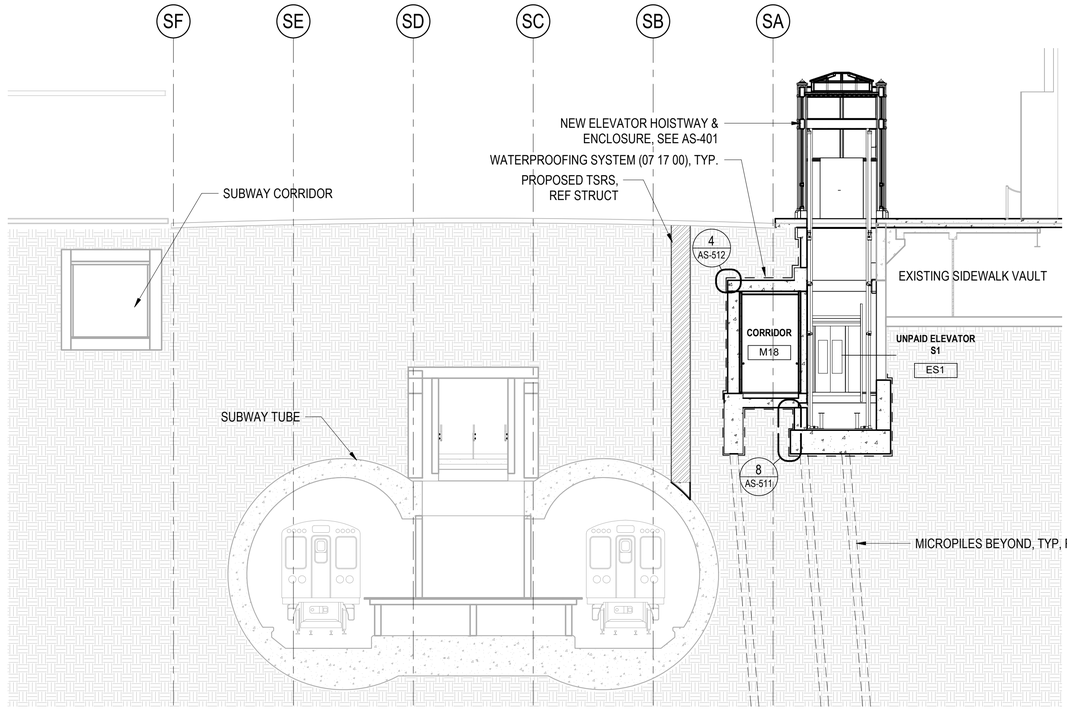

2 ELEVATOR 1 E-W SECTION
1/8" = 1'-0"

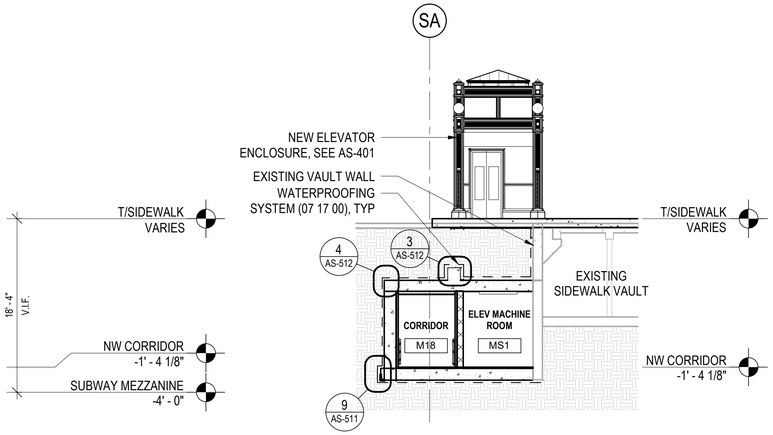

3 SECTION
1/8" = 1'-0"

DESIGN BY:										
DRAWN BY:										
CHECKED BY:										
APPROVED BY:		4	7/3/2023	ISSUED FOR BID	KP	KP	NL			
CDOT/APPROVED BY:		NO.	DATE	REVISIONS	DES.	DRW.	CHK.	DCCO	CDOT	

TRANSYSTEMS
222 SOUTH RIVERSIDE PLAZA SUITE 610
CHICAGO, ILLINOIS 60606

LICENSED ARCHITECT
QUENTIN PETERSEN
001.024088
STATE OF ILLINOIS

CDOT
CHICAGO DEPARTMENT OF TRANSPORTATION
DIVISION OF ENGINEERING

STATE / LAKE LOOP ELEVATED STATION
200 NORTH STATE STREET, CHICAGO, IL 60601

SUBWAY SECTIONS

CDOT PROJECT D-1-209

DATE: 9/9/2022

SPEC. NO.

DRAWING NO.
AS-301

REVISION NO.4

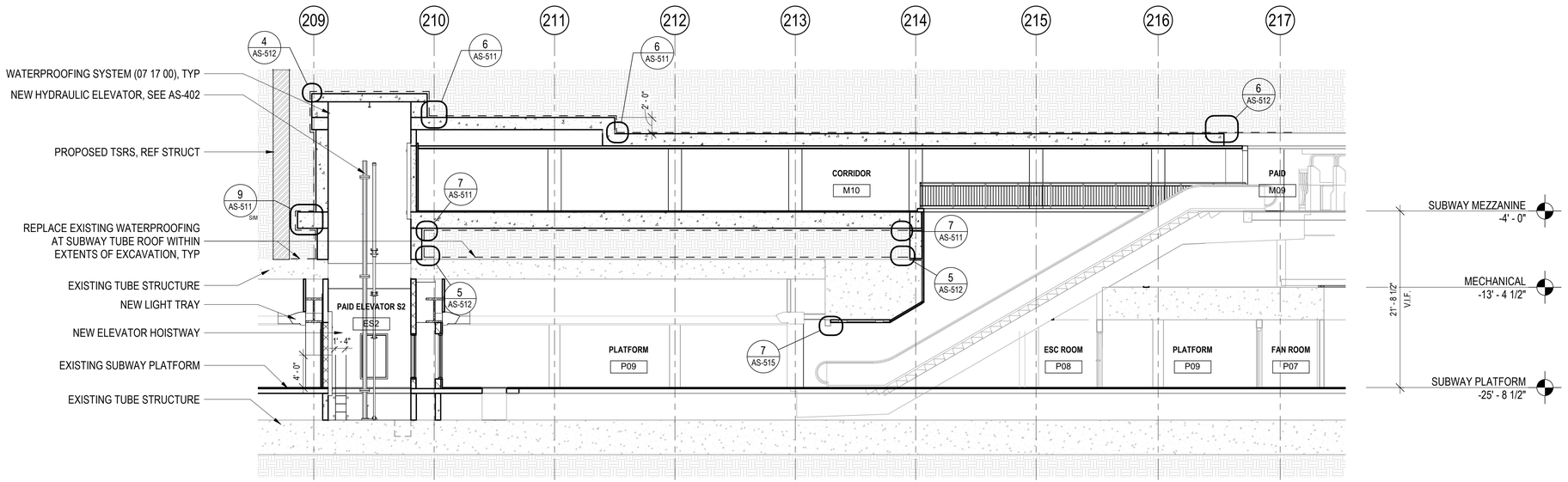

4 ELEVATOR 2 N-S SECTION
1/8" = 1'-0"

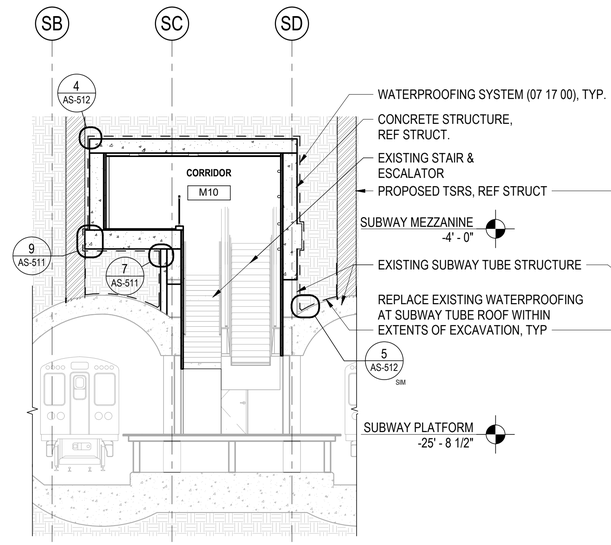

3 SECTION
1/8" = 1'-0"

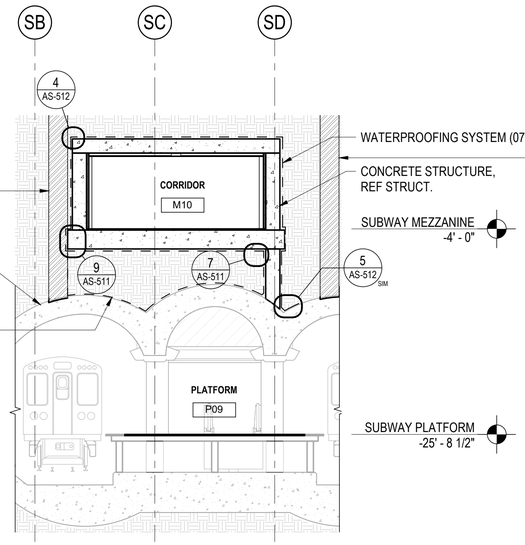

2 SECTION
1/8" = 1'-0"

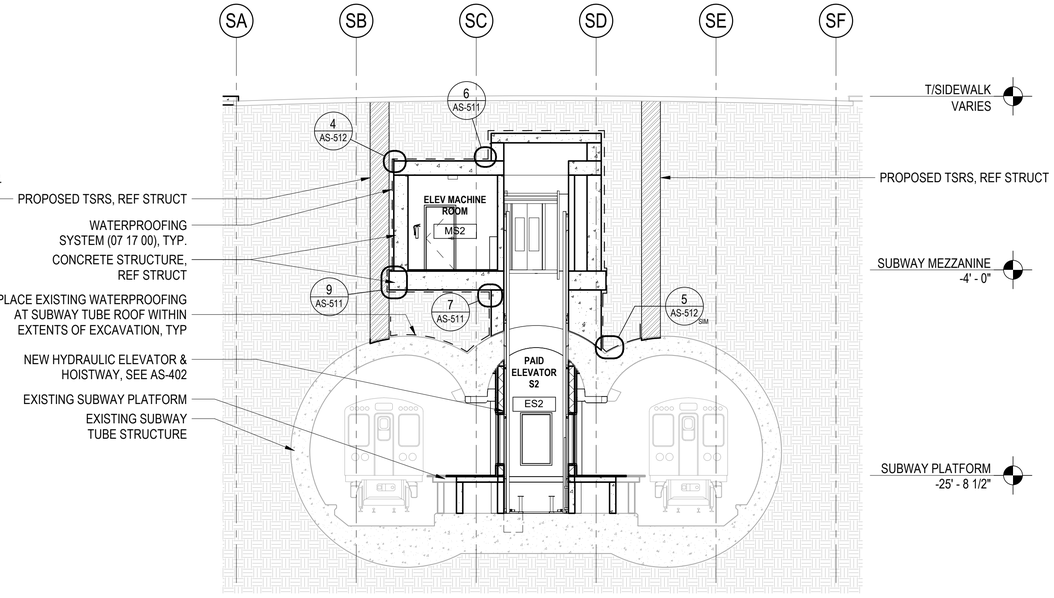

1 ELEVATOR 2 E-W SECTION
1/8" = 1'-0"

DESIGN BY:										
DRAWN BY:										
CHECKED BY:		4	7/3/2023	ISSUED FOR BID						
APPROVED BY:		1	11/04/2022	ISSUED FOR PERMIT REVISION 1						
CDOT/APPROVED BY:		0	9/9/2022	ISSUED FOR PERMIT	KP	KP	NL			
		NO.	DATE	REVISIONS	DES.	DRW.	CHK.	DCCO	CDOT	

TRANSYSTEMS
222 SOUTH RIVERSIDE PLAZA SUITE 610
CHICAGO, ILLINOIS 60606

LICENSED ARCHITECT
QUENTIN PETERSEN
001.024088
STATE OF ILLINOIS

CDOT
CHICAGO DEPARTMENT OF TRANSPORTATION
DIVISION OF ENGINEERING

STATE / LAKE LOOP ELEVATED STATION
200 NORTH STATE STREET, CHICAGO, IL 60601

SPEC. NO.

SUBWAY SECTIONS

DRAWING NO.
AS-302

CDOT PROJECT D-1-209

DATE: 9/9/2022

REVISION NO.4

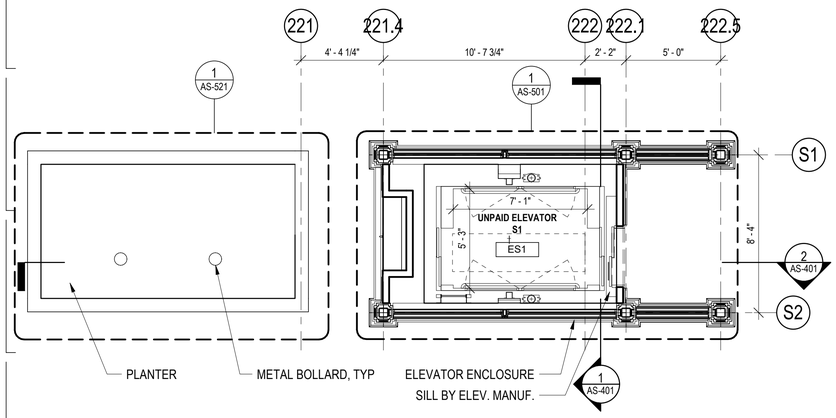

4 ELEVATOR S1 STREET LEVEL PLAN
1/4" = 1'-0"

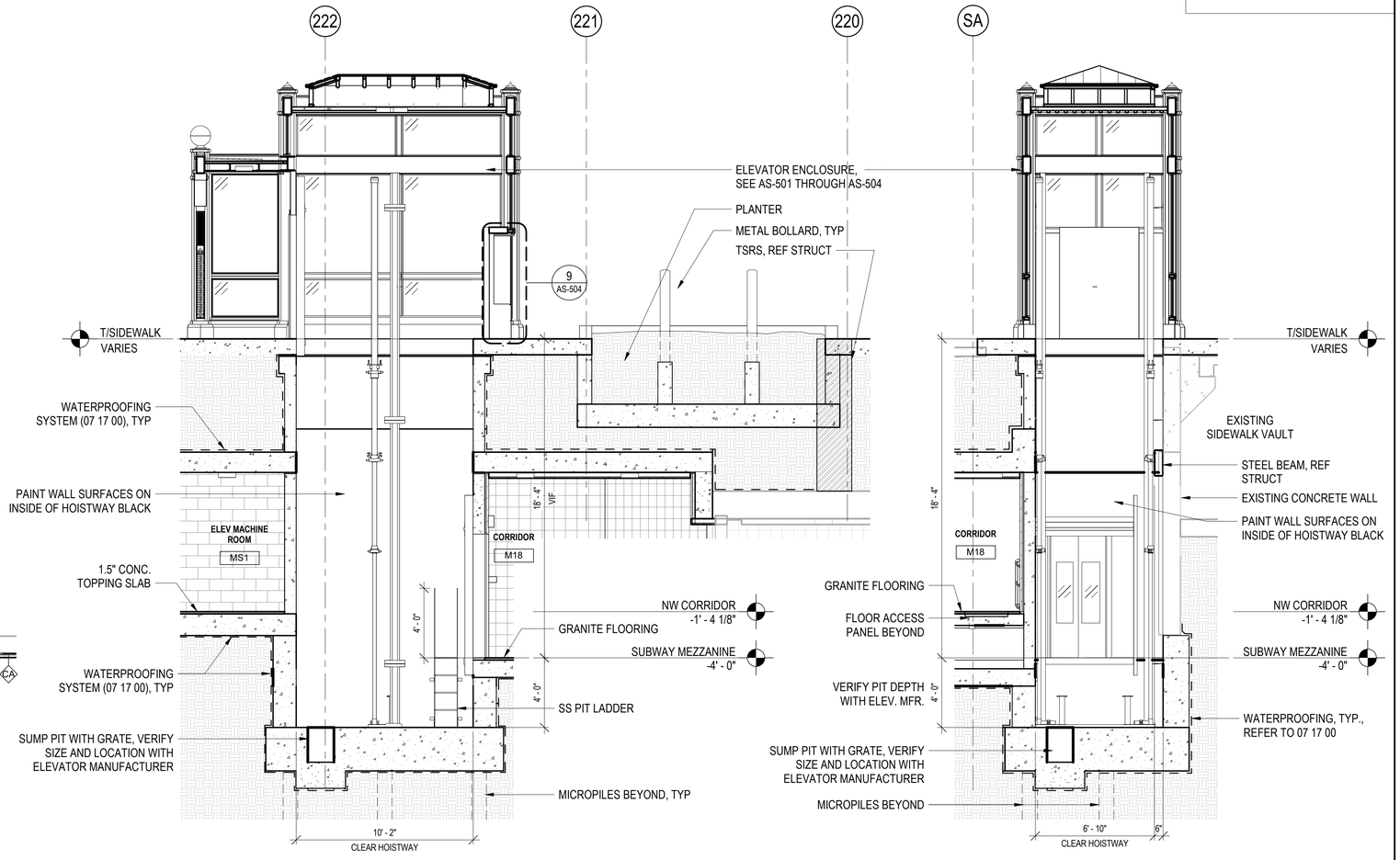

2 ELEVATOR S1 SECTION
1/4" = 1'-0"

1 ELEVATOR S1 SECTION 2
1/4" = 1'-0"

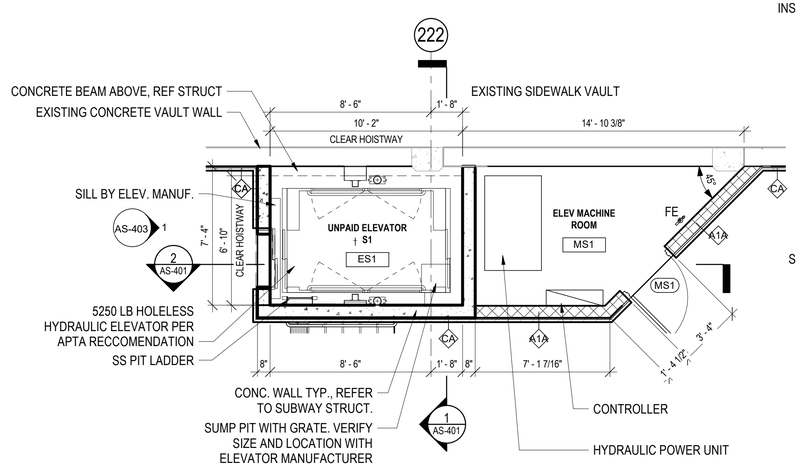

3 ELEVATOR S1 MEZZANINE LEVEL PLAN
1/4" = 1'-0"

DESIGN BY:										TranSystems TRANSYSTEMS 222 SOUTH RIVERSIDE PLAZA SUITE 610 CHICAGO, ILLINOIS 60606
DRAWN BY:										
CHECKED BY:		4	7/3/2023	ISSUED FOR BID						
APPROVED BY:		1	11/04/2022	ISSUED FOR PERMIT REVISION 1						
CDOT/APPROVED BY:		0	9/9/2022	ISSUED FOR PERMIT	KP	KP	NL			
		NO.	DATE	REVISIONS	DES.	DRW.	CHK.	DCCO	CDOT	

LICENSED ARCHITECT
QUENTIN PETERSEN
001.024068
STATE OF ILLINOIS

CDOT
CHICAGO DEPARTMENT
OF TRANSPORTATION
DIVISION OF ENGINEERING

STATE / LAKE LOOP ELEVATED STATION
200 NORTH STATE STREET, CHICAGO, IL 60601

UNPAID ELEVATOR S1 ENLARGED PLANS & SECTIONS

CDOT PROJECT D-1-209 | DATE: 9/9/2022

SPEC. NO.

DRAWING NO.
AS-401

REVISION NO.4

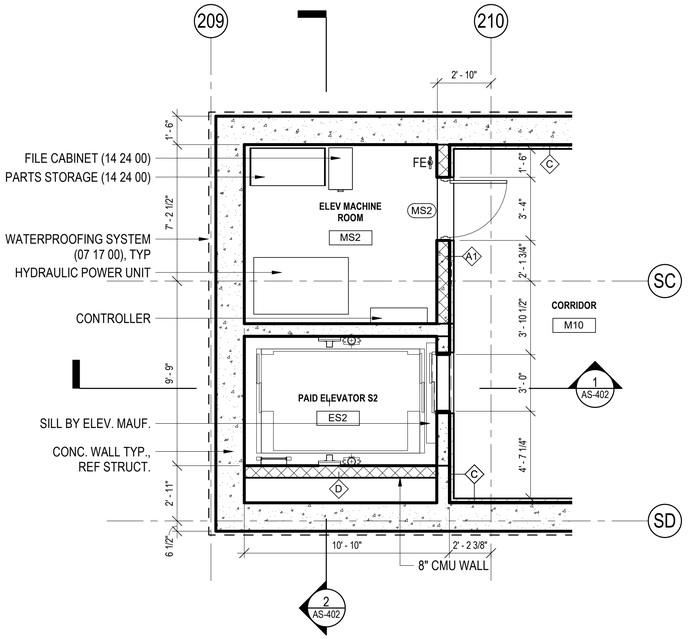

4 ELEVATOR S2 MEZZANINE LEVEL PLAN

1/4" = 1'-0"

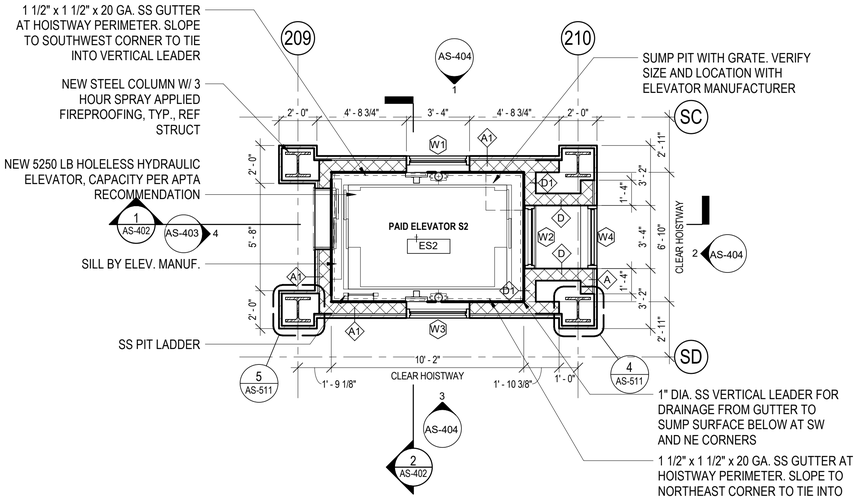

3 ELEVATOR S2 PLATFORM LEVEL PLAN

1/4" = 1'-0"

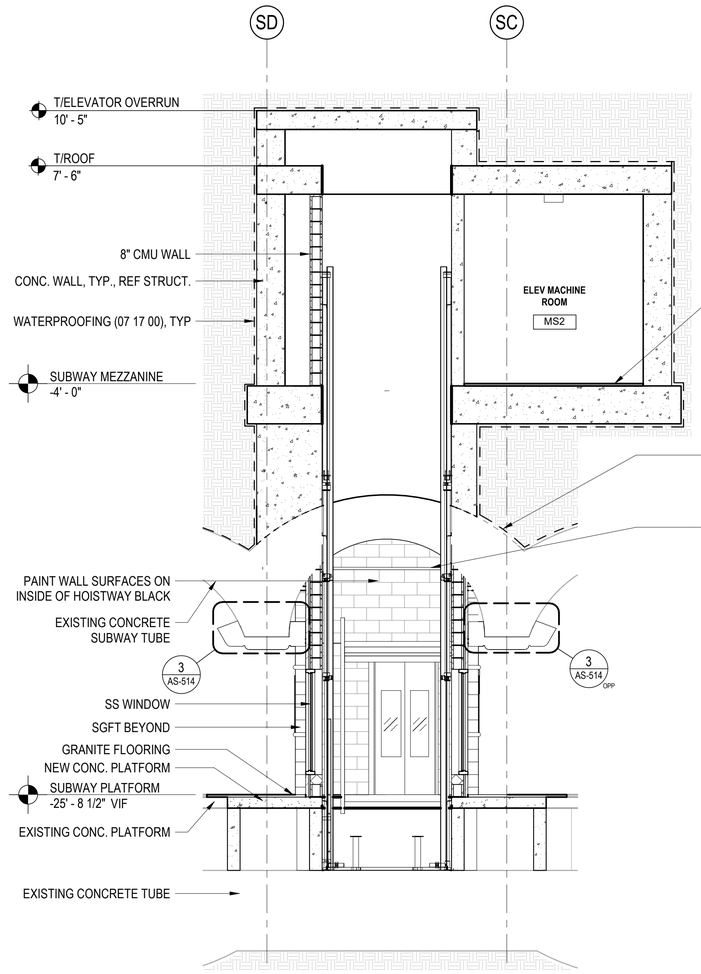

2 ELEVATOR S2 SECTION 2

1/4" = 1'-0"

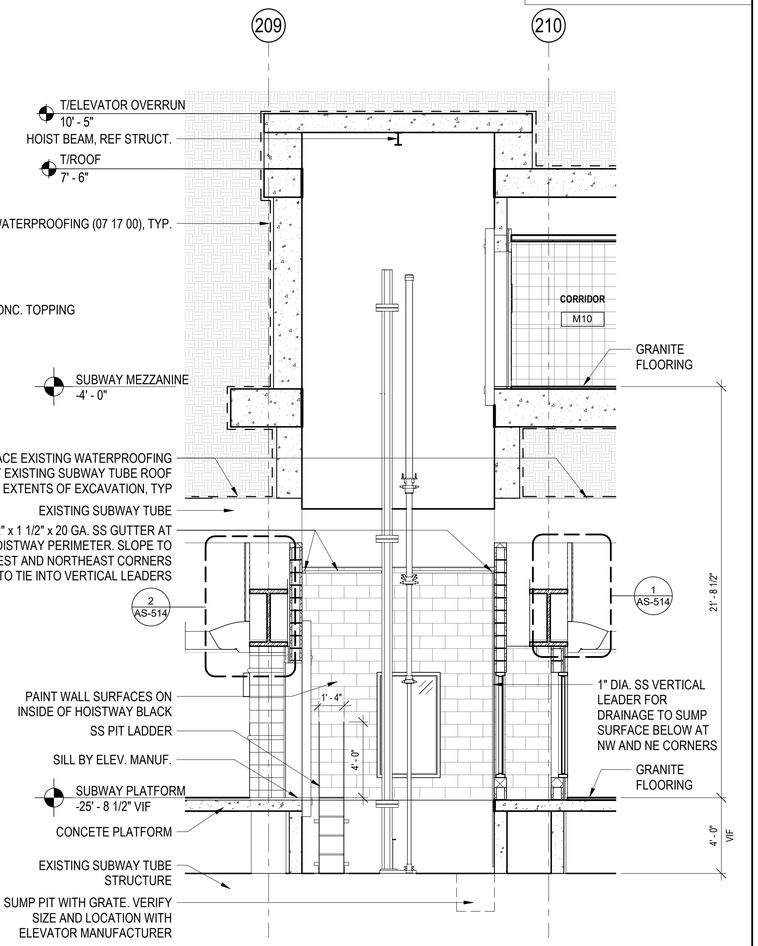

1 ELEVATOR S2 SECTION

1/4" = 1'-0"

DESIGN BY:										
DRAWN BY:										
CHECKED BY:										
APPROVED BY:		4	7/3/2023	ISSUED FOR BID	KP	KP	NL			
CDOT/APPROVED BY:		NO.	DATE	REVISIONS	DES.	DRW.	CHK.	DCCO	CDOT	

TranSystems
TRANSYSTEMS
222 SOUTH RIVERSIDE PLAZA SUITE 610
CHICAGO, ILLINOIS 60606

LICENSED ARCHITECT
QUENTIN PETERSEN
001.024088
STATE OF ILLINOIS

CDOT
CHICAGO DEPARTMENT OF TRANSPORTATION
DIVISION OF ENGINEERING

STATE / LAKE LOOP ELEVATED STATION
200 NORTH STATE STREET, CHICAGO, IL 60601

PAID ELEVATOR S2 ENLARGED PLANS & SECTIONS

CDOT PROJECT D-1-209

DATE: 9/9/2022

SPEC. NO.

DRAWING NO.
AS-402

REVISION NO.4

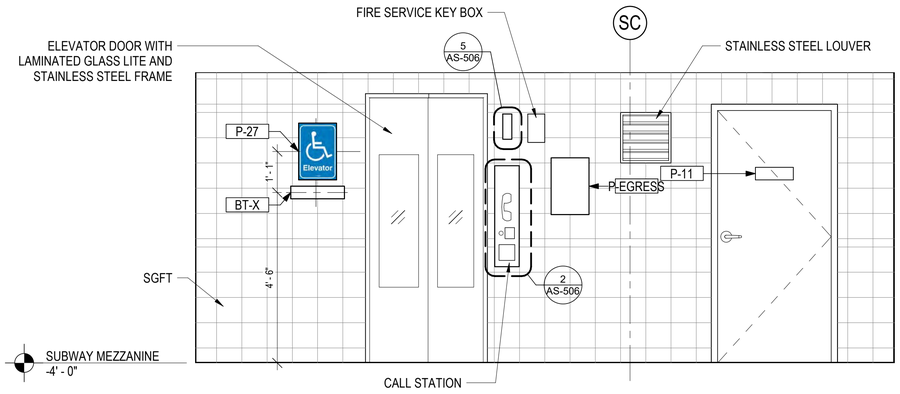

3 ELEVATOR ES2 ENLARGED ELEVATION AT MEZZANINE
1/2" = 1'-0"

2 ELEVATOR ES1 ENLARGED ELEVATION AT STREET
1/2" = 1'-0"

NOTES:
1. REFER TO AS-432 THROUGH AS-436 FOR SGFT PATTERN INFORMATION
2. REFER TO AGS SHEETS FOR SIGNAGE DETAILS

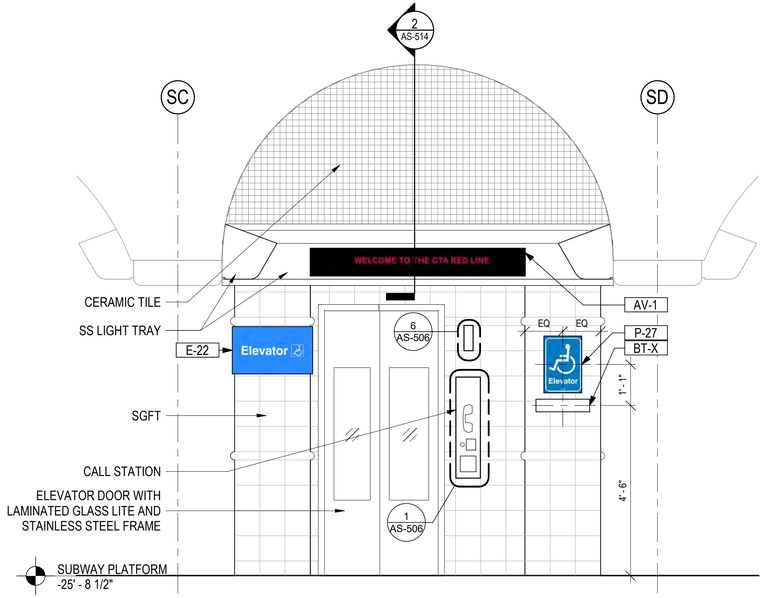

4 ELEVATOR ES2 ENLARGED ELEVATION AT PLATFORM
1/2" = 1'-0"

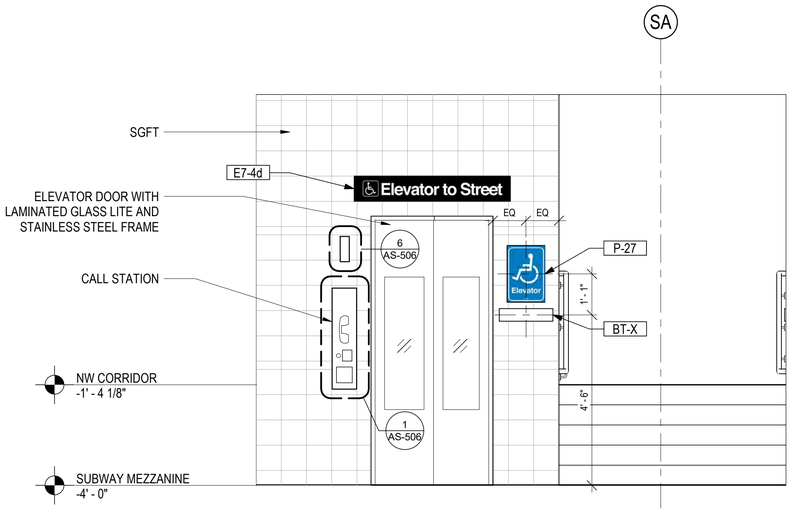

1 ELEVATOR ES1 ENLARGED ELEVATION AT MEZZANINE
1/2" = 1'-0"

DESIGN BY:										
DRAWN BY:										
CHECKED BY:										
APPROVED BY:		4	7/3/2023	ISSUED FOR BID	KP	KP	NL			
CDOT/APPROVED BY:		NO.	DATE	REVISIONS	DES.	DRW.	CHK.	DCCO	CDOT	

TranSystems
TRANSYSTEMS
222 SOUTH RIVERSIDE PLAZA SUITE 610
CHICAGO, ILLINOIS 60606

LICENSED ARCHITECT
QUENTIN PETERSEN
001.024068
STATE OF ILLINOIS

CDOT
CHICAGO DEPARTMENT OF TRANSPORTATION
DIVISION OF ENGINEERING

STATE / LAKE LOOP ELEVATED STATION
200 NORTH STATE STREET, CHICAGO, IL 60601

ELEVATOR ENLARGED ELEVATIONS

CDOT PROJECT D-1-209 | DATE: 9/9/2022

SPEC. NO.

DRAWING NO. AS-403

REVISION NO.4

NOTES:
1. REFER TO AS-432 THROUGH AS-436 FOR SGFT PATTERN INFORMATION
2. REFER TO AGS SHEETS FOR SIGNAGE DETAILS

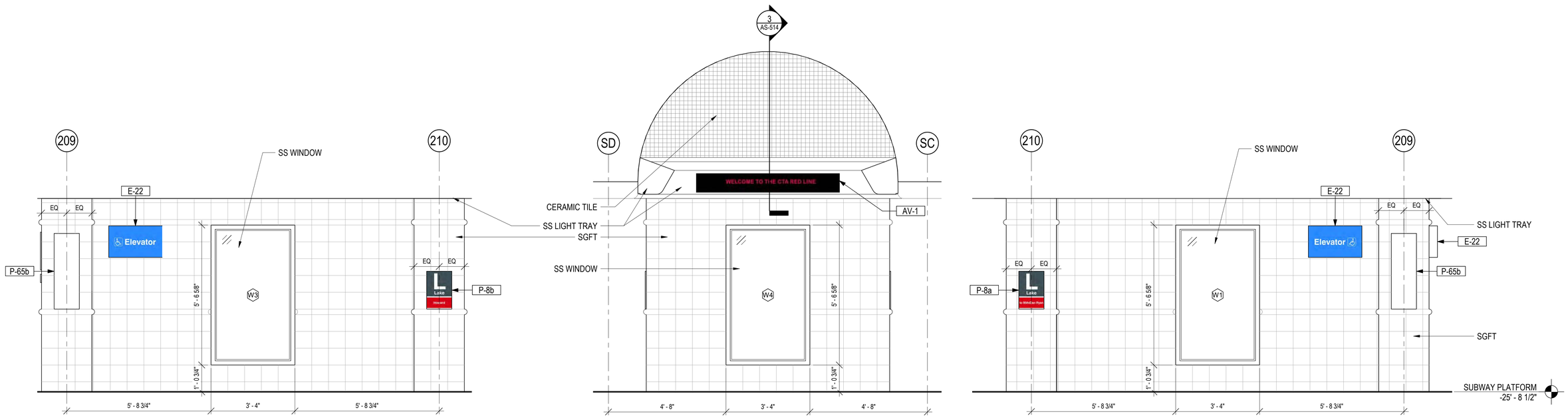

3 TILE ELEVATION
1/2" = 1'-0"

2 TILE ELEVATION
1/2" = 1'-0"

1 TILE ELEVATION
1/2" = 1'-0"

DESIGN BY:									
DRAWN BY:									
CHECKED BY:									
APPROVED BY:		4	7/3/2023	ISSUED FOR BID	KP	KP	NL		
CDOT/APPROVED BY:		NO.	DATE	REVISIONS	DES.	DRW.	CHK.	DCCO	CDOT

TranSystems
TRANSYSTEMS
222 SOUTH RIVERSIDE PLAZA SUITE 610
CHICAGO, ILLINOIS 60606

LICENSED ARCHITECT
QUENTIN PETERSEN
001.024088
STATE OF ILLINOIS

CDOT
CHICAGO DEPARTMENT OF TRANSPORTATION
DIVISION OF ENGINEERING

STATE / LAKE LOOP ELEVATED STATION
200 NORTH STATE STREET, CHICAGO, IL 60601

ELEVATOR ENLARGED ELEVATIONS

CDOT PROJECT D-1-209

DATE: 9/9/2022

SPEC. NO.

DRAWING NO.
AS-404

REVISION NO.4

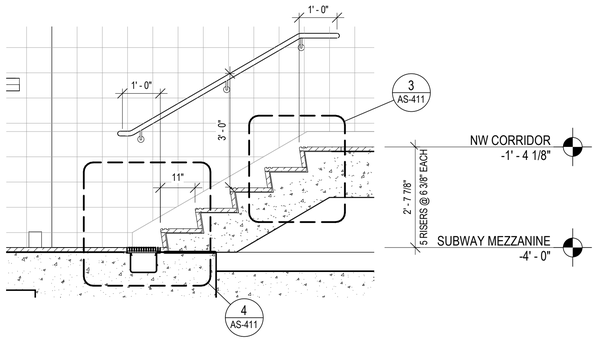

5 STAIR SECTION
1/2" = 1'-0"

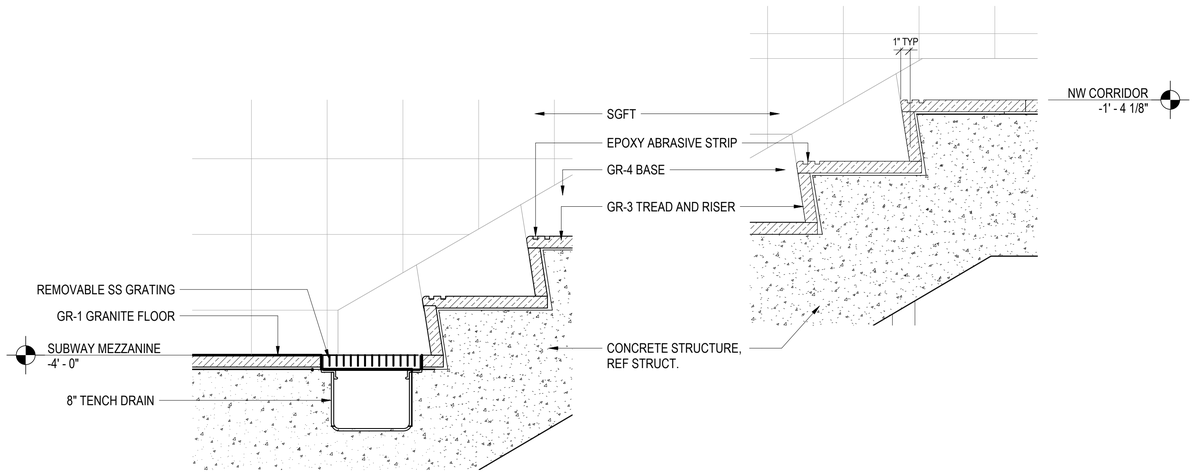

4 STAIR SECTION DETAIL 1
1 1/2" = 1'-0"

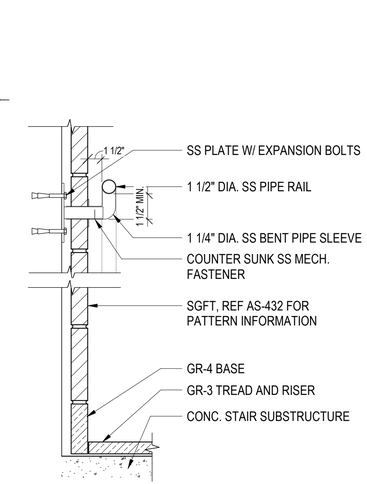

3 STAIR SECTION DETAIL
1 1/2" = 1'-0"

2 SECTION DETAIL AT RAIL
1 1/2" = 1'-0"

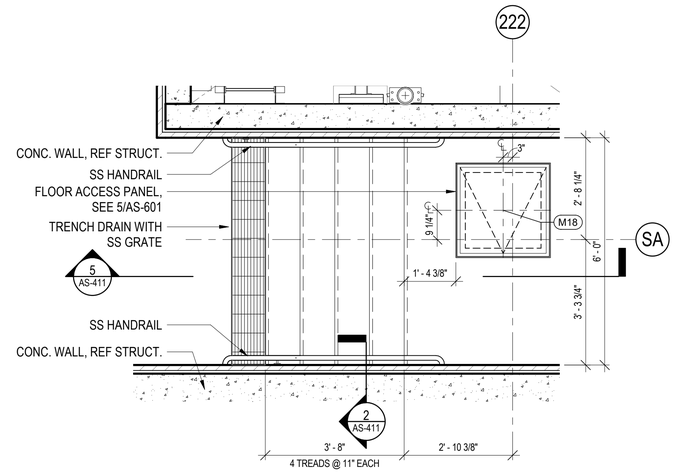

1 STAIR PLAN
1/2" = 1'-0"

DESIGN BY:										
DRAWN BY:										
CHECKED BY:										
APPROVED BY:		4	7/3/2023	ISSUED FOR BID	KP	KP	NL			
CDOT/APPROVED BY:		NO.	DATE	REVISIONS	DES.	DRW.	CHK.	DCCO	CDOT	

TranSystems
TRANSYSTEMS
222 SOUTH RIVERSIDE PLAZA SUITE 610
CHICAGO, ILLINOIS 60606

LICENSED ARCHITECT
QUENTIN PETERSEN
001.024088
STATE OF ILLINOIS

CDOT
CHICAGO DEPARTMENT
OF TRANSPORTATION
DIVISION OF ENGINEERING

STATE / LAKE LOOP ELEVATED STATION
200 NORTH STATE STREET, CHICAGO, IL 60601

SPEC. NO.

ENLARGED STAIR PLANS, SECTIONS & DETAILS

DRAWING NO.
AS-411

CDOT PROJECT D-1-209

DATE: 9/9/2022

REVISION NO.4

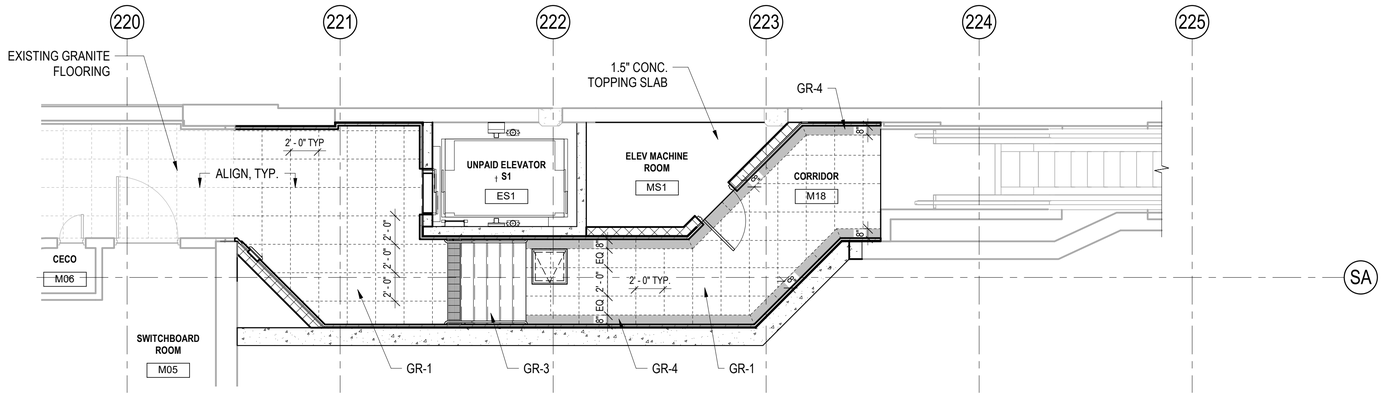

2 MEZZANINE LEVEL FINISH PLAN NORTH

3/16" = 1'-0"

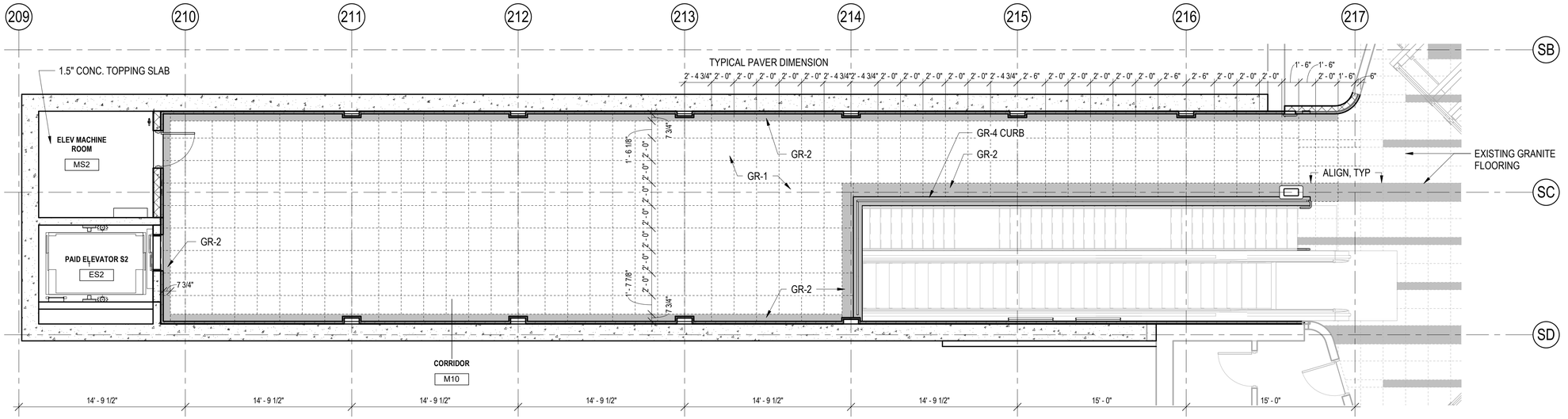

1 MEZZANINE LEVEL FINISH PLAN SOUTH

3/16" = 1'-0"

DESIGN BY:									
DRAWN BY:									
CHECKED BY:									
APPROVED BY:		4	7/3/2023	ISSUED FOR BID	KP	KP	NL		
CDOT/APPROVED BY:		NO.	DATE	REVISIONS	DES.	DRW.	CHK.	DCCO	CDOT

TRANSYSTEMS
222 SOUTH RIVERSIDE PLAZA SUITE 610
CHICAGO, ILLINOIS 60606

LICENSED ARCHITECT
QUENTIN PETERSEN
001.024066
STATE OF ILLINOIS

CDOT
CHICAGO DEPARTMENT OF TRANSPORTATION
DIVISION OF ENGINEERING

STATE / LAKE LOOP ELEVATED STATION
200 NORTH STATE STREET, CHICAGO, IL 60601

SUBWAY MEZZANINE FINISH PLANS

CDOT PROJECT D-1-209

DATE: 9/9/2022

SPEC. NO.

DRAWING NO. AS-431

REVISION NO.4

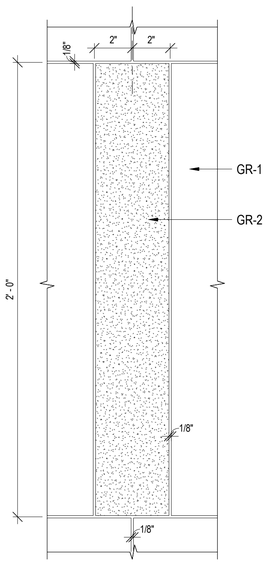

2 FLOOR PAVER DETAIL
3" = 1'-0"

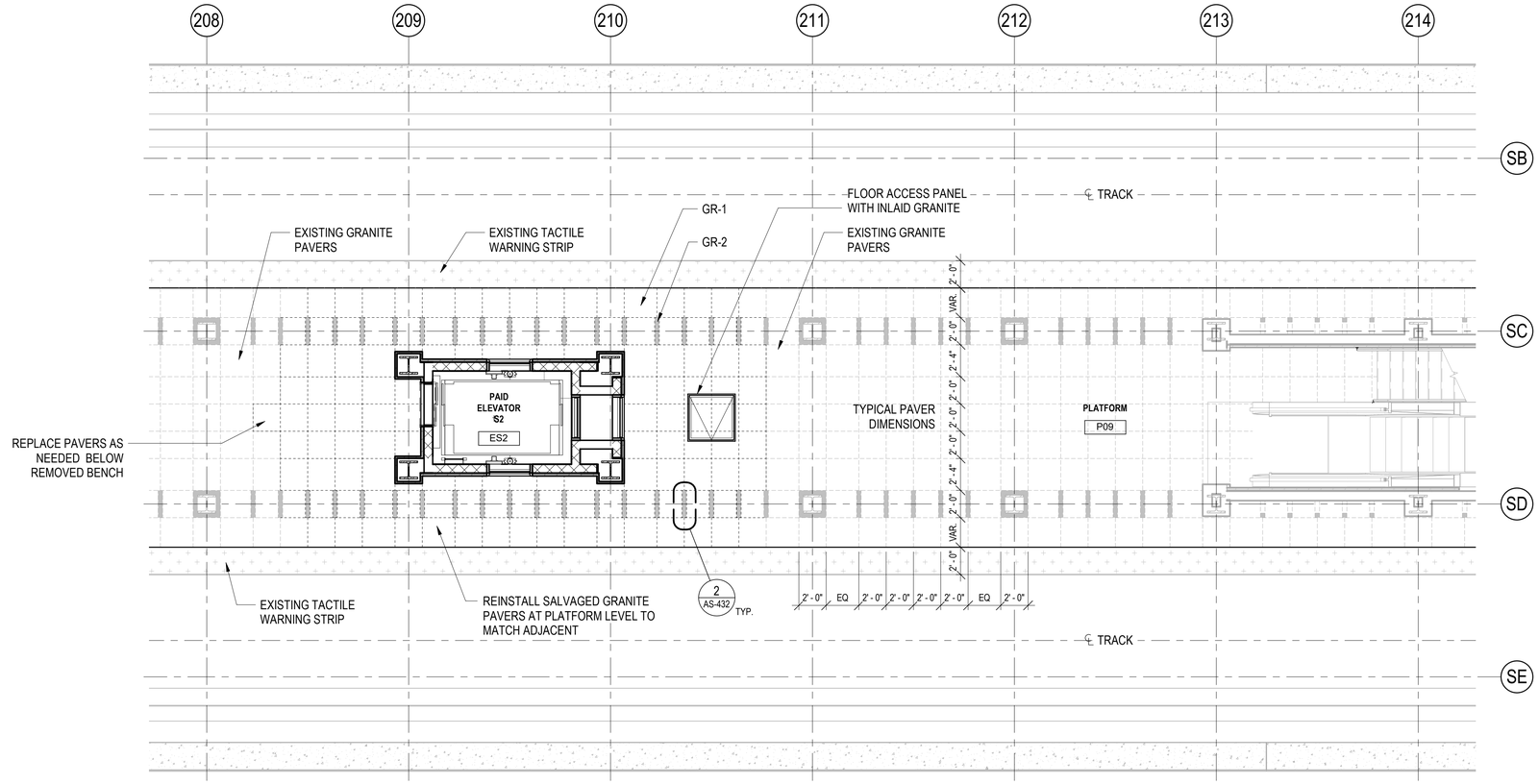

1 PLATFORM LEVEL FINISH PLAN
3/16" = 1'-0"

DESIGN BY:										
DRAWN BY:										
CHECKED BY:										
APPROVED BY:		4	7/3/2023	ISSUED FOR BID	KP	KP	NL			
CDOT/APPROVED BY:		NO.	DATE	REVISIONS	DES.	DRW.	CHK.	DCCO	CDOT	

TranSystems
TRANSYSTEMS
222 SOUTH RIVERSIDE PLAZA SUITE 610
CHICAGO, ILLINOIS 60606

LICENSED ARCHITECT
QUENTIN PETERSEN
001.024068
STATE OF ILLINOIS

CDOT
CHICAGO DEPARTMENT OF TRANSPORTATION
DIVISION OF ENGINEERING

STATE / LAKE LOOP ELEVATED STATION
200 NORTH STATE STREET, CHICAGO, IL 60601

SUBWAY PLATFORM FINISH PLAN

CDOT PROJECT D-1-209

DATE: 9/9/2022

SPEC. NO.

DRAWING NO.
AS-432

REVISION NO.4

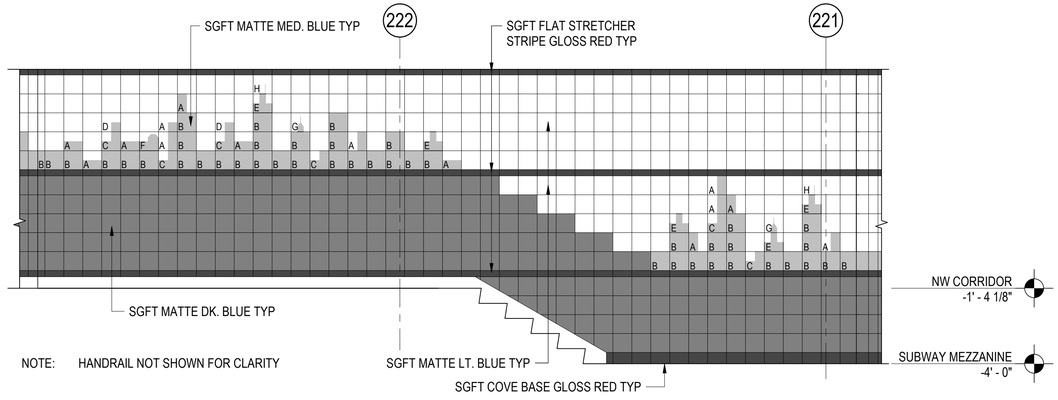

11 TILE ELEVATION
3/8" = 1'-0"

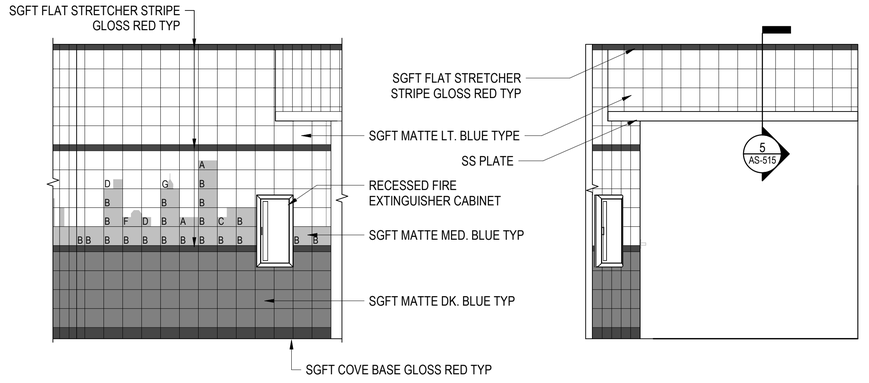

10 TILE ELEVATION
3/8" = 1'-0"

9 TILE ELEVATION
3/8" = 1'-0"

NOTES:
1. FOR TILE SIZE, TYPES, AND COLORS, REFER TO AS-434
2. ALL SGFT EXTERIOR CORNERS UNITS TO BE ROUNDED TO MATCH EXISTING

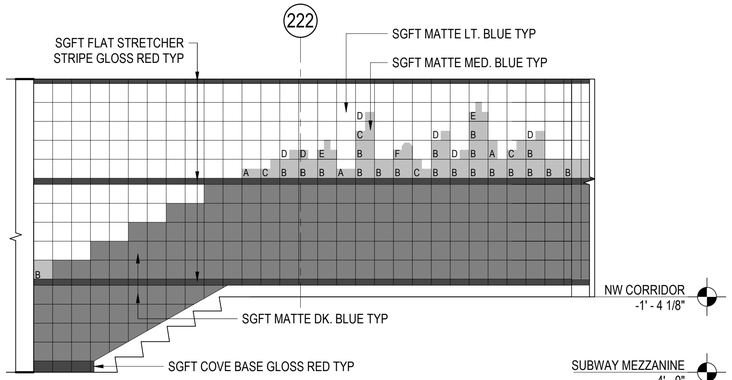

8 TILE ELEVATION
3/8" = 1'-0"

NOTE: HANDRAIL NOT SHOWN FOR CLARITY

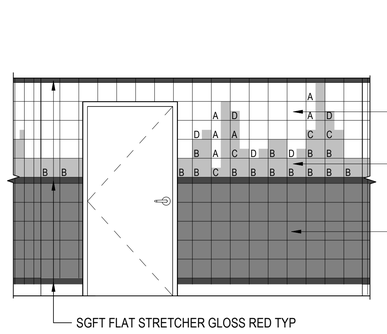

7 TILE ELEVATION
3/8" = 1'-0"

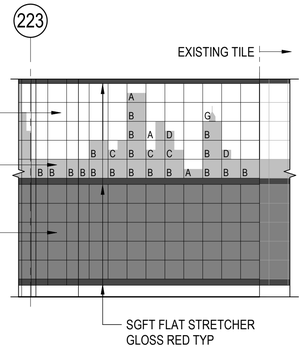

6 TILE ELEVATION
3/8" = 1'-0"

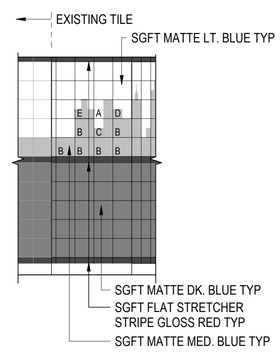

5 TILE ELEVATION
3/8" = 1'-0"

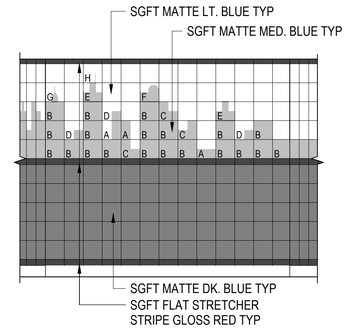

4 TILE ELEVATION
3/8" = 1'-0"

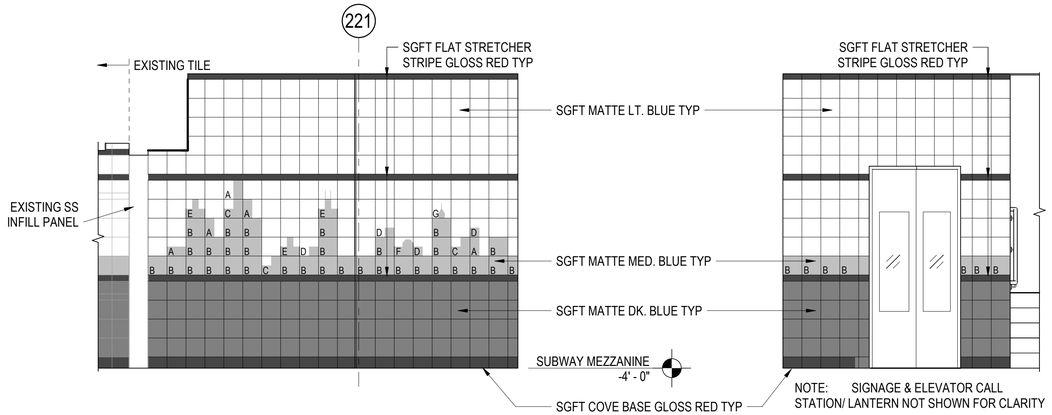

3 TILE ELEVATION
3/8" = 1'-0"

2 TILE ELEVATION
3/8" = 1'-0"

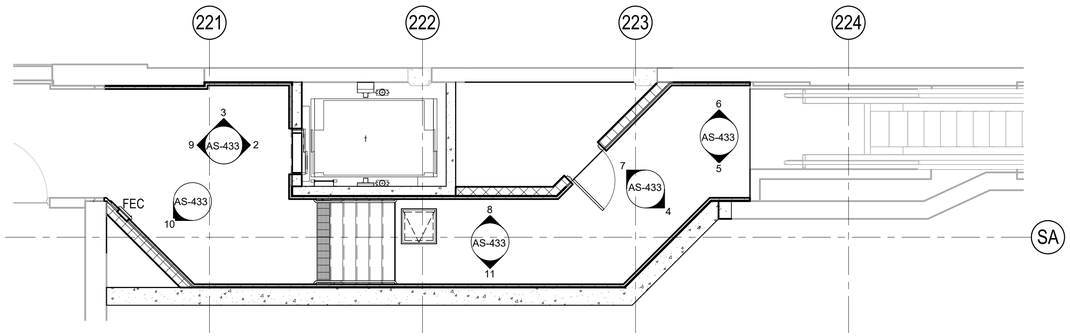

1 MEZZANINE TILE ELEVATION KEYPLAN
3/16" = 1'-0"

DESIGN BY:										
DRAWN BY:										
CHECKED BY:										
APPROVED BY:		4	7/3/2023	ISSUED FOR BID	KP	KP	NL			
CDOT/APPROVED BY:		NO.	DATE	REVISIONS	DES.	DRW.	CHK.	DCCO	CDOT	

TranSystems
TRANSYSTEMS
222 SOUTH RIVERSIDE PLAZA SUITE 610
CHICAGO, ILLINOIS 60606

LICENSED ARCHITECT
QUENTIN PETERSEN
001.024088
STATE OF ILLINOIS

CDOT
CHICAGO DEPARTMENT OF TRANSPORTATION
DIVISION OF ENGINEERING

STATE / LAKE LOOP ELEVATED STATION
200 NORTH STATE STREET, CHICAGO, IL 60601

ENLARGED TILE PATTERN ELEVATIONS

CDOT PROJECT D-1-209

DATE: 9/9/2022

SPEC. NO.

DRAWING NO.
AS-433

REVISION NO.4

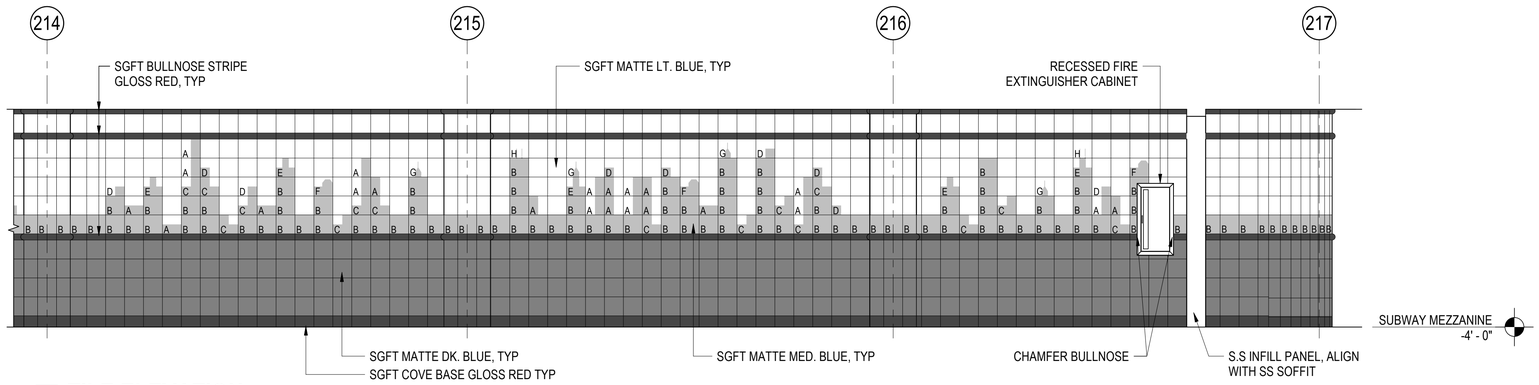

5 TILE ELEVATION
3/8" = 1'-0"

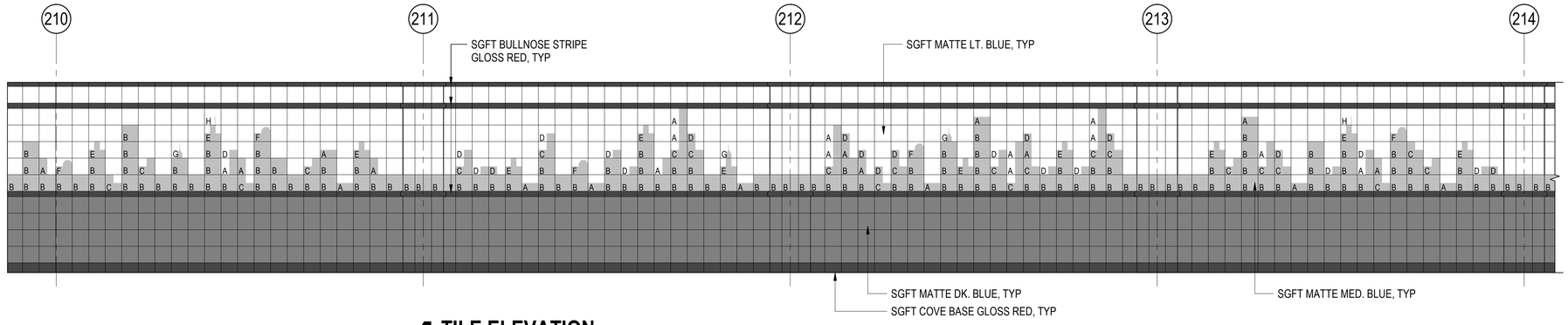

4 TILE ELEVATION
3/8" = 1'-0"

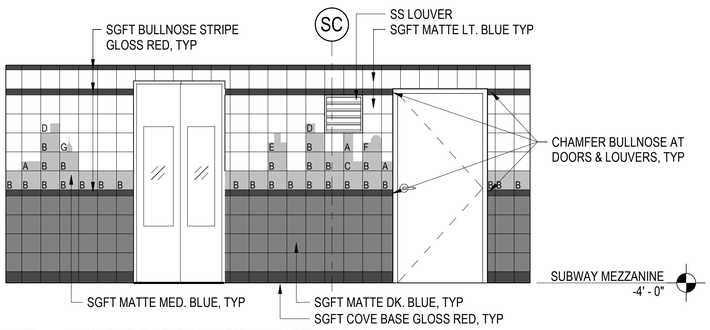

NOTE: SIGNAGE & ELEVATOR CALL STATION/ LANTERN NOT SHOWN FOR CLARITY

2 TILE ELEVATION
3/8" = 1'-0"

NOTES:
1. ALL SGFT EXTERIOR CORNERS UNITS TO BE ROUNDED TO MATCH EXISTING

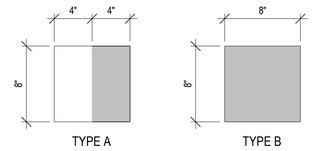

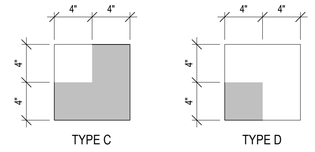

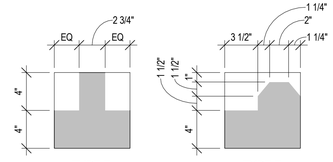

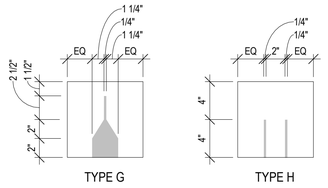

NOTE: TILE SIZES AS SHOWN ARE NOMINAL

3 TYPICAL WALL TILE
1 1/2" = 1'-0"

"LOOP" SIGNAGE DETAIL

3" BLACK LETTERS ON 8" BLOCK, INTEGRAL WITH WALL FINISH

TILE COLOR LEGEND

- COLOR 1 - GLOSS RED
- COLOR 2 - MATTE LT. BLUE
- COLOR 3 - MATTE MED. BLUE
- COLOR 4 - MATTE DK. BLUE

NOTE: TILE COLORS TO MATCH EXISTING

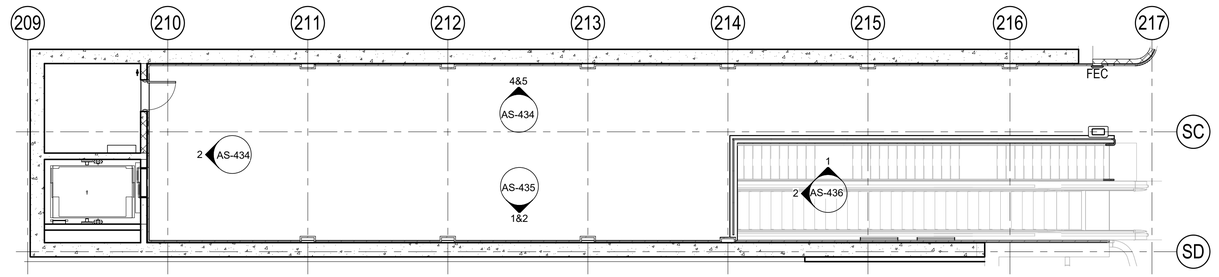

1 MEZZANINE TILE ELEVATION KEYPLAN
1/8" = 1'-0"

DESIGN BY:										TranSystems TRANSYSTEMS 222 SOUTH RIVERSIDE PLAZA SUITE 610 CHICAGO, ILLINOIS 60606
DRAWN BY:										
CHECKED BY:										
APPROVED BY:		4	7/3/2023	ISSUED FOR BID	KP	KP	NL			
CDOT/APPROVED BY:		NO.	DATE	REVISIONS	DES.	DRW.	CHK.	DCCO	CDOT	

LICENSED ARCHITECT
QUENTIN PETERSEN
001.024068
STATE OF ILLINOIS

CDOT
CHICAGO DEPARTMENT OF TRANSPORTATION
DIVISION OF ENGINEERING

STATE / LAKE LOOP ELEVATED STATION
200 NORTH STATE STREET, CHICAGO, IL 60601

ENLARGED TILE PATTERN ELEVATIONS

CDOT PROJECT D-1-209 | DATE: 9/9/2022

SPEC. NO.

DRAWING NO. AS-434

REVISION NO.4

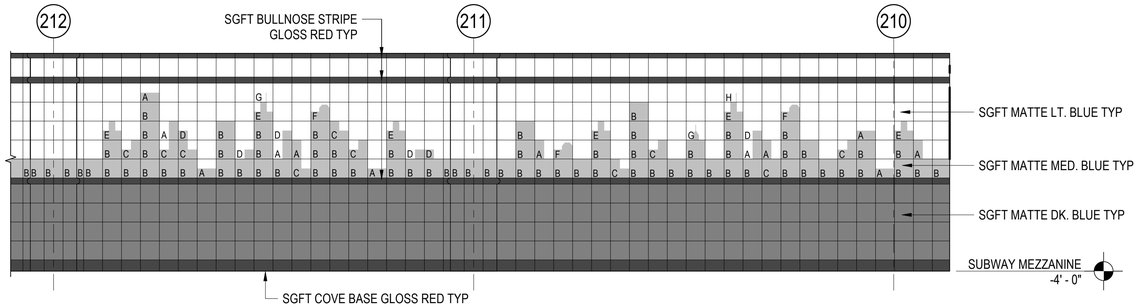

2 TILE ELEVATION
3/8" = 1'-0"

NOTES:
1. FOR TILE SIZE, TYPES, AND COLORS, REFER TO AS-434
2. ALL SGFT EXTERIOR CORNERS UNITS TO BE ROUNDED TO MATCH EXISTING

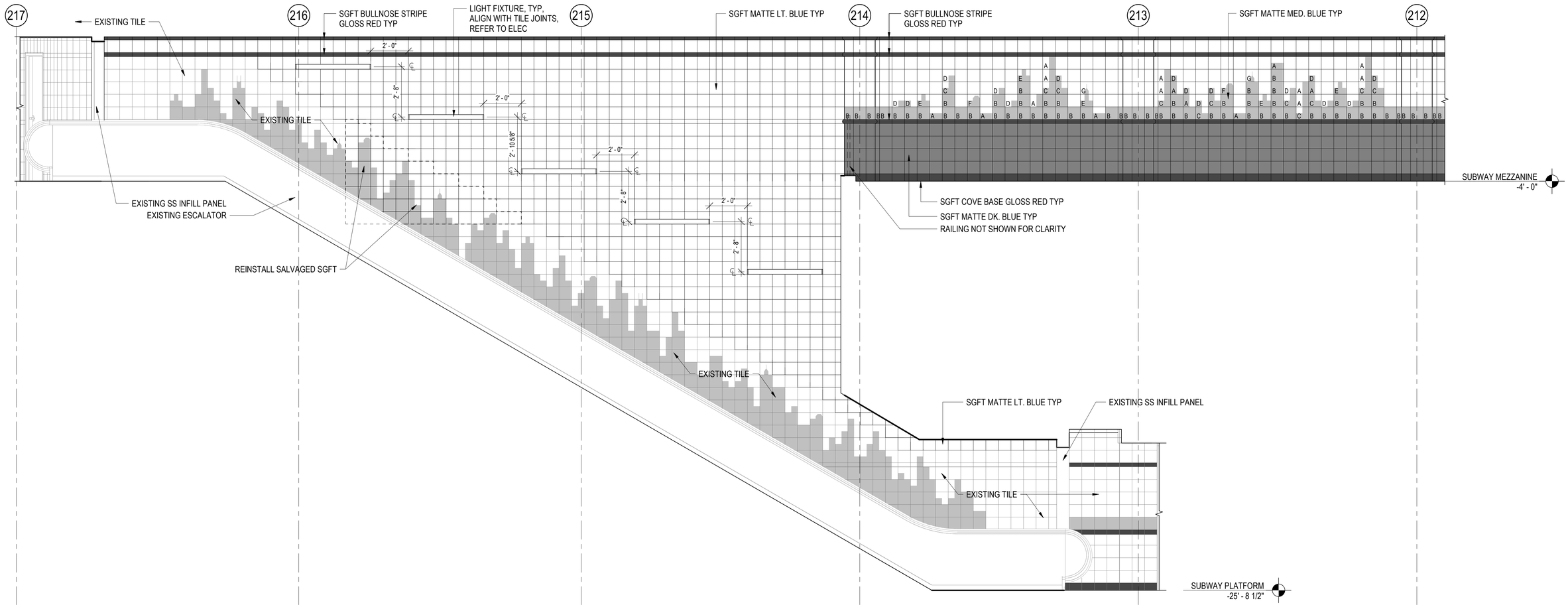

1 TILE ELEVATION
3/8" = 1'-0"

DESIGN BY:										
DRAWN BY:										
CHECKED BY:										
APPROVED BY:		4	7/3/2023	ISSUED FOR BID	KP	KP	NL			
CDOT/APPROVED BY:		NO.	DATE	REVISIONS	DES.	DRW.	CHK.	DCCO	CDOT	

TranSystems
TRANSYSTEMS
222 SOUTH RIVERSIDE PLAZA SUITE 610
CHICAGO, ILLINOIS 60606

LICENSED ARCHITECT
QUENTIN PETERSEN
001.024068
STATE OF ILLINOIS

CDOT
CHICAGO DEPARTMENT
OF TRANSPORTATION
DIVISION OF ENGINEERING

STATE / LAKE LOOP ELEVATED STATION
200 NORTH STATE STREET, CHICAGO, IL 60601

ENLARGED TILE PATTERN ELEVATIONS

CDOT PROJECT D-1-209

DATE: 9/9/2022

SPEC. NO.

DRAWING NO.
AS-435

REVISION NO.4

NOTES:
1. FOR TILE SIZE, TYPES, AND COLORS, REFER TO AS-434
2. ALL SGFT EXTERIOR CORNERS UNITS TO BE ROUNDED TO MATCH EXISTING

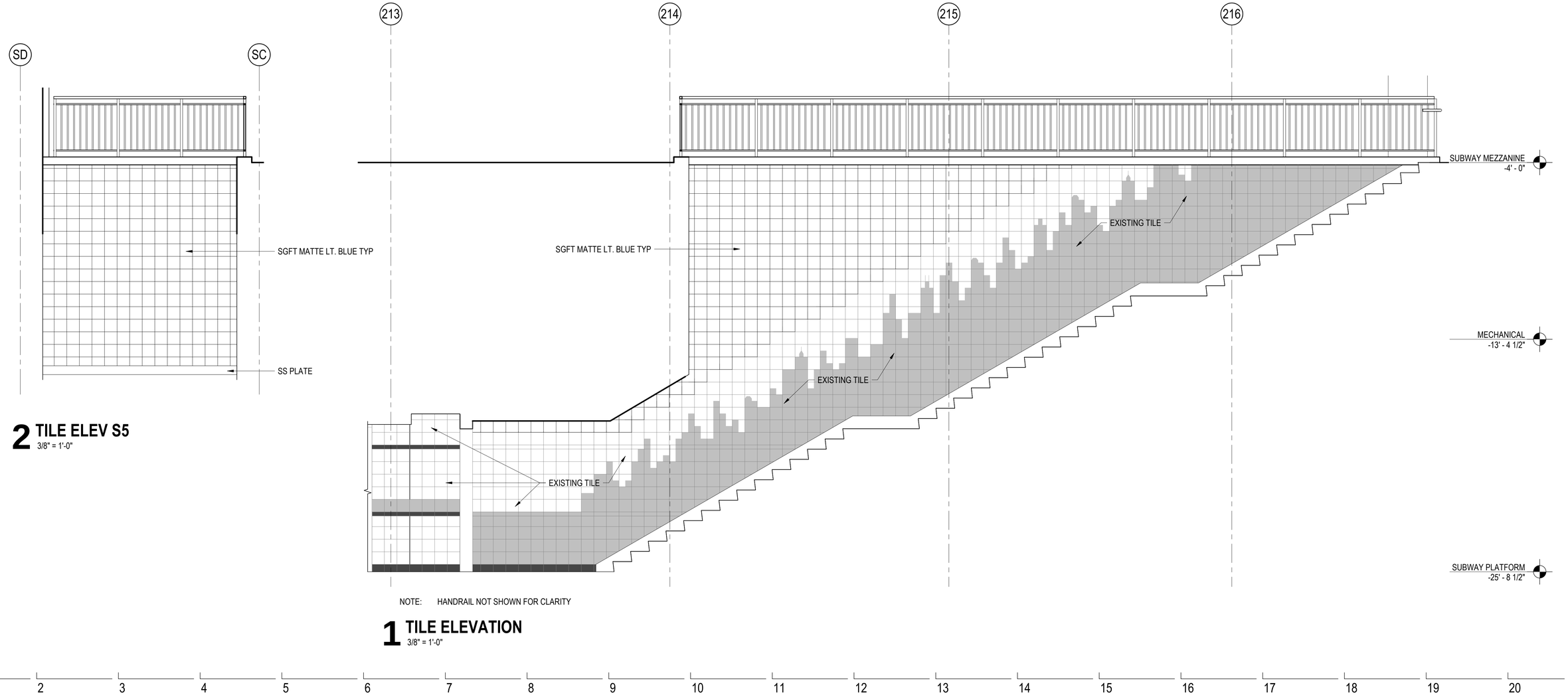

2 TILE ELEV S5
3/8" = 1'-0"

NOTE: HANDRAIL NOT SHOWN FOR CLARITY

1 TILE ELEVATION
3/8" = 1'-0"

DESIGN BY:										
DRAWN BY:										
CHECKED BY:										
APPROVED BY:		4	7/3/2023	ISSUED FOR BID	KP	KP	NL			
CDOT/APPROVED BY:		NO.	DATE	REVISIONS	DES.	DRW.	CHK.	DCCO	CDOT	

TRANSYSTEMS
222 SOUTH RIVERSIDE PLAZA SUITE 610
CHICAGO, ILLINOIS 60606

LICENSED ARCHITECT
QUENTIN PETERSEN
001.024068
STATE OF ILLINOIS

CHICAGO DEPARTMENT OF TRANSPORTATION
DIVISION OF ENGINEERING

STATE / LAKE LOOP ELEVATED STATION
200 NORTH STATE STREET, CHICAGO, IL 60601

ENLARGED TILE PATTERN ELEVATIONS

CDOT PROJECT D-1-209

DATE: 9/9/2022

SPEC. NO.

DRAWING NO. AS-436

REVISION NO. 4

NOTES:
1. FOR TILE SIZE, TYPES, AND COLORS, REFER TO AS-434
2. ALL SGFT EXTERIOR CORNERS UNITS TO BE ROUNDED TO MATCH EXISTING

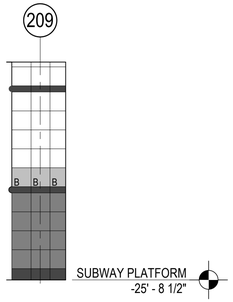

5 TILE ELEVATION
3/8" = 1'-0"

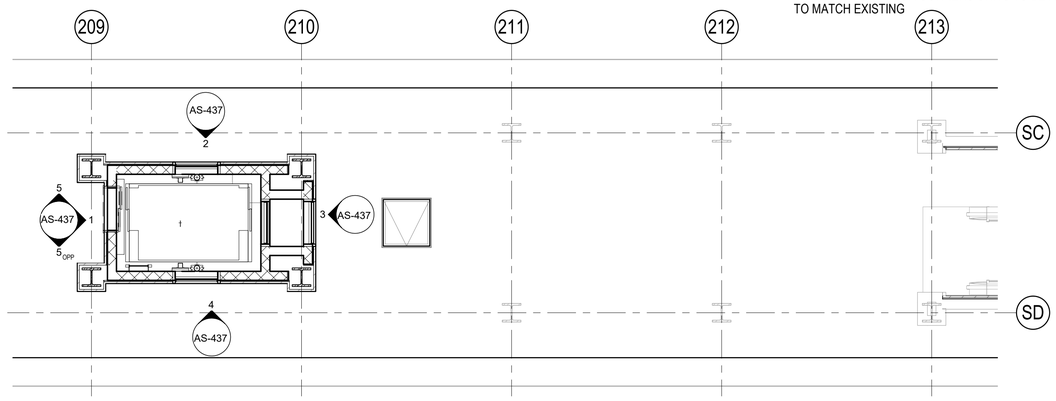

6 PLATFORM TILE ELEVATION KEYPLAN
3/16" = 1'-0"

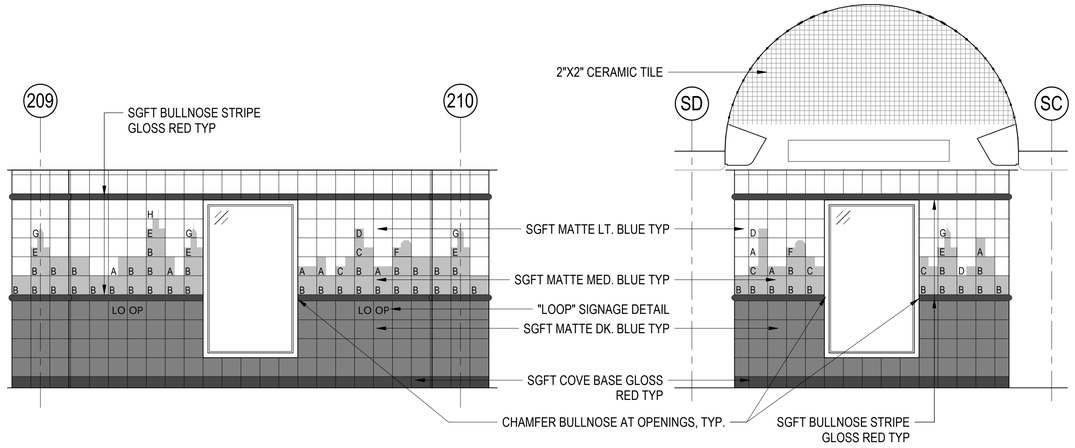

4 TILE ELEVATION
3/8" = 1'-0"

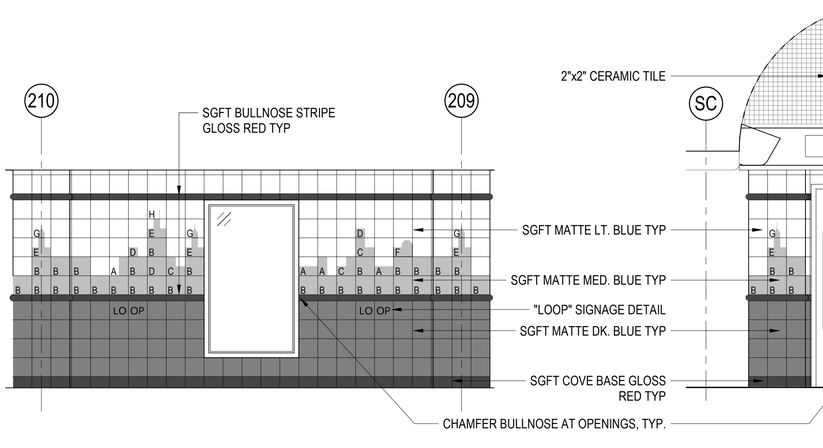

3 TILE ELEVATION
3/8" = 1'-0"

2 TILE ELEVATION
3/8" = 1'-0"

NOTE: SIGNAGE & ELEVATOR CALL STATION/ LANTERN NOT SHOWN FOR CLARITY

1 TILE ELEVATION
3/8" = 1'-0"

DESIGN BY:										
DRAWN BY:										
CHECKED BY:										
APPROVED BY:		4	7/3/2023	ISSUED FOR BID	KP	KP	NL			
CDOT/APPROVED BY:		NO.	DATE	REVISIONS	DES.	DRW.	CHK.	DCCO	CDOT	

TranSystems
TRANSYSTEMS
222 SOUTH RIVERSIDE PLAZA SUITE 610
CHICAGO, ILLINOIS 60606

LICENSED ARCHITECT
QUENTIN PETERSEN
001.024068
STATE OF ILLINOIS

CDOT
CHICAGO DEPARTMENT
OF TRANSPORTATION
DIVISION OF ENGINEERING

STATE / LAKE LOOP ELEVATED STATION
200 NORTH STATE STREET, CHICAGO, IL 60601

ENLARGED TILE PATTERN ELEVATIONS

CDOT PROJECT D-1-209

DATE: 9/9/2022

SPEC. NO.

DRAWING NO.
AS-437

REVISION NO.4

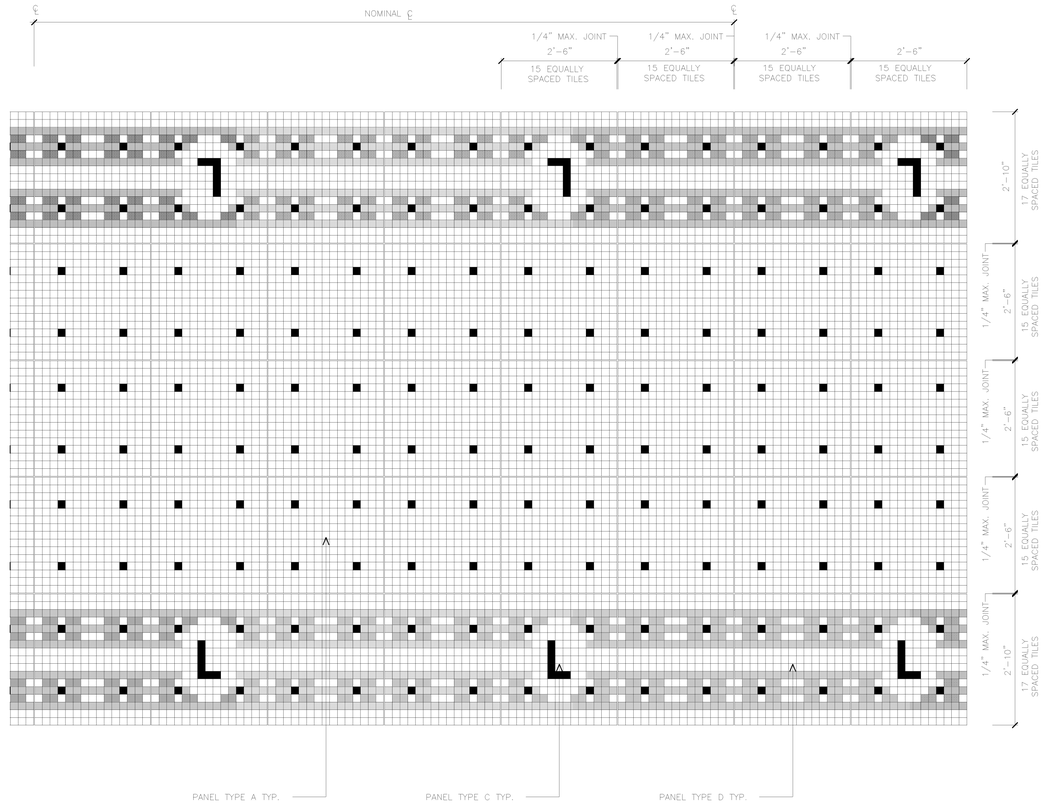

1 TYP. CERAMIC TILE CEILING PATTERN

LEGEND

- WHITE 2"X2" CERAMIC TILE DAL-TILE 6401 (2) GLOSS WHITE OR EQUAL
- RED GLAZED 2"X2" CERAMIC TILE DAL-TILE DK917 OR EQUAL
- BUTTERSCOTCH GLAZED 2"X2" CERAMIC TILE DAL-TILE DK934 3 (CLEAR GLAZED) OR EQUAL
- TEAL GLAZED 2"X2" CERAMIC TILE DAL TILE DK9391 BAHAMA (CLEAR GLAZED) OR EQUAL

NOTE: GROUT TO BE HYDROMENT MISTY GREY 661/361 OR EQUAL

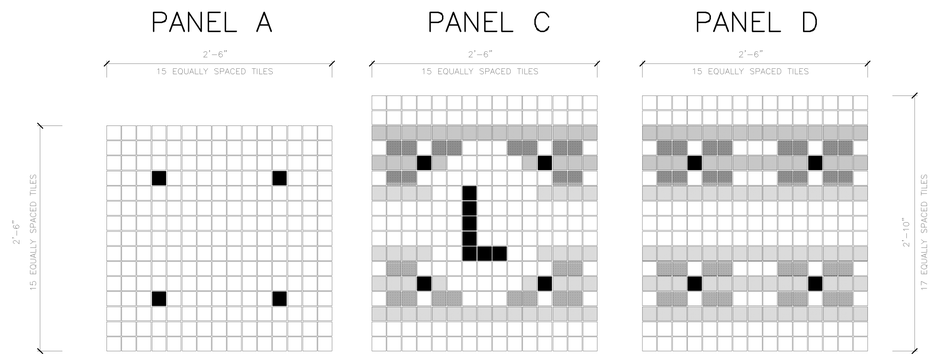

2 TYP. PANEL TYPES

DESIGN BY:										
DRAWN BY:										
CHECKED BY:										
APPROVED BY:		4	7/3/2023	ISSUED FOR BID	KP	KP	NL			
CDOT/APPROVED BY:		NO.	DATE	REVISIONS	DES.	DRW.	CHK.	DCCO	CDOT	

TRANSYSTEMS
222 SOUTH RIVERSIDE PLAZA SUITE 610
CHICAGO, ILLINOIS 60606

LICENSED ARCHITECT
QUENTIN PETERSEN
001.024068
STATE OF ILLINOIS

CDOT
CHICAGO DEPARTMENT OF TRANSPORTATION
DIVISION OF ENGINEERING

STATE / LAKE LOOP ELEVATED STATION
200 NORTH STATE STREET, CHICAGO, IL 60601

EXISTING PLATFORM CEILING TILE DETAILS

SPEC. NO.

DRAWING NO. AS-441

CDOT PROJECT D-1-209 | DATE: 9/9/2022 | REVISION NO.4

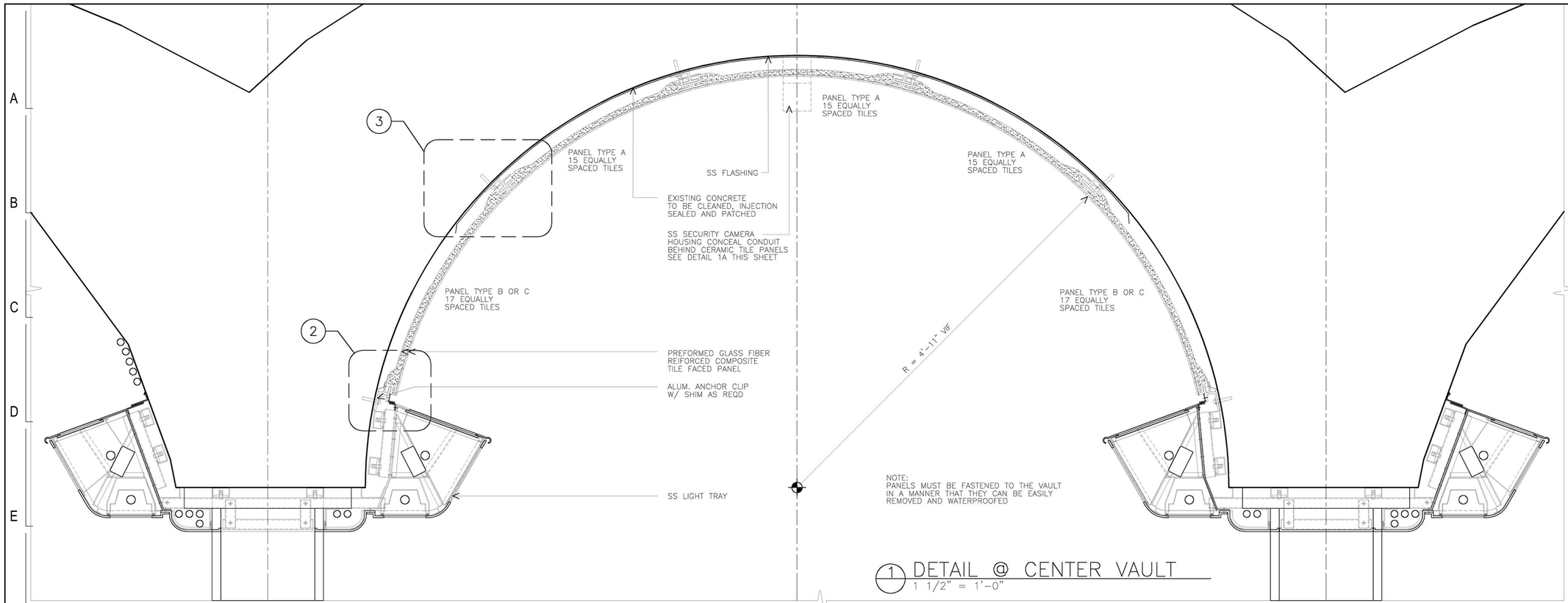

1 DETAIL @ CENTER VAULT
1 1/2" = 1'-0"

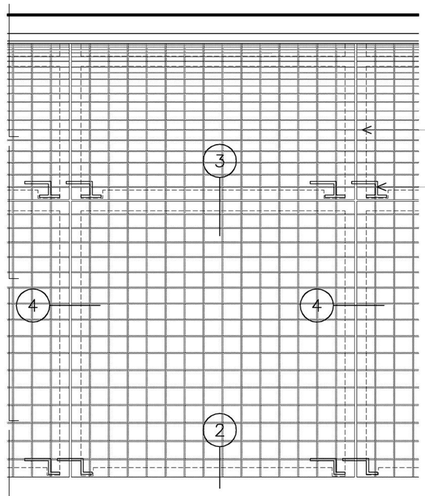

5 CERAMIC TILE ELEVATION
1 1/2" = 1'-0"

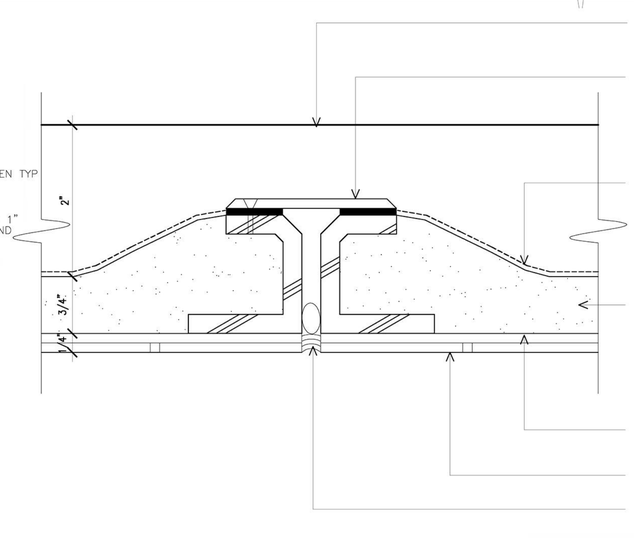

4 CERAMIC TILE DETAIL
FULL SCALE

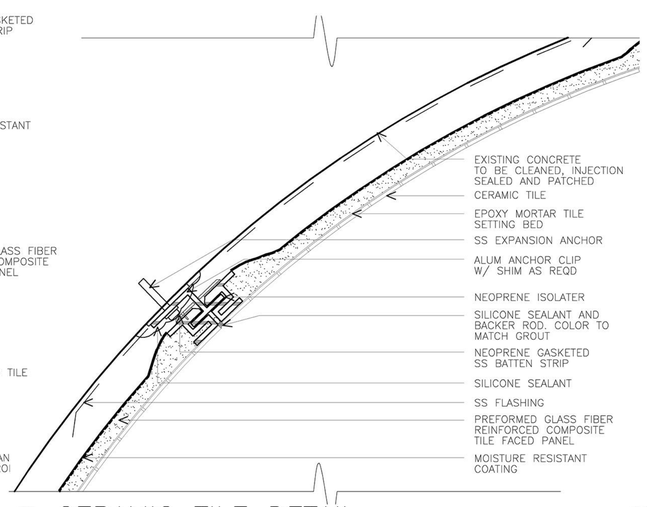

3 CERAMIC TILE DETAIL
3" = 1'-0"

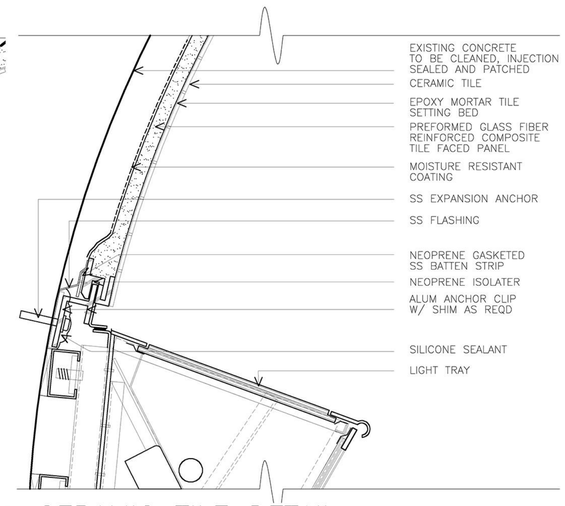

2 CERAMIC TILE DETAIL
3" = 1'-0"

NO.	DATE	REVISIONS	DES.	DRW.	CHK.	DCCO	CDOT
4	7/3/2023	ISSUED FOR BID	KP	KP	NL		

DESIGN BY:
DRAWN BY:
CHECKED BY:
APPROVED BY:
CDOT/APPROVED BY:

TranSystems
TRANSYSTEMS
222 SOUTH RIVERSIDE PLAZA SUITE 610
CHICAGO, ILLINOIS 60606

LICENSED ARCHITECT
QUENTIN PETERSEN
001.024068
STATE OF ILLINOIS

CDOT
CHICAGO DEPARTMENT
OF TRANSPORTATION
DIVISION OF ENGINEERING

STATE / LAKE LOOP ELEVATED STATION
200 NORTH STATE STREET, CHICAGO, IL 60601

EXISTING PLATFORM CEILING TILE DETAILS

CDOT PROJECT D-1-209

DATE: 9/9/2022

SPEC. NO.

DRAWING NO.
AS-442

REVISION NO.4

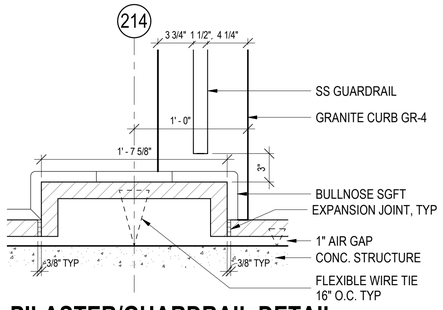

8 PILASTER/GUARDRAIL DETAIL
1 1/2" = 1'-0"

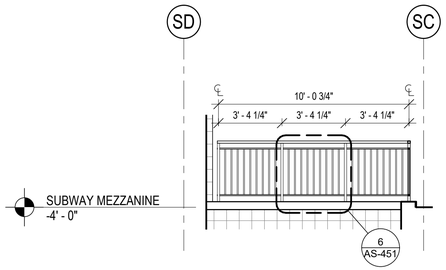

4 RAILING ELEVATION
1/4" = 1'-0"

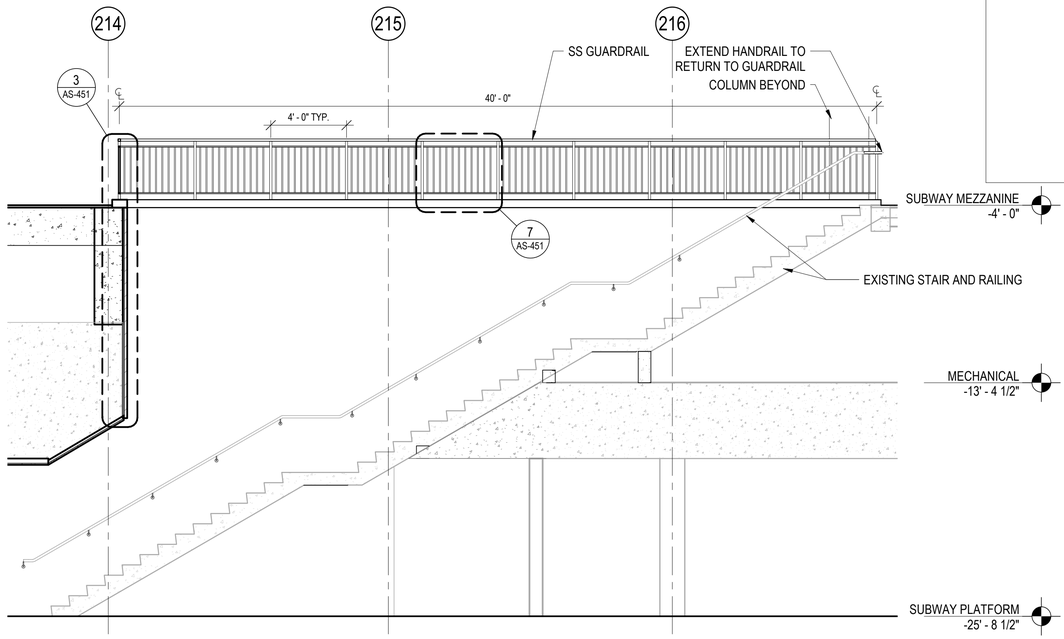

2 STAIR/ESCALATOR OPENING SECTION
1/4" = 1'-0"

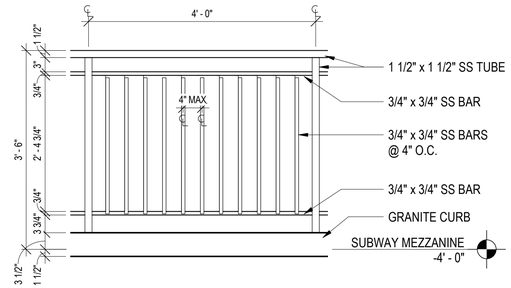

7 GUARDRAIL DETAIL
3/4" = 1'-0"

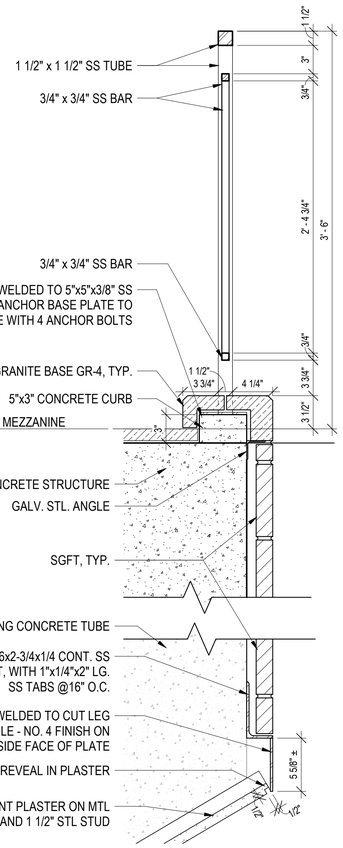

3 GUARDRAIL DETAIL
1 1/2" = 1'-0"

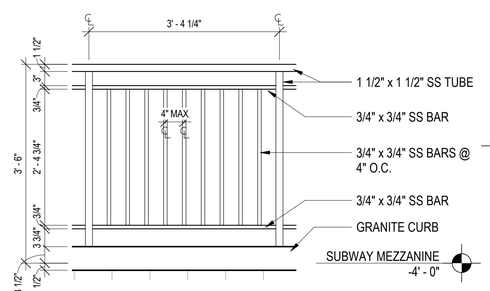

6 GUARDRAIL DETAIL
3/4" = 1'-0"

DETAIL 5 NOT USED

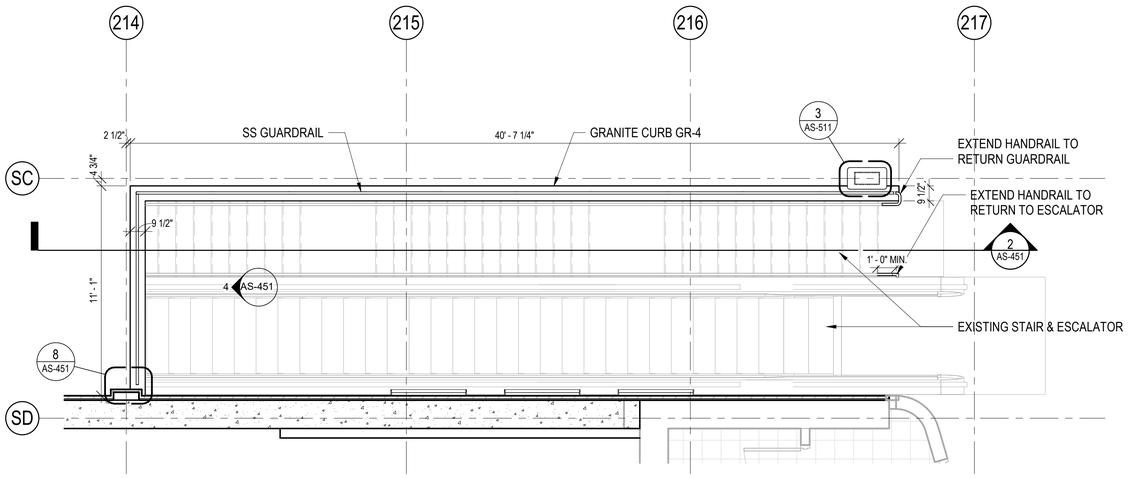

1 RAILING PLAN
1/4" = 1'-0"

DESIGN BY:									
DRAWN BY:									
CHECKED BY:									
APPROVED BY:		4	7/3/2023	ISSUED FOR BID	KP	KP	NL		
CDOT/APPROVED BY:		NO.	DATE	REVISIONS	DES.	DRW.	CHK.	DCCO	CDOT

TranSystems
TRANSYSTEMS
222 SOUTH RIVERSIDE PLAZA SUITE 610
CHICAGO, ILLINOIS 60606

LICENSED ARCHITECT
QUENTIN PETERSEN
001.024066
STATE OF ILLINOIS

CDOT
CHICAGO DEPARTMENT
OF TRANSPORTATION
DIVISION OF ENGINEERING

STATE / LAKE LOOP ELEVATED STATION
200 NORTH STATE STREET, CHICAGO, IL 60601

RAILING PLAN, ELEVATIONS & DETAILS

CDOT PROJECT D-1-209

DATE: 9/9/2022

SPEC. NO.

DRAWING NO.
AS-451

REVISION NO.4

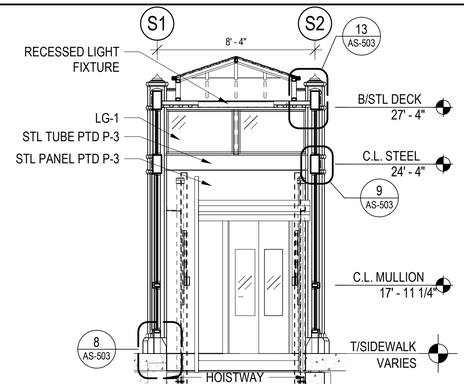

9 SECTION
1/4" = 1'-0"

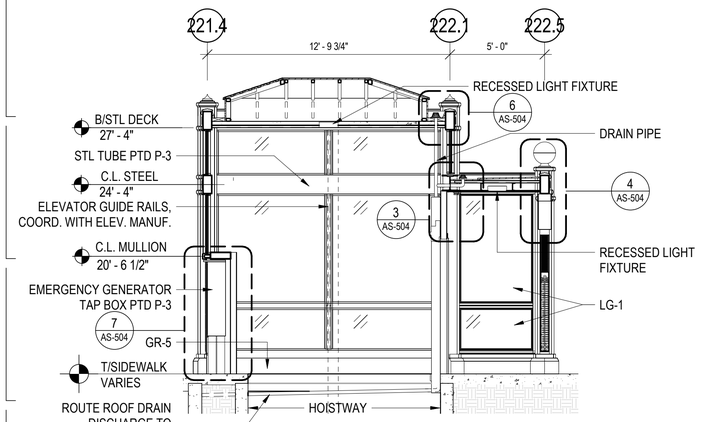

8 SECTION
1/4" = 1'-0"

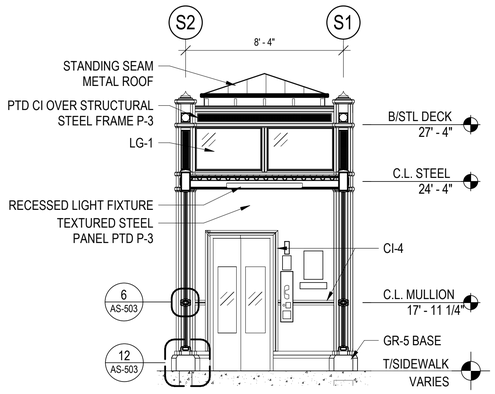

7 SECTION
1/4" = 1'-0"

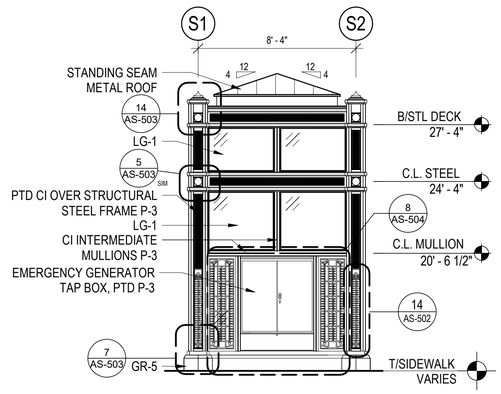

6 BACK ELEVATION
1/4" = 1'-0"

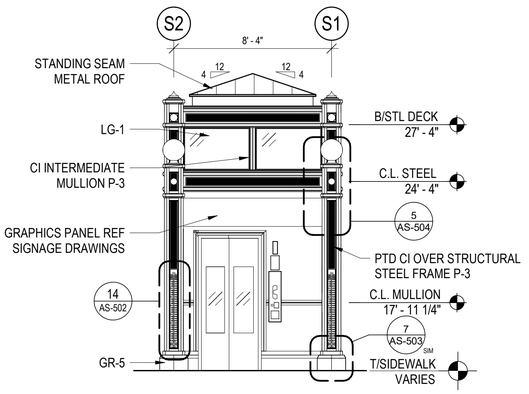

5 FRONT ELEVATION
1/4" = 1'-0"

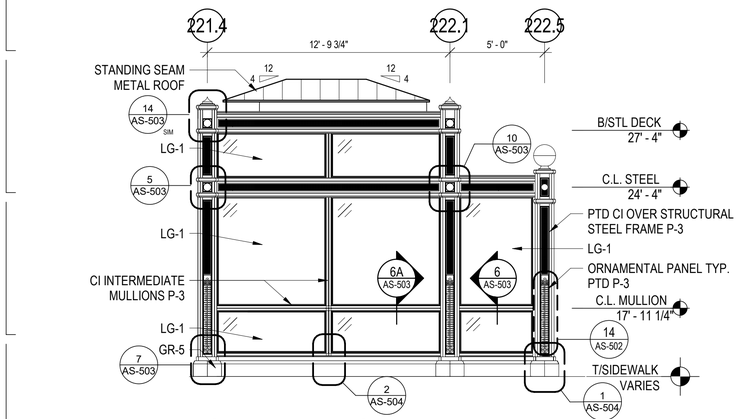

4 SIDE ELEVATION
1/4" = 1'-0"

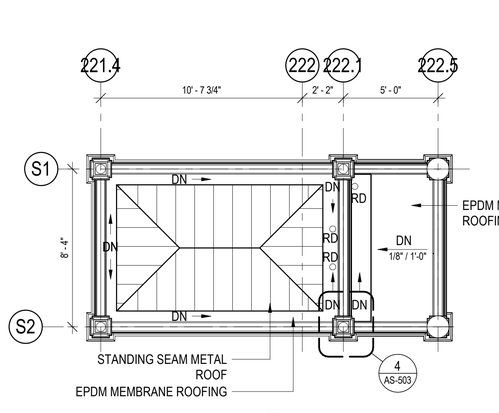

3 ROOF PLAN
1/4" = 1'-0"

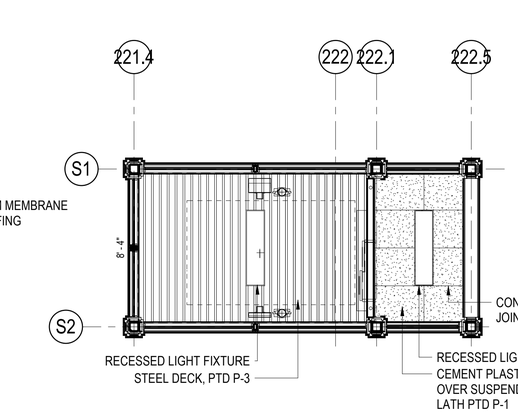

2 REFLECTED CEILING PLAN
1/4" = 1'-0"

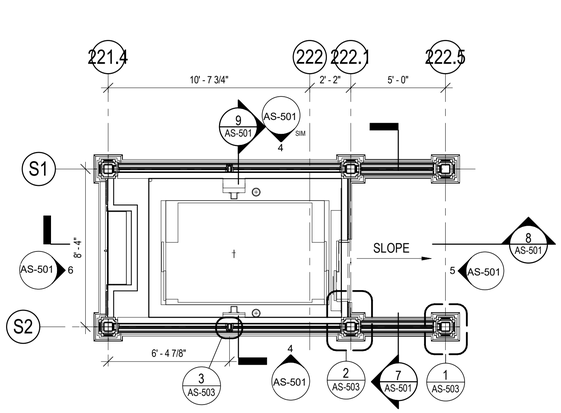

1 PLAN
1/4" = 1'-0"

DESIGN BY:										
DRAWN BY:										
CHECKED BY:										
APPROVED BY:		4	7/3/2023	ISSUED FOR BID	KP	KP	NL			
CDOT/APPROVED BY:		NO.	DATE	REVISIONS	DES.	DRW.	CHK.	DCCO	CDOT	

TRANSYSTEMS
222 SOUTH RIVERSIDE PLAZA SUITE 610
CHICAGO, ILLINOIS 60606

LICENSED ARCHITECT
QUENTIN PETERSEN
001.024068
STATE OF ILLINOIS

CHICAGO DEPARTMENT
OF TRANSPORTATION
DIVISION OF ENGINEERING

STATE / LAKE LOOP ELEVATED STATION
200 NORTH STATE STREET, CHICAGO, IL 60601

ELEVATOR ENCLOSURE PLANS, ELEVATIONS, AND SECTIONS

CDOT PROJECT D-1-209

DATE: 9/9/2022

SPEC. NO.

DRAWING NO.
AS-501

REVISION NO.4

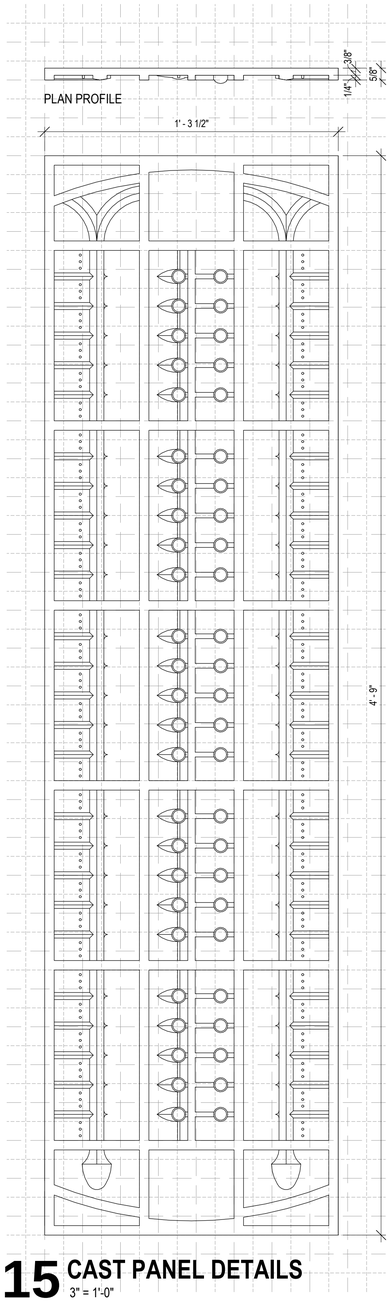

15 CAST PANEL DETAILS
3" = 1'-0"

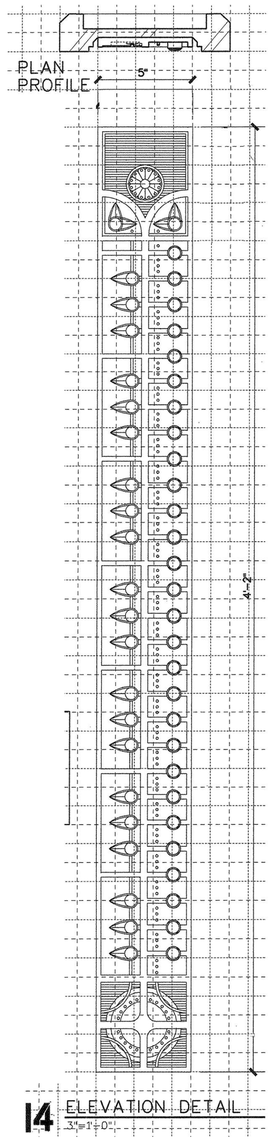

14 ELEVATION DETAIL
3"=1'-0"

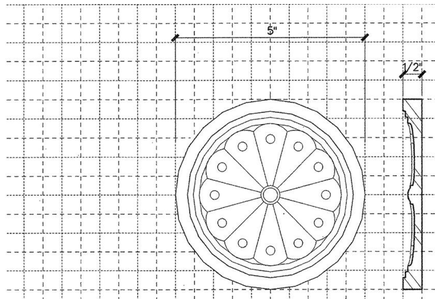

12 CAST IRON ROSETTE
HALF FULL SCALE

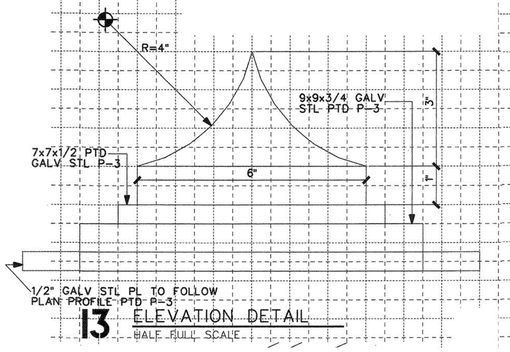

13 ELEVATION DETAIL
HALF FULL SCALE

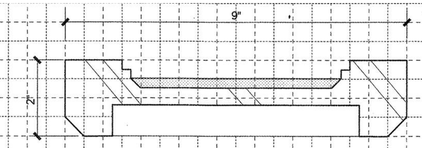

7 CAST IRON MOLDING 7 (CI-7)
HALF FULL SCALE

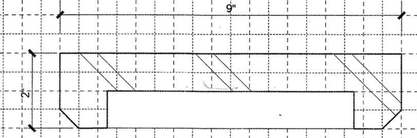

8 CAST IRON MOLDING 8 (CI-8)
HALF FULL SCALE

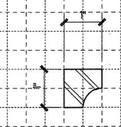

9 CAST IRON MOLDING 9 (CI-9)
HALF FULL SCALE

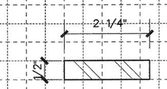

10 CAST IRON MOLDING 10 (CI-10)
HALF FULL SCALE

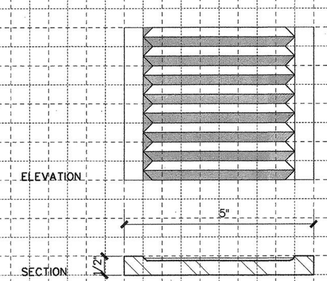

11 CAST IRON MOLDING 11 (CI-11)
HALF FULL SCALE

NOTE:
1. PROFILE SHOWN FOR DESIGN INTENT ACTUAL PROFILES MAY VARY TO FACILITATE AND ACCOMMODATE MANUFACTURING METHODS, ANCHORAGE AND WEATHER TIGHTNESS
2. HALF FULL SCALE DETAILS OVERLAY A 1/2"x1/2" GRID FOR SCALE IDENTIFICATION
3. ALL CAST IRON SHOWN HERE TO BE PTD P-3

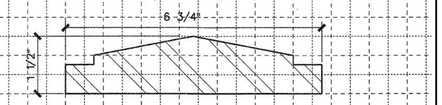

1 CAST IRON MOLDING 1 (CI-1)
HALF FULL SCALE

2 CAST IRON MOLDING 2 (CI-2)
HALF FULL SCALE

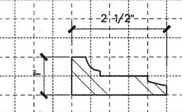

3 CAST IRON MOLDING 3 (CI-3)
HALF FULL SCALE

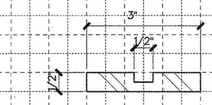

4 CAST IRON MOLDING 4 (CI-4)
HALF FULL SCALE

5A

5 CAST IRON MOLDING 5 (CI-5)
HALF FULL SCALE

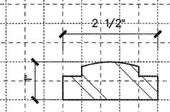

6 CAST IRON MOLDING 6 (CI-6)
HALF FULL SCALE

DESIGN BY:									
DRAWN BY:									
CHECKED BY:									
APPROVED BY:		4	7/3/2023	ISSUED FOR BID	KP	KP	NL		
CDOT/APPROVED BY:		NO.	DATE	REVISIONS	DES.	DRW.	CHK.	DCCO	CDOT

TranSystems
TRANSYSTEMS
222 SOUTH RIVERSIDE PLAZA SUITE 610
CHICAGO, ILLINOIS 60606

LICENSED ARCHITECT
QUENTIN PETERSEN
001.024088
STATE OF ILLINOIS

CDOT
CHICAGO DEPARTMENT OF TRANSPORTATION
DIVISION OF ENGINEERING

STATE / LAKE LOOP ELEVATED STATION
200 NORTH STATE STREET, CHICAGO, IL 60601

ELEVATOR ENCLOSURE DETAILS

CDOT PROJECT D-1-209

DATE: 9/9/2022

SPEC. NO.

DRAWING NO.
AS-502

REVISION NO.4

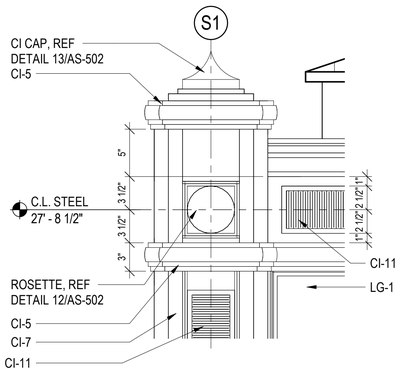

14 ENCLOSURE ELEV DETAIL
1 1/2" = 1'-0"

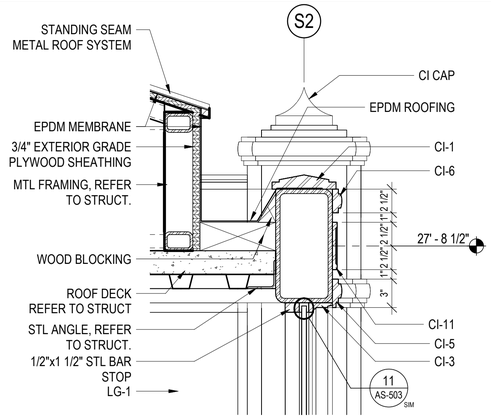

13 ENCLOSURE SECTION DETAIL
1 1/2" = 1'-0"

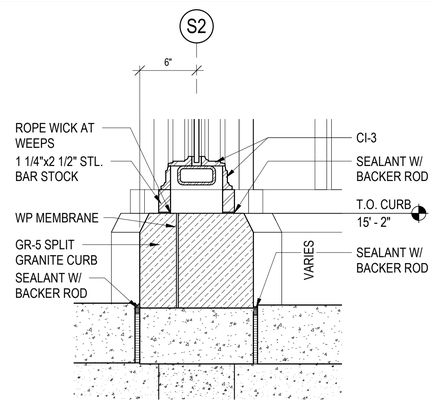

12 ENCLOSURE SECTION DETAIL
1 1/2" = 1'-0"

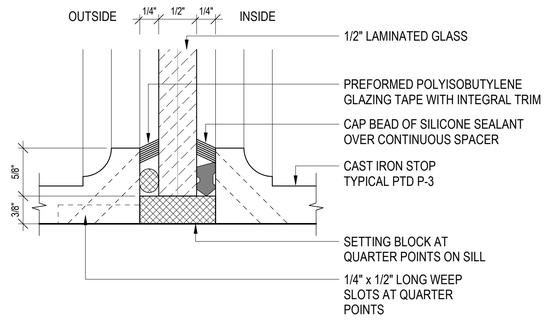

11 PARTIAL SECTION AT GLAZING STOPS
12" = 1'-0"

NOTES:
1. CI COMPONENTS, SEE AS-502
2. ALL EXPOSED STEEL AND CI COMPONENTS TO BE PAINTED P-3.

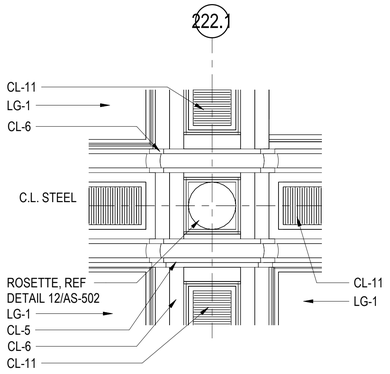

10 ENCLOSURE ELEV DETAIL
1 1/2" = 1'-0"

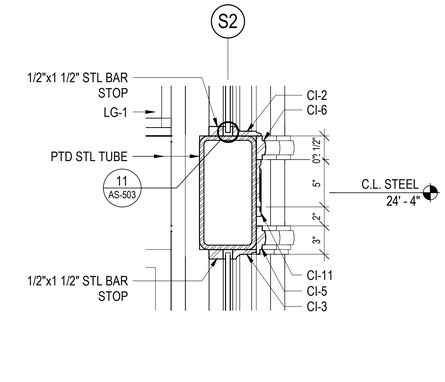

9 ENCLOSURE SECTION DETAIL
1 1/2" = 1'-0"

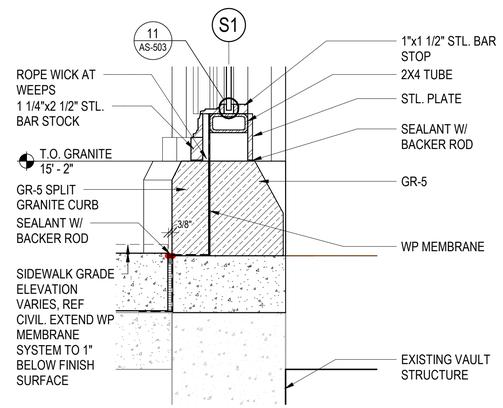

8 ENCLOSURE SECTION DETAIL
1 1/2" = 1'-0"

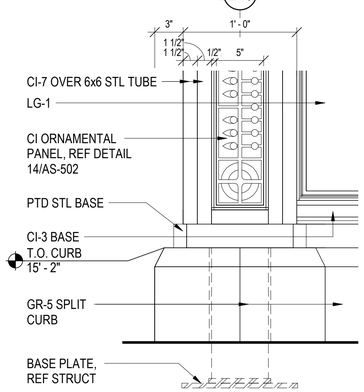

7 ENCLOSURE ELEV DETAIL
1 1/2" = 1'-0"

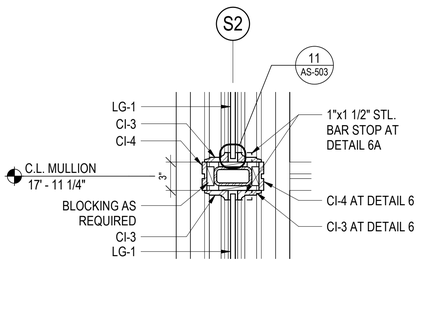

6 & 6A ENCLOSURE SECTION DETAIL
1 1/2" = 1'-0"

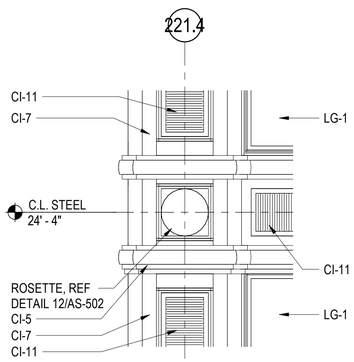

5 ENCLOSURE ELEV DETAIL
1 1/2" = 1'-0"

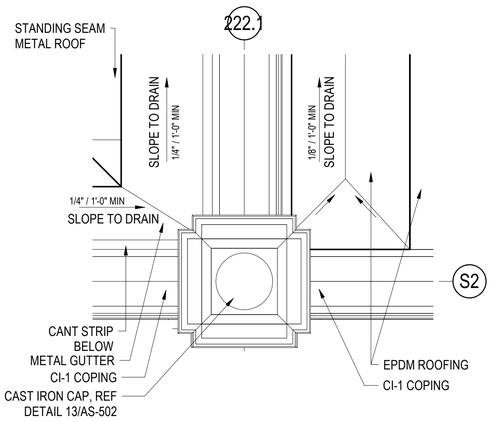

4 ENCLOSURE PLAN DETAIL
1 1/2" = 1'-0"

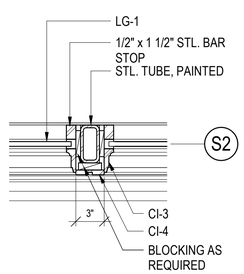

3 ENCLOSURE PLAN DETAIL
1 1/2" = 1'-0"

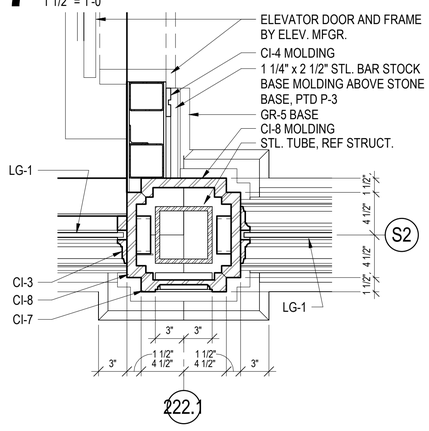

2 ENCLOSURE PLAN DETAIL
1 1/2" = 1'-0"

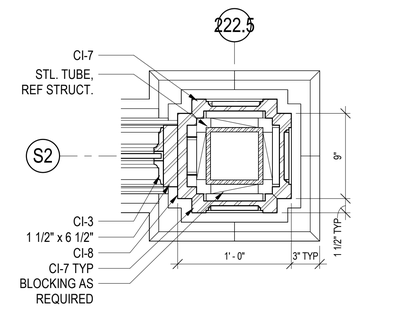

1 ENCLOSURE PLAN DETAIL
1 1/2" = 1'-0"

1 2 3 4 5 6 7 8 9 10 11 12 13 14 15 16 17 18 19 20

DESIGN BY:										
DRAWN BY:										
CHECKED BY:										
APPROVED BY:		4	7/3/2023	ISSUED FOR BID	KP	KP	NL			
CDOT/APPROVED BY:		NO.	DATE	REVISIONS	DES.	DRW.	CHK.	DCCO	CDOT	

TranSystems
TRANSYSTEMS
222 SOUTH RIVERSIDE PLAZA SUITE 610
CHICAGO, ILLINOIS 60606

LICENSED ARCHITECT
QUENTIN PETERSEN
001.024068
STATE OF ILLINOIS

CDOT
CHICAGO DEPARTMENT OF TRANSPORTATION
DIVISION OF ENGINEERING

STATE / LAKE LOOP ELEVATED STATION
200 NORTH STATE STREET, CHICAGO, IL 60601

ELEVATOR ENCLOSURE DETAILS

CDOT PROJECT D-1-209 | DATE: 9/9/2022

SPEC. NO.

DRAWING NO.
AS-503

REVISION NO.4

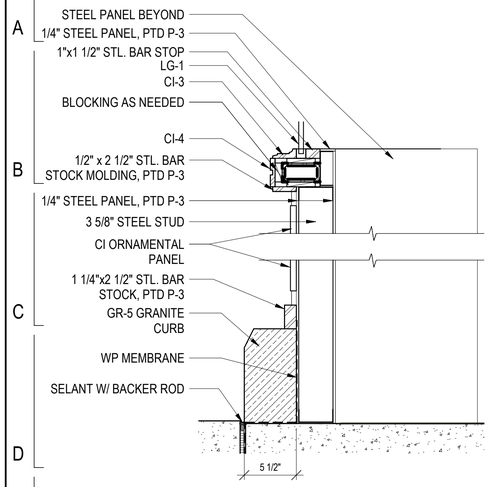

9 SECTION DETAIL
1 1/2" = 1'-0"

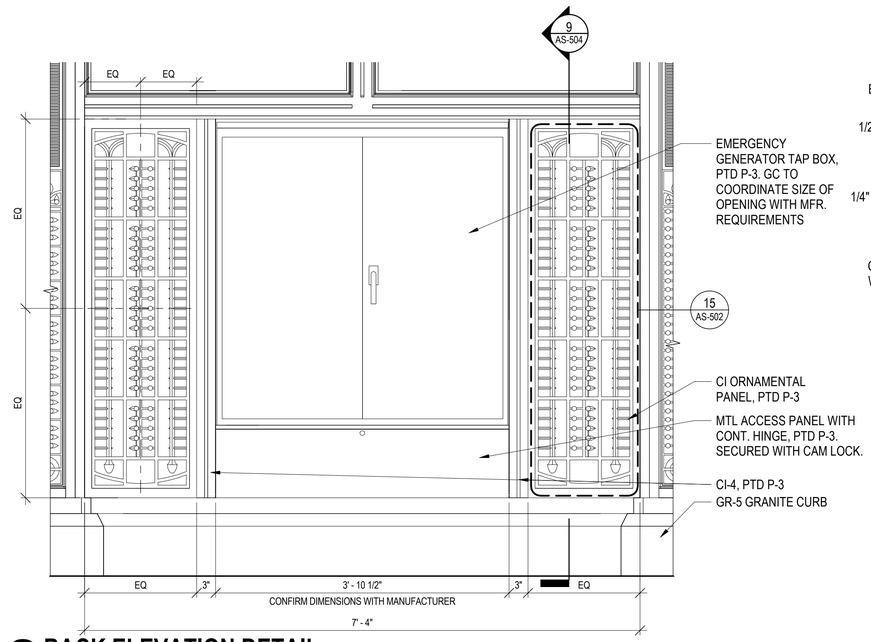

8 BACK ELEVATION DETAIL
1" = 1'-0"

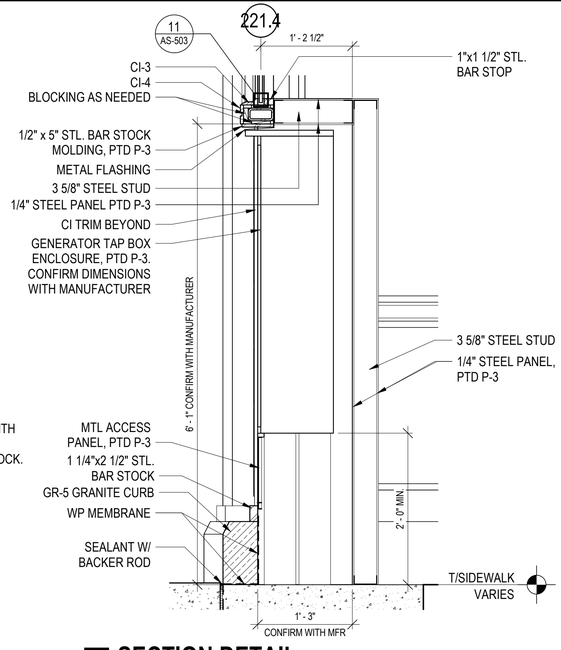

7 SECTION DETAIL
1" = 1'-0"

NOTES:
1. CI COMPONENTS, SEE AS-502
2. ALL EXPOSED STEEL AND CI COMPONENTS TO BE PAINTED P-3.

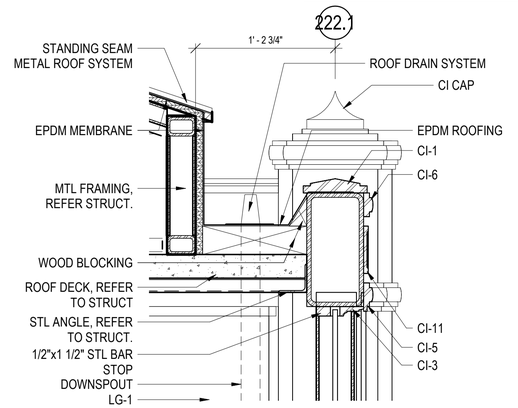

6 ENCLOSURE SECTION DETAIL
1 1/2" = 1'-0"

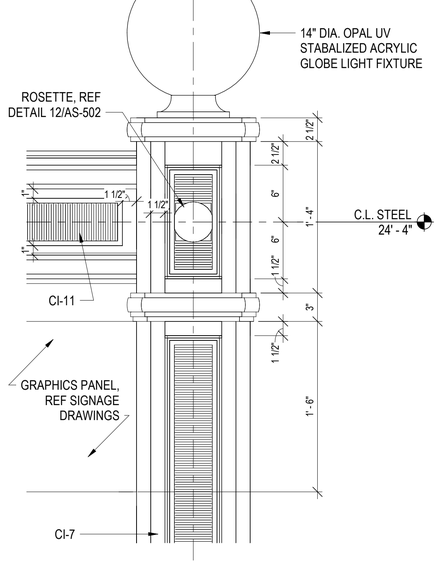

5 ENCLOSURE ELEV DETAIL
1 1/2" = 1'-0"

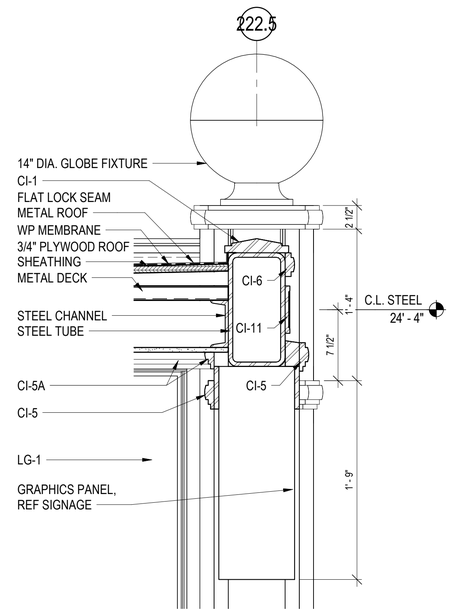

4 ENCLOSURE SECTION DETAIL
1 1/2" = 1'-0"

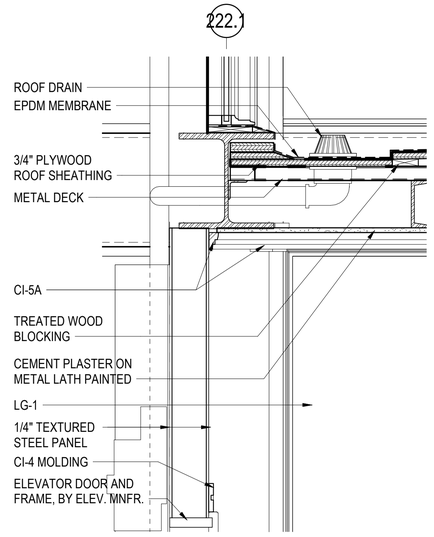

3 ENCLOSURE SECTION DETAIL
1 1/2" = 1'-0"

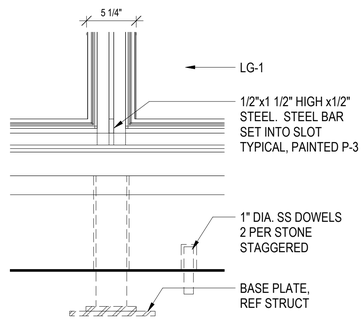

2 ENCLOSURE ELEV DETAIL
1 1/2" = 1'-0"

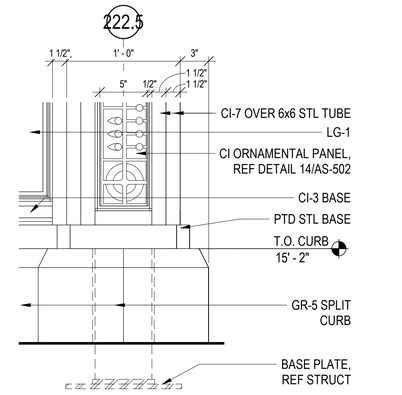

1 ENCLOSURE ELEV DETAIL
1 1/2" = 1'-0"

DESIGN BY:										
DRAWN BY:										
CHECKED BY:										
APPROVED BY:		4	7/3/2023	ISSUED FOR BID	KP	KP	NL			
CDOT/APPROVED BY:		NO.	DATE	REVISIONS	DES.	DRW.	CHK.	DCCO	CDOT	

TranSystems
TRANSYSTEMS
222 SOUTH RIVERSIDE PLAZA SUITE 610
CHICAGO, ILLINOIS 60606

LICENSED ARCHITECT
QUENTIN PETERSEN
001.024068
STATE OF ILLINOIS

CDOT
CHICAGO DEPARTMENT OF TRANSPORTATION
DIVISION OF ENGINEERING

STATE / LAKE LOOP ELEVATED STATION
200 NORTH STATE STREET, CHICAGO, IL 60601

ELEVATOR ENCLOSURE DETAILS

CDOT PROJECT D-1-209

DATE: 9/9/2022

SPEC. NO.

DRAWING NO. AS-504

REVISION NO.4

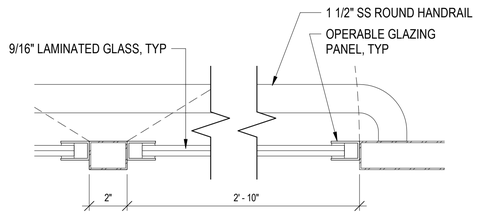

6 ELEVATOR S1 & S2 CAB DETAIL
3" = 1'-0"

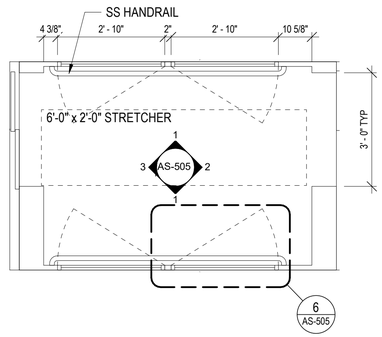

5 ELEVATOR S1 & S2 CAB PLAN
1/2" = 1'-0"

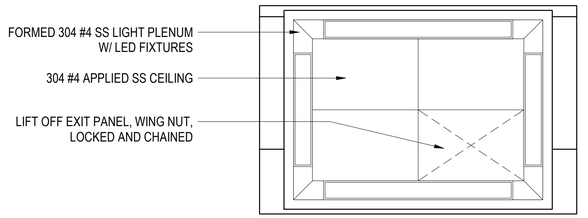

4 ELEVATOR CAB REFLECTED CEILING PLAN
1/2" = 1'-0"

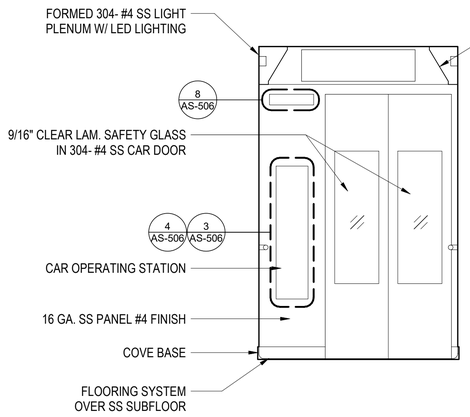

3 ELEVATOR S1 & S2 INTERIOR ELEVATION (TYP.)
1/2" = 1'-0"

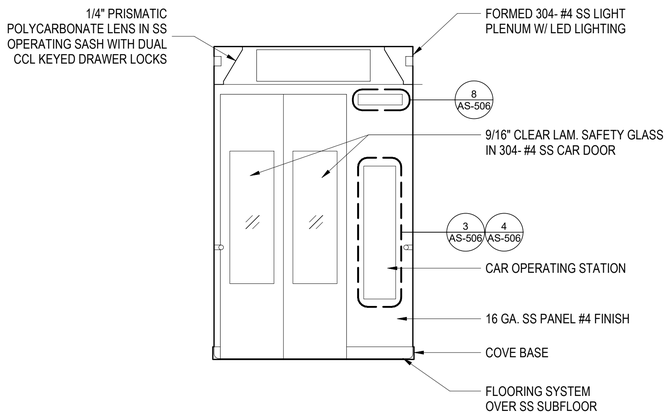

2 ELEVATOR S1 & S2 INTERIOR ELEVATION (TYP.)
1/2" = 1'-0"

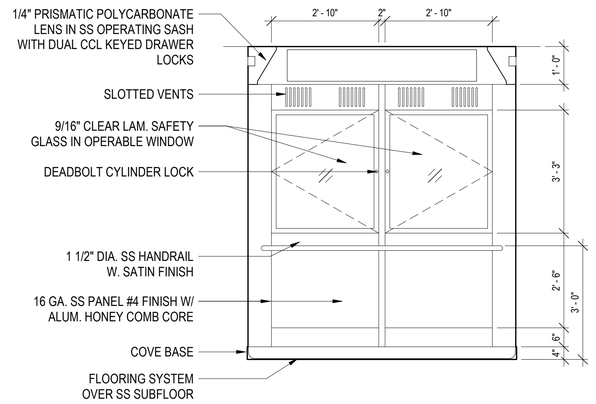

1 ELEVATOR S1 & S2 INTERIOR ELEVATION (TYP.)
1/2" = 1'-0"

DESIGN BY:										
DRAWN BY:										
CHECKED BY:										
APPROVED BY:		4	7/3/2023	ISSUED FOR BID	KP	KP	NL			
CDOT/APPROVED BY:		NO.	DATE	REVISIONS	DES.	DRW.	CHK.	DCCO	CDOT	

TranSystems
TRANSYSTEMS
222 SOUTH RIVERSIDE PLAZA SUITE 610
CHICAGO, ILLINOIS 60606

LICENSED ARCHITECT
QUENTIN PETERSEN
001.024068
STATE OF ILLINOIS

CDOT
CHICAGO DEPARTMENT OF TRANSPORTATION
DIVISION OF ENGINEERING

STATE / LAKE LOOP ELEVATED STATION
200 NORTH STATE STREET, CHICAGO, IL 60601

SPEC. NO.

ELEVATOR CAB DETAILS

DRAWING NO.
AS-505

CDOT PROJECT D-1-209

DATE: 9/9/2022

REVISION NO. 4

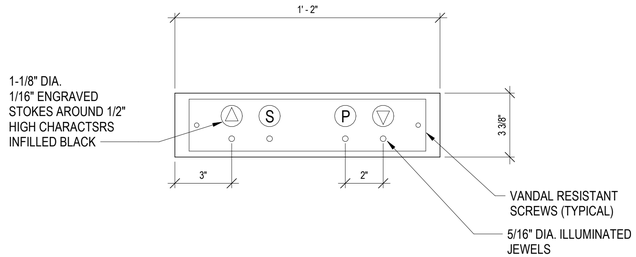

8 ELEVATOR - CAR POSITION INDICATOR
3" = 1'-0"

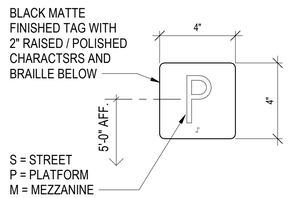

7 ELEVATOR - JAMB TAG
3" = 1'-0"

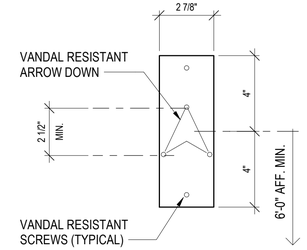

6 ELEVATOR - HALL LANTERN (UP)
3" = 1'-0"

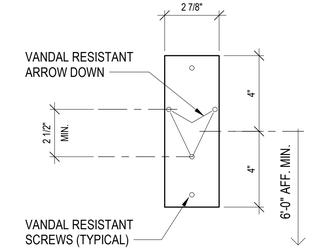

5 ELEVATOR - HALL LANTERN (DOWN)
3" = 1'-0"

NOTES:
1. REF SHEET AS-403 FOR MOUNTING LOCATIONS.

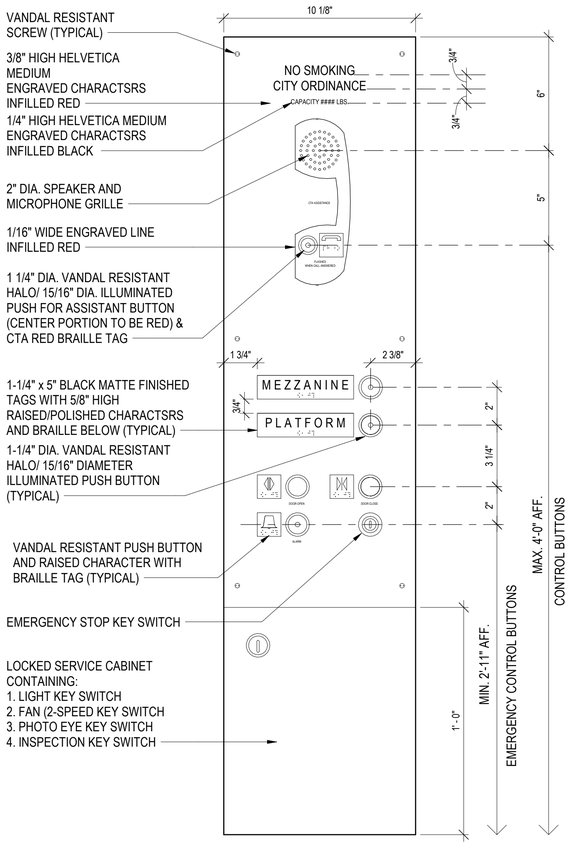

4 ELEVATOR S2 ELEVATOR CAB CALL STATION
3" = 1'-0"

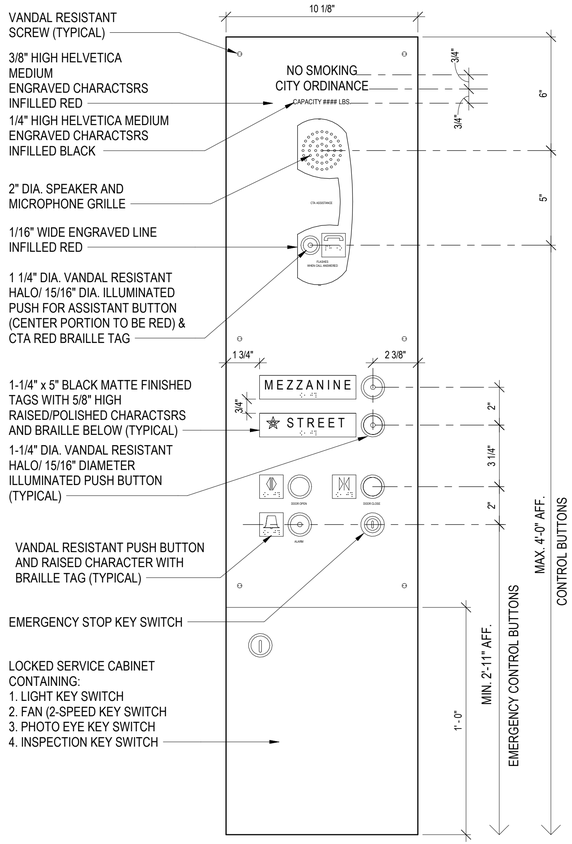

3 ELEVATOR S1 ELEVATOR CAB CALL STATION
3" = 1'-0"

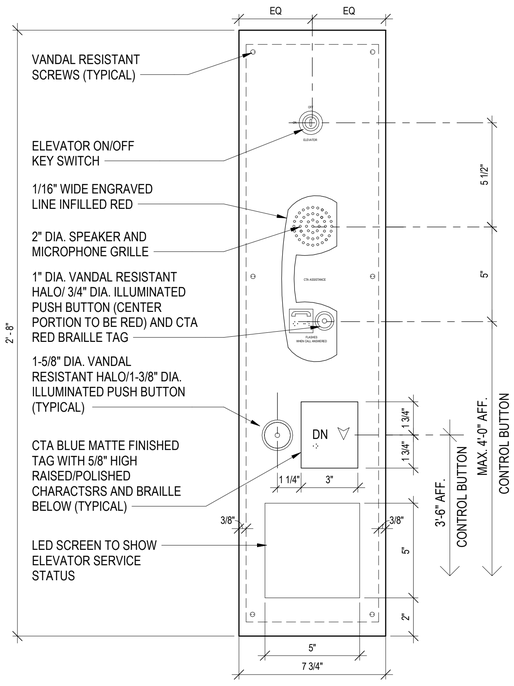

2 ELEVATION - HALL CALL STATION (DOWN)
3" = 1'-0"

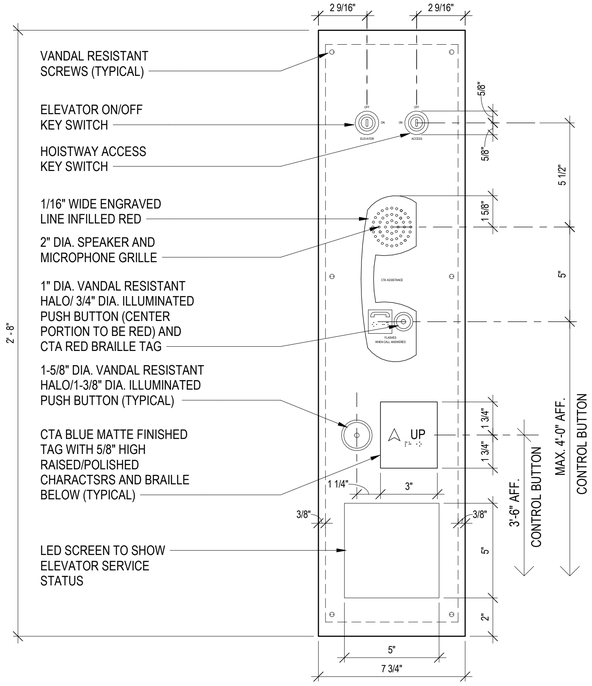

1 ELEVATION - HALL CALL STATION (UP)
3" = 1'-0"

DESIGN BY:										
DRAWN BY:										
CHECKED BY:										
APPROVED BY:		4	7/3/2023	ISSUED FOR BID	KP	KP	NL			
CDOT/APPROVED BY:		NO.	DATE	REVISIONS	DES.	DRW.	CHK.	DCCO	CDOT	

TranSystems
TRANSYSTEMS
222 SOUTH RIVERSIDE PLAZA SUITE 610
CHICAGO, ILLINOIS 60606

LICENSED ARCHITECT
QUENTIN PETERSEN
001.024088
STATE OF ILLINOIS

CDOT
CHICAGO DEPARTMENT
OF TRANSPORTATION
DIVISION OF ENGINEERING

STATE / LAKE LOOP ELEVATED STATION
200 NORTH STATE STREET, CHICAGO, IL 60601

ELEVATOR DETAILS

CDOT PROJECT D-1-209 | DATE: 9/9/2022

SPEC. NO.

DRAWING NO. AS-506

REVISION NO.4

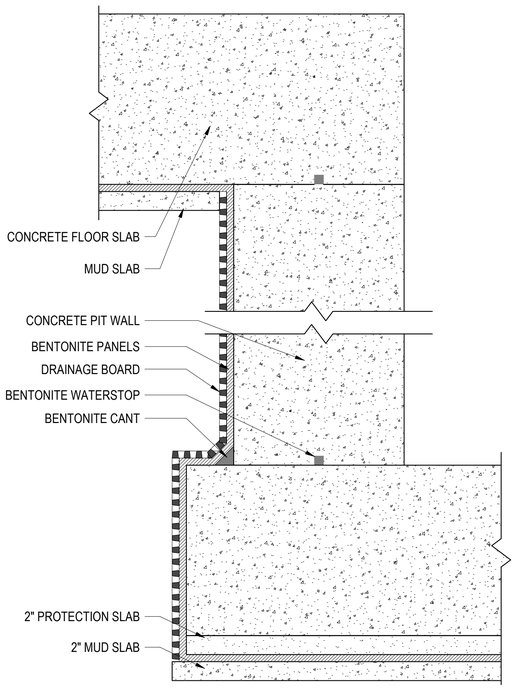

8 WATERPROOFING DETAIL - AT ELEVATOR PIT
N.T.S.

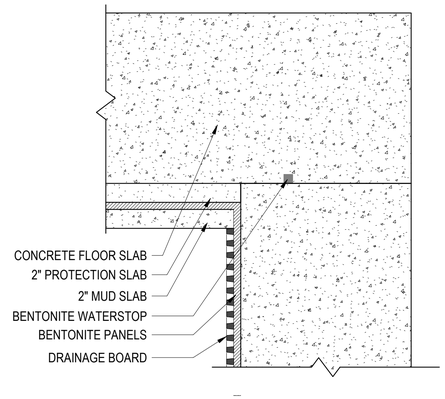

7 WATERPROOFING DETAIL - AT FLOOR-WALL TRANSITION
N.T.S.

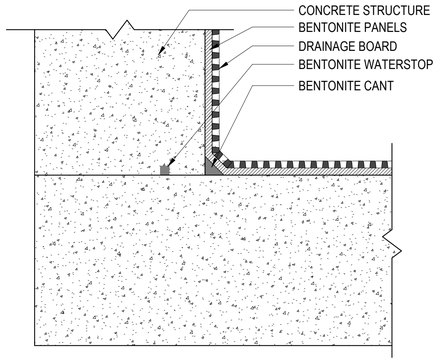

6 WATERPROOFING DETAIL- AT ROOF-WALL TRANSITION
N.T.S.

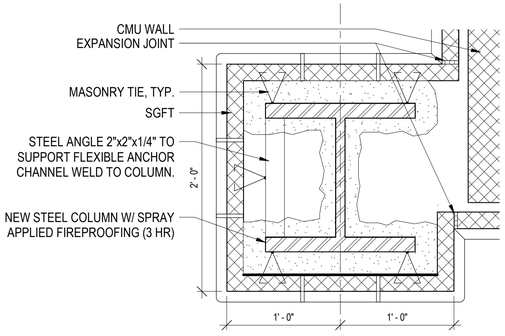

5 PLAN DETAIL
1 1/2" = 1'-0"

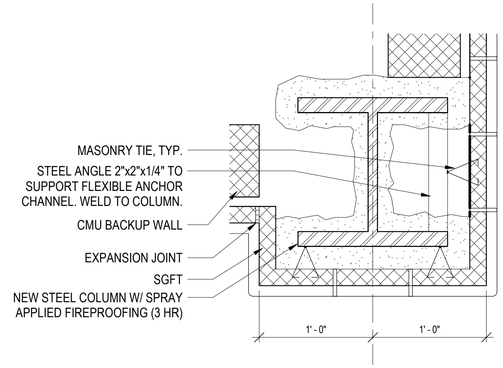

4 PLAN DETAIL
1 1/2" = 1'-0"

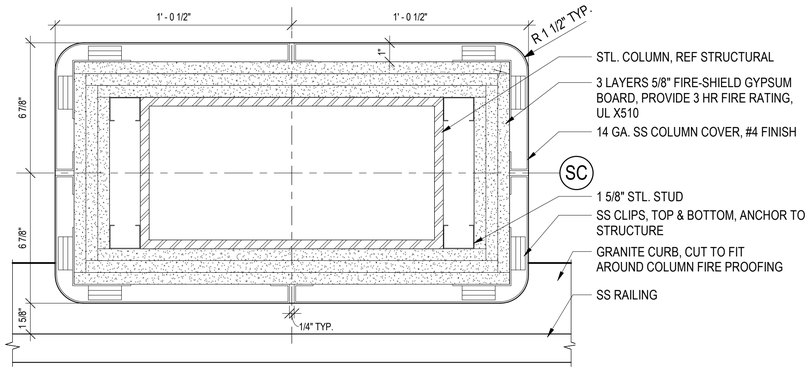

3 COLUMN COVER DETAIL
3" = 1'-0"

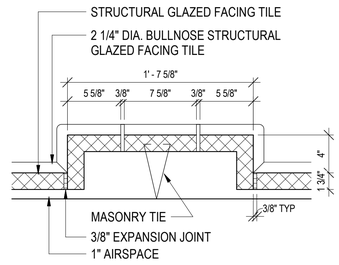

2 PILASTER DETAIL
1 1/2" = 1'-0"

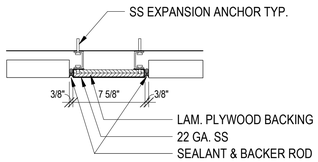

1 S.S. INFILL PANEL DETAIL
1 1/2" = 1'-0"

DESIGN BY:										
DRAWN BY:										
CHECKED BY:										
APPROVED BY:		4	7/3/2023	ISSUED FOR BID	KP	KP	NL			
CDOT/APPROVED BY:		NO.	DATE	REVISIONS	DES.	DRW.	CHK.	DCCO	CDOT	

TranSystems
TRANSYSTEMS
222 SOUTH RIVERSIDE PLAZA SUITE 610
CHICAGO, ILLINOIS 60606

LICENSED ARCHITECT
QUENTIN PETERSEN
001.024088
STATE OF ILLINOIS

CDOT
CHICAGO DEPARTMENT OF TRANSPORTATION
DIVISION OF ENGINEERING

STATE / LAKE LOOP ELEVATED STATION
200 NORTH STATE STREET, CHICAGO, IL 60601

DETAILS

CDOT PROJECT D-1-209

DATE: 9/9/2022

SPEC. NO.

DRAWING NO.
AS-511

REVISION NO.4

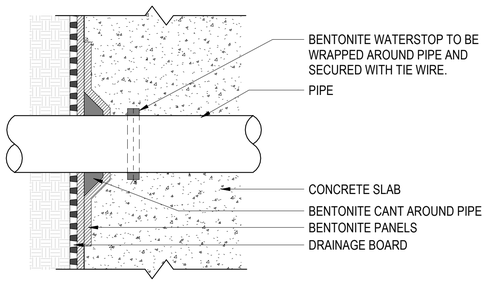

8 WATERPROOFING DETAIL - AT PIPE PENETRATION AT EXT. CONC. WALL
N.T.S.

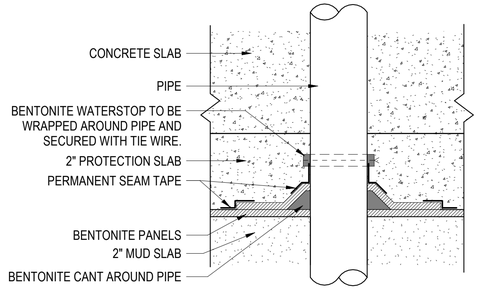

7 WATERPROOFING DETAIL - AT PIPE PENETRATION AT FLOOR SLAB
N.T.S.

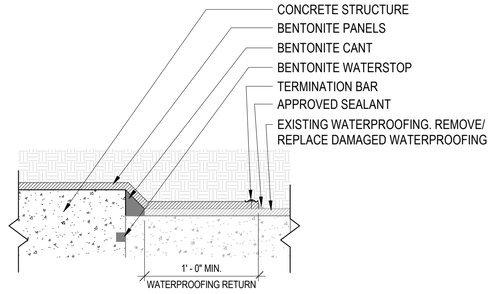

6 WATERPROOFING DETAIL- AT ROOF
N.T.S.

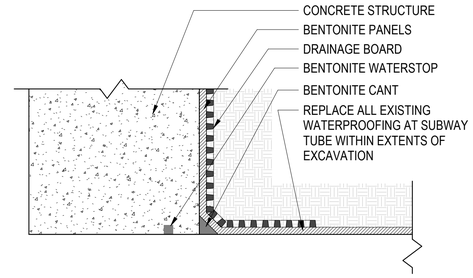

5 WATERPROOFING DETAIL - AT WALL-ROOF TRANSITION AT EXISTING SUBWAY TUBE
N.T.S.

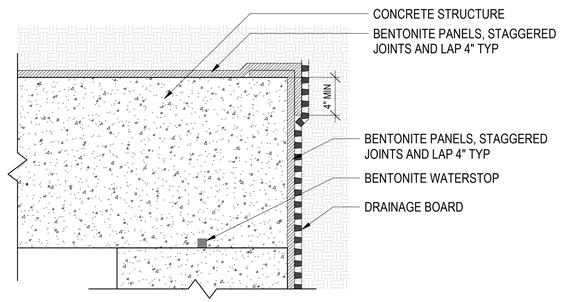

4 WATERPROOFING DETAIL - AT ROOF-WALL TRANSITION
N.T.S.

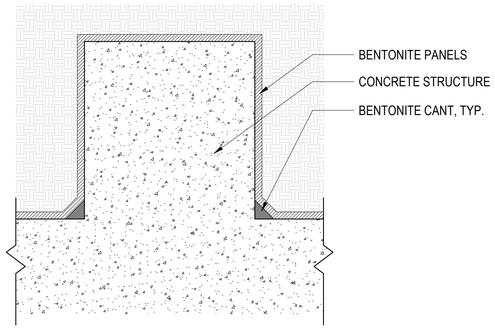

3 WATERPROOFING DETAIL - AT ROOF
N.T.S.

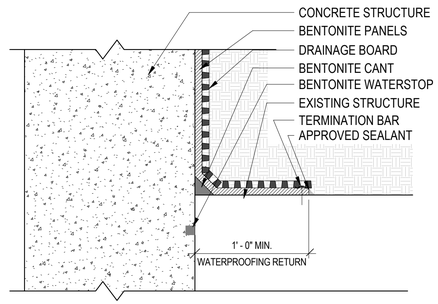

2 WATERPROOFING DETAIL - AT ROOF TRANSITION AT EXISTING MEZZANINE
N.T.S.

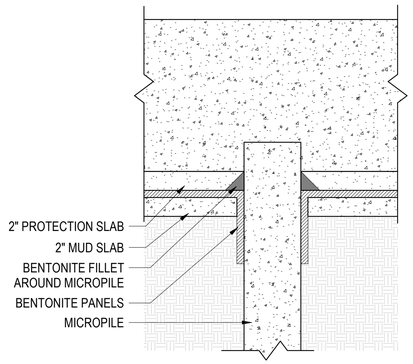

1 WATERPROOFING DETAIL - AT MICROPILE
N.T.S.

DESIGN BY:										
DRAWN BY:										
CHECKED BY:										
APPROVED BY:		4	7/3/2023	ISSUED FOR BID	KP	KP	NL			
CDOT/APPROVED BY:		NO.	DATE	REVISIONS	DES.	DRW.	CHK.	DCCO	CDOT	

TranSystems
TRANSYSTEMS
222 SOUTH RIVERSIDE PLAZA SUITE 610
CHICAGO, ILLINOIS 60606

LICENSED ARCHITECT
QUENTIN PETERSEN
001.024088
STATE OF ILLINOIS

CDOT
CHICAGO DEPARTMENT OF TRANSPORTATION
DIVISION OF ENGINEERING

STATE / LAKE LOOP ELEVATED STATION
200 NORTH STATE STREET, CHICAGO, IL 60601

DETAILS

CDOT PROJECT D-1-209

DATE: 9/9/2022

SPEC. NO.

DRAWING NO.
AS-512

REVISION NO.4

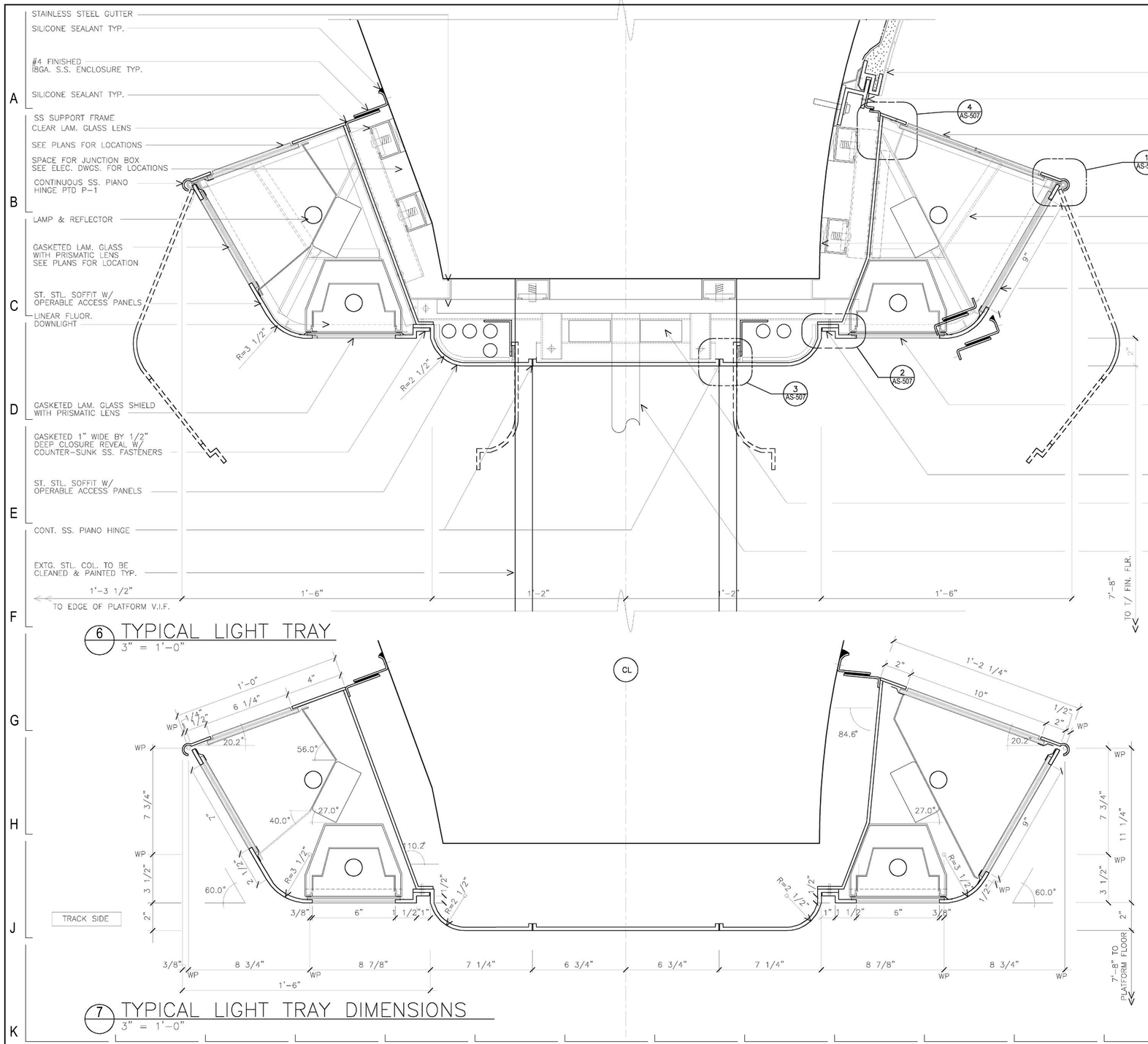

6 TYPICAL LIGHT TRAY
3" = 1'-0"

7 TYPICAL LIGHT TRAY DIMENSIONS
3" = 1'-0"

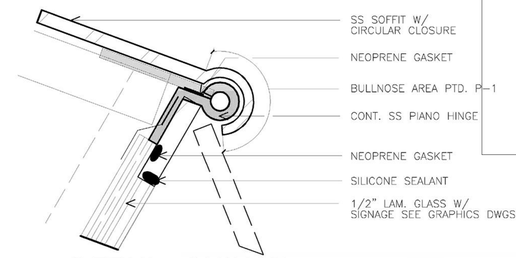

1 DETAIL @HINGE
FULL SIZE

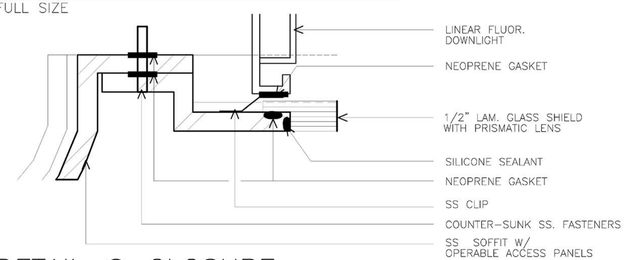

2 DETAIL @ CLOSURE
FULL SIZE

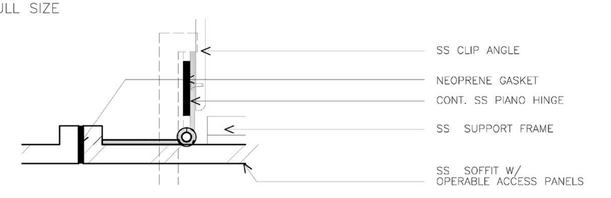

3 DETAIL @ HINGE
FULL SIZE

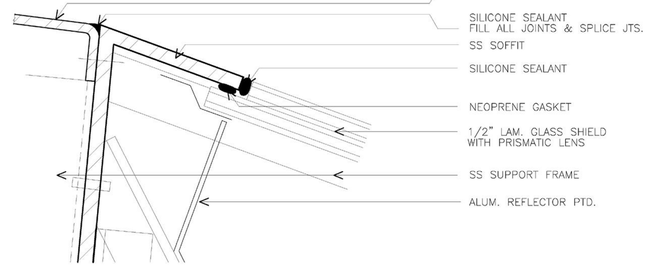

4 DETAIL @ TOP
FULL SIZE

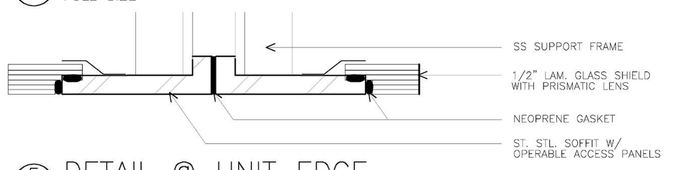

5 DETAIL @ UNIT EDGE
FULL SIZE

NO.	DATE	REVISIONS	DES.	DRW.	CHK.	DCCO	CDOT
4	7/3/2023	ISSUED FOR BID	KP	KP	NL		

DESIGN BY:
DRAWN BY:
CHECKED BY:
APPROVED BY:
CDOT/APPROVED BY:

TRANSYSTEMS
222 SOUTH RIVERSIDE PLAZA SUITE 610
CHICAGO, ILLINOIS 60606

LICENSED ARCHITECT
QUENTIN PETERSEN
001.024068
STATE OF ILLINOIS

CDOT
CHICAGO DEPARTMENT OF TRANSPORTATION
DIVISION OF ENGINEERING

STATE / LAKE LOOP ELEVATED STATION
200 NORTH STATE STREET, CHICAGO, IL 60601

EXISTING LIGHT TRAY DETAILS

CDOT PROJECT D-1-209 | DATE: 9/9/2022

SPEC. NO.

DRAWING NO. AS-513

REVISION NO.4

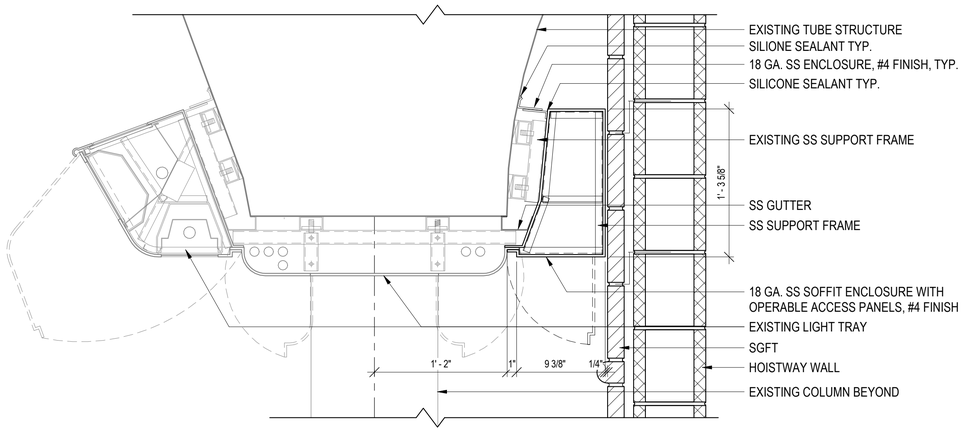

3 LIGHT TRAY AT ELEVATOR
1 1/2" = 1'-0"

NOTES:
1. REFER TO AS-513 FOR ADDITIONAL INFORMATION

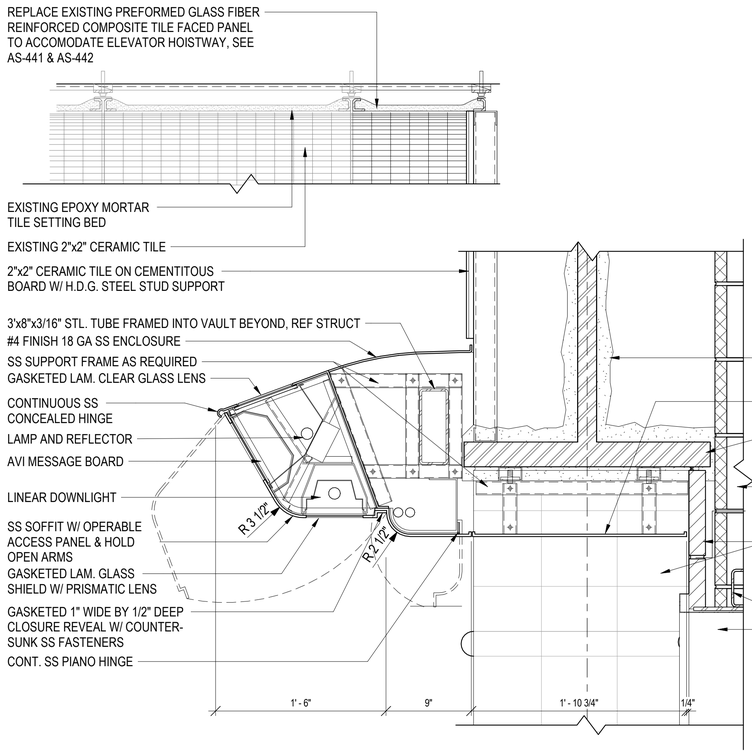

2 LIGHT TRAY AT ELEVATOR
1 1/2" = 1'-0"

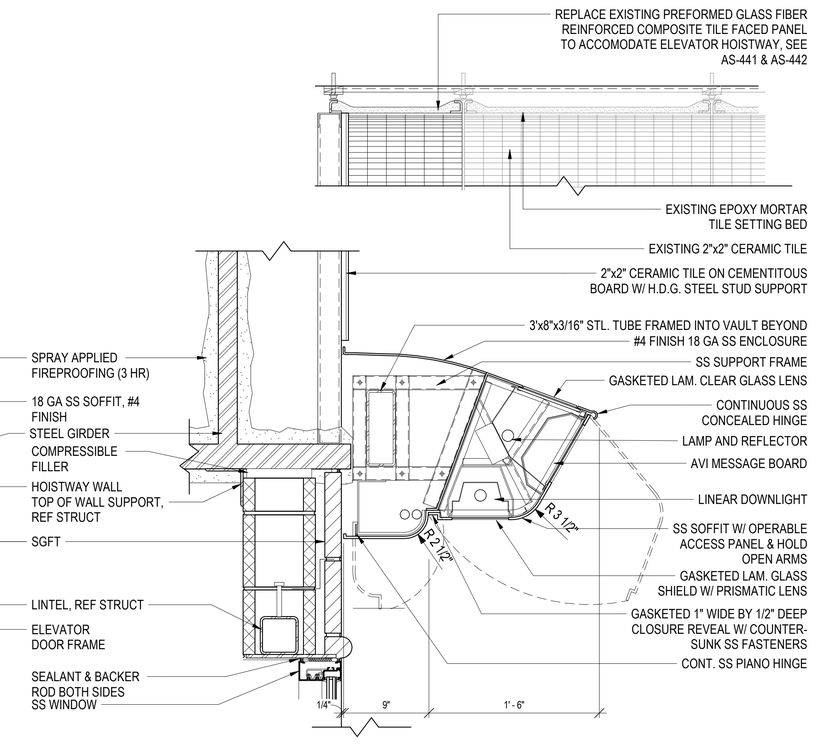

1 LIGHT TRAY AT ELEVATOR
1 1/2" = 1'-0"

DESIGN BY:										
DRAWN BY:										
CHECKED BY:										
APPROVED BY:		4	7/3/2023	ISSUED FOR BID	KP	KP	NL			
CDOT/APPROVED BY:		NO.	DATE	REVISIONS	DES.	DRW.	CHK.	DCCO	CDOT	

TranSystems
TRANSYSTEMS
222 SOUTH RIVERSIDE PLAZA SUITE 610
CHICAGO, ILLINOIS 60606

LICENSED ARCHITECT
QUENTIN PETERSEN
001.024068
STATE OF ILLINOIS

CDOT
CHICAGO DEPARTMENT OF TRANSPORTATION
DIVISION OF ENGINEERING

STATE / LAKE LOOP ELEVATED STATION
200 NORTH STATE STREET, CHICAGO, IL 60601

DETAILS

CDOT PROJECT D-1-209 | DATE: 9/9/2022

SPEC. NO.

DRAWING NO. AS-514

REVISION NO. 4

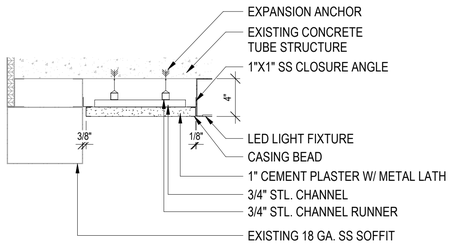

7 SECTION DETAIL 2
1 1/2" = 1'-0"

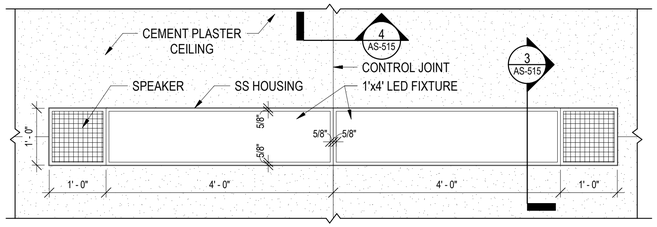

6 REFLECTED CEILING PLAN DETAIL
3/4" = 1'-0"

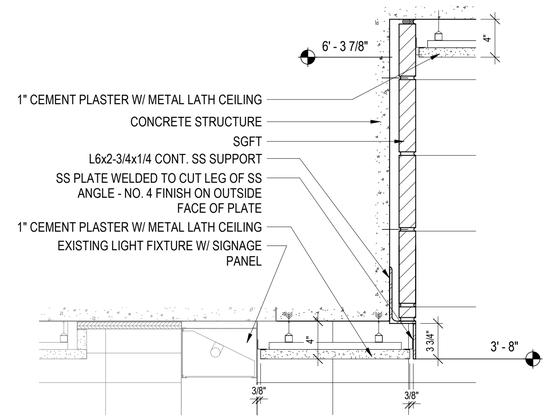

5 SECTION DETAIL 1
1 1/2" = 1'-0"

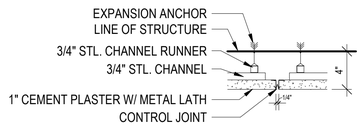

4 SECTION DETAIL
1 1/2" = 1'-0"

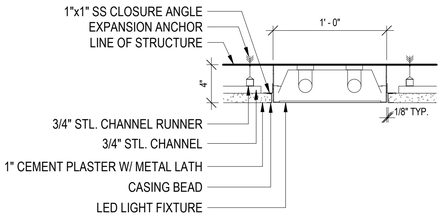

3 SECTION DETAIL
1 1/2" = 1'-0"

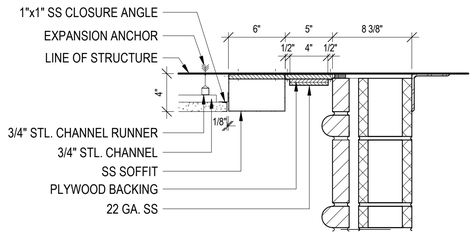

2 SECTION DETAIL
1 1/2" = 1'-0"

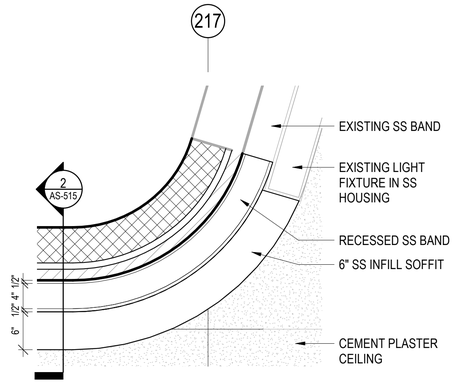

1 REFLECTED CEILING PLAN DETAIL
1" = 1'-0"

DESIGN BY:										
DRAWN BY:										
CHECKED BY:										
APPROVED BY:		4	7/3/2023	ISSUED FOR BID	KP	KP	NL			
CDOT/APPROVED BY:		NO.	DATE	REVISIONS	DES.	DRW.	CHK.	DCCO	CDOT	

TranSystems
TRANSYSTEMS
222 SOUTH RIVERSIDE PLAZA SUITE 610
CHICAGO, ILLINOIS 60606

LICENSED ARCHITECT
QUENTIN PETERSEN
001.024068
STATE OF ILLINOIS

CDOT
CHICAGO DEPARTMENT OF TRANSPORTATION
DIVISION OF ENGINEERING

STATE / LAKE LOOP ELEVATED STATION
200 NORTH STATE STREET, CHICAGO, IL 60601

DETAILS

CDOT PROJECT D-1-209

DATE: 9/9/2022

SPEC. NO.

DRAWING NO.
AS-515

REVISION NO.4

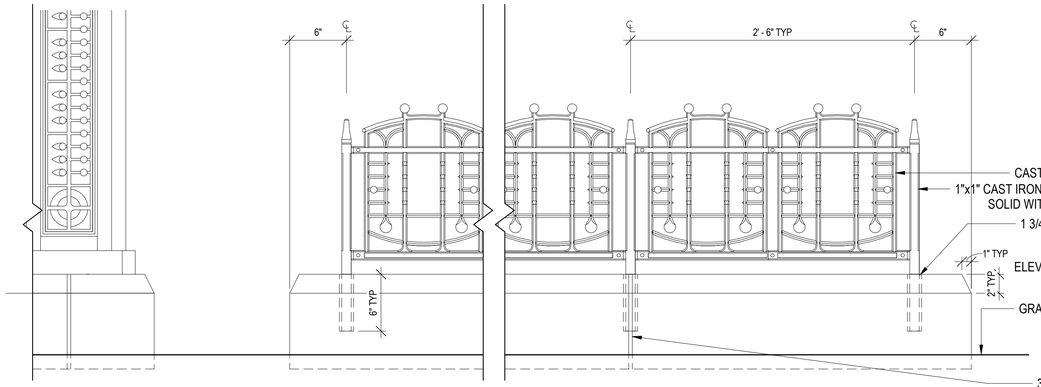

4 PLANTER SIDE ELEVATION
1 1/2" = 1'-0"

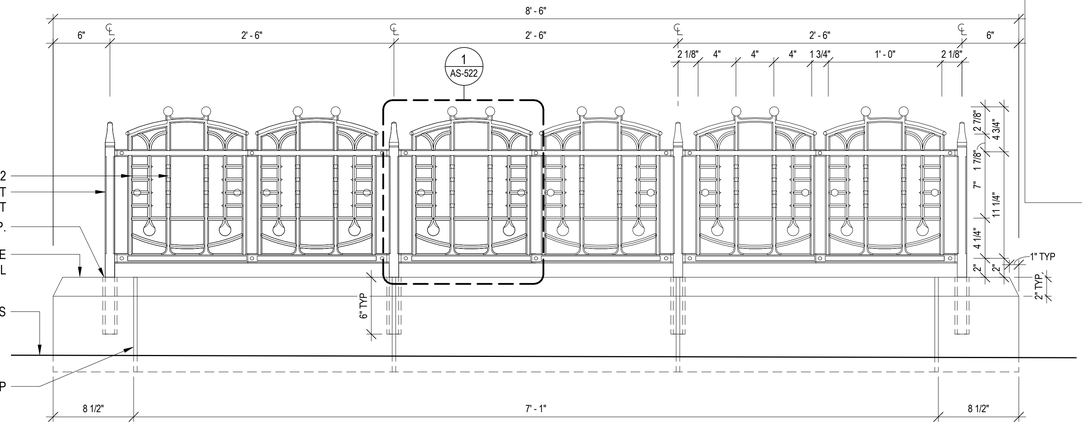

3 PLANTER END ELEVATION
1 1/2" = 1'-0"

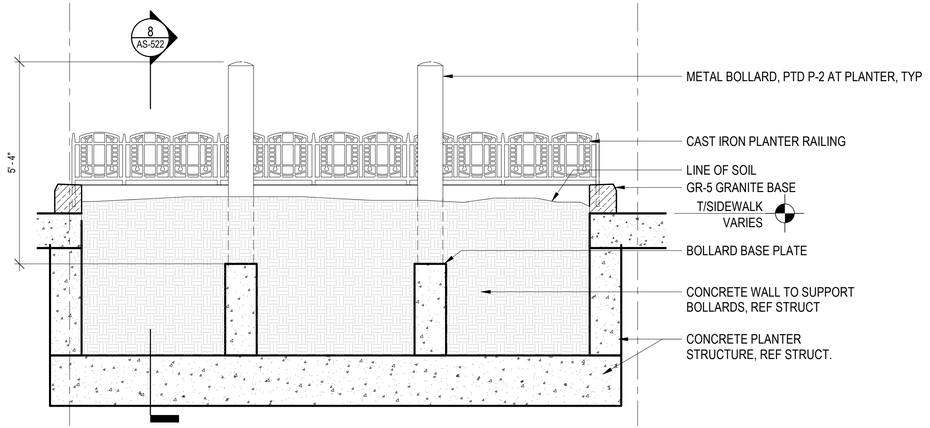

2 PLANTER SECTION
1/2" = 1'-0"

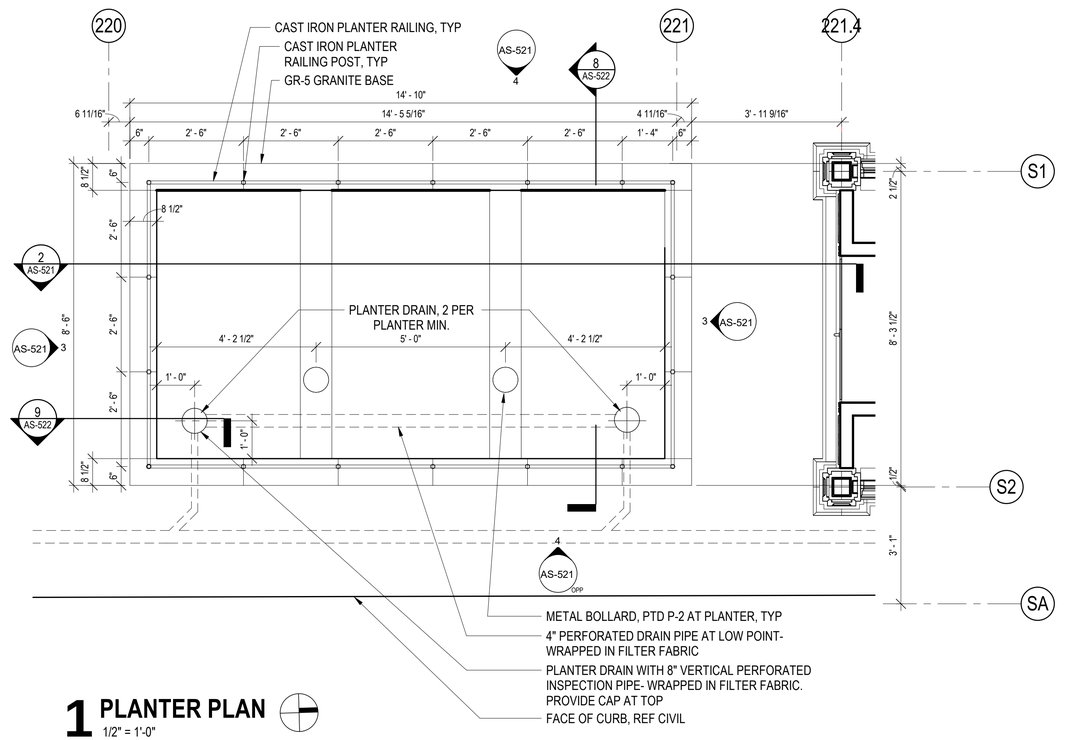

1 PLANTER PLAN
1/2" = 1'-0"

DESIGN BY:										
DRAWN BY:										
CHECKED BY:										
APPROVED BY:		4	7/3/2023	ISSUED FOR BID	KP	KP	NL			
CDOT/APPROVED BY:		NO.	DATE	REVISIONS	DES.	DRW.	CHK.	DCCO	CDOT	

TranSystems
TRANSYSTEMS
222 SOUTH RIVERSIDE PLAZA SUITE 610
CHICAGO, ILLINOIS 60606

LICENSED ARCHITECT
QUENTIN PETERSEN
001.024068
STATE OF ILLINOIS

CDOT
CHICAGO DEPARTMENT OF TRANSPORTATION
DIVISION OF ENGINEERING

STATE / LAKE LOOP ELEVATED STATION
200 NORTH STATE STREET, CHICAGO, IL 60601

PLANTER DETAILS

CDOT PROJECT D-1-209

DATE: 9/9/2022

SPEC. NO.

DRAWING NO.
AS-521

REVISION NO.4

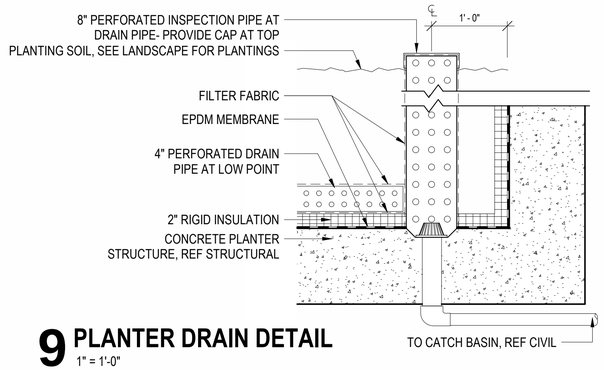

9 PLANTER DRAIN DETAIL
1" = 1'-0"

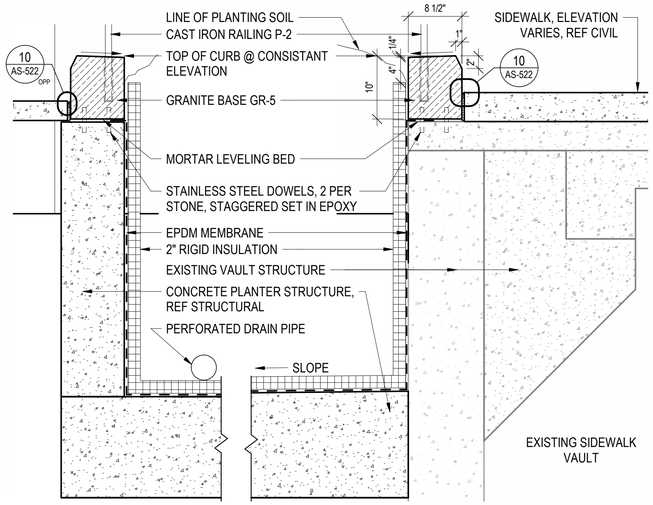

8 SECTION DETAIL AT PLANTER
1" = 1'-0"

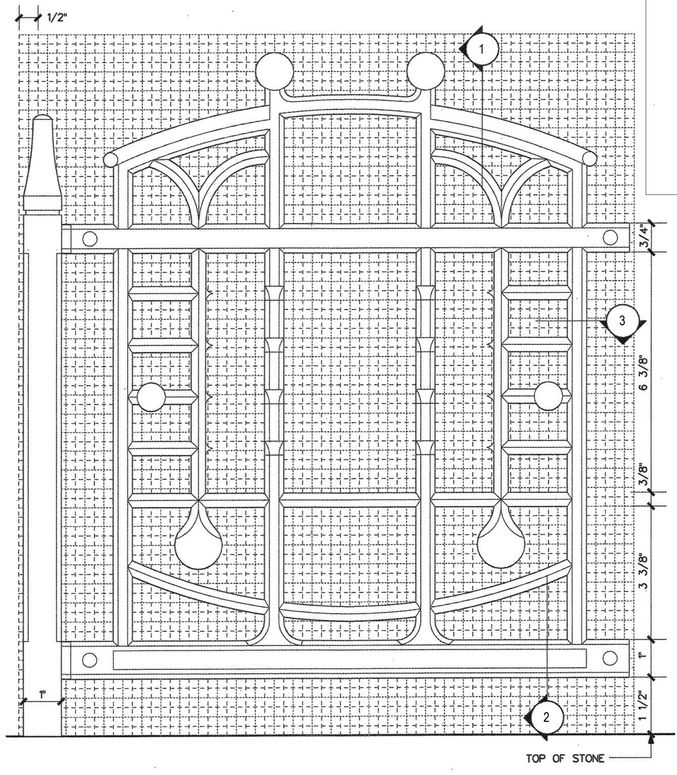

4 PARTIAL RAILING ELEVATION
HALF FULL SCALE

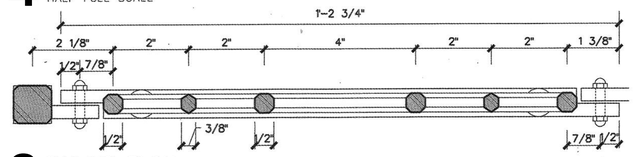

3 RAILING PLAN
HALF FULL SCALE

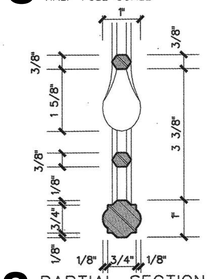

2 PARTIAL SECTION
HALF FULL SCALE

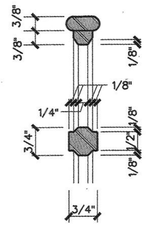

1 PARTIAL SECTION
HALF FULL SCALE

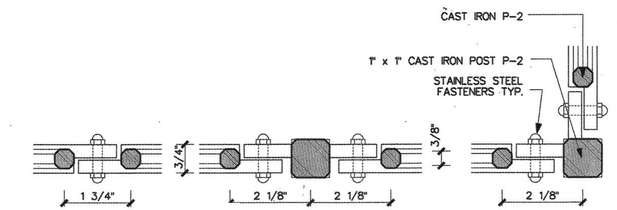

7 RAILING DETAIL HALF FULL SCALE
6 RAILING DETAIL HALF FULL SCALE
5 RAILING DETAIL HALF FULL SCALE

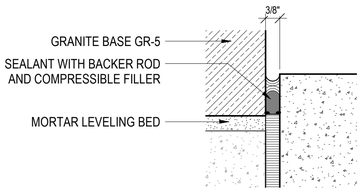

10 DETAIL
6" = 1'-0"

DESIGN BY:										
DRAWN BY:										
CHECKED BY:										
APPROVED BY:		4	7/3/2023	ISSUED FOR BID	KP	KP	NL			
CDOT/APPROVED BY:		NO.	DATE	REVISIONS	DES.	DRW.	CHK.	DCCO	CDOT	

TranSystems
TRANSYSTEMS
222 SOUTH RIVERSIDE PLAZA SUITE 610
CHICAGO, ILLINOIS 60606

LICENSED ARCHITECT
QUENTIN PETERSEN
001.024068
STATE OF ILLINOIS

CDOT
CHICAGO DEPARTMENT OF TRANSPORTATION
DIVISION OF ENGINEERING

STATE / LAKE LOOP ELEVATED STATION
200 NORTH STATE STREET, CHICAGO, IL 60601

PLANTER DETAILS

CDOT PROJECT D-1-209 | DATE: 9/9/2022

SPEC. NO.

DRAWING NO.
AS-522

REVISION NO.4

ROOM FINISH SCHEDULE

ROOM NO.	ROOM NAME	FLOOR	BASE	WALLS								CEILING		REMARKS
				NORTH		SOUTH		WEST		EAST				
				MTRL	FINISH	MTRL	FINISH	MTRL	FINISH	MTRL	FINISH	FINISH	HEIGHT	
M01	ELEC.	EXIST	-	EXIST	-	EXIST	-	EXIST	-	EXIST	-	EXIST	-	
M02	LIGHT SWITCH ROOM	EXIST	-	EXIST	-	EXIST	-	EXIST	-	EXIST	-	EXIST	-	
M03	FIBER OPTICS	EXIST	-	EXIST	-	EXIST	-	EXIST	-	EXIST	-	EXIST	-	
M04	KIOSK	EXIST	-	EXIST	-	EXIST	-	EXIST	-	EXIST	-	EXIST	-	
M05	SWITCHBOARD ROOM	EXIST	-	EXIST	-	EXIST	-	EXIST	-	EXIST	-	EXIST	-	
M06	CECO	EXIST	-	EXIST	-	EXIST	-	EXIST	-	EXIST	-	EXIST	-	
M07	PLUMBING	CONC	-	CMU	-	CONC	-	CMU	-	CONC	-	EXP	-	
M08	UNPAID	GR	SGFT	SGFT		SGFT		SGFT		SGFT		CP	7'-8"	
M09	PAID	GR	SGFT	SGFT		SGFT		SGFT		SGFT		CP	7'-8"	
M10	CORRIDOR	GR	SGFT	-		SGFT		SGFT		SGFT		CP	7'-8"	
M12	TOILET CORRIDOR	EXIST	-	EXIST	-	EXIST	-	EXIST	-	EXIST	-	EXIST	-	
M13	TOILET	EXIST	-	EXIST	-	EXIST	-	EXIST	-	EXIST	-	EXIST	-	
M14	STORAGE	EXIST	-	EXIST	-	EXIST	-	EXIST	-	EXIST	-	EXIST	-	
M15	JANITOR STORAGE	EXIST	-	EXIST	-	EXIST	-	EXIST	-	EXIST	-	EXIST	-	
M16	SEWAGE EJECTOR ROOM	EXIST	-	EXIST	-	EXIST	-	EXIST	-	EXIST	-	EXIST	-	
M17	STORAGE	CONC	-	CMU	P-1	EXIST	-	EXIST	-	CMU	P-1	EXP	-	
M18	CORRIDOR	GR	SGFT/GR	-		-		SGFT		SGFT		CP	7'-8"	
MS1	ELEV MACHINE ROOM	CONC	-	CMU	P-1	CMU	P-1	CONC	P-1	CMU	P-1	EXP	-	
MS2	ELEV MACHINE ROOM	CONC	-	CMU	P-1	CONC	P-1	CONC	P-1	CONC	P-1	EXP	-	
P01	BREAKER ROOM	EXIST	-	EXIST	-	EXIST	-	EXIST	-	EXIST	-	EXIST	-	
P02	ESC ROOM	EXIST	-	EXIST	-	EXIST	-	EXIST	-	EXIST	-	EXIST	-	
P03	SIGNAL ROOM	EXIST	-	EXIST	-	EXIST	-	EXIST	-	EXIST	-	EXIST	-	
P04	ETS ROOM	EXIST	-	EXIST	-	EXIST	-	EXIST	-	EXIST	-	EXIST	-	
P05	ELEC ROOM TUBE VENT	EXIST	-	EXIST	-	EXIST	-	EXIST	-	EXIST	-	EXIST	-	
P06	VESTIBULE	EXIST	-	EXIST	-	EXIST	-	EXIST	-	EXIST	-	EXIST	-	
P07	FAN ROOM	EXIST	-	EXIST	-	EXIST	-	EXIST	-	EXIST	-	EXIST	-	
P08	ESC ROOM	EXIST	-	EXIST	-	EXIST	-	EXIST	-	EXIST	-	EXIST	-	
P09	PLATFORM	GR	SGFT	-	-	-	-	-	-	-	-	EXIST	-	

REFER TO AS-431 & AS-432 FOR FLOOR FINISH PATTERN

MATERIAL KEY

ABBREVIATION	DESCRIPTION
CMU	CONCRETE MASONRY UNITS
CONC	CAST IN PLACE CONCRETE
CP	CEMENT PLASTER
EXIST	EXISTING
EXP	EXPOSED STRUCTURE
GL-1	CLEAR LAMINATED GLASS
GR-1	GRANITE VELVET FINISH - MATCH EXISTING TEXAS PINK
GR-2	GRANITE VELVET FINISH - MATCH EXISTING BRIGHT RED
GR-3	GRANITE FLAMED FINISH - MATCH EXISTING TEXAS PINK
GR-4	GRANITE POLISHED FINISH - MATCH EXISTING BRIGHT RED
GR-5	GRANITE POLISHED FINISH - MATCH EXISTING AT ESCALATOR ENCLOSURE
P-1	PAINT - WHITE TO MATCH PPG1100-1
P-2	PAINT - COLOR TO MATCH FEDERAL STANDARD COLOR 595B "14056" SEMI-GLOSS FINISH
P-3	PAINT - COLOR TO MATCH PPG DURANAR COPPER METALLIC UC52408XL SEMI-GLOSS FINISH
SGFT	STRUCTURAL GLAZED FACING TILE
SS	STAINLESS STEEL - NUMBER 4 SATIN - UNLESS NOTED OTHERWISE

*ALL SGFT & GRANITE TYPES, COLORS, AND FINISHES TO MATCH EXISTING.

DOOR SCHEDULE

DOOR NO.	ROOM	WIDTH	HEIGHT	THICK.	DOOR STYLE									REMARKS
					DOOR			FRAME		DETAILS		RATING	HARDWARE SET NO.	
					TYPE	MTRL	FINISH	MTRL	FINISH	JAMB	HEAD			
MS1	ELEV MACHINE ROOM	3' - 0"	6' - 8"	1 3/4"	D1	SS	NO. 4	SS	NO. 4	3/AS-601	2/AS-601	45 MIN	11	
MS2	ELEV MACHINE ROOM	3' - 0"	6' - 8"	1 3/4"	D1	SS	NO. 4	SS	NO. 4	3/AS-601	2/AS-601	45 MIN	11	

DOOR SCHEDULE - ACCESS PANELS

DOOR NO.	ROOM	WIDTH	LENGTH	DOOR STYLE					REMARKS
				DOOR	FRAME	DETAIL	RATING	HARDWARE SET NO.	
				MTRL	MTRL				
M18	CORRIDOR	2' - 0"	2' - 0"	SS/GR	SS	12/AS-601	-	24	FLOOR ACCESS PANEL
P01	PLATFORM	3' - 0"	3' - 0"	SS/GR	SS	12/AS-601	-	24	FLOOR ACCESS PANEL

WINDOW SCHEDULE

MARK	TYPE	ROUGH OPENING		MATERIAL	SILL HEIGHT (A.F.F.)	DETAIL			FIRE RATING	REMARKS
		WIDTH	HEIGHT			HEAD	SILL	JAMB		
W1	A	3' - 4"	5' - 6 5/8"	SS	1' - 0 3/4"	5/AS-601	7/AS-601	6/AS-601	1 HR	FIXED
W2	A	3' - 4"	5' - 6 5/8"	SS	1' - 0 3/4"	8/AS-601	10/AS-601	9/AS-601	1 HR	FIXED
W3	A	3' - 4"	5' - 6 5/8"	SS	1' - 0 3/4"	5/AS-601	7/AS-601	6/AS-601	1 HR	FIXED
W4	A	3' - 4"	5' - 6 5/8"	SS	1' - 0 3/4"	5/AS-601	7/AS-601	6/AS-601	-	FIXED

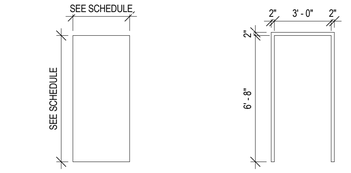

1 DOOR AND FRAME TYPES
1/4" = 1'-0"

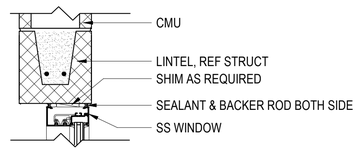

8 WINDOW HEAD DETAIL
1 1/2" = 1'-0"

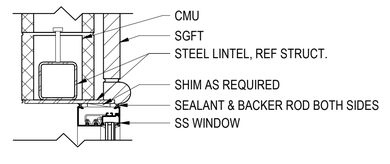

5 WINDOW HEAD DETAIL
1 1/2" = 1'-0"

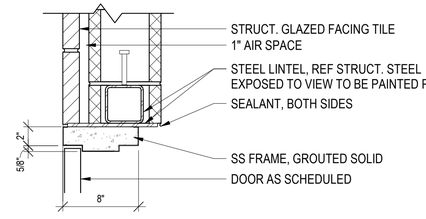

2 DOOR HEAD
1 1/2" = 1'-0"

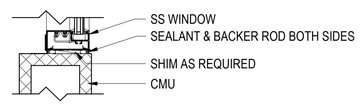

9 WINDOW JAMB DETAIL
1 1/2" = 1'-0"

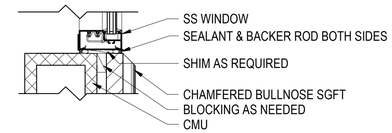

6 WINDOW JAMB DETAIL
1 1/2" = 1'-0"

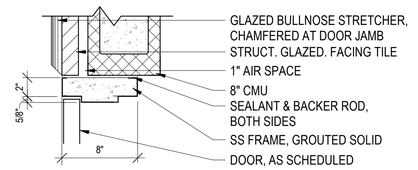

3 DOOR JAMB
1 1/2" = 1'-0"

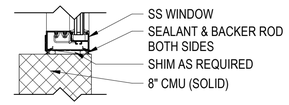

10 WINDOW SILL DETAIL
1 1/2" = 1'-0"

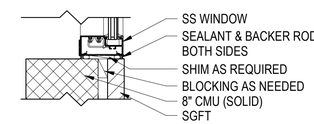

7 WINDOW SILL DETAIL
1 1/2" = 1'-0"

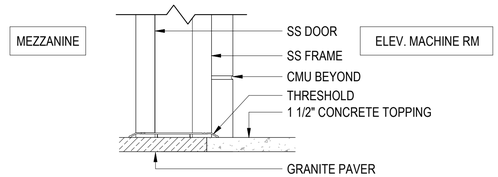

4 DOOR SILL
1 1/2" = 1'-0"

11 WINDOW TYPES
1/4" = 1'-0"

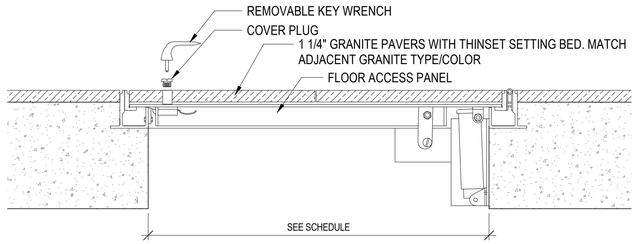

12 FLOOR ACCESS PANEL
1 1/2" = 1'-0"

DESIGN BY:										TranSystems	
DRAWN BY:											
CHECKED BY:											
APPROVED BY:		4	7/3/2023	ISSUED FOR BID	KP	KP	NL			TRANSYSTEMS 222 SOUTH RIVERSIDE PLAZA SUITE 610 CHICAGO, ILLINOIS 60606	
CDOT/APPROVED BY:		NO.	DATE	REVISIONS	DES.	DRW.	CHK.	DCCO	CDOT		

LICENSED ARCHITECT — QUENTIN PETERSEN 001.024068 — STATE OF ILLINOIS

CDOT — CHICAGO DEPARTMENT OF TRANSPORTATION — DIVISION OF ENGINEERING

STATE / LAKE LOOP ELEVATED STATION
200 NORTH STATE STREET, CHICAGO, IL 60601

SUBWAY ROOM FINISH & WINDOW/DOOR SCHEDULES

CDOT PROJECT D-1-209 | DATE: 9/9/2022

SPEC. NO.

DRAWING NO. AS-601

REVISION NO.4

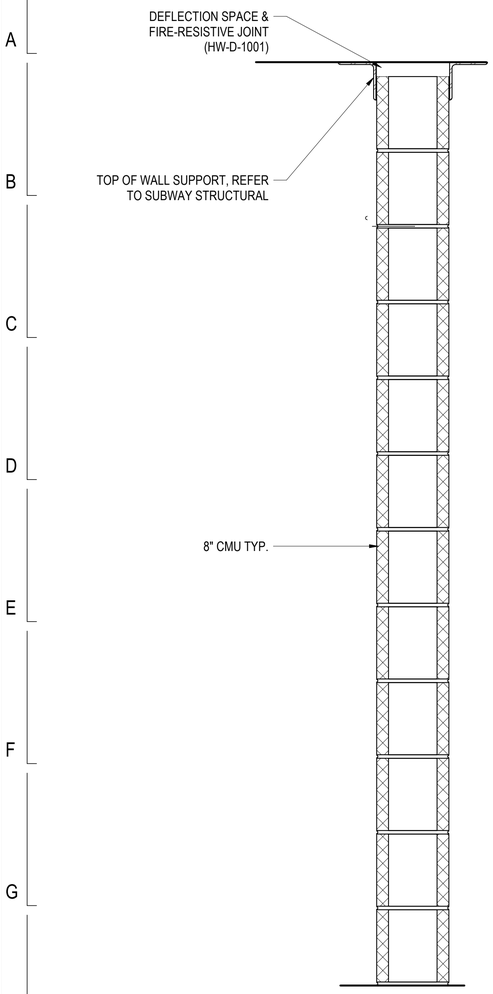

D CMU PARTITION
8" CMU

D1 1 HR CMU PARTITION
8" CMU
60 MIN. (UL No. U905)

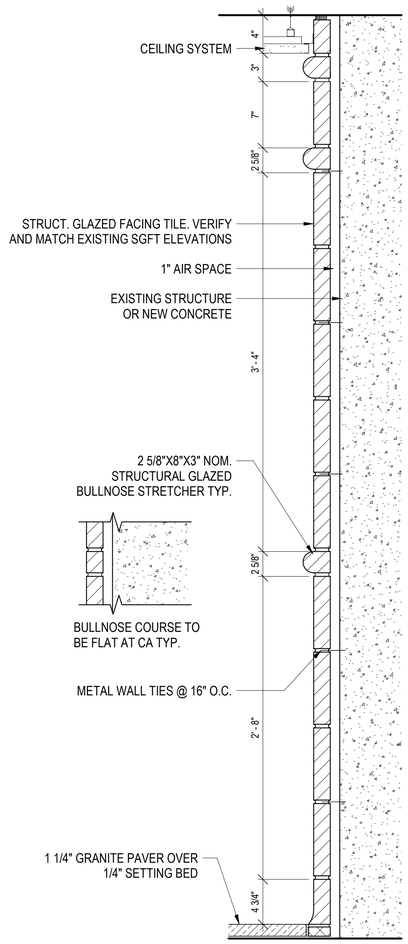

C SGFT AT CONCRETE WALLS
2" NOMINAL STRUCT. GLAZED. FACING TILE

CA SGFT AT CONCRETE WALLS
2" NOMINAL STRUCT. GLAZED. FACING TILE
FLAT BULLNOSE COURSE

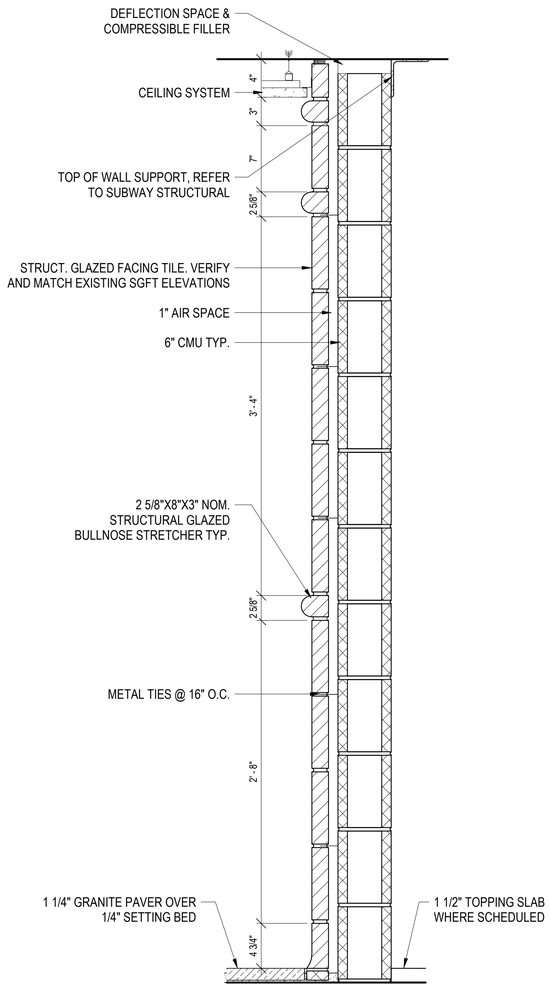

B CMU PARTITION
6" CMU / 2" NOMINAL STRUCT. GLAZED. FACING TILE

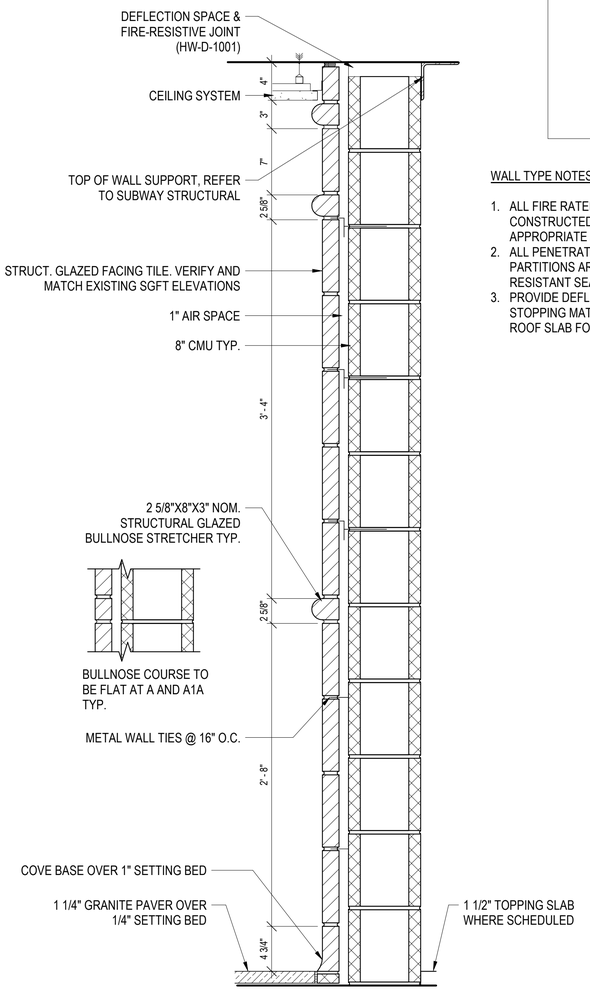

A CMU PARTITION
8" CMU / 2" NOMINAL STRUCT. GLAZED. FACING TILE
FLAT BULLNOSE COURSE

A1 1 HR CMU PARTITION
8" CMU / 2" NOMINAL STRUCT. GLAZED. FACING TILE
60 MIN. (UL No. U905)

A1A 1 HR CMU PARTITION
8" CMU / 2" NOMINAL STRUCT. GLAZED. FACING TILE
60 MIN. (UL No. U905)
FLAT BULLNOSE COURSE

WALL TYPE NOTES

1. ALL FIRE RATED PARTITIONS ARE TO BE CONSTRUCTED IN ACCORDANCE WITH APPROPRIATE UL ASSEMBLY.
2. ALL PENETRATIONS THROUGH RATED PARTITIONS ARE TO BE SEALED WITH FIRE-RESISTANT SEALANT/CAULKING.
3. PROVIDE DEFLECTION SPACE & FIRE STOPPING MATERIAL AT UNDERSIDE OF ROOF SLAB FOR FIRE RATED PARTITION

1 WALL TYPES
1 1/2" = 1'-0"

	NO.	DATE	REVISIONS	DES.	DRW.	CHK.	DCCO	CDOT
DESIGN BY:								
DRAWN BY:								
CHECKED BY:								
APPROVED BY:	4	7/3/2023	ISSUED FOR BID	KP	KP	NL		
CDOT/APPROVED BY:								

TRANSYSTEMS
222 SOUTH RIVERSIDE PLAZA SUITE 610
CHICAGO, ILLINOIS 60606

LICENSED ARCHITECT
QUENTIN PETERSEN
001.024066
STATE OF ILLINOIS

CDOT
CHICAGO DEPARTMENT OF TRANSPORTATION
DIVISION OF ENGINEERING

STATE / LAKE LOOP ELEVATED STATION
200 NORTH STATE STREET, CHICAGO, IL 60601

SUBWAY WALL TYPES

CDOT PROJECT D-1-209

DATE: 9/9/2022

SPEC. NO.

DRAWING NO. AS-602

REVISION NO.4

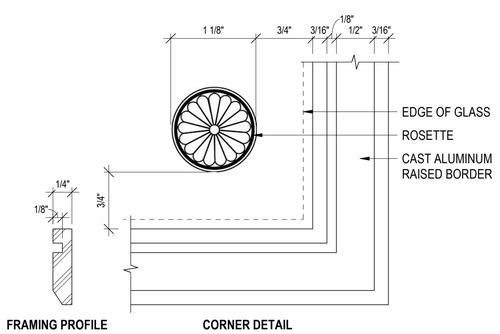

4 SIGNAGE DETAIL
12" = 1'-0"

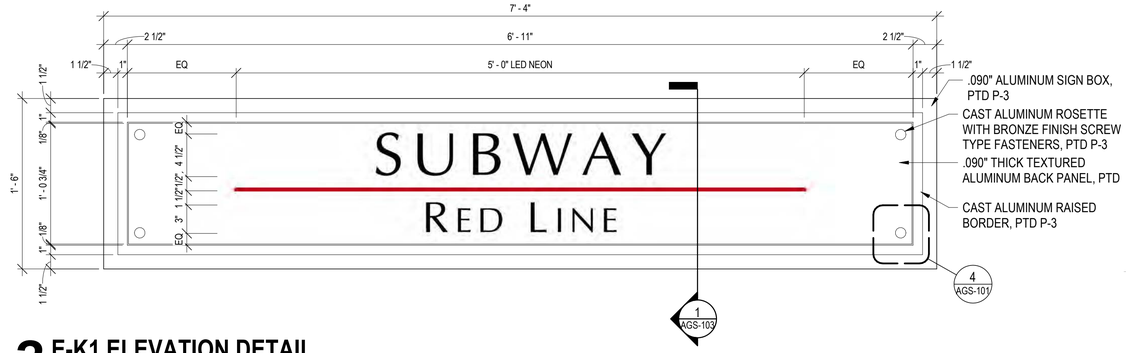

3 E-K1 ELEVATION DETAIL
1 1/2" = 1'-0"

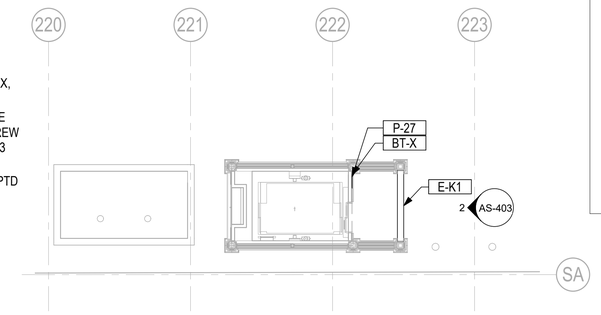

2 SUBWAY STREET LEVEL SIGNAGE PLAN
1/8" = 1'-0"

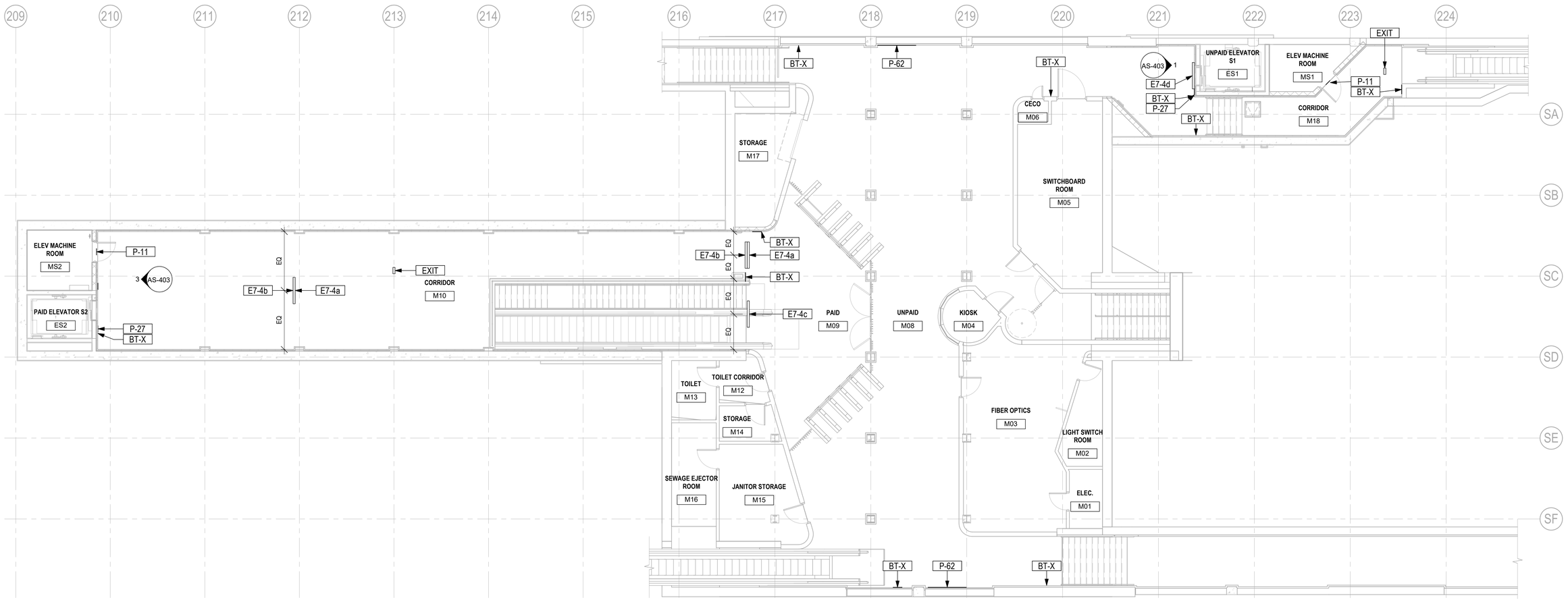

1 SUBWAY MEZZANINE LEVEL SIGNAGE PLAN
1/8" = 1'-0"

DESIGN BY:										
DRAWN BY:										
CHECKED BY:										
APPROVED BY:		4	7/3/2023	ISSUED FOR BID	KP	KP	NL			
CDOT/APPROVED BY:		NO.	DATE	REVISIONS	DES.	DRW.	CHK.	DCCO	CDOT	

TranSystems
TRANSYSTEMS
222 SOUTH RIVERSIDE PLAZA SUITE 610
CHICAGO, ILLINOIS 60606

LICENSED ARCHITECT
QUENTIN PETERSEN
001.024068
STATE OF ILLINOIS

CDOT
CHICAGO DEPARTMENT OF TRANSPORTATION
DIVISION OF ENGINEERING

STATE / LAKE LOOP ELEVATED STATION
200 NORTH STATE STREET, CHICAGO, IL 60601

SUBWAY SIGNAGE PLAN

CDOT PROJECT D-1-209

DATE: 9/9/2022

SPEC. NO.

DRAWING NO.
AGS-101

REVISION NO.4

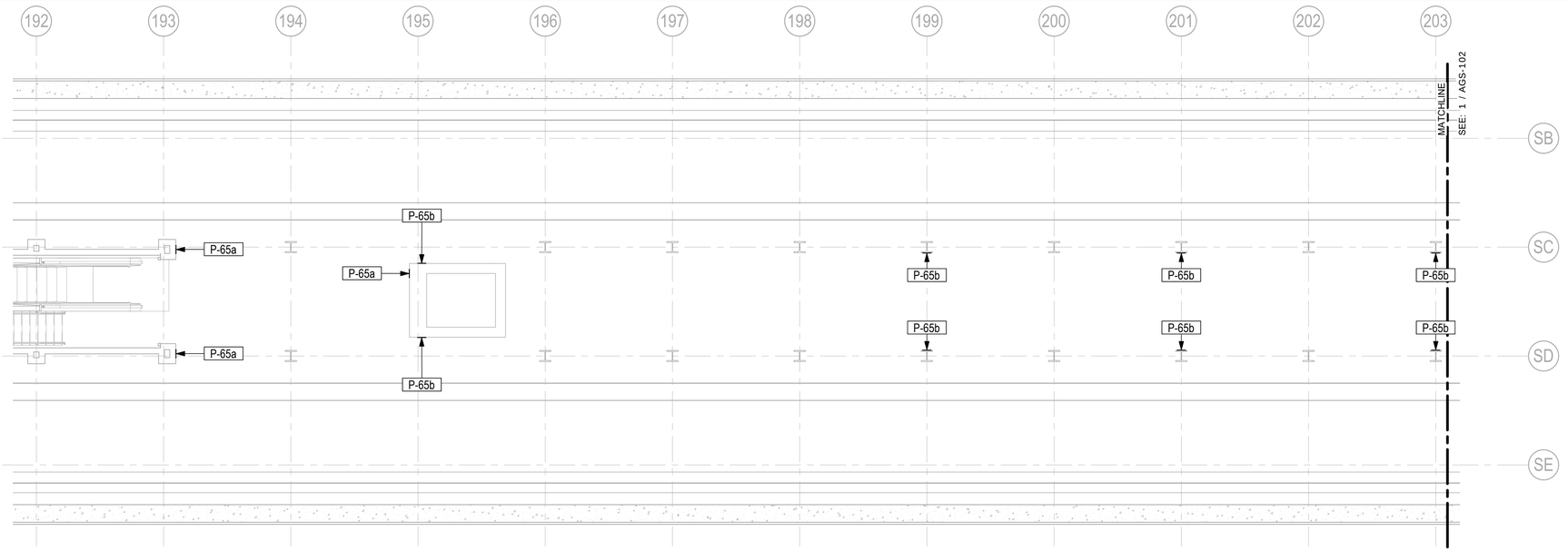

2 SUBWAY PLATFORM LEVEL SIGNAGE PLAN

1/8" = 1'-0"

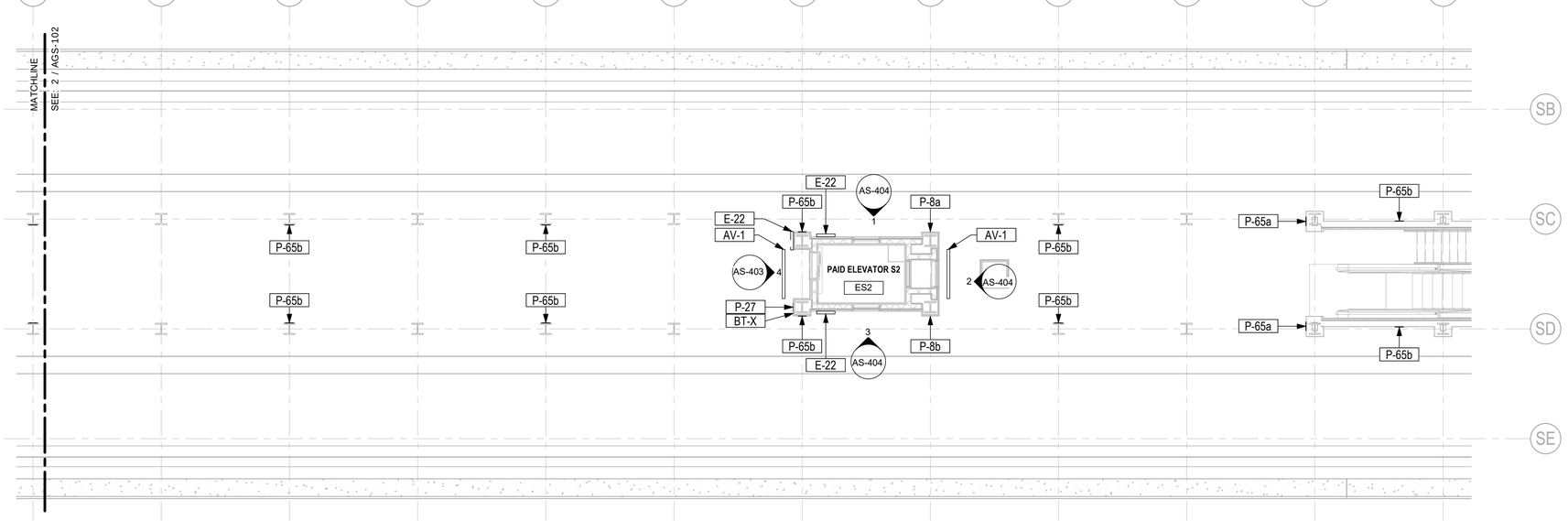

1 SUBWAY PLATFORM LEVEL SIGNAGE PLAN

1/8" = 1'-0"

DESIGN BY:									
DRAWN BY:									
CHECKED BY:									
APPROVED BY:		4	7/3/2023	ISSUED FOR BID	KP	KP	NL		
CDOT/APPROVED BY:		NO.	DATE	REVISIONS	DES.	DRW.	CHK.	DCCO	CDOT

TRANSYSTEMS
222 SOUTH RIVERSIDE PLAZA SUITE 610
CHICAGO, ILLINOIS 60606

LICENSED ARCHITECT
QUENTIN PETERSEN
001.024068
STATE OF ILLINOIS

CDOT
CHICAGO DEPARTMENT OF TRANSPORTATION
DIVISION OF ENGINEERING

STATE / LAKE LOOP ELEVATED STATION
200 NORTH STATE STREET, CHICAGO, IL 60601

SUBWAY SIGNAGE PLAN

CDOT PROJECT D-1-209

DATE: 9/9/2022

SPEC. NO.

DRAWING NO.
AGS-102

REVISION NO.4

SIGNAGE SCHEDULE - NON-ILLUMINATED										
SIGN TYPES	DESIGN NUMBER	INSTALLATION LOCATION	SIGN MESSAGE	GRAPHIC COLOR	BACKGROUND COLOR	DRILLING PATTERN	OVERALL SIGN SIZE	SIGN MATERIAL	SIGN QUANTITY	NOTES
P-8a	OP	PLATFORM COLUMNS	[STATION 1ST LETTER] [STATION NAME] [95TH/DAN RYAN]	GRAY, WHITE/LINE COLORS	PMS 425, 186, WHITE	C	12" X 18"	PORCELAIN	1	
P-8b	OP	PLATFORM COLUMNS	[STATION 1ST LETTER] [STATION NAME] [HOWARD]	GRAY, WHITE/LINE COLORS	PMS 425, 186, WHITE	C	12" X 18"	PORCELAIN	1	
P-11	SDP-1216-R1	MEZZANINE	AUTHORIZED PERSONNEL ONLY	WHITE	BLACK	VHB TAPE	12"x4"	FIBERGLASS	2	
P-27	OP-2669	ELEVATOR	ADA ELEVATOR	WHITE	PMS 300	C	12" x 18"	PORCELAIN	4	
P-62	OP	MEZZANINE	OUT TO STREET AND BUSES	WHITE	BLACK	CA	72" X 12"	PORCELAIN	2	
P-65a	OP	PLATFORM	VARIES	GRAY, WHITE/LINE COLORS	BLACK	L	12"X28"	PORCELAIN	5	EXISTING SIGNS TO BE UPDATED WITH NEW PLATFORM ELEVATOR INFORMATION
P-65b	OP	PLATFORM	VARIES	GRAY, WHITE/LINE COLORS	BLACK	LA	12" X 36"	PORCELAIN	18	EXISTING SIGNS TO BE UPDATED WITH NEW PLATFORM ELEVATOR INFORMATION
P-EGRESS		ELEVATOR	[EGRESS DIAGRAM]	BLACK	WHITE	C	12" x 18"	PORCELAIN	1	

SIGNAGE SCHEDULE - ILLUMINATED										
SIGN TYPES	DESIGN NUMBER	INSTALLATION LOCATION	SIGN MESSAGE	GRAPHIC COLOR	BACKGROUND COLOR	DRILLING PATTERN	OVERALL SIGN SIZE	SIGN MATERIAL	SIGN QUANTITY	NOTES
AV-1	OP	LIGHT TRAY	VARIES / AUDIO VISUAL ELECTRONIC CHASING MESSAGE	-	BLACK	-	68"X9"	ELECTRONIC DISPLAY	2	AUDIO VISUAL ELECTRONIC CHASING MESSAGE
E7-4a	OP	MEZZANINE CEILING / BUILT INTO SOFFIT	ELEVATOR ↑	WHITE	PMS 300	SIGN BOX	49 1/2"X8"	FIBERGLASS	2	TWO-SIDED
E7-4b	OP	MEZZANINE CEILING / BUILT INTO SOFFIT	OUT ↑	WHITE	BLACK	SIGN BOX	49 1/2"X8"	FIBERGLASS	2	TWO-SIDED
E7-4c	OP	MEZZANINE CEILING / BUILT INTO SOFFIT	TRAINS ↓	WHITE	BLACK	SIGN BOX	49 1/2"X8"	FIBERGLASS	1	
E7-4d	OP	MEZZANINE	ELEVATOR TO STREET	WHITE	PMS 300	SIGN BOX	49 1/2"X8"	FIBERGLASS	1	
E-22	OP	PLATFORM	VARIES	WHITE	PMS 300	SIGN BOX	15" X 25.5"	FIBERGLASS	3	
E-K1	OP	STREET LEVEL ELEVATOR	SUBWAY / RED LINE	BLACK, RED PMS 200		SIGN BOX		-	1	
EXIT	ELEC.	MEZZANINE CEILING	EXIT	RED	WHITE	SIGN BOX	12"x8"	FIBERGLASS	2	

SIGNAGE SCHEDULE - BRAILLE									
SIGN TYPES	DESIGN NUMBER	INSTALLATION LOCATION	SIGN MESSAGE	GRAPHIC COLOR	BACKGROUND COLOR	DRILLING PATTERN	OVERALL SIGN SIZE	SIGN MATERIAL	SIGN QUANTITY	NOTES
BT-X		VARIES	VARIES	EGGSHELL WHITE	PMS 425	ACCORDING TO ARTWORK	4"X17"	ZINC ETCHED	12	

NOTES:

1. ALL SIGNS TO BE APPROVED BY CDOT IN A SUBMITTAL BEFORE FABRICATION, CDOT WILL APPROVE ALL ARTWORK.
2. ALL SIGNS TO BE FIELD VERIFIED AND LOCATED WITH CDOT BEFORE INSTALLATION
3. ETCHED ZINC SIGNS TO BE MADE OF 0.125" THICK ZINC.
4. ALL BRAILLE SIGNS TO BE 5/8" MINIMUM.
5. ALL SIGNAGE SUPPORTS TO BE STAINLESS STEEL.
6. ALL CONDUITS TO BE CONCEALED.
7. PROVIDE IDENTIFICATION SIGNS FOR ALL DOORS. COORDINATE WITH CDOT.

NOTES:
1. ALL HOLES TO BE 5/16" Ø
2. BREAK ALL SHARP EDGES

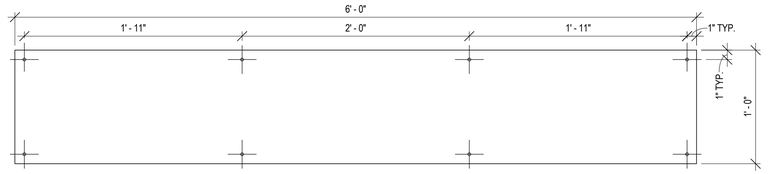

TYPE 'CA'

5/16" DIAMETER MOUNTING HOLES TYP. SEE CTA DESIGN CRITERIA FOR MOUNTING SPECIFICATIONS.

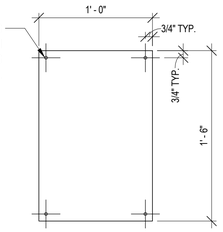

TYPE 'C'

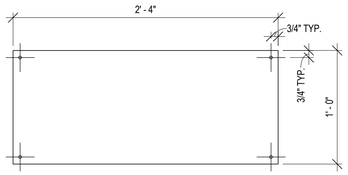

TYPE 'L'

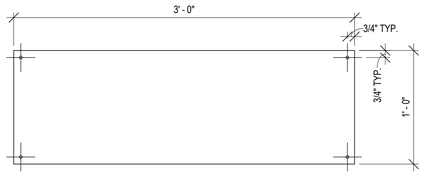

TYPE 'LA'

2 NON-ILLUMINATED SIGNAGE DRILLING PATTERNS
1 1/2" = 1'-0"

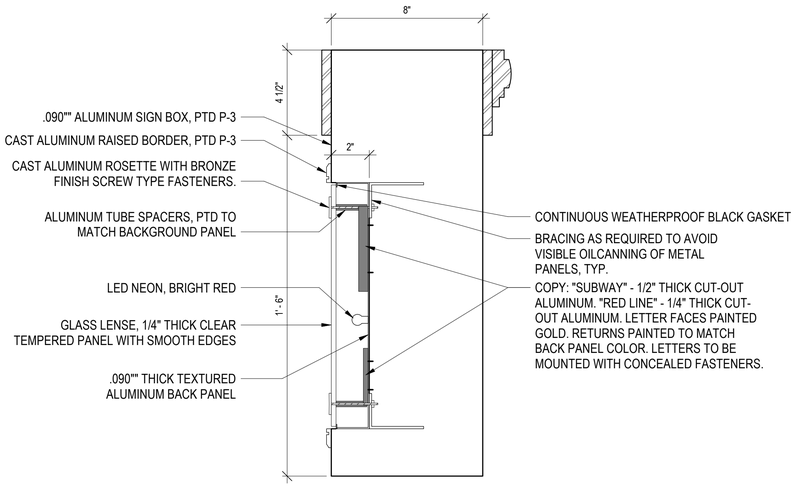

1 E-K1 SECTION
3" = 1'-0"

DESIGN BY:										
DRAWN BY:										
CHECKED BY:										
APPROVED BY:		4	7/3/2023	ISSUED FOR BID	KP	KP	NL			
CDOT/APPROVED BY:		NO.	DATE	REVISIONS	DES.	DRW.	CHK.	DCCO	CDOT	

TranSystems
TRANSYSTEMS
222 SOUTH RIVERSIDE PLAZA SUITE 610
CHICAGO, ILLINOIS 60606

LICENSED ARCHITECT
QUENTIN PETERSEN
001.024068
STATE OF ILLINOIS

CDOT
CHICAGO DEPARTMENT OF TRANSPORTATION
DIVISION OF ENGINEERING

STATE / LAKE LOOP ELEVATED STATION
200 NORTH STATE STREET, CHICAGO, IL 60601

SUBWAY SIGNAGE SCHEDULE

CDOT PROJECT D-1-209

DATE: 9/9/2022

SPEC. NO.

DRAWING NO. AGS-103

REVISION NO.4

SYMBOLS LIST

SYMBOL	DESCRIPTION	SYMBOL	DESCRIPTION
	ELBOW DOWN		ANGLE GATE VALVE
	ELBOW UP		GLOBE VALVE
	TEE DN		ANGLE GLOBE VALVE
	TEE UP		OS&Y WITH TAMPER SWITCH
	FIXTURE TRAP		FLOW ARROW
	CHECK VALVE		PUMP
	DELUGE VALVE		MIXING VALVE
	OS&Y VALVE		WALL SLEEVE
	ALARM CHECK VALVE		UNION
	DETECTOR CHECK VALVE WITH BY-PASS METER		PIPE CAP
	FIRE DEPARTMENT VALVE		CLEANOUT (CO)
FEC-R/S	FIRE EXTINGUISHER RECESSED OR SURFACE		WALL/PIPE CLEAN OUT (WCO)
NS	NON SPRINKLED AREA		NEW CONNECTION
	SIAMESE FIRE DEPT. CONNECTION		STRAINER
	FIRE ALARM BELL		THERMOMETER (TH)
	WALL FIRE PUMP TEST HEADER		PRESSURE GAUGE WITH BALL VALVE
	DRY PIPE VALVE	BF	INLINE BACK FLOW PREVENTOR
FS	FLOW SWITCH		BALL VALVE / ISOLATION VALVE (FULL PORT)
TS	TAMPER SWITCH		BALANCING COCK
	FLOOR CLEAN OUT		BALANCING VALVE (ASSEMBLY)
	HOSE BIB, EXTERIOR WITH BOX & KEY		HOSE BIB, SPECIAL USE
	HOSE BIB, EXTERIOR		HOSE BIB (HB-X)

PIPE SYMBOLS

UNDERGROUND LINE STYLES	DESCRIPTION
	SANITARY, OR WASTE PIPE
	STORM SEWER PIPE
UCW	DOMESTIC COLD WATER
	SANITARY VENT PIPE
	DRAIN TILE

ABOVEGROUND LINE STYLES	DESCRIPTION
	DOMESTIC COLD WATER PIPE
	DOMESTIC HOT WATER PIPE
	DOMESTIC HOT WATER RECIRC. PIPE
	SANITARY, SOIL OR WASTE PIPE
	STORM SEWER PIPE
	SANITARY VENT PIPE

DEMOLITION PIPE SYMBOLS

DEMOLITION LINE STYLES	DESCRIPTION
	GENERAL

SYSTEMS ABBREVIATIONS

CW	DOMESTIC COLD WATER
HW	DOMESTIC HOT WATER
HWR	DOMESTIC HOT WATER RETURN
SAN/S	SANITARY/SOIL
W	WASTE
DS	DOWNSPOUT
V	SANITARY VENT
WCO	WALL CLEAN OUT
FCO	FLOOR CLENOUT
CO	CLEANOUT
EWH	ELECTRIC WATER HEATER
FD	FLOOR DRAIN
AD	AREA DRAIN
ST	STORM
EWH	ELECTRIC WATER HEATER
WC	WATERCLOSET
LAV	LAVITORY
MB	MOP BASIN
HB	HOSE BIB
S.S.	STAINLESS STEEL
VIF	VERIFY IN FIELD
PD	PUMP DISCHARGE
P-SL	PIPE SLEEVE
PS / X	PLUMBING STACK W/NUMBER
WR / X	WATER RISER W/NUMBER
SP / X	SUMP PUMP W/NUMBER
OSD	OPEN SIDE DRAIN
HD	HUB DRAIN
DBP	DOMESTIC BOOSTER PUMP
TMV	THERMOSTATIC MIXING VALVE
RD	ROOF DRAIN
TD	TRENCH DRAIN
PG	PRESSURE GAUGE
BOP	BOTTOM OF PIPE

PLUMBING PIPING MATERIALS SCHEDULE

PIPING DIAGRAM	TYPE PIPING	JOINT TYPE	FITTING TYPE	REMARKS
UNDER GROUND SANITARY WASTE AND VENT SIZE: 3" AND LARGER	EXTRA HEAVY CAST IRON SOIL PIPE (ASTM A-74,888,C15P1-301)	HUB & SPIGOT W/NEOPRENE GASKET JOINTS PRESS-ON	HUB & SPIGOT EXTRA HEAVY CAST IRON DRAINAGE TYPE (AWWA C110/A21.10)	
ABOVE GROUND/SUSPENDED SANITARY WASTE AND VENT SIZE: 3" AND LARGER	SERVICE CLASS CAST IRON SOIL PIPE	HUB & SPIGOT LEAD AND OAKUM CAULKED JOINTS	HUB & SPIGOT SERVICE WEIGHT CAST IRON DRAINAGE TYPE (ASTM B16.4, ASTM B16.12, ASTM A74, ASTM A 888, C15P1301)	
ABOVE GROUND/SUSPENDED SANITARY WASTE AND VENT SIZE: 2 1/2" AND LESS	COPPER TYPE DWV TUBE (ASTM B75,88,251,306)	SOLDERED TYPE	COPPER DRAINAGE TYPE FITTINGS CAST OR WROUGHT (ASTM B16.15,18,22,23,26,29)	
UNDERGROUND STORM PIPING SIZE: 4" AND LARGER	EXTRA HEAVY CAST IRON SOIL PIPE (ASTM A-74,888,C15P1-301)	HUB & SPIGOT W/NEOPRENE GASKET JOINTS PRESS-ON	HUB & SPIGOT EXTRA HEAVY CAST IRON DRAINAGE TYPE	
ABOVE GROUND/SUSPENDED STORM PIPING SIZE: 3" AND LARGER	SERVICE CLASS CAST IRON SOIL PIPE	HUB & SPIGOT LEAD AND OAKUM CAULKED JOINTS	HUB & SPIGOT SERVICE WEIGHT CAST IRON DRAINAGE TYPE	
UNDERGROUND DOMESTIC COLD WATER SIZE: 3" AND LARGER	DUCTILE CAST IRON PIPE CLASS 2 TO 6 AS REQUIRED (CEMENT LINED)	MECHANICAL JOINT OR PUSH-ON TYPE JOINT WITH RUBBER GASKET	COMPOTIBLE DUCTILE IRON (AWWA C110, AWWA C153)	
UNDERGROUND DOMESTIC COLD WATER SIZE: 2" AND SMALLER	COPPER OR COPPER ALLOY TUBING (TYPE K,L)(ASTM B75, B88, B251, B447)	BRAZED JOINTS	WROT AND CAST PRESSURE PIPE FITTINGS (ASSE 1061, ASME B16.15,18,22,23,26,29)	
ABOVE GROUND/SUSPENDED DOMESTIC COLD WATER SIZE: 4" AND SMALLER	COPPER OR COPPER ALLOY TUBING (TYPE K,L)	SOLDERED JOINTS 95-5, TIN-ANTIMONY (ANSI/ASTM B32) ALLOY GRADE 95TA	WROT AND CAST PRESSURE PIPE SOCKET FITTINGS	
ABOVE GROUND/SUSPENDED DOMESTIC HOT WATER SIZE: 1/2" AND LARGER	COPPER OR COPPER ALLOY TUBING (TYPE K,L)	SOLDERED JOINTS 95-5, TIN-ANTIMONY (ANSI/ASTM B32) ALLOY GRADE 95TA	WROT AND CAST PRESSURE PIPE SOCKET FITTINGS	
ABOVE GROUND SUMP PUMP DISCHARGE SIZE: 1 1/4" AND LARGER	COPPER OR COPPER ALLOY TUBING (TYPE K,L)	BRAZED JOINTS	COPPER DRAINAGE TYPE FITTINGS CAST OR WROUGHT	

NOTE:

ALL SYMBOLS AND ABBREVIATIONS LISTED MAY NOT BE APPLICABLE TO PROJECT REQUIREMENTS.

GENERAL PLUMBING NOTES:

1. ALL PLUMBING SHALL BE INSTALLED IN ACCORDANCE WITH THE ILLINOIS PLUMBING CODE, THE LATEST EDITION OF THE CHICAGO BUILDING CODE, THE LATEST EDITION OF THE CITY OF CHICAGO PLUMBING CODE (NFPA NO. 13) AND ALL RELATIVE AMENDMENTS.
2. CONTRACTOR SHALL PAY FOR ALL PERMITS AND INSPECTION FEES AS REQUIRED FOR THIS WORK.
3. CONTRACTOR SHALL VISIT THE SITE TO VERIFY THE FULL EXTENT OF THE WORK AND THE EXACT LOCATION, ELEVATION, ETC, OF PIPING. COORDINATE ALL WORK WITH THE RESPECTIVE TRADES.
4. CONTRACTOR SHALL PROVIDE ALL REQUIRED CUTTING, DRILLING AND PATCHING. NO STRUCTURAL WORK TO BE CUT WITHOUT PREVIOUS APPROVAL OF THE ARCHITECT. PATCH ALL DISTURBED WALLS, CEILINGS AND FLOORS TO MATCH ADJACENT SURFACES AS NECESSARY.
5. DRAWINGS ARE GENERALLY DIAGRAMMATIC. ROUTING OF PIPING, DUCTWORK, CONDUITS, RACEWAYS, ETC. AS SHOWN ON THE DRAWINGS DOES NOT INTEND TO SHOW EVERY RISE, DROP, OFFSET, FITTING NOR EVERY STRUCTURAL ELEMENT THAT MAY BE ENCOUNTERED DURING THE INSTALLATION OF THIS WORK. PLUMBING.
6. CONTRACTOR SHALL MAKE ANY REQUIRED CHANGES FROM THE GENERAL ROUTING SHOWN ON THESE DRAWINGS, SUCH AS OFFSETS, BENDS, OR CHANGES IN ELEVATION DUE TO COORDINATION WITH THE WORK OF OTHER TRADES AND BUILDING.
7. CONSTRUCTION. ALL CHANGES SHALL BE MADE WITHOUT ADDITIONAL COST TO THE OWNER OR DELAY IN THE COMPLETION DATE OF THE PROJECT.
8. COORDINATE & VERIFY WITH GENERAL CONTRACTOR AND RELATED DISCIPLINES, PRIOR TO START OF ANY WORK, ALL WORK TO BE PERFORMED INSIDE OF THE 5'-0" BUILDING PERIMETER LIMITS OF CONSTRUCTION AND COORDINATED WITH OTHER TRADES TO MATCH WORK OUTSIDE.
9. ALL PIPING PASSING THRU FLOORS, WALLS, CEILINGS OR ROOF SHALL HAVE A DUCTILE IRON PIPE SLEEVE INSTALLED AROUND THE PIPE AND/OR INSULATION.
10. SLEEVES THROUGH FOUNDATION WALLS SHALL BE AT LEAST 2 PIPE SIZES LARGER THAN THE SERVICE PIPE. PROVIDE AN ESCUTCHEON PLATE AROUND PENETRATIONS EXPOSED TO VIEW. ESCUTCHEON PLATES SHALL BE LARGE ENOUGH TO COVER THE ENTIRE HOLE. ALL PENETRATIONS SHALL BE SEALED TO MAINTAIN THE WALL/FLOOR/ROOF FIRE & INSULATION RATINGS.
11. ALL FLOOR MOUNTED EQUIPMENT NOT PROVIDED ON A SKID IS TO BE INSTALLED ON 4" THICK CONCRETE HOUSEKEEPING PAD.
12. REFER TO ARCHITECTURAL AND STRUCTURAL DRAWINGS FOR FINISHED CEILING HEIGHTS AND LOCATION OF WALL, ROOF AND FLOOR OPENINGS.
13. PROVIDE HANGERS AND SUPPLEMENTAL SUPPORT STEEL FOR ALL EQUIPMENT AND PIPING. ALL WATER SUPPLY PIPING SHALL BE SUSPENDED WITH CLEVIS AND / OR TRAPEZE PIPE HANGERS WITH PIPE COVERING PROTECTION SADDLES OR SHEET METAL INSULATION SHIELDS.
14. THE HOT WATER SUPPLY FOR EACH LAVATORY AND SINK IS TO BE INSULATED. THE P-TRAP AND WASTE DRAIN PIPE FOR EACH ADA ACCESSIBLE LAVATORY AND SINK IS TO BE INSULATED.
15. CONTRACTOR SHALL VISIT THE SITE AND VERIFY EXISTING CONDITIONS PRIOR TO SUBMITTING BID OR DOING ANY WORK. CONTRACTOR SHALL NOTIFY ARCHITECT / ENGINEER OF ANY DISCREPANCIES BETWEEN PLANS AND ACTUAL CONDITIONS.
16. PROVIDE ACCESS TO ALL VALVES AND SYSTEM COMPONENTS REQUIRING ACCESS. ALL PIPING ACCESSORIES AND EQUIPMENT IN MECHANICAL ROOMS SUCH AS ISOLATION VALVES, RECIRCULATION PUMPS, ETC. SHALL BE INSTALLED AT A REASONABLE HEIGHT IN ORDER TO FACILITATE MAINTENANCE.
17. EXCEPT FOR PIPING ASSOCIATED WITH THE SUMP PUMPS, PLUMBING PIPING SHALL NOT BE ROUTED THROUGH OR OVER ANY ELEVATOR SHAFTS, ELEVATOR EQUIPMENT AREAS, ELECTRICAL ROOMS / EQUIPMENT AREAS OR COMMUNICATIONS AREAS.
18. PLUMBING CONTRACTOR TO GIVE ALL LOCATIONS AND DIMENSIONS OF ALL REQUIRED ACCESS PANELS TO THE GENERAL CONTRACTOR. GENERAL CONTRACTOR WILL SUBMIT TO THE ARCHITECT / ENGINEER FOR APPROVAL ALL FINISH REQUIREMENTS PRIOR TO INSTALLATION.
19. TRENCHING, EXCAVATION AND BACKFILL OPERATIONS SHALL BE IN ACCORDANCE WITH ARTICLE 3, SECTION 306 OF THE CHICAGO BUILDING CODE.
20. IN ANY CASE WHERE NEW EQUIPMENT IS INSTALLED AND HAS TO BE CONNECTED TO EXISTING SYSTEMS, THE CONTRACTOR SHALL VERIFY THE CAPACITIES AT THE INDICATED POINT OF CONNECTION. SHOULD THE EXISTING CONDITION REQUIRE THE NEW BRANCH TO BE ROUTED TO ANOTHER LOCATION, THE CONTRACTOR SHALL PERFORM THIS WORK AS PART OF HIS CONTRACT.
21. WATER PRESSURE AND SUPPLY INFORMATION: FIELD VERIFY ALL PRESSURES AND CAPACITIES. CONTRACTOR SHALL BE RESPONSIBLE FOR FLOW TEST INFORMATION. CONTRACTOR SHALL VERIFY FIRE PUMP SIZE UPON COMPLETION OF FLOW TEST.
22. ALL PIPING, VALVES AND DEVICES SHALL BE INSTALLED SO AS NOT TO OBSTRUCT ANY PORTION OF A WINDOW, DOORWAY, STAIRWAY OR PASSAGEWAY OR ANY PIECE OF MECHANICAL OR ELECTRICAL EQUIPMENT.
23. FACTORY MUTUAL RESEARCH CORPORATION APPROVED EQUIPMENT SHALL BE PROVIDED WHERE APPLICABLE AND DETAILS OF THE INSTALLATIONS SHALL CONFORM TO FACTORY MUTUAL'S RECOMMENDED PRACTICES REFER TO SPECIFICATIONS FOR COMPLIANCE REQUIREMENTS.
24. DO NOT INSTALL PIPING OR SPRINKLER HEADS IN HIGH VOLTAGE (OVER 480 V) ELECTRICAL CLOSETS, TRANSFORMER ROOMS, OR ELEVATOR EQUIPMENT ROOMS. THESE AREAS SHALL HAVE HEAT DETECTORS FURNISHED AND INSTALLED BY ELECTRIC CONTRACTOR.
25. ALL FLOOR CONTROL VALVE ASSEMBLIES ARE TO BE LOCATED WITHIN THE STAIR ENCLOSURE. CONTROL VALVES ARE TO BE SUPERVISED AND LOCKED IN THE OPEN POSITION.
26. PIPES, DUCTS, CONDUITS AND ELECTRICAL CABLE TRAYS WHICH PASS THROUGH EXISTING AND NEW FIRE-RESISTIVE BARRIERS, INCLUDING FLOOR SLABS AND WALLS, SHALL BE FIRE SEALED TO MAINTAIN THE INTEGRITY OF THE FIRE RESISTIVE BARRIER. ALL EXPOSED PIPES PASSING THROUGH A WALL, CEILING OR FLOOR SHALL HAVE CHROME ESCUTCHEON PLATES.

DOMESTIC WATER

1. ALL WATER SUPPLIED TO EQUIPMENT BY OTHER TRADES SHALL HAVE AN ISOLATION VALVE AND AN APPROVED BACKFLOW PREVENTER WHICH SHALL BE SUPPLIED AND INSTALLED BY PLUMBING CONTRACTOR.
2. ALL DOMESTIC WATER SUPPLIES TO FIXTURES AND EQUIPMENT SHALL HAVE AIR CHAMBERS.
3. ALL WATER SUPPLY AND RETURN PIPING SHALL BE INSULATED, INCLUDING ALL PIPING ABOVE CEILINGS, IN PIPE CHASES, AND IN WALLS. REFER TO SPECIFICATIONS FOR TYPE AND THICKNESS OF INSULATION. PROVIDE VALVE HANDLE EXTENSIONS ON ALL INSULATED PIPING.
4. ALL HOT WATER SUPPLY PIPING SHALL BE INSTALLED TO COMPENSATE FOR EXPANSION OFT THE PIPE BY INSTALLING PIPE ANCHORS, GUIDES, EXPANSION JOINTS, PIPE OFFSETS, OR LOOPS. EXPANSION JOINTS ARE TO ACCOMMODATE THREE AXIS OF MOVEMENT.
5. ALL INTERIOR AND EXTERIOR HOSE BIBS / WALL HYDRANTS SHALL RECEIVE THE WATER SUPPLY DOWNSTREAM OF A STRAINER AND DOUBLE CHECK VALVE TYPE BACKFLOW PREVENTER INSTALLED INSIDE THE BUILDING AT NO MORE THAN 48" ABOVE THE FLOOR AND ACCESSIBLE TO MAINTENANCE.
6. MOP SINKS ONLY WITH HOSE THREADED FAUCETS SHALL HAVE A VACUUM BREAKER ON THE SUPPLY AFTER THE VALVE, LOCATED 7'-6" ABOVE FINISHED FLOOR.
7. EACH GROUP OF FIXTURES SUPPLIED WITH A BRANCH FROM THE MAIN SHALL HAVE AN ISOLATION VALVE NEAR THE POINT OF CONNECTION TO THE MAIN. ALL EQUIPMENT SUPPLIED BY COLD AND / OR HOT WATER SHALL HAVE AN ISOLATION VALVE ON THE WATER SUPPLY.
8. PITCH ALL SUPPLY AND RETURN LINES TO DRAIN COMPLETELY THROUGH LOWER EQUIPMENT, FIXTURES, UNIONS, AND DRAIN VALVES.
9. INSTALL A 1/2" DRAIN VALVE WITH 3/4"HOSE THREAD AND VACUUM BREAKER OUTLET IN ALL MAIN PIPING RUNS WHICH WOULD NOT BE ABLE TO DRAIN THRU A LOWER PIECE OF EQUIPMENT.
10. ALL WATER DISTRIBUTION SYSTEMS, POTABLE AND NONPOTABLE, SHALL BE IDENTIFIED BY COLOR MARKING OR METAL TAGS AS REQUIRED BY ASME A13.1.
11. COPPER PIPE ABOVE GROUND SHALL BE (TYPE L) MINIMUM, SWEAT WITH WROUGHT FITTINGS.
12. PROVIDE UNIONS AND/OR FLANGES TO DISCONNECT ALL PERTINENT EQUIPMENT INCLUDING BUT NOT LIMITED TO PUMPS, WATER HEATERS, TANKS, FILTERS AND VALVE TRAINS.

SANITARY, STORM & VENT

1. ALL SANITARY AND STORM PIPING SHALL SLOPE AT 1/4" PER FOOT FOR 2-1/2" AND SMALLER, AT 1/8" PER FOOT FOR 3" TO 6", AND 1/16" FOR 8" AND LARGER PIPING UNLESS INDICATED OTHERWISE ON THE DRAWINGS.
2. ALL HORIZONTAL DRAINS SHALL BE PROVIDED WITH CLEANOUTS LOCATED NO MORE THAN 100 FEET APART, EXCEPT THAT THE MAXIMUM SHALL BE 40 FEET FOR DRAINS 4" OR LESS 150 FEET FOR DRAINS 10" OR LARGER.
3. ALL SOIL STACKS SHALL RUN FULL SIZE THROUGH THE ROOF.
4. THE DIAMETER OF ALL VENTS SHALL BE AT LEAST ONE-HALF THE DIAMETER OF THE DRAIN LINE SERVED BUT NOT LESS THAN 1-1/2".
5. CATCH BASINS AND MANHOLES ARE THE RESPONSIBILITY OF THE SITE CONTRACTOR.
6. IN AREAS SUCH AS MECHANICAL / ELECTRICAL ROOMS, WHERE A TRAP SEAL IS SUBJECT TO LOSS BY EVAPORATION, PROVIDE A DEEP SEAL TRAP (CONSISTING OF A 4-INCH SEAL), A TRAP FILLED WITH MINERAL OIL, OR A TRAP PRIMER PER MANUFACTURERS REQUIREMENTS

INSULATION AND HEAT TRACING

1. DOMESTIC HOT & COLD WATER-SUSPENDED PIPING: HEAVY DENSITY, FIBERGLASS PIPE INSULATION 2" THICK, WITH FLAME RETARDANT VAPOR BARRIER JACKET. ALL SUPPLY PIPING SHALL BE INSULATED.
2. STORM DRAIN - SUSPENDED PIPING: HEAVY DENSITY, FIBERGLASS PIPE INSULATION 1" THICK, WITH FLAME RETARDANT VAPOR BARRIER JACKET, INSULATE ALL INTERIOR HORIZONTAL & VERTICAL LEADERS FROM ROOF DRAINS, AS WELL AS ROOF DRAIN BODY, TO PREVENT CONDENSATION.
3. ALL PIPING OUTSIDE SHOULD BE HEAT TRACED. PROVIDE METAL REMOVABLE JACKETS. REFER TO DIVISION 22 SPECIFICATIONS.

MATERIALS

1. UNDERGROUND STORM, DRAINAGE AND VENT PIPE SHALL BE: CAST-IRON PIPE, HUB SPIGOT: ASTM A-74; ASTM A-888; CISPI.301
2. ABOVE-GROUND STORM, DRAINAGE AND VENT PIPE SHALL BE: CAST-IRON PIPE, HUB & SPIGOT: ASTM A-74; CISPI 301; ASTM A888 COPPER OR COPPER-ALLOY PIPE: ASTM B-42; ASTM B-302 COPPER OR COPPER-ALLOY TUBING (TYPE K OR L): ASTM 75; ASTM B-88; ASTM B-251; ASTM B-306 GALVANIZED STEEL PIPE: ASTM A-53
3. UNDERGROUND WATER SERVICE PIPE SHALL BE: COPPER OR COPPER - ALLOY TUBING (TYPE K); ASTM B-74; ASTM B-88; ASTM B-251; ASTM B-447 DUCTILE IRON WATER PIPE (CEMENT LINED); AWWA C-151; AWWA C-115
4. ABOVE - GROUND WATER DISTRIBUTION PIPE SHALL BE: ALL SIZES - COPPER OR COPPER - ALLOY TUBING (TYPE K OR L); ASTM B-74; ASTM B-88; ASTM B-251; ASTM B-4476".
5. ABOVE-GROUND SOLAR PIPE SHALL BE: ALL SIZES - BRAZED COPPER OR COPPER - ALLOY PIPING (TYPE K OR L).
6. GASKETED BELL AND SPIGOT C.I. PIPING IS RESERVED FOR UNDERGROUND USE. ABOVE GROUND SHALL BE CAULKED LEAD AND OAKUM JOINTS.

ACCESSIBILITY

1. PER ILLINOIS ACCESSIBILITY CODE, CURBS IN ACCESSIBLE SHOWER STALLS SHALL BE NO HIGHER THAN 1/2 INCH. CONTRACTOR IS RESPONSIBLE FOR PROVIDING A RECESSED FLOOR, IF REQUIRED, IN ORDER TO MEET THIS REQUIREMENT. COORDINATE FLOOR/SHOWER BASE HEIGHT WITH ARCHITECTURAL.

DESIGN BY:									
DRAWN BY:									
CHECKED BY:									
APPROVED BY:		1	7/3/2023	ISSUED FOR BID	GS	KG	MC		
CDOT/APPROVED BY:		NO.	DATE	REVISIONS	DES.	DRW.	CHK.	DCCO	CDOT

TRANSYSTEMS
222 SOUTH RIVERSIDE PLAZA SUITE 610
CHICAGO, ILLINOIS 60606

SKIDMORE, OWINGS & MERRILL LLP
224 SOUTH MICHIGAN AVENUE, SUITE 1000
CHICAGO, ILLINOIS 60604

MILHOUSE ENGINEERING & CONSTRUCTION INC
333 SOUTH WABASH AVENUE, SUITE 2901
CHICAGO, ILLINOIS 60604

EXP.: 11/30/23
062-055291
GEORGE E. BOURIS
LICENSED PROFESSIONAL ENGINEER OF ILLINOIS

CHICAGO DEPARTMENT OF TRANSPORTATION
DIVISION OF ENGINEERING

STATE / LAKE LOOP ELEVATED STATION
200 NORTH STATE STREET, CHICAGO, IL 60601

PLUMBING SYMBOLS, NOTES & ABBREVIATIONS

CDOT PROJECT D-1-209 | DATE: 9/9/2022

SPEC. NO.

DRAWING NO. P-000

REVISION NO.1

KEYED NOTES	
KEY VALUE	KEYNOTE TEXT
1	SUMP PUMP DISCHARGE, WASTE AND COLD WATER PIPING SHALL BE HEAT TRACED FROM DISCHARGE OF PUMP TO OPEN SITE DRAIN. PIPING SHALL BE INSULATED AND PROVIDED WITH REMOVABLE METAL JACKET.
2	PROVIDE SELF REGULATING HEAT TRACING CABLES IN ROOF GUTTERS AND EXTENSION INTO DOWNSPOUTS FOR CENTRAL DOME GUTTER SYSTEM INCLUDING ALL PERTINENT SYSTEM CONTROL ITEMS.

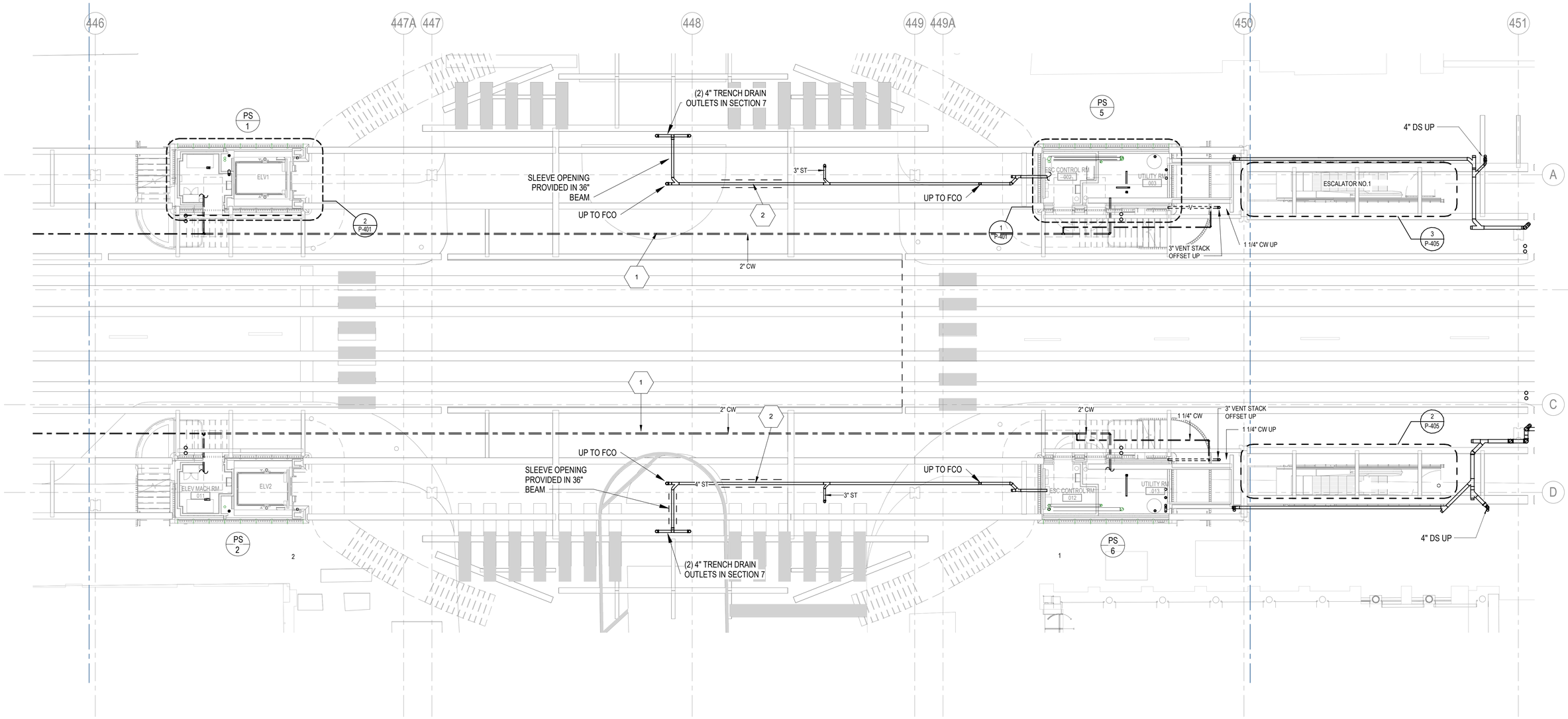

1 PLUMBING STREET LEVEL PLAN - CENTER

1/8" = 1'-0"

DESIGN BY:									
DRAWN BY:									
CHECKED BY:									
APPROVED BY:		1	7/3/2023	ISSUED FOR BID	GS	KG	MC		
CDOT/APPROVED BY:		NO.	DATE	REVISIONS	DES.	DRW.	CHK.	DCCO	CDOT

TRANSYSTEMS
222 SOUTH RIVERSIDE PLAZA SUITE 610
CHICAGO, ILLINOIS 60606

SKIDMORE, OWINGS & MERRILL LLP
224 SOUTH MICHIGAN AVENUE, SUITE 1000
CHICAGO, ILLINOIS 60604

MILHOUSE ENGINEERING & CONSTRUCTION INC
333 SOUTH WABASH AVENUE, SUITE 2901
CHICAGO, ILLINOIS 60604

EXP. 11/30/23
GEORGE E. BOURI
062-055291
LICENSED PROFESSIONAL ENGINEER OF ILLINOIS

CHICAGO DEPARTMENT OF TRANSPORTATION
DIVISION OF ENGINEERING

STATE / LAKE LOOP ELEVATED STATION
200 NORTH STATE STREET, CHICAGO, IL 60601

PLUMBING - STREET LEVEL PLAN - CENTER

CDOT PROJECT D-1-209 | DATE: 9/9/2022

SPEC. NO.

DRAWING NO. P-100

REVISION NO.1

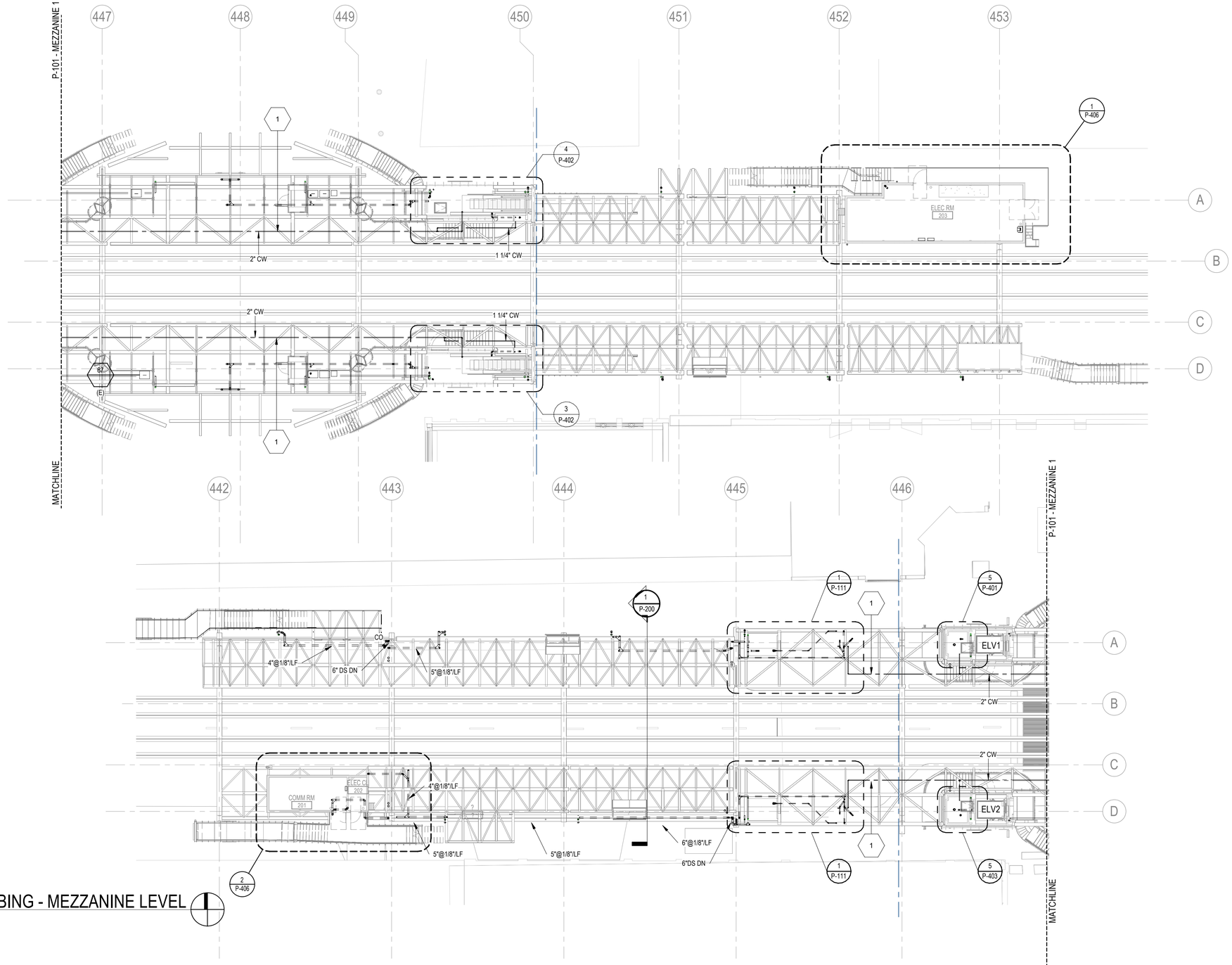

1 PLUMBING - MEZZANINE LEVEL
1/16" = 1'-0"

KEYED NOTES

KEY VALUE	KEYNOTE TEXT
1	COLDWATER PIPING SUSPENDED BELOW PLATFORM. PIPING HEAT TRACED, INSULATED AND METAL JACKET.

DESIGN BY:									
DRAWN BY:									
CHECKED BY:									
APPROVED BY:		1	7/3/2023	ISSUED FOR BID	GS	KG	MC		
CDOT/APPROVED BY:		NO.	DATE	REVISIONS	DES.	DRW.	CHK.	DCCO	CDOT

TRANSYSTEMS
222 SOUTH RIVERSIDE PLAZA SUITE 610
CHICAGO, ILLINOIS 60606

SKIDMORE, OWINGS & MERRILL LLP
224 SOUTH MICHIGAN AVENUE, SUITE 1000
CHICAGO, ILLINOIS 60604

MILHOUSE ENGINEERING & CONSTRUCTION INC
333 SOUTH WABASH AVENUE, SUITE 2901
CHICAGO, ILLINOIS 60604

EXP. 11/30/23
GEORGE E. BOURNIAS
062-055291
LICENSED PROFESSIONAL ENGINEER OF ILLINOIS

CHICAGO DEPARTMENT OF TRANSPORTATION
DIVISION OF ENGINEERING

STATE / LAKE LOOP ELEVATED STATION
200 NORTH STATE STREET, CHICAGO, IL 60601

PLUMBING - MEZZANINE LEVEL PLAN

CDOT PROJECT D-1-209

DATE: 9/9/2022

SPEC. NO.

DRAWING NO.
P-101

REVISION NO.1

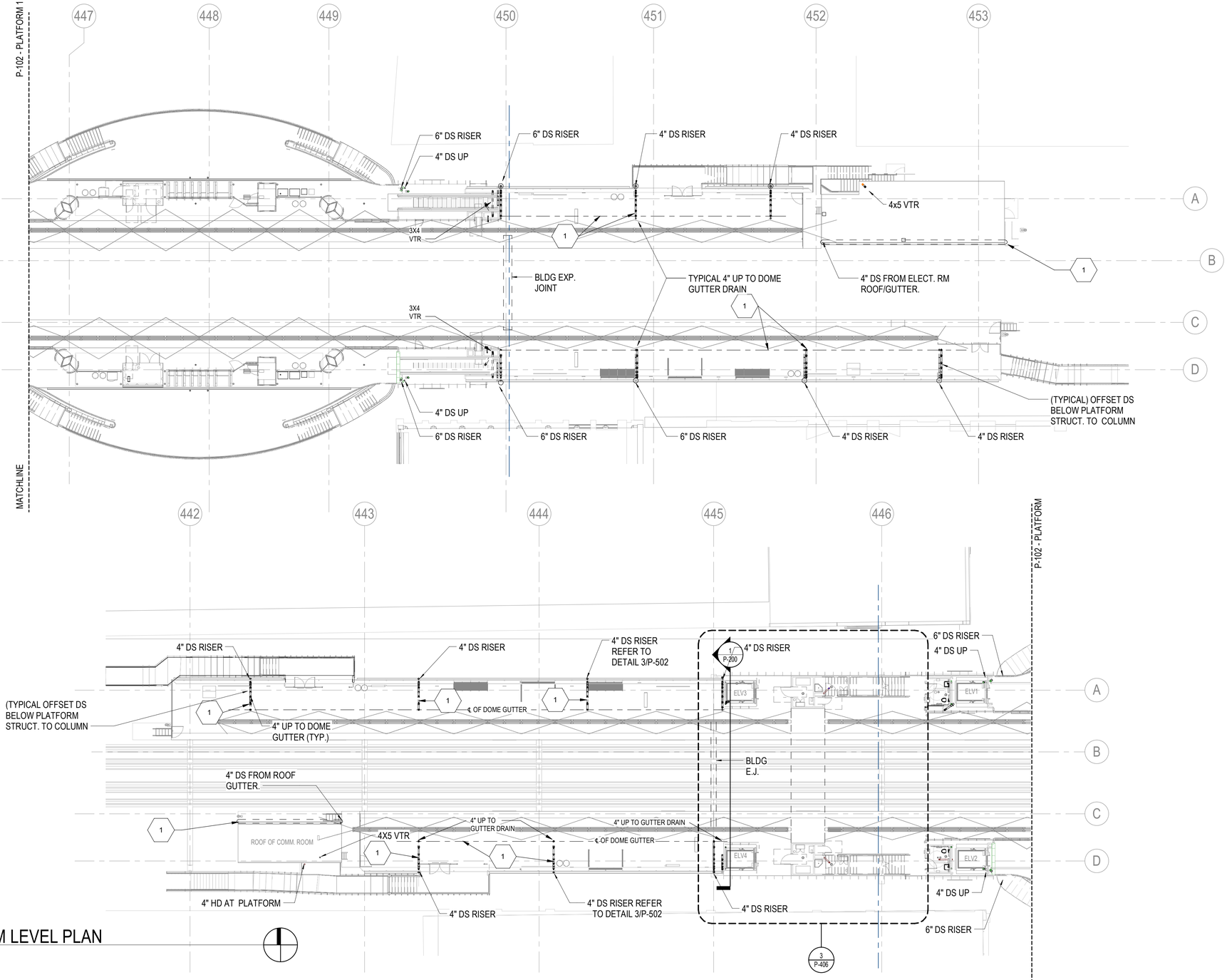

1 PLATFORM LEVEL PLAN

1/16" = 1'-0"

KEYED NOTES	
KEY VALUE	KEYNOTE TEXT
1	PROVIDE SELF REGULATING HEAT TRACING CABLES IN ROOF GUTTERS AND PERTINENT DOWN SPOUTS WITH ALL PERTINENT SYSTEM/ZONE CONTROLS.

DESIGN BY:									
DRAWN BY:									
CHECKED BY:									
APPROVED BY:		1	7/3/2023	ISSUED FOR BID	GS	KG	MC		
CDOT/APPROVED BY:		NO.	DATE	REVISIONS	DES.	DRW.	CHK.	DCCO	CDOT

TRANSYSTEMS
222 SOUTH RIVERSIDE PLAZA SUITE 610
CHICAGO, ILLINOIS 60606

SKIDMORE, OWINGS & MERRILL LLP
224 SOUTH MICHIGAN AVENUE, SUITE 1000
CHICAGO, ILLINOIS 60604

MILHOUSE ENGINEERING & CONSTRUCTION INC
333 SOUTH WABASH AVENUE, SUITE 2901
CHICAGO, ILLINOIS 60604

EXP. 11/30/23
GEORGE E. BOUTRIS
062-055291
LICENSED PROFESSIONAL ENGINEER OF ILLINOIS

CHICAGO DEPARTMENT OF TRANSPORTATION
DIVISION OF ENGINEERING

STATE / LAKE LOOP ELEVATED STATION
200 NORTH STATE STREET, CHICAGO, IL 60601

PLUMBING - PLATFORM LEVEL

CDOT PROJECT D-1-209 | DATE: 9/9/2022

SPEC. NO.

DRAWING NO. P-102

REVISION NO.1

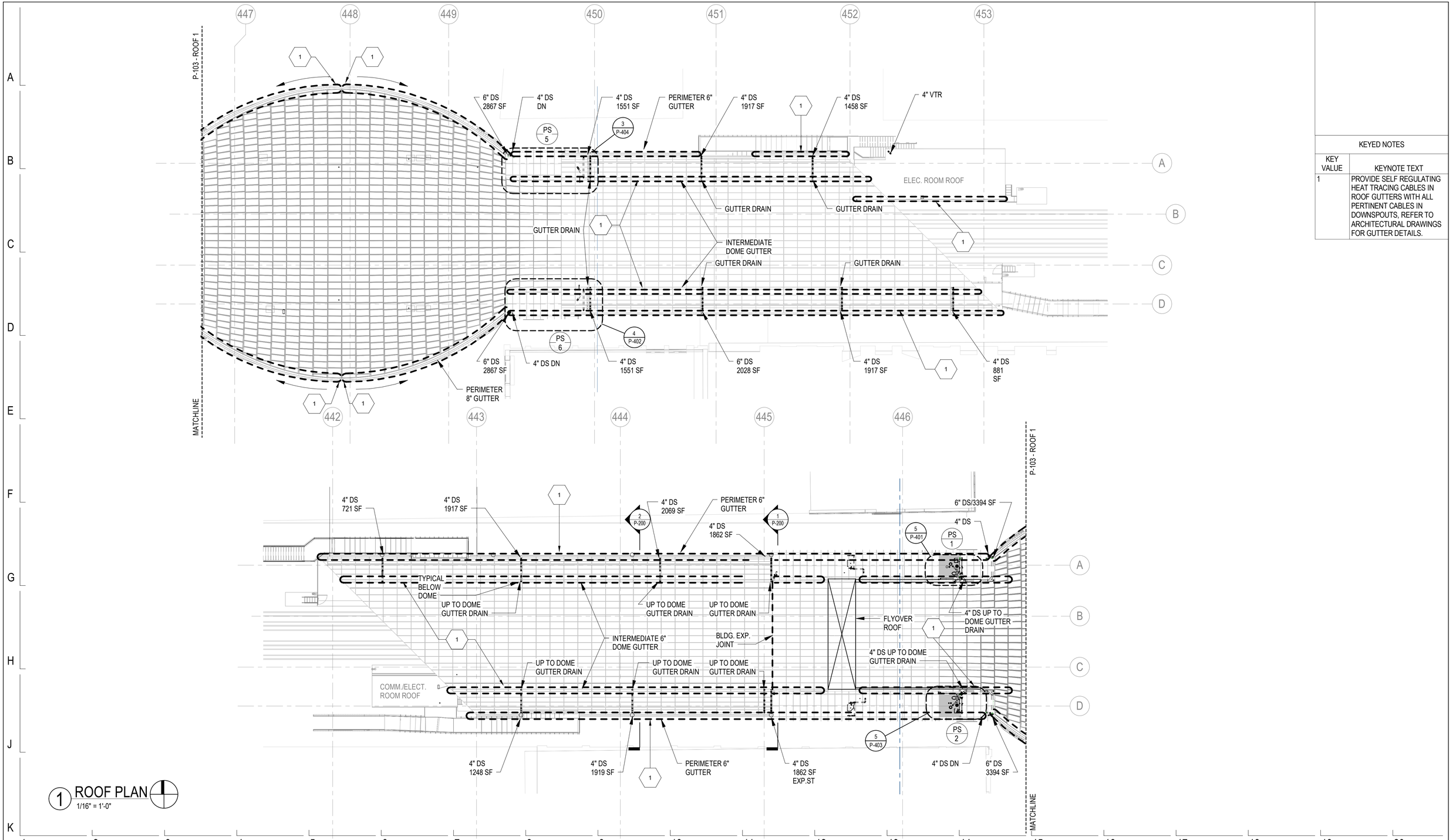

1 ROOF PLAN
1/16" = 1'-0"

KEYED NOTES	
KEY VALUE	KEYNOTE TEXT
1	PROVIDE SELF REGULATING HEAT TRACING CABLES IN ROOF GUTTERS WITH ALL PERTINENT CABLES IN DOWNSPOUTS, REFER TO ARCHITECTURAL DRAWINGS FOR GUTTER DETAILS.

DESIGN BY:									
DRAWN BY:									
CHECKED BY:									
APPROVED BY:		1	7/3/2023	ISSUED FOR BID	GS	KG	MC		
CDOT/APPROVED BY:		NO.	DATE	REVISIONS	DES.	DRW.	CHK.	DCCO	CDOT

TRANSYSTEMS
222 SOUTH RIVERSIDE PLAZA SUITE 610
CHICAGO, ILLINOIS 60606

SKIDMORE, OWINGS & MERRILL LLP
224 SOUTH MICHIGAN AVENUE, SUITE 1000
CHICAGO, ILLINOIS 60604

MILHOUSE ENGINEERING & CONSTRUCTION INC
333 SOUTH WABASH AVENUE, SUITE 2901
CHICAGO, ILLINOIS 60604

EXP. 11/30/23
GEORGE E. BOURIS
062-055291
LICENSED PROFESSIONAL ENGINEER OF ILLINOIS

CHICAGO DEPARTMENT OF TRANSPORTATION
DIVISION OF ENGINEERING

STATE / LAKE LOOP ELEVATED STATION
200 NORTH STATE STREET, CHICAGO, IL 60601

PLUMBING - ROOF LEVEL

CDOT PROJECT D-1-209 | DATE: 9/9/2022

SPEC. NO.

DRAWING NO.
P-103

REVISION NO.1

Keynote Legend	
Key Value	Keynote Text
1	PROVIDE BASE CLEANOUT ON RISER AT MINIMUM 18" ABOVE FINISHED GRADE.
2	PROVIDE RUNNING TRAP AT RISER BASE WITH GRADE CLEANOUTS ON LINE TO STREET.
3	PROVIDE HEAT TRACING CABLE SYSTEMS ON SUSPENDED STORM/ WASTE/ SANITARY/ WATER PIPING, INCLUDING ALL PERTINENT SYSTEMS, DEVICES, TRAPS, ETC. WITH INSULATION, EXTERIOR REMOVABLE METAL JACKETS. REFER TO SPECFICATIONS FOR REQUIREMENTS.
4	PROVIDE ALL VERTICAL STORM/ WASTE/ SANITARY PIPING DOWN TO GRADE WITH HEAT TRACING CABLE SYSTEM AND CONTROLS, INCLUDING EXTERIOR INSULATION, EXTERIOR REMOVABLE METAL JACKET. PROVIDE DI-ELECTRIC UNIT SEPARATION ABOVE CLEANOUT LOCATION ON RISER.
5	PROVIDE DI-ELECTRICAL SPOOL PIECE CONNECTION ON SANITARY/WASTE/STORM RISERS ABOVE GROUND BEFORE PIPE INSTALLATION INTO GROUND.

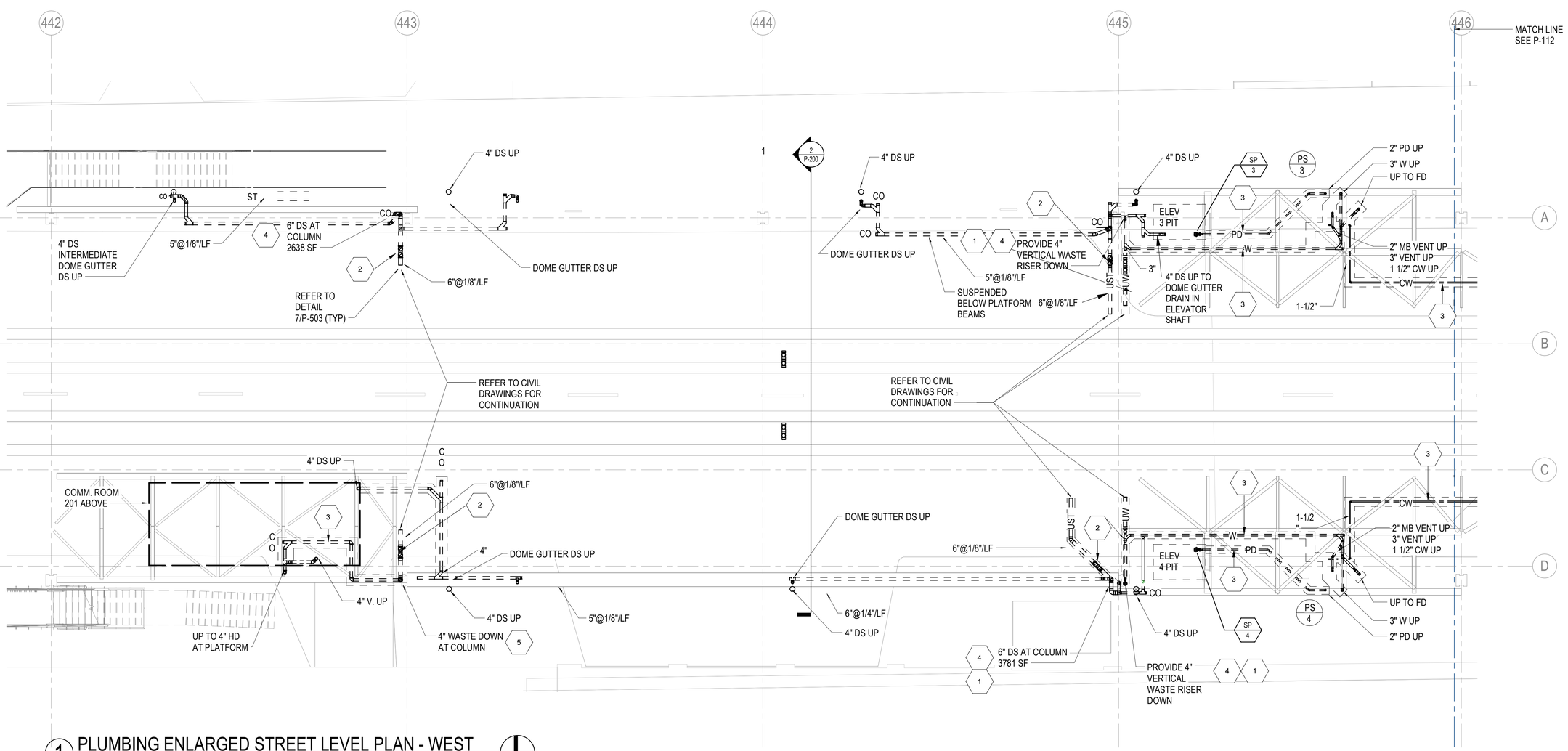

1 PLUMBING ENLARGED STREET LEVEL PLAN - WEST

1/8" = 1'-0"

DESIGN BY:									
DRAWN BY:									
CHECKED BY:									
APPROVED BY:		1	7/3/2023	ISSUED FOR BID	GS	KG	MC		
CDOT/APPROVED BY:		NO.	DATE	REVISIONS	DES.	DRW.	CHK.	DCCO	CDOT

TRANSYSTEMS
222 SOUTH RIVERSIDE PLAZA SUITE 610
CHICAGO, ILLINOIS 60606

SKIDMORE, OWINGS & MERRILL LLP
224 SOUTH MICHIGAN AVENUE, SUITE 1000
CHICAGO, ILLINOIS 60604

MILHOUSE ENGINEERING & CONSTRUCTION INC
333 SOUTH WABASH AVENUE, SUITE 2901
CHICAGO, ILLINOIS 60604

EXP. 11/30/23
GEORGE E. BOURIS
062-055291
LICENSED PROFESSIONAL ENGINEER OF ILLINOIS

CHICAGO DEPARTMENT OF TRANSPORTATION
DIVISION OF ENGINEERING

STATE / LAKE LOOP ELEVATED STATION
200 NORTH STATE STREET, CHICAGO, IL 60601

SPEC. NO.

PLUMBING ENLARGED STREET LEVEL PLAN -WEST

DRAWING NO. P-111

CDOT PROJECT D-1-209

DATE: 9/9/2022

REVISION NO.1

Keynote Legend	
Key Value	Keynote Text
1	PROVIDE HEAT TRACING CABLE SYSTEMS ON SUSPENDED STORM/ WASTE/ SANITARY/ WATER PIPING, INCLUDING ALL PERTINENT SYSTEMS, DEVICES, TRAPS, ETC. WITH INSULATION, EXTERIOR REMOVABLE METAL JACKETS. REFER TO SPECFICATIONS FOR REQUIREMENTS.

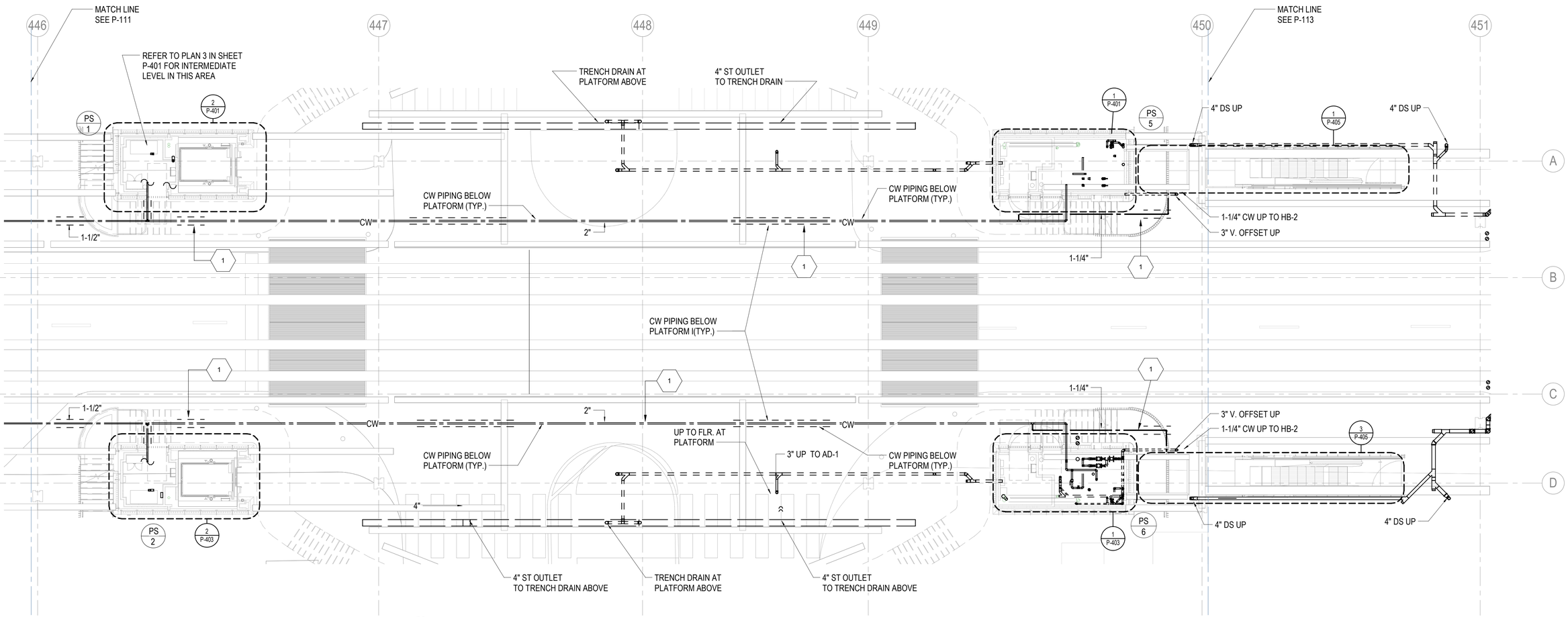

1 PLUMBING ENLARGED STREET LEVEL PLAN - CENTER

1/8" = 1'-0"

DESIGN BY:										
DRAWN BY:										
CHECKED BY:										
APPROVED BY:		1	7/3/2023	ISSUED FOR BID	GS	KG	MC			
CDOT/APPROVED BY:		NO.	DATE	REVISIONS	DES.	DRW.	CHK.	DCCO	CDOT	

TRANSYSTEMS
222 SOUTH RIVERSIDE PLAZA SUITE 610
CHICAGO, ILLINOIS 60606

SKIDMORE, OWINGS & MERRILL LLP
224 SOUTH MICHIGAN AVENUE, SUITE 1000
CHICAGO, ILLINOIS 60604

MILHOUSE ENGINEERING &
CONSTRUCTION INC
333 SOUTH WABASH AVENUE, SUITE 2901
CHICAGO, ILLINOIS 60604

EXP. 11/30/23
GEORGE E. BOURNIA
062-055291
LICENSED PROFESSIONAL ENGINEER OF ILLINOIS

CHICAGO DEPARTMENT
OF TRANSPORTATION
DIVISION OF ENGINEERING

STATE / LAKE LOOP ELEVATED STATION
200 NORTH STATE STREET, CHICAGO, IL 60601

SPEC. NO.

PLUMBING ENLARGED STREET LEVEL PLAN - CENTER

DRAWING NO.
P-112

CDOT PROJECT D-1-209

DATE: 9/9/2022

REVISION NO.1

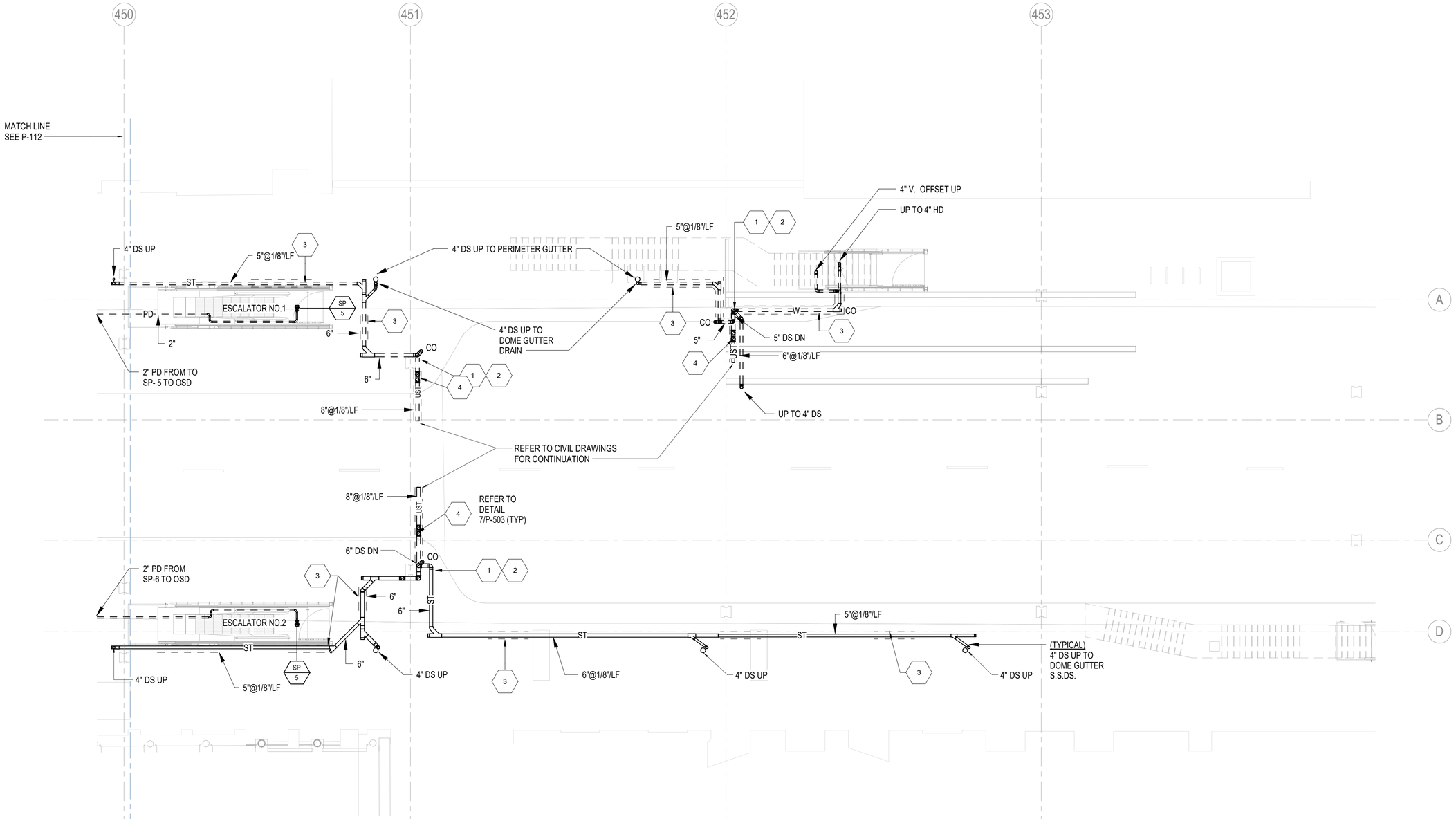

1 PLUMBING ENLARGED STREET LEVEL PLAN - EAST
1/8" = 1'-0"

Keynote Legend

Key Value	Keynote Text
1	PROVIDE BASE CLEANOUT ON RISER AT MINIMUM 18" ABOVE FINISHED GRADE.
2	PROVIDE DI-ELECTRICAL SPOOL PIECE/CONNECTION DOWNSPOUT RISERS ABOVE GROUND BEFORE PIPE INSTALLATION INTO GROUND.
3	ALL SANITARY/WASTE/STORM PIPING SHALL BE HEAT TRACED, INSULATED AND REMOVABLE METAL JACKET.
4	PROVIDE RUNNING TRAP ON DS HORIZONTAL PIPING AT RISER BASE WITH CLEANOUTS EXTENDED TO FINISHED GRADE.

DESIGN BY:										
DRAWN BY:										
CHECKED BY:										
APPROVED BY:		1	7/3/2023	ISSUED FOR BID	GS	KG	MC			
CDOT/APPROVED BY:		NO.	DATE	REVISIONS	DES.	DRW.	CHK.	DCCO	CDOT	

TRANSYSTEMS
222 SOUTH RIVERSIDE PLAZA SUITE 610
CHICAGO, ILLINOIS 60606

SKIDMORE, OWINGS & MERRILL LLP
224 SOUTH MICHIGAN AVENUE, SUITE 1000
CHICAGO, ILLINOIS 60604

MILHOUSE ENGINEERING & CONSTRUCTION INC
333 SOUTH WABASH AVENUE, SUITE 2901
CHICAGO, ILLINOIS 60604

EXP. 11/30/23
GEORGE E. ROUSSE
062-055291
LICENSED PROFESSIONAL ENGINEER OF ILLINOIS

CHICAGO DEPARTMENT OF TRANSPORTATION
DIVISION OF ENGINEERING

STATE / LAKE LOOP ELEVATED STATION
200 NORTH STATE STREET, CHICAGO, IL 60601

PLUMBING ENLARGED STREET LEVEL PLAN - EAST

CDOT PROJECT D-1-209

DATE: 9/9/2022

SPEC. NO.

DRAWING NO. P-113

REVISION NO.1

KEYED NOTES	
KEY VALUE	KEYNOTE TEXT
1	PROVIDE HEAT TRACING CABLE SYSTEMS ON SUSPENDED STORM/ WASTE/ SANITARY/ WATER PIPING, INCLUDING ALL PERTINENT SYSTEMS, DEVICES, TRAPS, ETC. WITH INSULATION, EXTERIOR REMOVABLE METAL JACKETS. REFER TO SPECFICATIONS FOR REQUIREMENTS.

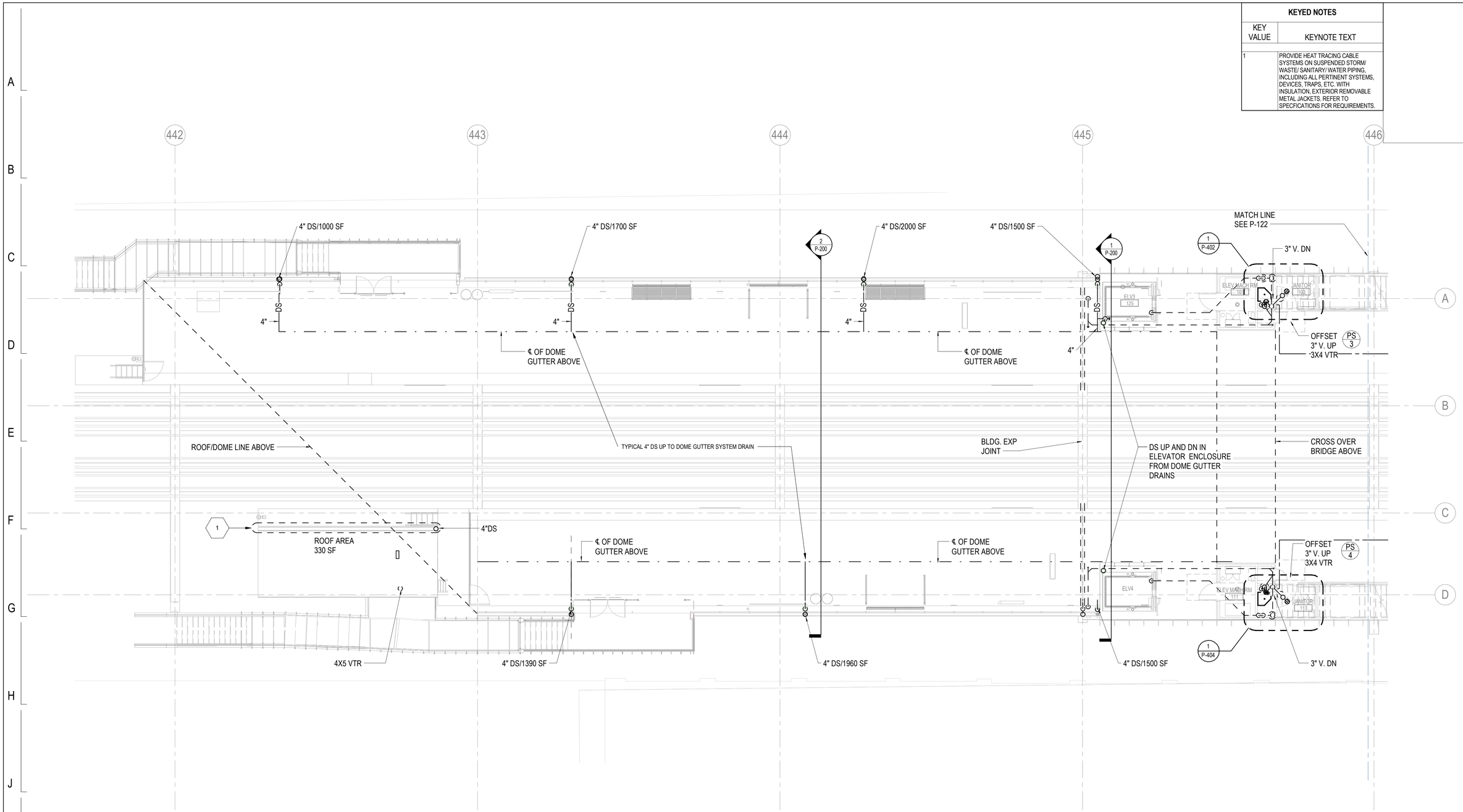

1 ENLARGED PLATFOREM LEVEL PLAN - WEST

1/8" = 1'-0"

DESIGN BY:										
DRAWN BY:										
CHECKED BY:										
APPROVED BY:		1	7/3/2023	ISSUED FOR BID	GS	KG	MC			
CDOT/APPROVED BY:		NO.	DATE	REVISIONS	DES.	DRW.	CHK.	DCCO	CDOT	

TRANSYSTEMS
222 SOUTH RIVERSIDE PLAZA SUITE 610
CHICAGO, ILLINOIS 60606

SKIDMORE, OWINGS & MERRILL LLP
224 SOUTH MICHIGAN AVENUE, SUITE 1000
CHICAGO, ILLINOIS 60604

MILHOUSE ENGINEERING & CONSTRUCTION INC
333 SOUTH WABASH AVENUE, SUITE 2901
CHICAGO, ILLINOIS 60604

Exp. 11/30/23
GEORGE E. ROUNIS
062-055291
LICENSED PROFESSIONAL ENGINEER OF ILLINOIS

CHICAGO DEPARTMENT OF TRANSPORTATION
DIVISION OF ENGINEERING

STATE / LAKE LOOP ELEVATED STATION
200 NORTH STATE STREET, CHICAGO, IL 60601

SPEC. NO.

PLUMBING ENLARGED PLATFORM LEVEL PLAN - WEST

DRAWING NO. P-121

CDOT PROJECT D-1-209 | DATE: 9/9/2022 | REVISION NO. 1

Keynote Legend	
Key Value	Keynote Text
1	PROVIDE SELF REGULATING HEAT TRACING CABLES IN ROOF GUTTERS AND EXTENSION INTO DOWNSPOUTS FOR CENTRAL DOME GUTTER SYSTEM INCLUDING ALL PERTINENT SYSTEM CONTROL ITEMS.

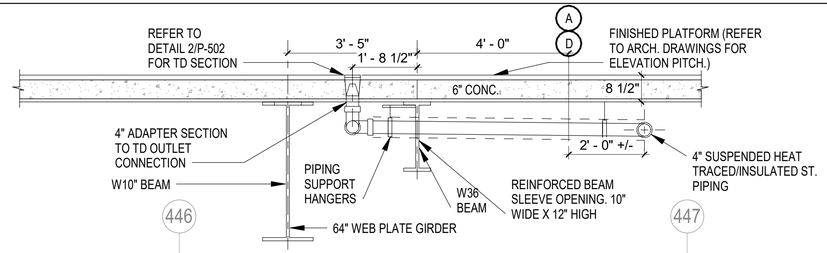

2 TRENCH DRAIN LOCATION SECTION

1/2" = 1'-0"

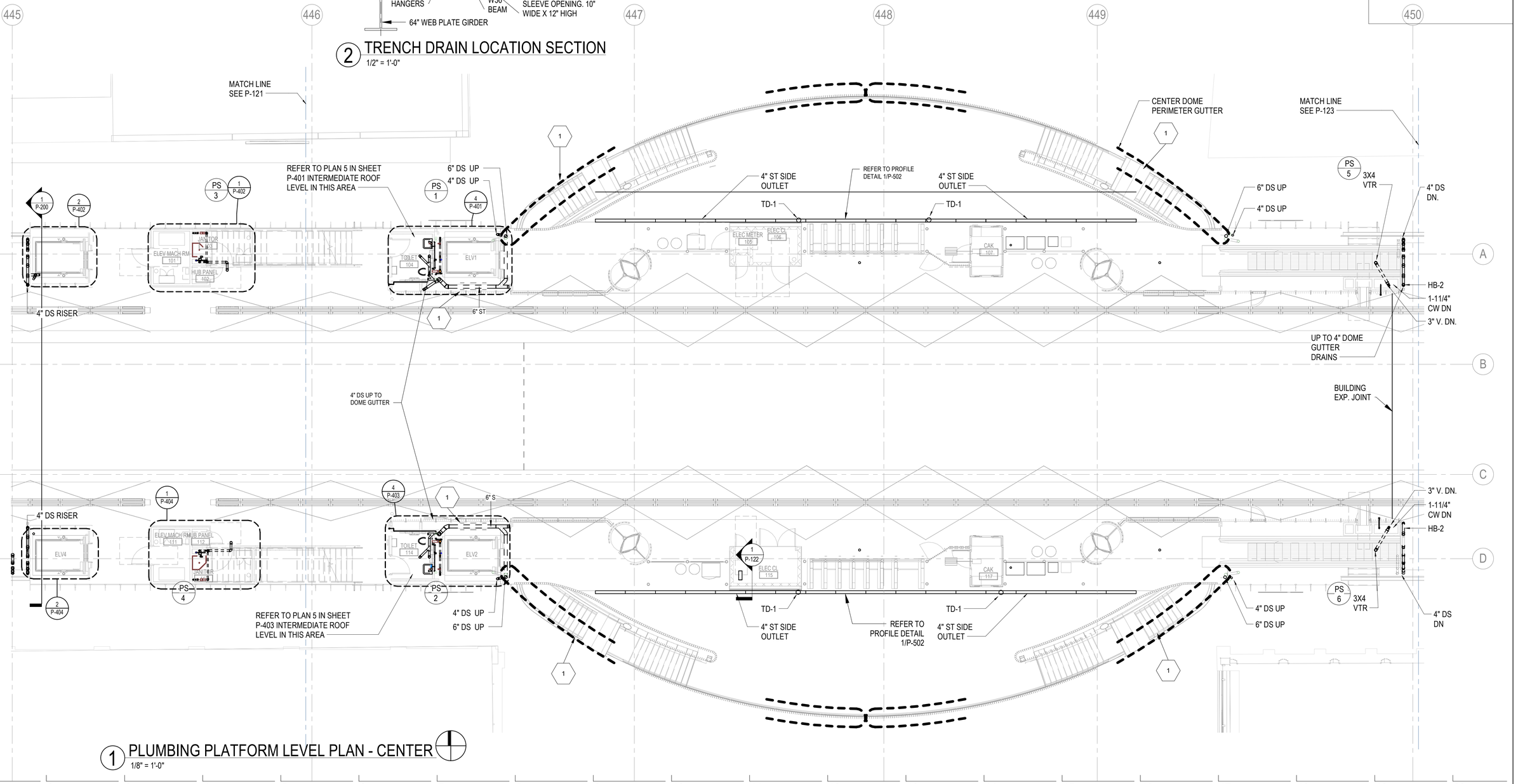

1 PLUMBING PLATFORM LEVEL PLAN - CENTER

1/8" = 1'-0"

DESIGN BY:									
DRAWN BY:									
CHECKED BY:									
APPROVED BY:		1	7/3/2023	ISSUED FOR BID	GS	KG	MC		
CDOT/APPROVED BY:		NO.	DATE	REVISIONS	DES.	DRW.	CHK.	DCCO	CDOT

TRANSYSTEMS
222 SOUTH RIVERSIDE PLAZA SUITE 610
CHICAGO, ILLINOIS 60606

SKIDMORE, OWINGS & MERRILL LLP
224 SOUTH MICHIGAN AVENUE, SUITE 1000
CHICAGO, ILLINOIS 60604

MILHOUSE ENGINEERING & CONSTRUCTION INC
333 SOUTH WABASH AVENUE, SUITE 2901
CHICAGO, ILLINOIS 60604

EXP. 11/30/23
062-055291
GEORGE E. BOUTIS
LICENSED PROFESSIONAL ENGINEER OF ILLINOIS

CHICAGO DEPARTMENT OF TRANSPORTATION
DIVISION OF ENGINEERING

STATE / LAKE LOOP ELEVATED STATION
200 NORTH STATE STREET, CHICAGO, IL 60601

SPEC. NO.

PLUMBING ENLARGED PLATFORM LEVEL PLAN - CENTER

DRAWING NO. P-122

CDOT PROJECT D-1-209

DATE: 9/9/2022

REVISION NO. 1

Keynote Legend	
Key Value	Keynote Text
1	PROVIDE SELF REGULATING HEAT TRACING CABLES IN ROOF GUTTERS AND PERTINENT DOWN SPOUTS WITH ALL PERTINENT SYSTEM/ZONE CONTROLS.
2	PROVIDE HUB DRAIN WITH S.S. GRATE INSERT AT WALKWAY PLATFORM. SET HUB ABOVE PLATFORM WITH 4" PIPE THRU PLATFORM STRUCTURE.

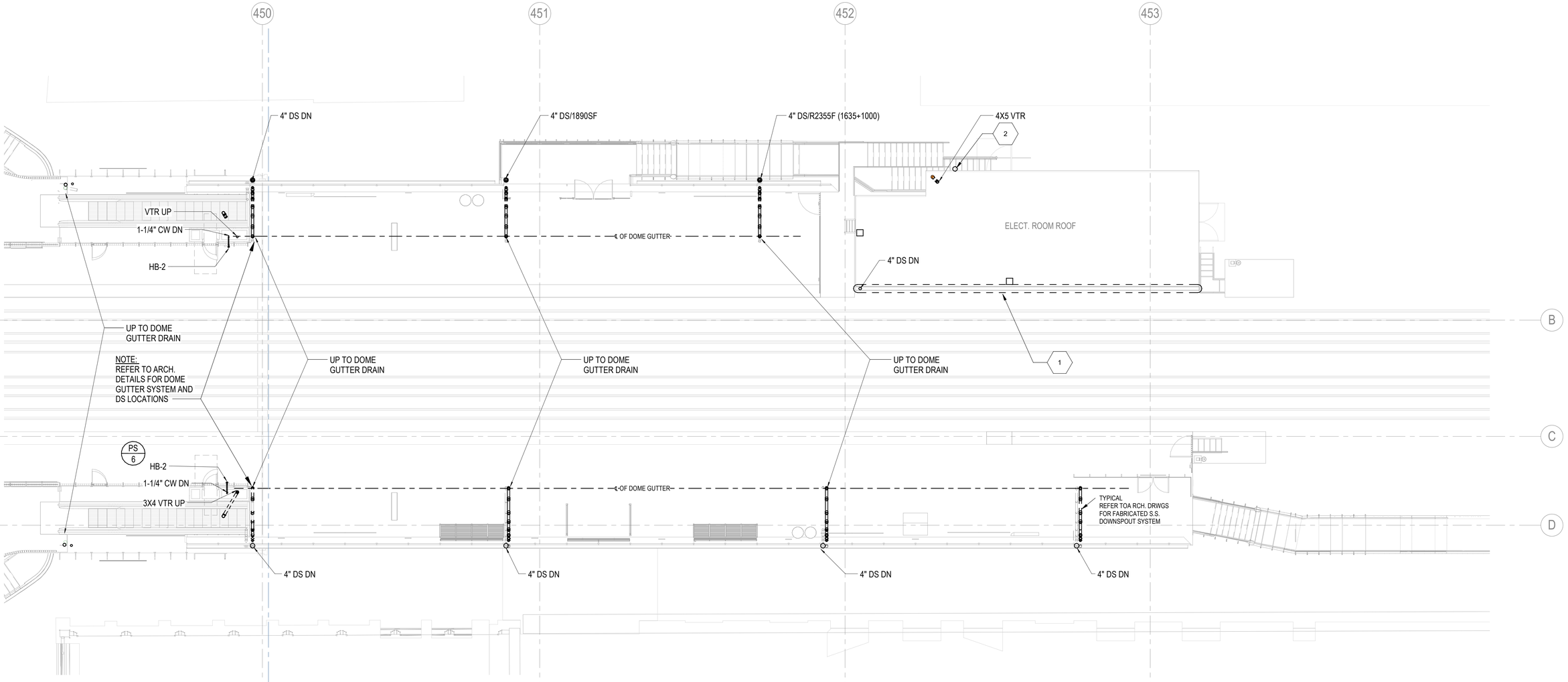

1 PLUMBING PLATFORM LEVEL PLAN - EAST
1/8" = 1'-0"

DESIGN BY:										
DRAWN BY:										
CHECKED BY:										
APPROVED BY:		1	7/3/2023	ISSUED FOR BID	GS	KG	MC			
CDOT/APPROVED BY:		NO.	DATE	REVISIONS	DES.	DRW.	CHK.	DCCO	CDOT	

TRANSYSTEMS
222 SOUTH RIVERSIDE PLAZA SUITE 610
CHICAGO, ILLINOIS 60606

SKIDMORE, OWINGS & MERRILL LLP
224 SOUTH MICHIGAN AVENUE, SUITE 1000
CHICAGO, ILLINOIS 60604

MILHOUSE ENGINEERING & CONSTRUCTION INC
333 SOUTH WABASH AVENUE, SUITE 2901
CHICAGO, ILLINOIS 60604

EXP. 11/30/23
GEORGE E. BOURIS
062-055291
LICENSED PROFESSIONAL ENGINEER OF ILLINOIS

CHICAGO DEPARTMENT OF TRANSPORTATION
DIVISION OF ENGINEERING

STATE / LAKE LOOP ELEVATED STATION
200 NORTH STATE STREET, CHICAGO, IL 60601

PLUMBING ENLARGED PLATFORM LEVEL PLAN - EAST

CDOT PROJECT D-1-209

DATE: 9/9/2022

SPEC. NO.

DRAWING NO. P-123

REVISION NO. 1

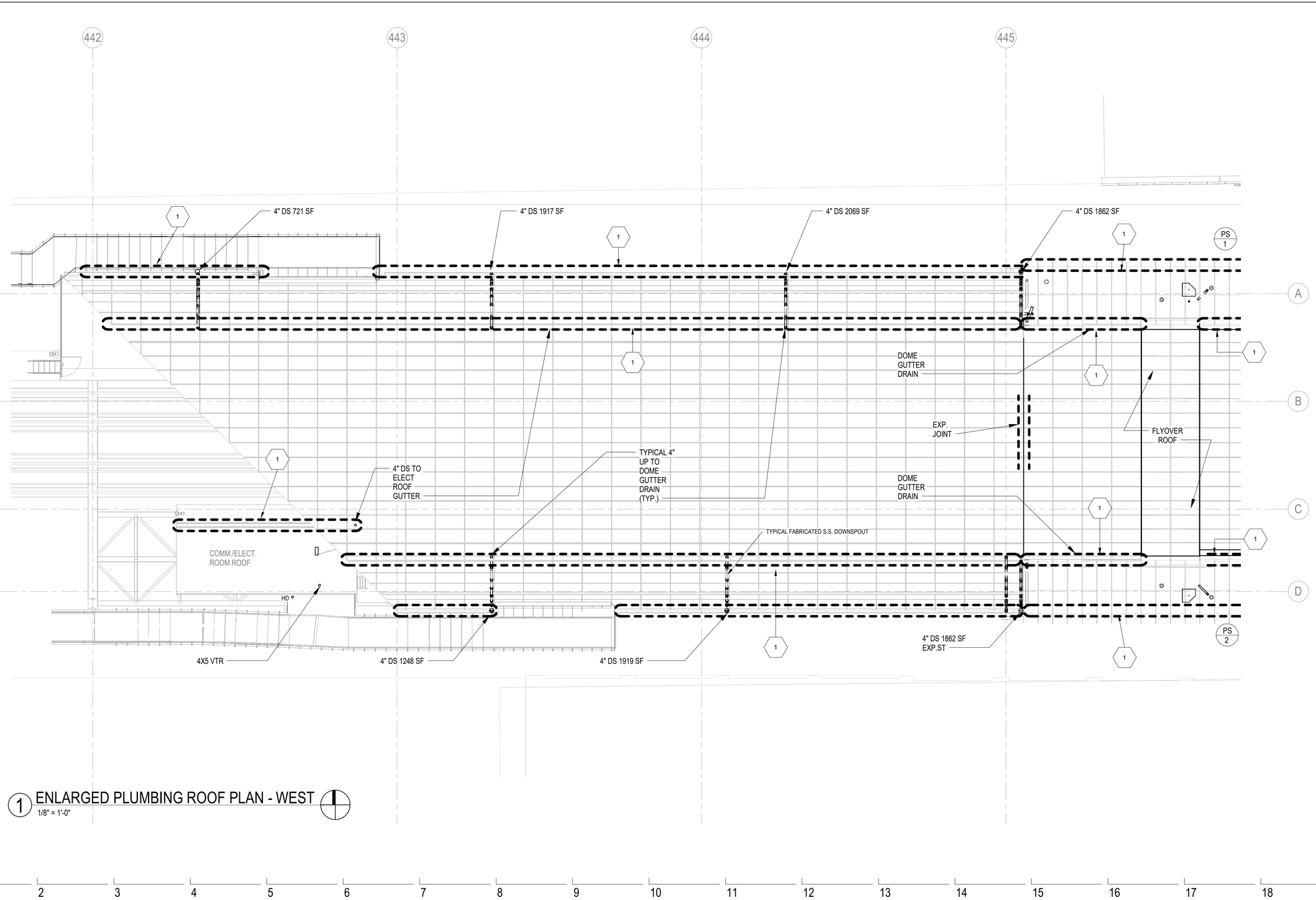

1 ENLARGED PLUMBING ROOF PLAN - WEST
1/8" = 1'-0"

KEYED NOTES	
KEY VALUE	KEYNOTE TEXT
1	PROVIDE SELF REGULATING HEAT TRACING CABLES IN ROOF GUTTERS WITH ALL PERTINENT CABLES IN DOWNSPOUTS, REFER TO ARCHITECTURAL DRAWINGS FOR GUTTER DETAILS.

DESIGN BY:										
DRAWN BY:										
CHECKED BY:										
APPROVED BY:		1	7/3/2023	ISSUED FOR BID	GS	KG	MC			
CDOT/APPROVED BY:		NO.	DATE	REVISIONS	DES.	DRW.	CHK.	DCCO	CDOT	

TRANSYSTEMS
222 SOUTH RIVERSIDE PLAZA SUITE 610
CHICAGO, ILLINOIS 60606

SKIDMORE, OWINGS & MERRILL LLP
224 SOUTH MICHIGAN AVENUE, SUITE 1000
CHICAGO, ILLINOIS 60604

MILHOUSE ENGINEERING & CONSTRUCTION INC
333 SOUTH WABASH AVENUE, SUITE 2901
CHICAGO, ILLINOIS 60604

Exp. 11/30/23
GEORGE E. BOURIS
062-055291
LICENSED PROFESSIONAL ENGINEER OF ILLINOIS

CHICAGO DEPARTMENT OF TRANSPORTATION
DIVISION OF ENGINEERING

STATE / LAKE LOOP ELEVATED STATION
200 NORTH STATE STREET, CHICAGO, IL 60601

ENLARGED PLUMBING ROOF PLAN - WEST

CDOT PROJECT D-1-209

DATE: 9/9/2022

SPEC. NO.

DRAWING NO.
P-131

REVISION NO.1

KEYED NOTES	
KEY VALUE	KEYNOTE TEXT
1	PROVIDE SELF REGULATING HEAT TRACING CABLES IN ROOF GUTTERS WITH ALL PERTINENT CABLES IN DOWNSPOUTS, REFER TO ARCHITECTURAL DRAWINGS FOR GUTTER DETAILS.

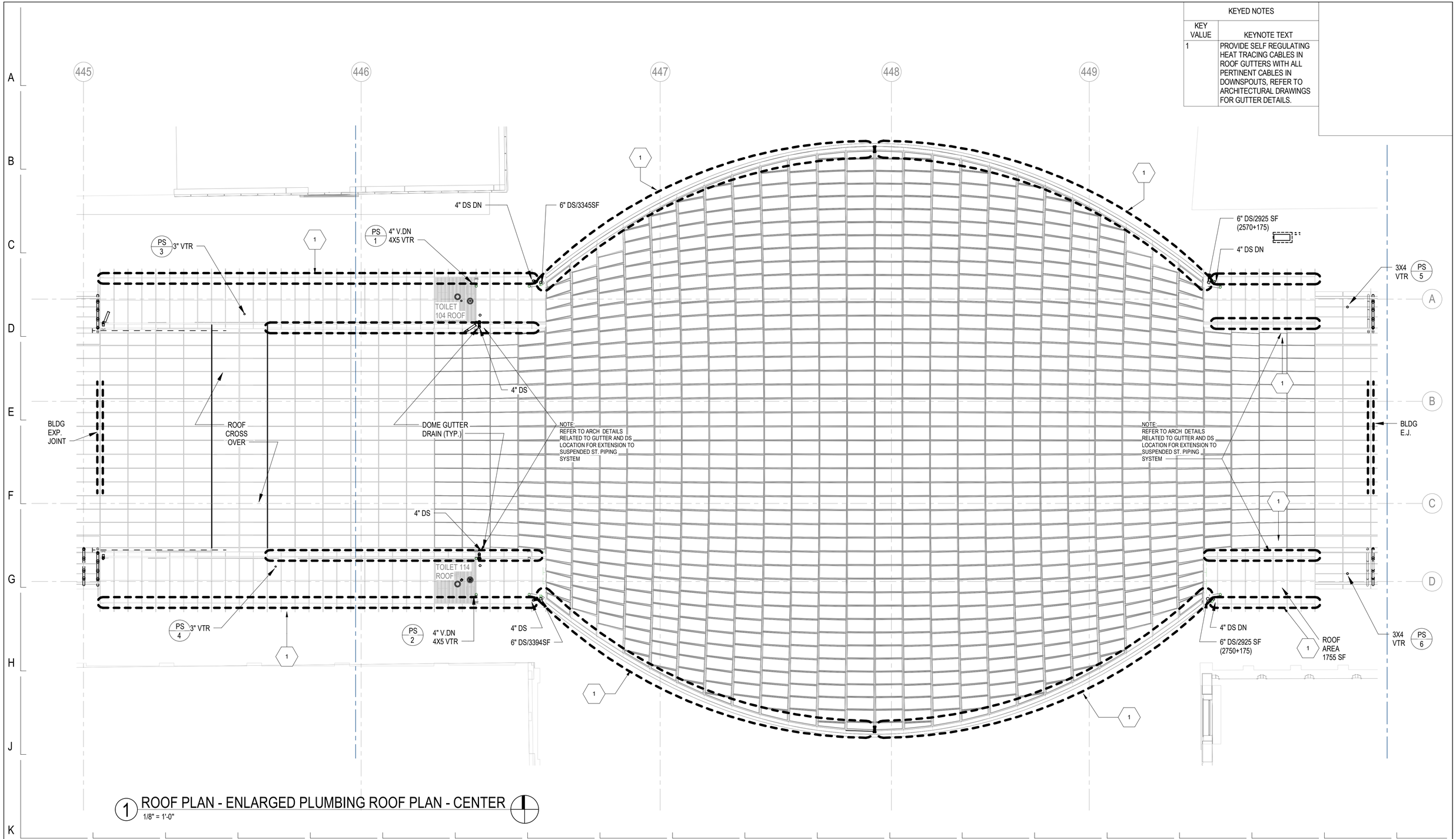

1 ROOF PLAN - ENLARGED PLUMBING ROOF PLAN - CENTER
1/8" = 1'-0"

DESIGN BY:										
DRAWN BY:										
CHECKED BY:										
APPROVED BY:		1	7/3/2023	ISSUED FOR BID	GS	KG	MC			
CDOT/APPROVED BY:		NO.	DATE	REVISIONS	DES.	DRW.	CHK.	DCCO	CDOT	

TRANSYSTEMS
222 SOUTH RIVERSIDE PLAZA SUITE 610
CHICAGO, ILLINOIS 60606

SKIDMORE, OWINGS & MERRILL LLP
224 SOUTH MICHIGAN AVENUE, SUITE 1000
CHICAGO, ILLINOIS 60604

MILHOUSE ENGINEERING & CONSTRUCTION INC
333 SOUTH WABASH AVENUE, SUITE 2901
CHICAGO, ILLINOIS 60604

EXP. 11/30/23
GEORGE E. BOURIS
062-055291
LICENSED PROFESSIONAL ENGINEER OF ILLINOIS

CHICAGO DEPARTMENT OF TRANSPORTATION
DIVISION OF ENGINEERING

STATE / LAKE LOOP ELEVATED STATION
200 NORTH STATE STREET, CHICAGO, IL 60601

SPEC. NO.

ENLARGED PLUMBING ROOF PLAN - CENTER

DRAWING NO.
P-132

CDOT PROJECT D-1-209

DATE: 9/9/2022

REVISION NO.1

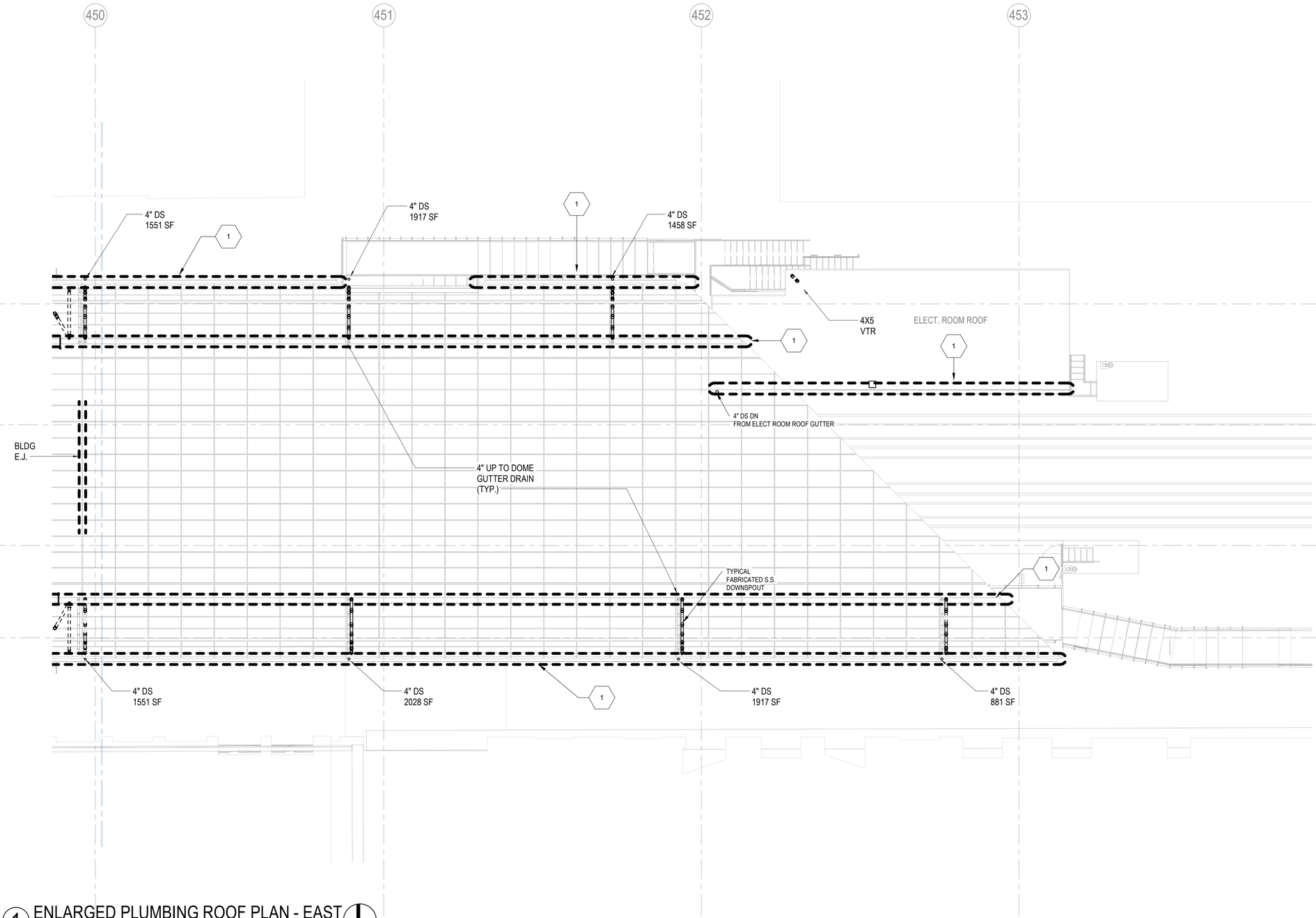

1 ENLARGED PLUMBING ROOF PLAN - EAST
1/8" = 1'-0"

KEYED NOTES

KEY VALUE	KEYNOTE TEXT
1	PROVIDE SELF REGULATING HEAT TRACING CABLES IN ROOF GUTTERS WITH ALL PERTINENT CABLES IN DOWNSPOUTS, REFER TO ARCHITECTURAL DRAWINGS FOR GUTTER DETAILS.

DESIGN BY:										
DRAWN BY:										
CHECKED BY:										
APPROVED BY:		1	7/3/2023	ISSUED FOR BID	GS	KG	MC			
CDOT/APPROVED BY:		NO.	DATE	REVISIONS	DES.	DRW.	CHK.	DCCO	CDOT	

TRANSYSTEMS
222 SOUTH RIVERSIDE PLAZA SUITE 610
CHICAGO, ILLINOIS 60606

SKIDMORE, OWINGS & MERRILL LLP
224 SOUTH MICHIGAN AVENUE, SUITE 1000
CHICAGO, ILLINOIS 60604

MILHOUSE ENGINEERING &
CONSTRUCTION INC
333 SOUTH WABASH AVENUE, SUITE 2901
CHICAGO, ILLINOIS 60604

Exp. 11/30/23
GEORGE E. BOURNIAS
062-055291
LICENSED PROFESSIONAL ENGINEER OF ILLINOIS

CHICAGO DEPARTMENT
OF TRANSPORTATION
DIVISION OF ENGINEERING

STATE / LAKE LOOP ELEVATED STATION
200 NORTH STATE STREET, CHICAGO, IL 60601

ENLARGED PLUMBING ROOF PLAN - EAST

CDOT PROJECT D-1-209

DATE: 9/9/2022

SPEC. NO.

DRAWING NO.
P-133

REVISION NO.1

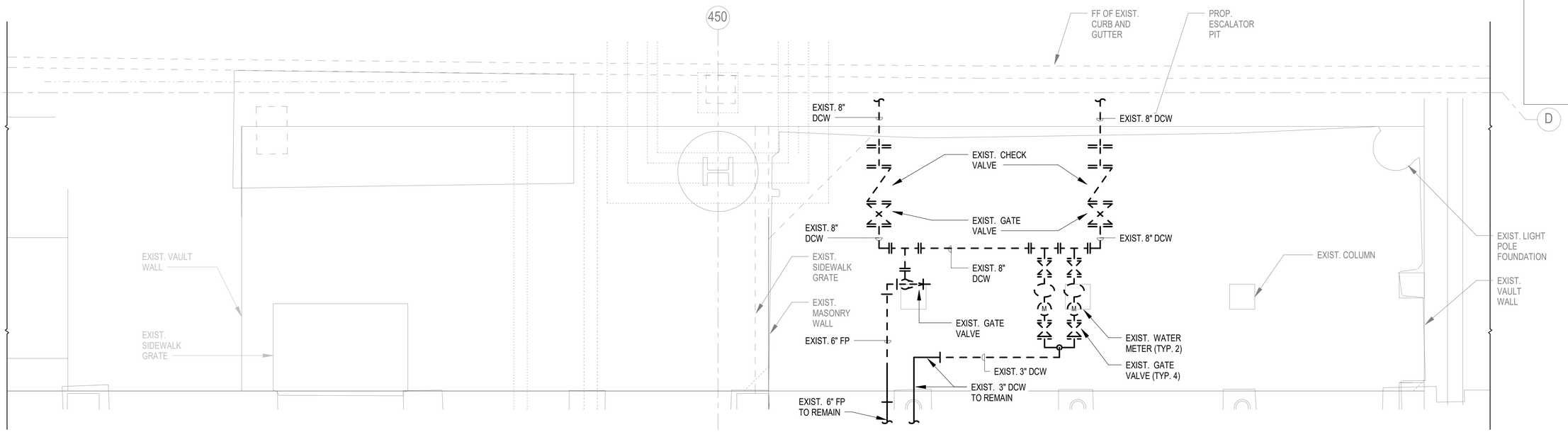

1 177 N STATE ST - VAULT INCOMING WATER SERVICE DEMOLITION PLAN
3/8" = 1'-0"

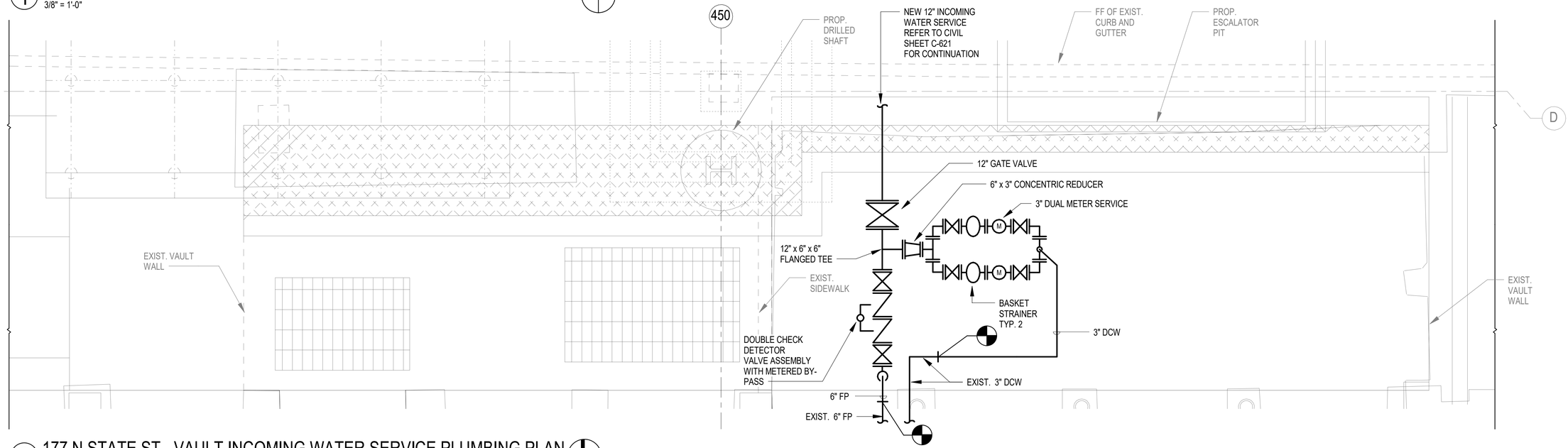

2 177 N STATE ST - VAULT INCOMING WATER SERVICE PLUMBING PLAN
3/8" = 1'-0"

DESIGN BY:										
DRAWN BY:										
CHECKED BY:										
APPROVED BY:		1	7/3/2023	ISSUED FOR BID	GS	KG	MC			
CDOT/APPROVED BY:		NO.	DATE	REVISIONS	DES.	DRW.	CHK.	DCCO	CDOT	

TRANSYSTEMS
222 SOUTH RIVERSIDE PLAZA SUITE 610
CHICAGO, ILLINOIS 60606

SKIDMORE, OWINGS & MERRILL LLP
224 SOUTH MICHIGAN AVENUE, SUITE 1000
CHICAGO, ILLINOIS 60604

MILHOUSE ENGINEERING & CONSTRUCTION INC
333 SOUTH WABASH AVENUE, SUITE 2901
CHICAGO, ILLINOIS 60604

EXP. 11/30/23
GEORGE E. BOURIS
062-055291
LICENSED PROFESSIONAL ENGINEER OF ILLINOIS

CHICAGO DEPARTMENT OF TRANSPORTATION
DIVISION OF ENGINEERING

STATE / LAKE LOOP ELEVATED STATION
200 NORTH STATE STREET, CHICAGO, IL 60601

VAULT DEMOLITION AND PLUMBING PLAN

CDOT PROJECT D-1-209

DATE: 9/9/2022

SPEC. NO.

DRAWING NO.
P-134

REVISION NO.1

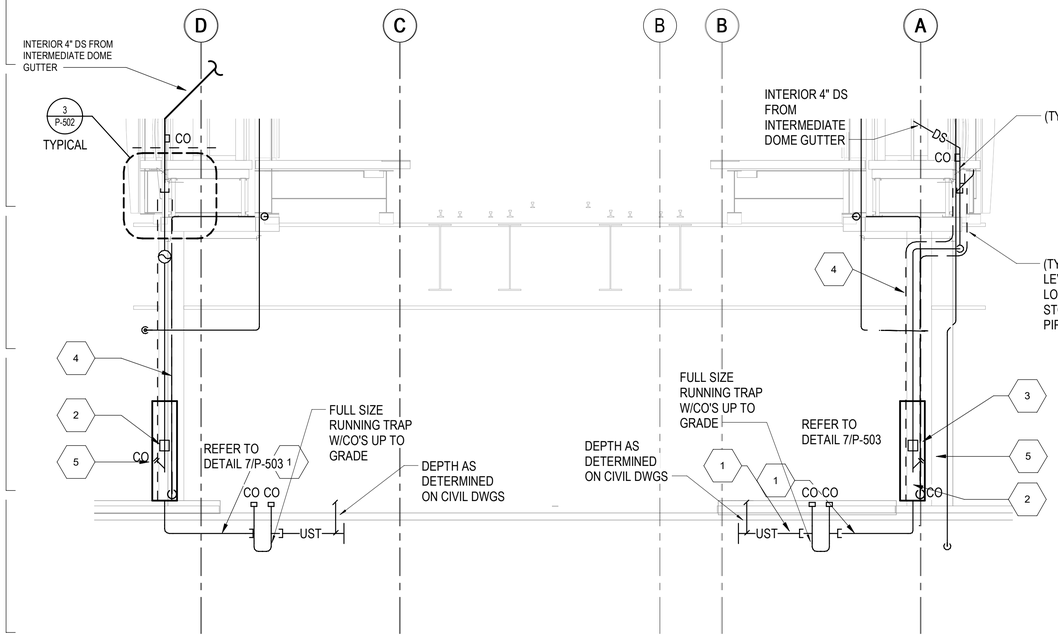

1 TYP. BENT SECTION 1
NTS

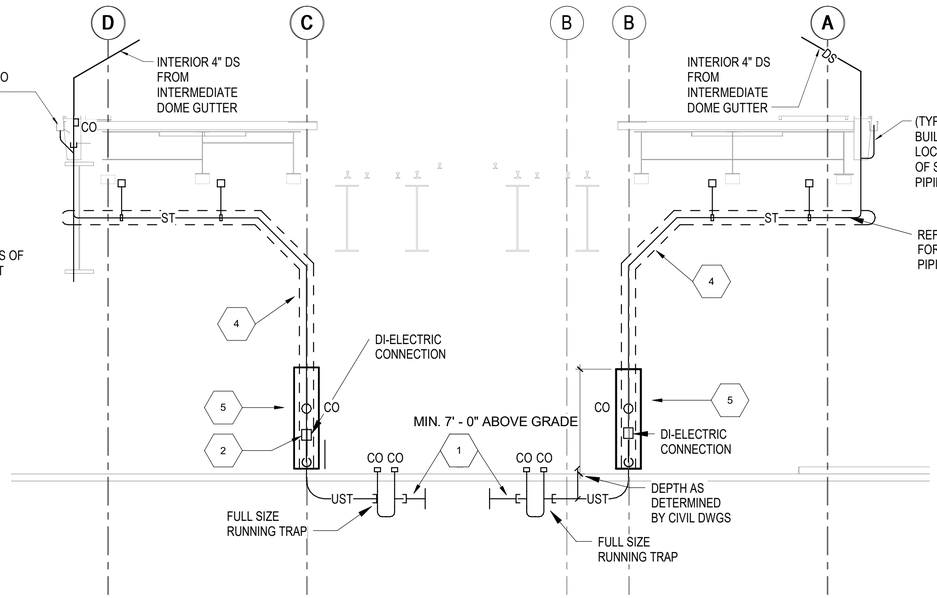

2 TYP. BENT SECTION 2
NTS

KEYED NOTES	
KEY VALUE	KEYNOTE TEXT
1	STORMSEWER EXTENDED TO EXISTING CITY SEVEN/CONNECTION PROVIDED UNDER CIVIL WORK.
2	PROVIDE DI-ELECTRICAL SPOOL PIECE/CONNECTION DOWNSPOUT RISERS ABOVE GROUND BEFORE PIPE INSTALLATION INTO GROUND.
3	PROVIDE 316 STAINLESS STEEL REMOVABLE COVER OVER INSULATED/HEATTRACED PIPING FROM BASE OF DOWNSPOUT AT STREET LEVEL TO POINT MINIMUM OF 7'0" ABOVE GRADE.
4	ALL STORM PIPING SHALL BE INSULATED, HEAT TRACED AND METAL JACKETED.
5	PROVIDE BASE C.O. IN ALL VERTICAL STORM RISERS PRIOR TO STREET CONNECTION WITH C.O. EXTENSION COVER EXTENDED THROUGH S.S. COVER.

DESIGN BY:									
DRAWN BY:									
CHECKED BY:									
APPROVED BY:		1	7/3/2023	ISSUED FOR BID	GS	KG	MC		
CDOT/APPROVED BY:		NO.	DATE	REVISIONS	DES.	DRW.	CHK.	DCCO	CDOT

TRANSYSTEMS
222 SOUTH RIVERSIDE PLAZA SUITE 610
CHICAGO, ILLINOIS 60606

SKIDMORE, OWINGS & MERRILL LLP
224 SOUTH MICHIGAN AVENUE, SUITE 1000
CHICAGO, ILLINOIS 60604

MILHOUSE ENGINEERING & CONSTRUCTION INC
333 SOUTH WABASH AVENUE, SUITE 2901
CHICAGO, ILLINOIS 60604

EXP. 11/30/23
GEORGE E. BOURNIAS
062-055291
LICENSED PROFESSIONAL ENGINEER OF ILLINOIS

CHICAGO DEPARTMENT OF TRANSPORTATION
DIVISION OF ENGINEERING

STATE / LAKE LOOP ELEVATED STATION
200 NORTH STATE STREET, CHICAGO, IL 60601

PLUMBING SECTIONS AT COLUMNS

CDOT PROJECT D-1-209

DATE: 9/9/2022

SPEC. NO.

DRAWING NO. P-200

REVISION NO. 1

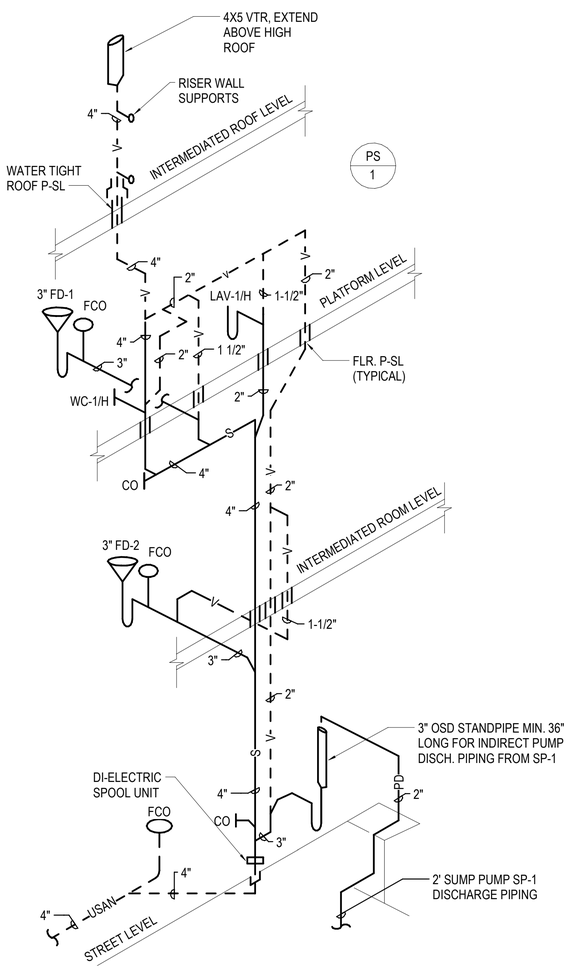

1 SANITARY RISER DIAGRAM TOILET 104-NORTH
NTS

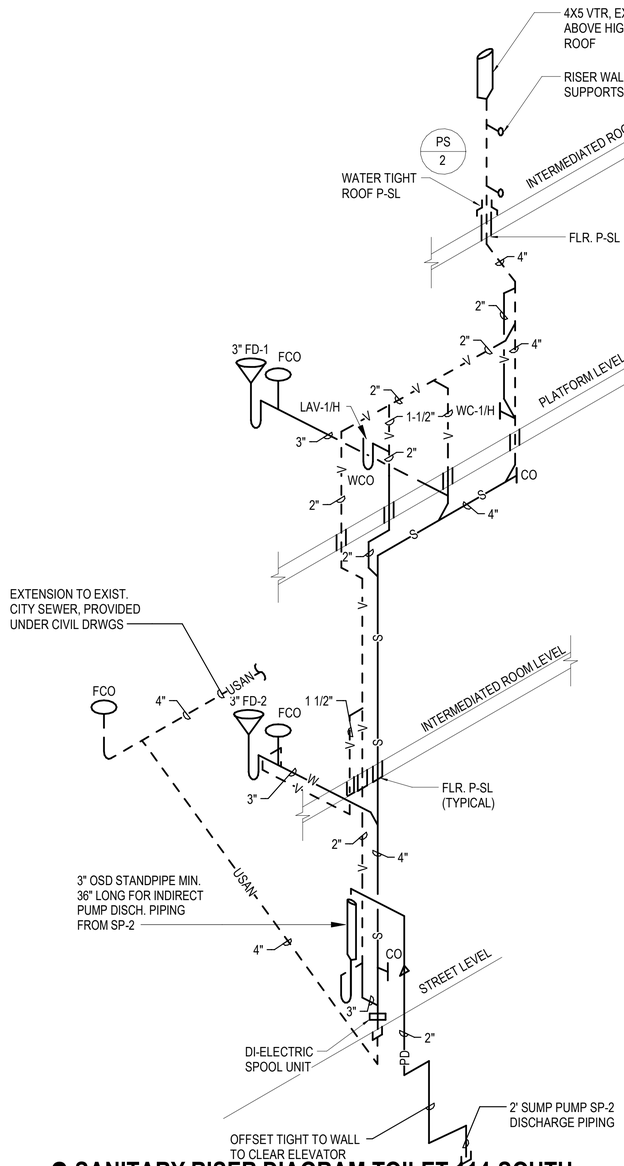

2 SANITARY RISER DIAGRAM TOILET 114-SOUTH
NTS

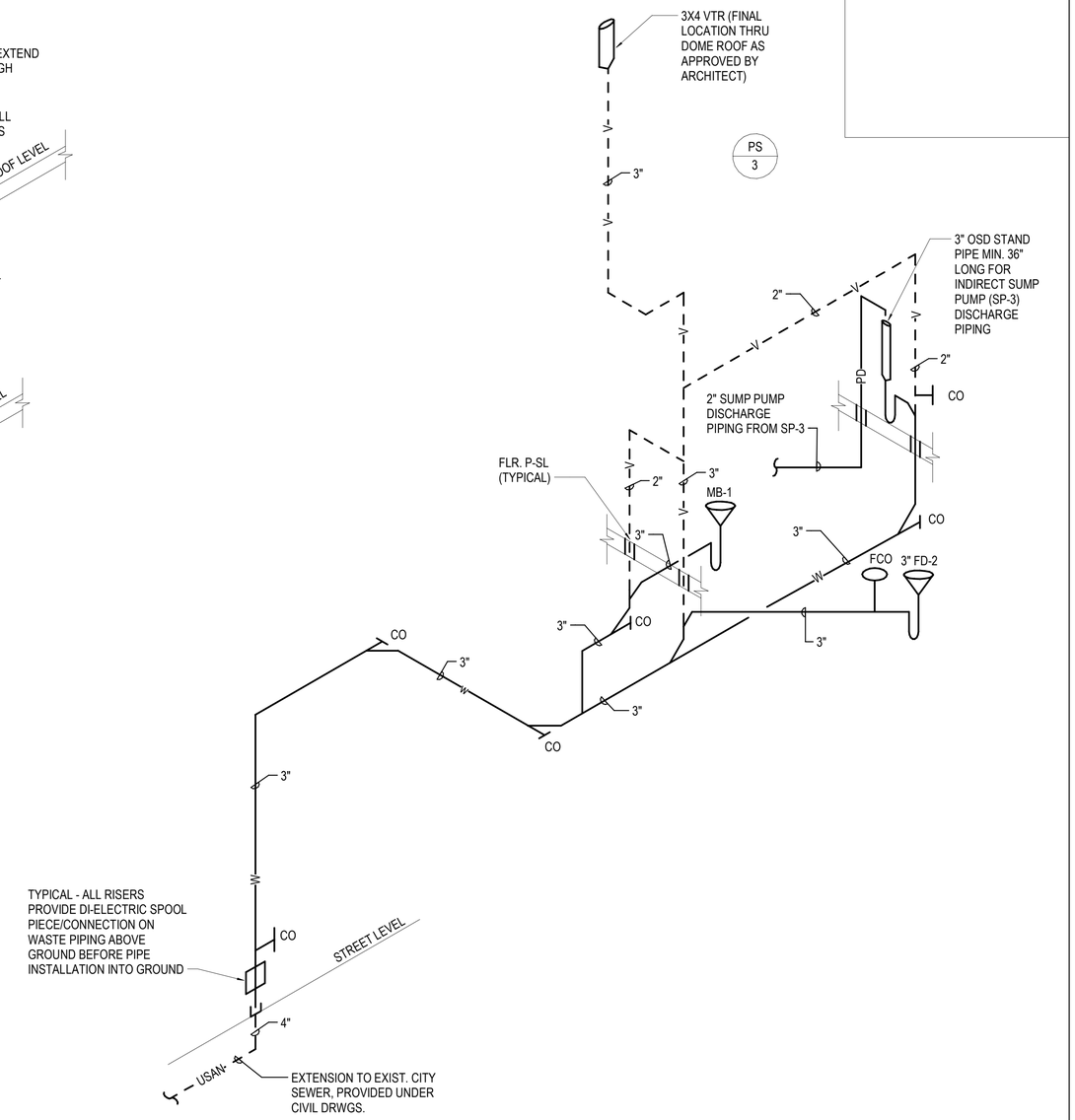

SANITARY RISER DIAGRAM JANITOR CLOSET 103-NORTH
3
NTS

DESIGN BY:										
DRAWN BY:										
CHECKED BY:										
APPROVED BY:		1	7/3/2023	ISSUED FOR BID	GS	KG	MC			
CDOT/APPROVED BY:		NO.	DATE	REVISIONS	DES.	DRW.	CHK.	DCCO	CDOT	

TRANSYSTEMS
222 SOUTH RIVERSIDE PLAZA SUITE 610
CHICAGO, ILLINOIS 60606

SKIDMORE, OWINGS & MERRILL LLP
224 SOUTH MICHIGAN AVENUE, SUITE 1000
CHICAGO, ILLINOIS 60604

MILHOUSE ENGINEERING & CONSTRUCTION INC
333 SOUTH WABASH AVENUE, SUITE 2901
CHICAGO, ILLINOIS 60604

EXP. 11/30/23
GEORGE E. BOURNIAS
062-055291
LICENSED PROFESSIONAL ENGINEER OF ILLINOIS

CHICAGO DEPARTMENT OF TRANSPORTATION
DIVISION OF ENGINEERING

STATE / LAKE LOOP ELEVATED STATION
200 NORTH STATE STREET, CHICAGO, IL 60601

PLUMBING RISERS

CDOT PROJECT D-1-209

DATE: 9/9/2022

SPEC. NO.

DRAWING NO. P-300

REVISION NO.1

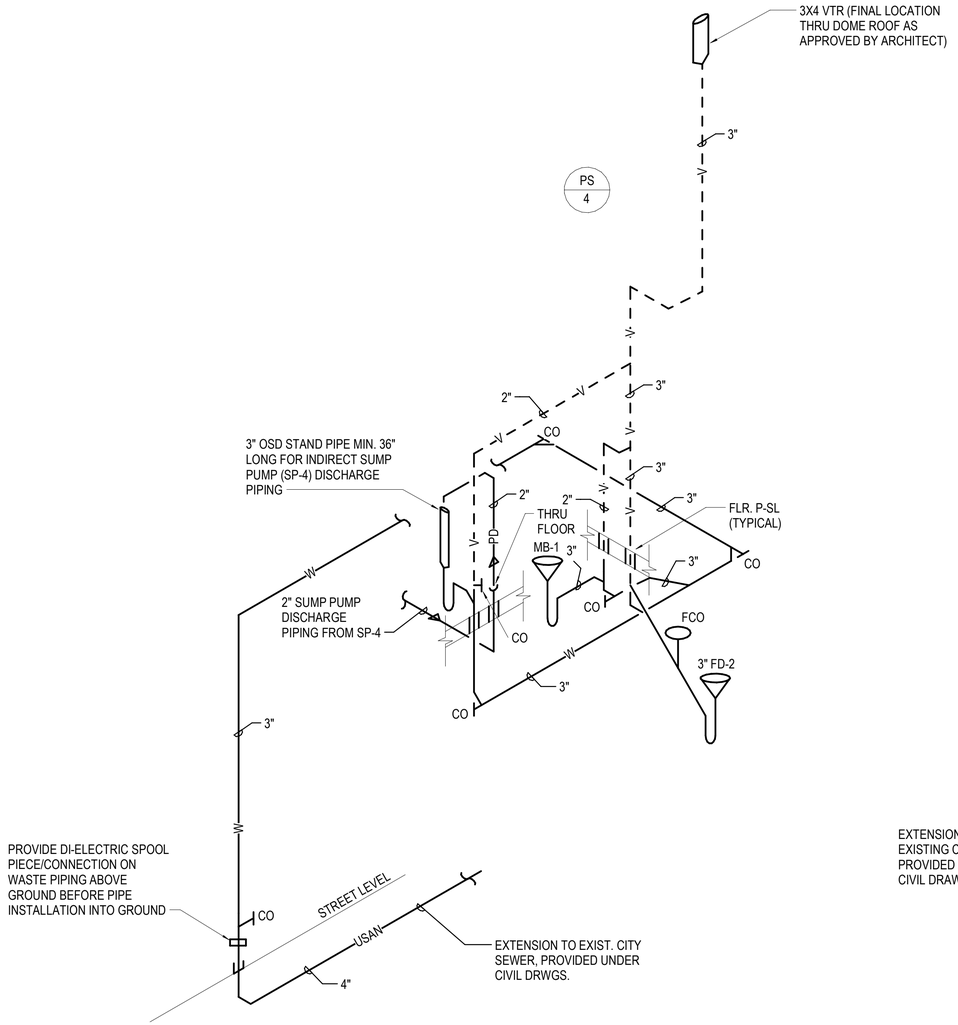

1 SANITARY RISER DIAGRAM AT JANITOR CLOSET 113-SOUTH

NTS

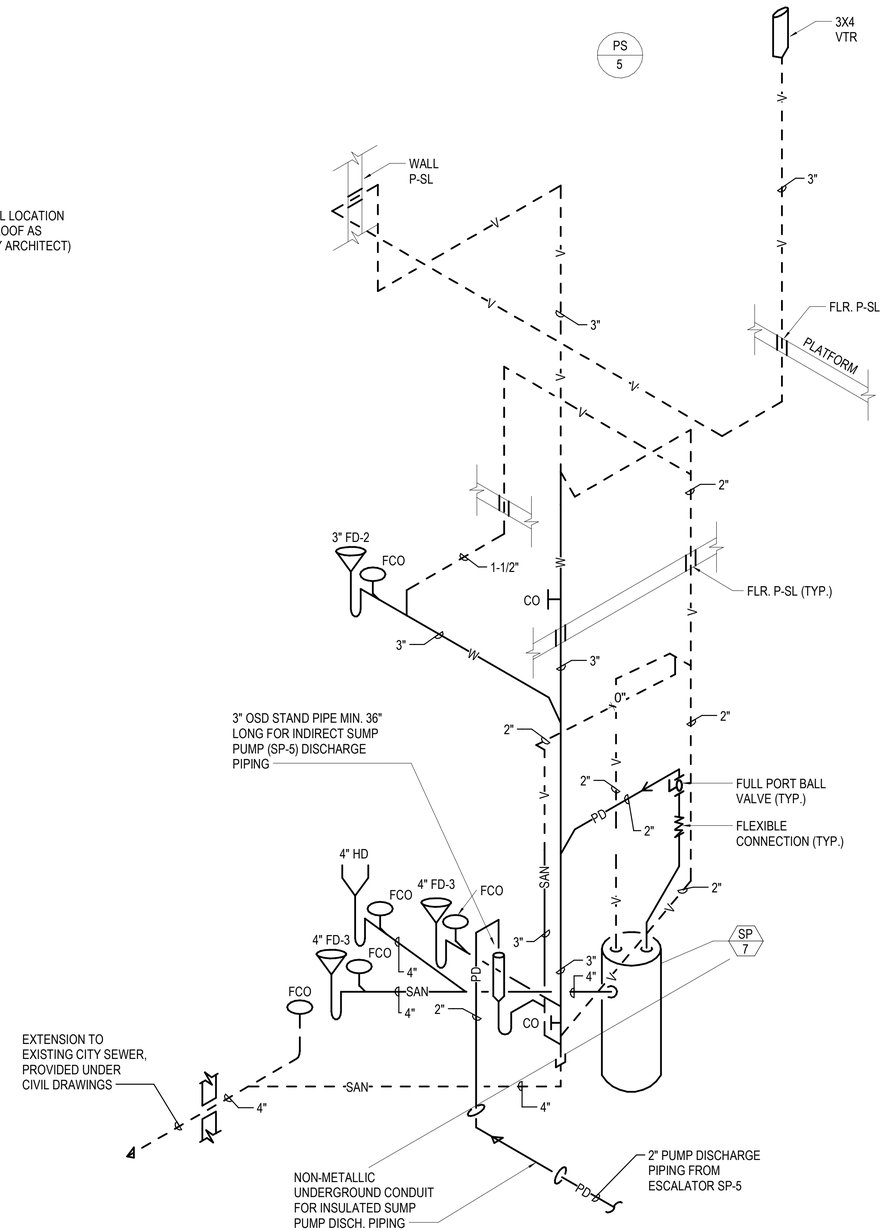

2 SANITARY RISER DIAGRAM AT UTILITY ROOM 003-NORTH

NTS

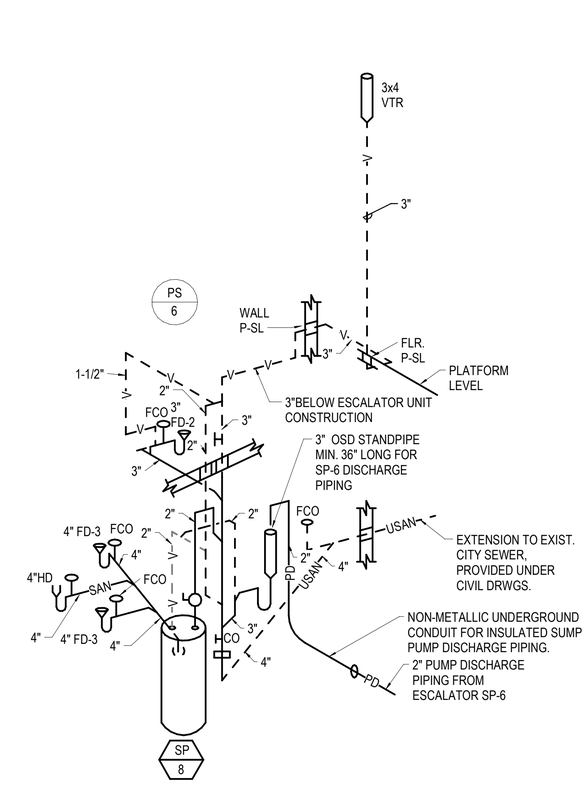

3 SANITARY RISER DIAGRAM AT UTILITY ROOM 013-SOUTH

NTS

NO.	DATE	REVISIONS	DES.	DRW.	CHK.	DCCO	CDOT
1	7/3/2023	ISSUED FOR BID	GS	BF	MC		

DESIGN BY:
DRAWN BY:
CHECKED BY:
APPROVED BY:
CDOT/APPROVED BY:

TRANSYSTEMS
222 SOUTH RIVERSIDE PLAZA SUITE 610
CHICAGO, ILLINOIS 60606

SOM
SKIDMORE, OWINGS & MERRILL LLP
224 SOUTH MICHIGAN AVENUE, SUITE 1000
CHICAGO, ILLINOIS 60604

MILHOUSE
MILHOUSE ENGINEERING & CONSTRUCTION INC
333 SOUTH WABASH AVENUE, SUITE 2901
CHICAGO, ILLINOIS 60604

EXP. 11/30/23
GEORGE E. BOURNIAS
062-055291
LICENSED PROFESSIONAL ENGINEER OF ILLINOIS

CDOT
CHICAGO DEPARTMENT OF TRANSPORTATION
DIVISION OF ENGINEERING

STATE / LAKE LOOP ELEVATED STATION
200 NORTH STATE STREET, CHICAGO, IL 60601

SPEC. NO.

PLUMBING RISERS

DRAWING NO. P-301

CDOT PROJECT D-1-209

DATE: 9/9/2022

REVISION NO.1

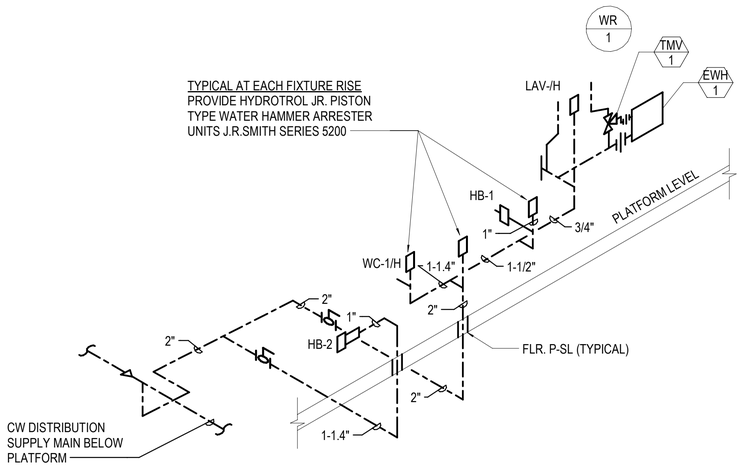

1 WATER RISER DIAGRAM TOILET 104-NORTH
NTS

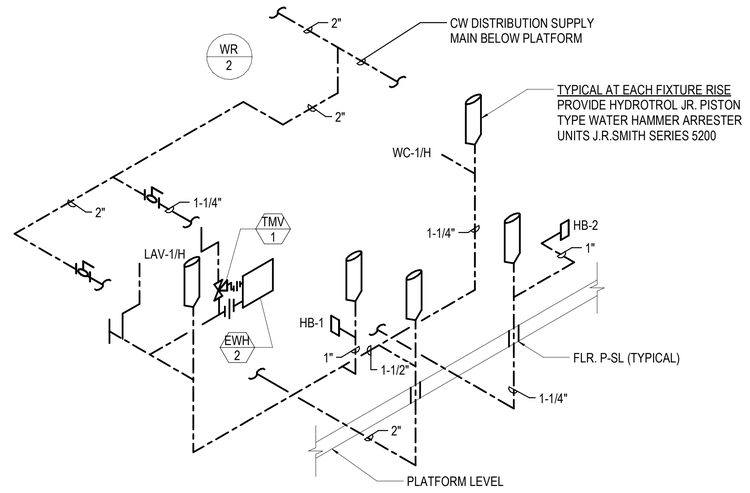

2 WATER RISER DIAGRAM TOILET 114-SOUTH
NTS

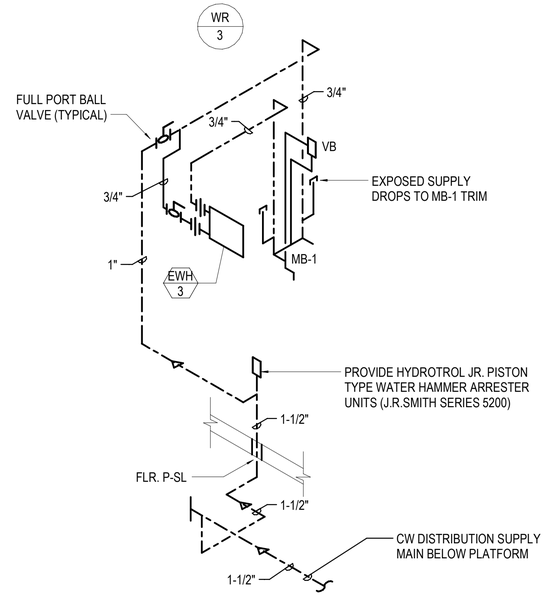

3 WATER RISER DIAGRAM JANITOR CLOSET 104-NORTH
NTS

NO.	DATE	REVISIONS	DES.	DRW.	CHK.	DCCO	CDOT
1	7/3/2023	ISSUED FOR BID	GS	KG	MC		

DESIGN BY:
DRAWN BY:
CHECKED BY:
APPROVED BY:
CDOT/APPROVED BY:

TRANSYSTEMS
222 SOUTH RIVERSIDE PLAZA SUITE 610
CHICAGO, ILLINOIS 60606

SKIDMORE, OWINGS & MERRILL LLP
224 SOUTH MICHIGAN AVENUE, SUITE 1000
CHICAGO, ILLINOIS 60604

MILHOUSE ENGINEERING &
CONSTRUCTION INC
333 SOUTH WABASH AVENUE, SUITE 2901
CHICAGO, ILLINOIS 60604

EXP. 11/30/23
GEORGE E. ROUSSOS
062-055291
LICENSED PROFESSIONAL ENGINEER OF ILLINOIS

CHICAGO DEPARTMENT
OF TRANSPORTATION
DIVISION OF ENGINEERING

STATE / LAKE LOOP ELEVATED STATION
200 NORTH STATE STREET, CHICAGO, IL 60601

PLUMBING RISERS

SPEC. NO.

DRAWING NO.
P-302

CDOT PROJECT D-1-209

DATE: 9/9/2022

REVISION NO.1

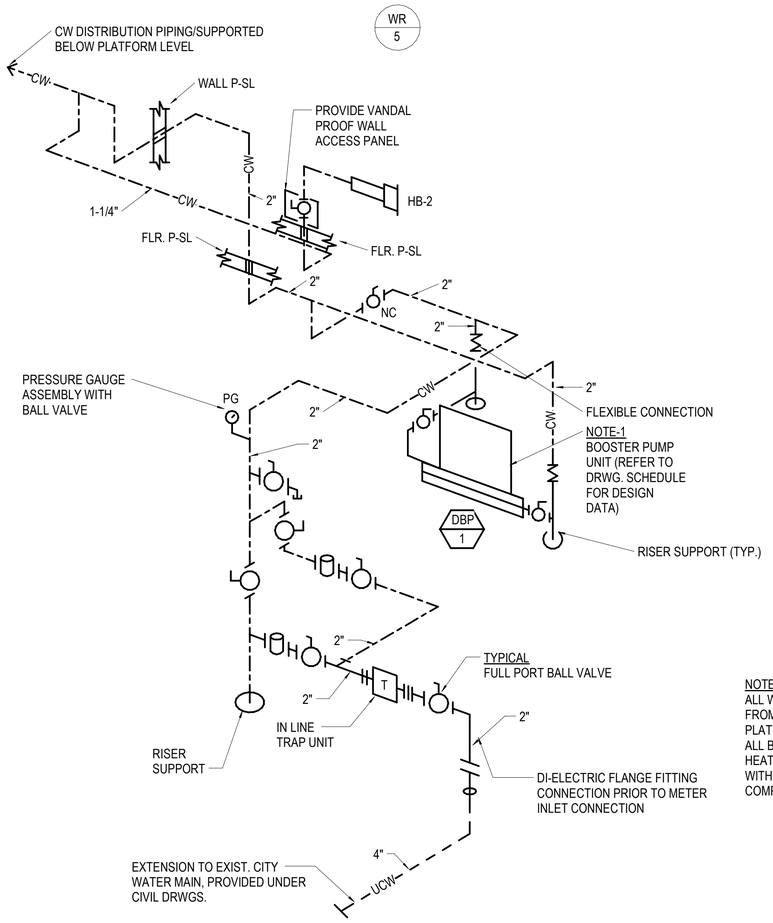

WATER RISER DIAGRAM AT UTILITY ROOM
2 003-NORTH
NTS

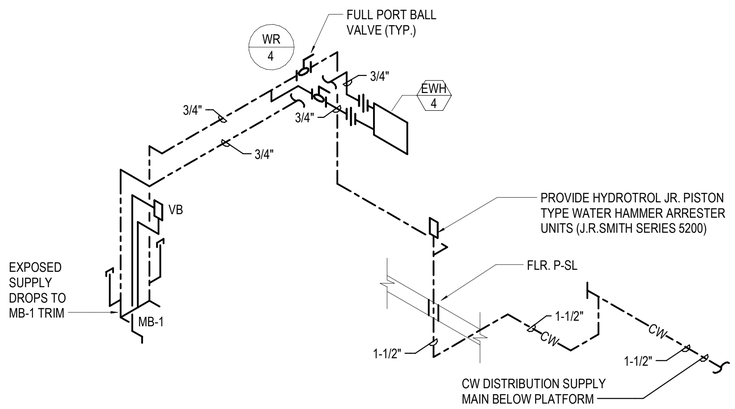

WATER RISER DIAGRAM JANITOR CLOSET
1 113-SOUTH
NTS

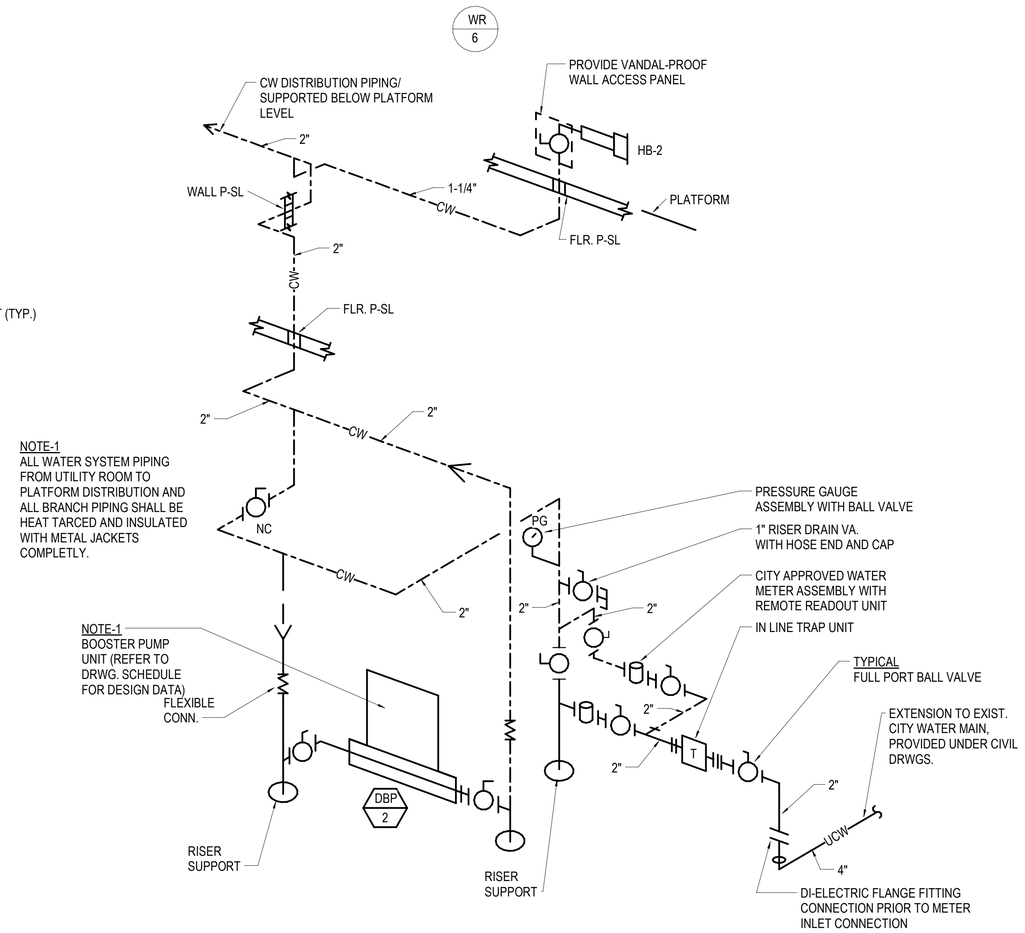

WATER RISER DIAGRAM UTILITY ROOM
3 013-SOUTH
NTS

NO.	DATE	REVISIONS	DES.	DRW.	CHK.	DCCO	CDOT
1	7/3/2023	ISSUED FOR BID	GS	BF	MC		

DESIGN BY:
DRAWN BY:
CHECKED BY:
APPROVED BY:
CDOT/APPROVED BY:

TRANSYSTEMS
222 SOUTH RIVERSIDE PLAZA SUITE 610
CHICAGO, ILLINOIS 60606

SKIDMORE, OWINGS & MERRILL LLP
224 SOUTH MICHIGAN AVENUE, SUITE 1000
CHICAGO, ILLINOIS 60604

MILHOUSE ENGINEERING & CONSTRUCTION INC
333 SOUTH WABASH AVENUE, SUITE 2901
CHICAGO, ILLINOIS 60604

EXP. 11/30/23
062-055291
GEORGE E. BOURIS
LICENSED PROFESSIONAL ENGINEER OF ILLINOIS

CHICAGO DEPARTMENT OF TRANSPORTATION
DIVISION OF ENGINEERING

STATE / LAKE LOOP ELEVATED STATION
200 NORTH STATE STREET, CHICAGO, IL 60601

SPEC. NO.

PLUMBING RISERS

DRAWING NO.
P-303

CDOT PROJECT D-1-209

DATE: 9/9/2022

REVISION NO. 1

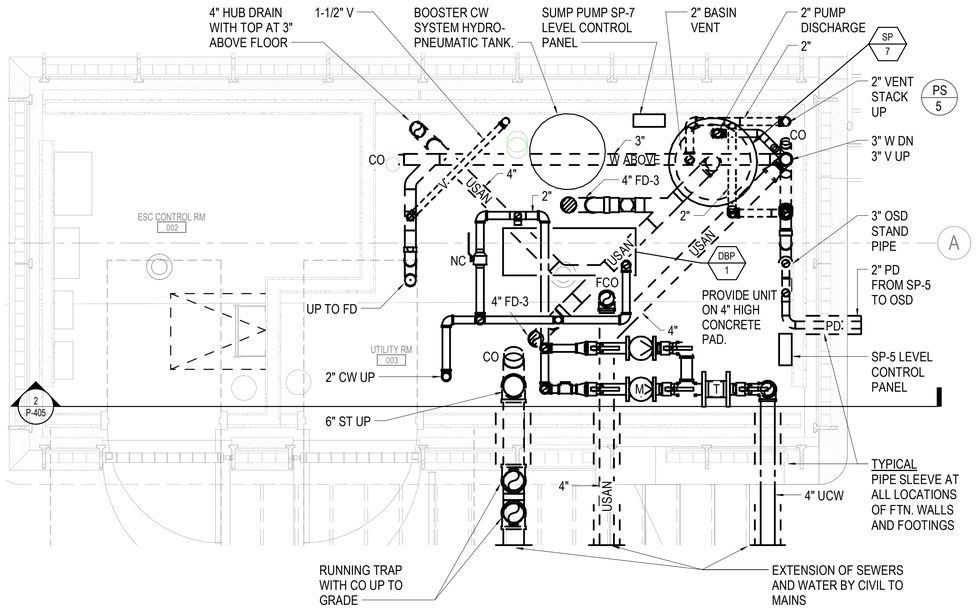

1 ENLARGED UTILITY ROOM 003 PLAN - NORTH
1/2" = 1'-0"

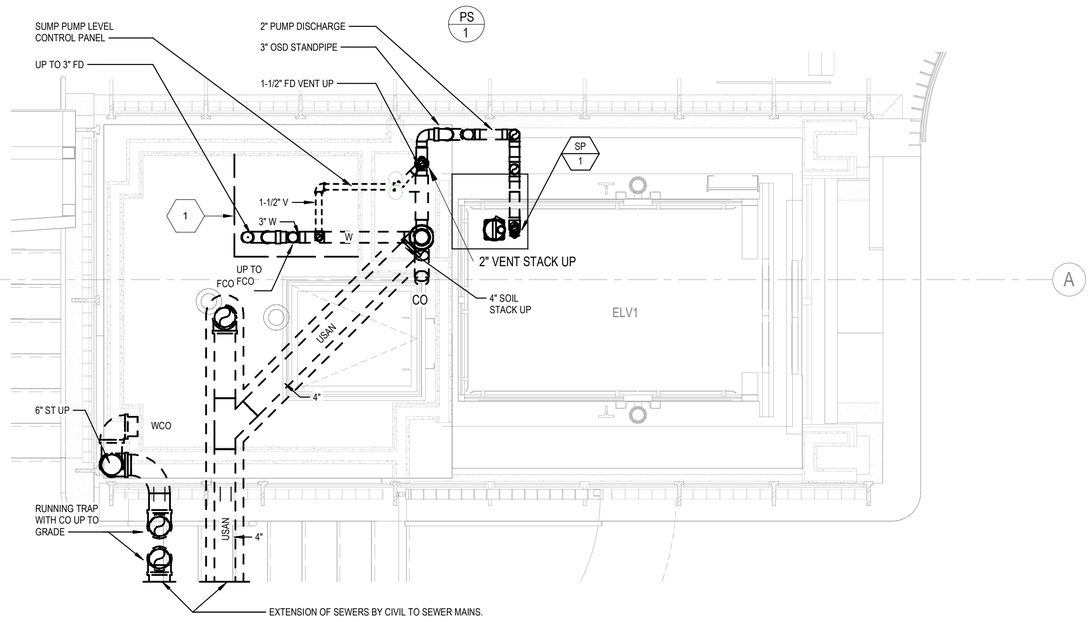

2 ENLARGED ELEVATOR MACHINE ROOM 001 PLAN - NORTH
1/2" = 1'-0"

KEYED NOTES

KEY VALUE	KEYNOTE TEXT
1	PIPING SUSPENDED FROM ROOM CEILING SHALL BE PROVIDED WITH DRAIN PAN AND ENCLOSED IN WATERPROOF ENACASEMENT ENCLOSURE. REFER TO ARCH. DRWGS FOR REQUIREMENTS.

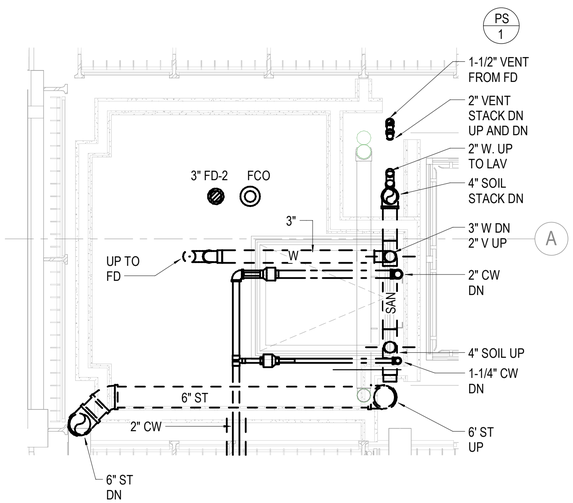

3 ENLARGED ABUTMENT MEZZANINE PLAN - NORTH
1/2" = 1'-0"

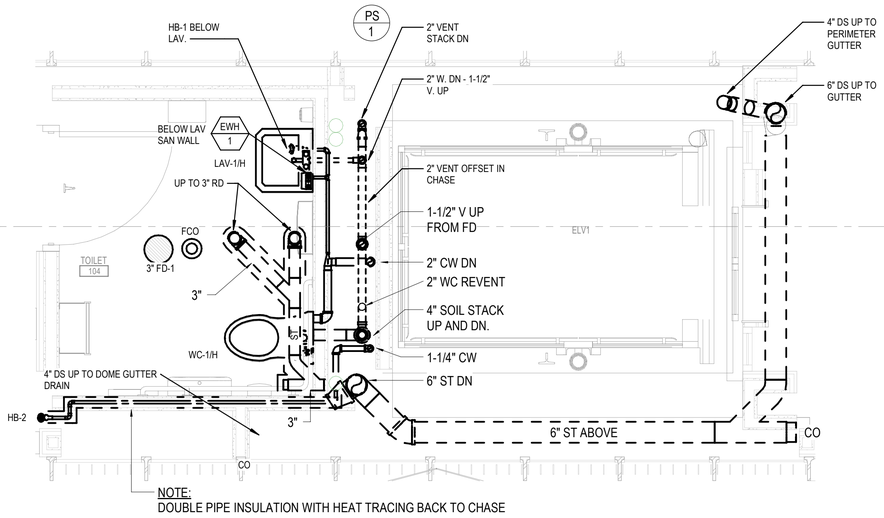

4 ENLARGED TOILET 104 PLAN - NORTH
1/2" = 1'-0"

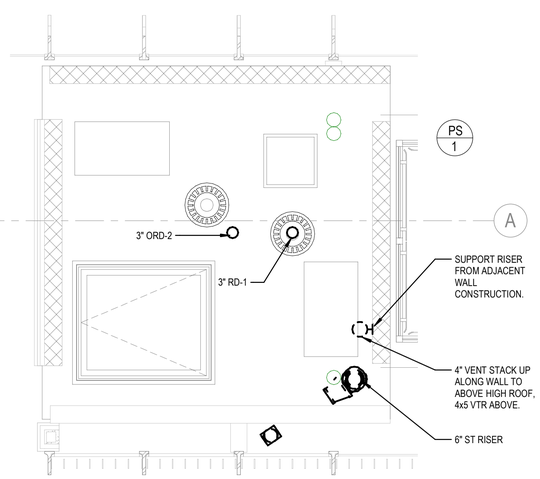

5 ENLARGED INTERMEDIATE ROOF PLAN - NORTH
1/2" = 1'-0"

DESIGN BY:										
DRAWN BY:										
CHECKED BY:										
APPROVED BY:		1	7/3/2023	ISSUED FOR BID	GS	KG	MC			
CDOT/APPROVED BY:		NO.	DATE	REVISIONS	DES.	DRW.	CHK.	DCCO	CDOT	

TRANSYSTEMS
222 SOUTH RIVERSIDE PLAZA SUITE 610
CHICAGO, ILLINOIS 60606

SKIDMORE, OWINGS & MERRILL LLP
224 SOUTH MICHIGAN AVENUE, SUITE 1000
CHICAGO, ILLINOIS 60604

MILHOUSE ENGINEERING & CONSTRUCTION INC
333 SOUTH WABASH AVENUE, SUITE 2901
CHICAGO, ILLINOIS 60604

EXP. 11/30/23
GEORGE E. BOURIS
062-055291
LICENSED PROFESSIONAL ENGINEER OF ILLINOIS

CHICAGO DEPARTMENT OF TRANSPORTATION
DIVISION OF ENGINEERING

STATE / LAKE LOOP ELEVATED STATION
200 NORTH STATE STREET, CHICAGO, IL 60601

SPEC. NO.

ENLARGED ELEVATOR ELV1 PLUMBING PLANS- NORTH

DRAWING NO. P-401

CDOT PROJECT D-1-209 | DATE: 9/9/2022 | REVISION NO.1

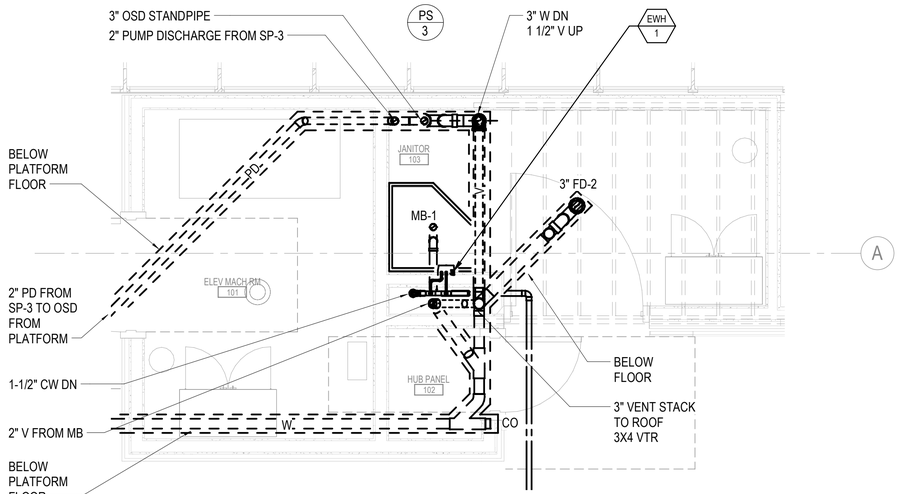

1 ENLARGED JANITORS CLOSET 103 PLAN - NORTH

1/2" = 1'-0"

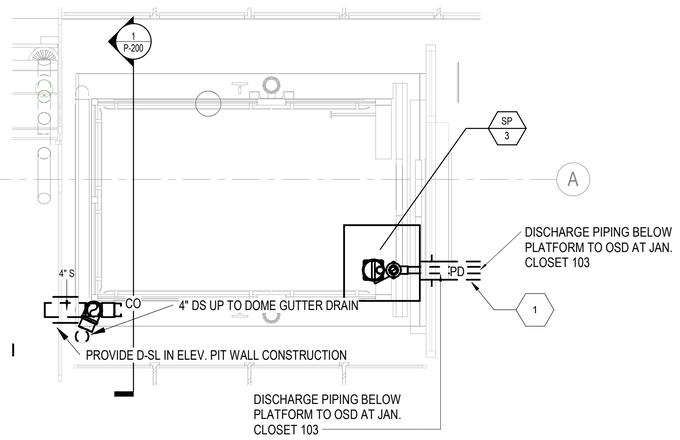

2 ENLARGED ELEVATOR ELV3 PLAN - NORTH

1/2" = 1'-0"

Keynote Legend

Key Value	Keynote Text
1	SUMP PUMP DISCHARGE, WASTE AND COLD WATER PIPING SHALL BE HEAT TRACED FROM DISCHARGE OF PUMP TO OPEN SITE DRAIN. PIPING SHALL BE INSULATED AND PROVIDED WITH REMOVABLE METAL JACKET.

NOTE: SECTION SIMILAR FOR ELEVATOR SUMP PUMP, SP-4, SOUTH

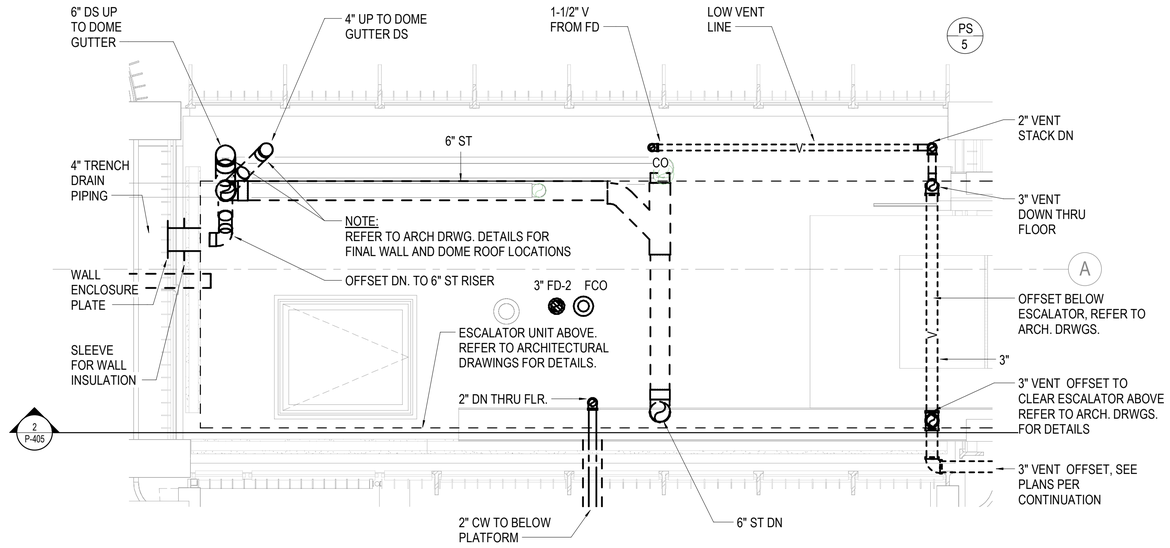

4 ENLARGED AREA PLAN ABOVE UTILITY ROOM 003 - NORTH

1/2" = 1'-0"

DESIGN BY:										
DRAWN BY:										
CHECKED BY:										
APPROVED BY:		1	7/3/2023	ISSUED FOR BID	GS	KG	MC			
CDOT/APPROVED BY:		NO.	DATE	REVISIONS	DES.	DRW.	CHK.	DCCO	CDOT	

TRANSYSTEMS
222 SOUTH RIVERSIDE PLAZA SUITE 610
CHICAGO, ILLINOIS 60606

SKIDMORE, OWINGS & MERRILL LLP
224 SOUTH MICHIGAN AVENUE, SUITE 1000
CHICAGO, ILLINOIS 60604

MILHOUSE ENGINEERING & CONSTRUCTION INC
333 SOUTH WABASH AVENUE, SUITE 2901
CHICAGO, ILLINOIS 60604

EXP. 11/30/23
GEORGE E. BOURIS
062-055291
LICENSED PROFESSIONAL ENGINEER OF ILLINOIS

CHICAGO DEPARTMENT OF TRANSPORTATION
DIVISION OF ENGINEERING

STATE / LAKE LOOP ELEVATED STATION
200 NORTH STATE STREET, CHICAGO, IL 60601

ENLARGED JANITOR CLOSET 103 PLUMBING PLANS - NORTH

CDOT PROJECT D-1-209 | DATE: 9/9/2022

SPEC. NO.

DRAWING NO. P-402

REVISION NO. 1

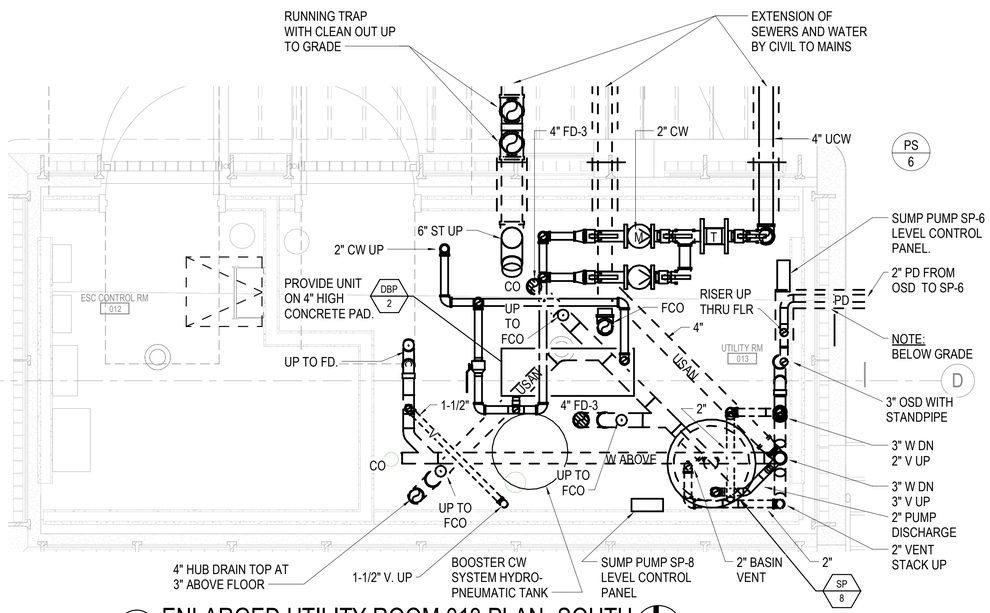

1 ENLARGED UTILITY ROOM 013 PLAN -SOUTH
1/2" = 1'-0"

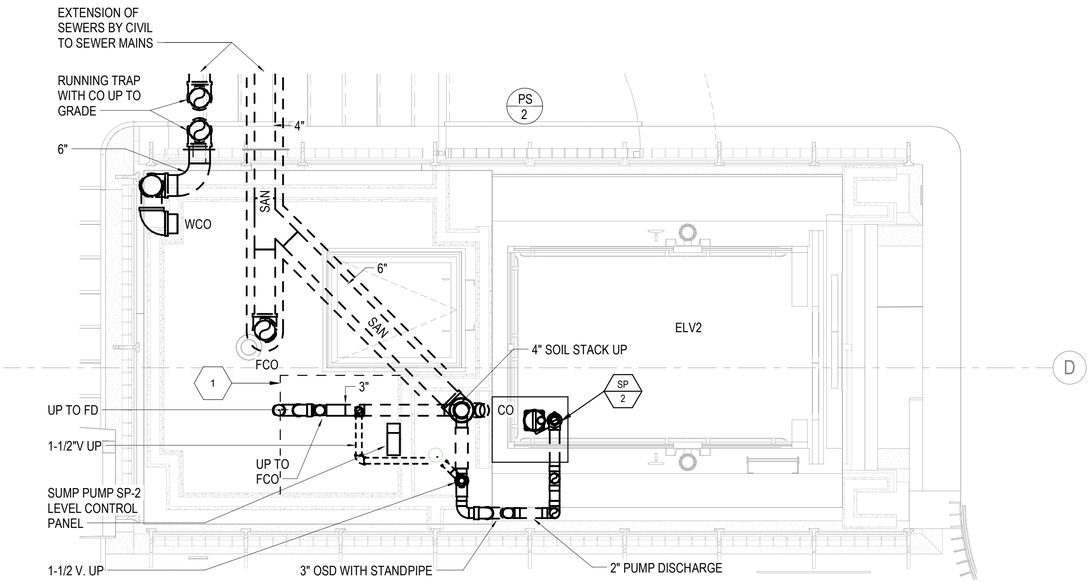

2 ENLARGED ELEVATOR MACHINE ROOM 011 PLAN - SOUTH
1/2" = 1'-0"

KEYED NOTES

KEY VALUE	KEYNOTE TEXT
1	PIPING SUSPENDED FROM ROOM CEILING SHALL BE PROVIDED WITH DRAIN PAN AND ENCLOSED IN WATERPROOF ENACASEMENT ENCLOSURE. REFER TO ARCH. DRWGS FOR REQUIREMENTS.

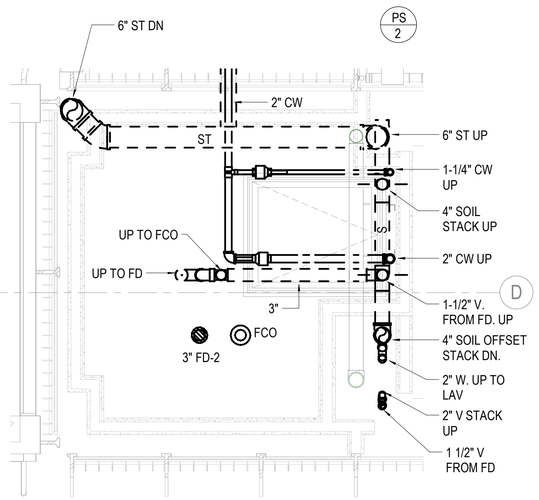

3 ENLARGED ABUTMENT MEZZANINE PLAN - SOUTH
1/2" = 1'-0"

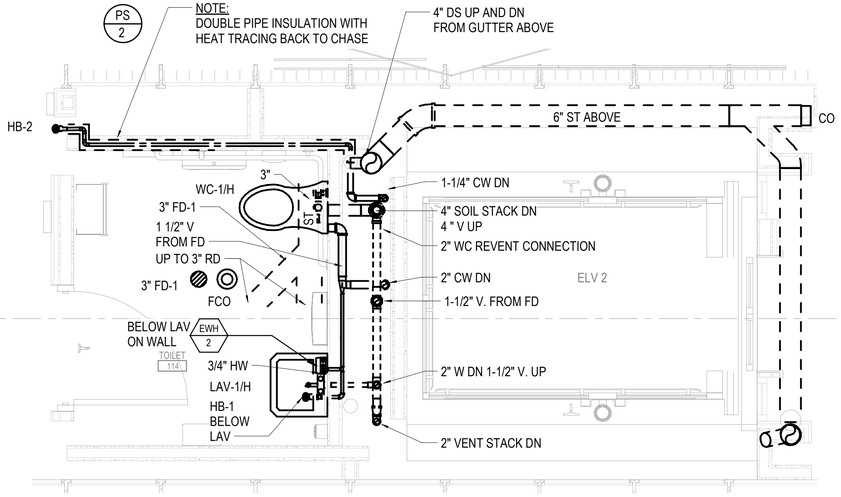

4 ENLARGED TOILET 114 PLAN - SOUTH
1/2" = 1'-0"

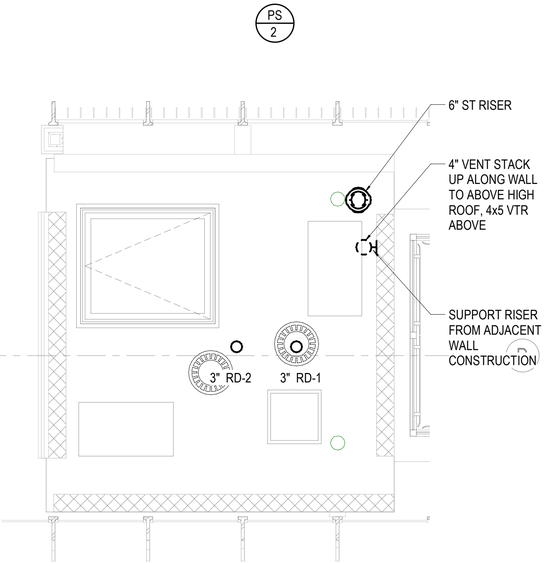

5 ENLARGED INTERMEDIATE ROOF PLAN - SOUTH
1/2" = 1'-0"

DESIGN BY:										
DRAWN BY:										
CHECKED BY:										
APPROVED BY:		1	7/3/2023	ISSUED FOR BID	GS	KG	MC			
CDOT/APPROVED BY:		NO.	DATE	REVISIONS	DES.	DRW.	CHK.	DCCO	CDOT	

TRANSYSTEMS
222 SOUTH RIVERSIDE PLAZA SUITE 610
CHICAGO, ILLINOIS 60606

SKIDMORE, OWINGS & MERRILL LLP
224 SOUTH MICHIGAN AVENUE, SUITE 1000
CHICAGO, ILLINOIS 60604

MILHOUSE ENGINEERING &
CONSTRUCTION INC
333 SOUTH WABASH AVENUE, SUITE 2901
CHICAGO, ILLINOIS 60604

EXP. 11/30/23
GEORGE E. ROUSE
062-055291
LICENSED
PROFESSIONAL
ENGINEER
OF
ILLINOIS

CHICAGO DEPARTMENT
OF TRANSPORTATION
DIVISION OF ENGINEERING

STATE / LAKE LOOP ELEVATED STATION
200 NORTH STATE STREET, CHICAGO, IL 60601

SPEC. NO.

ENLARGED ELEVATOR ELV2 PLUMBING PLANS - SOUTH

DRAWING NO.
P-403

CDOT PROJECT D-1-209

DATE: 9/9/2022

REVISION NO.1

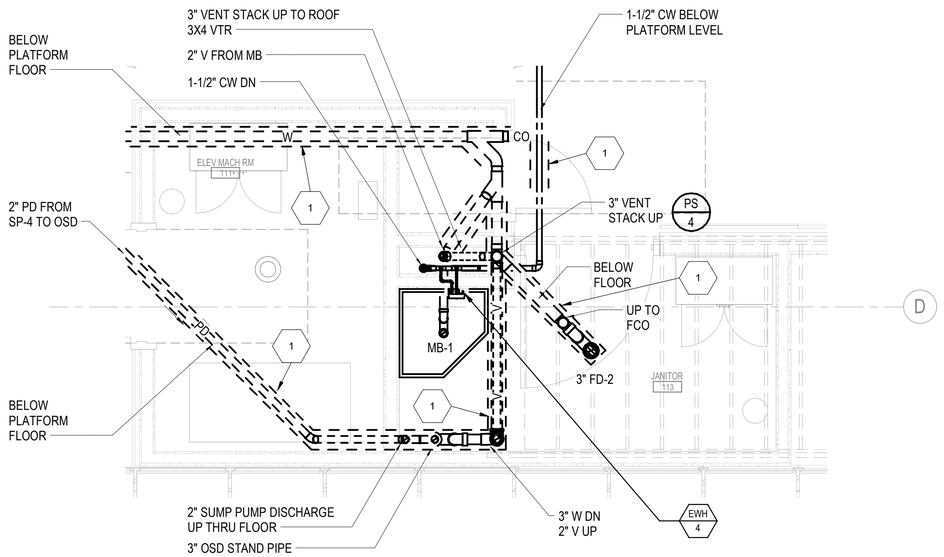

1 ENLARGED JANITOR CLOSET 113 PLAN - SOUTH
1/2" = 1'-0"

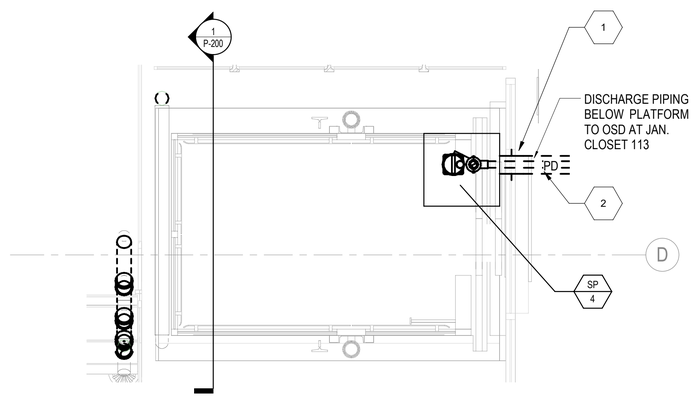

2 ENLARGED ELEVATOR ELV 4 PLAN - SOUTH
1/2" = 1'-0"

Keynote Legend

Key Value	Keynote Text
1	SUMP PUMP DISCHARGE, WASTE AND COLD WATER PIPING SHALL BE HEAT TRACED FROM DISCHARGE OF PUMP TO OPEN SITE DRAIN. PIPING SHALL BE INSULATED AND PROVIDED WITH REMOVABLE METAL JACKET.
2	PROVIDE PIPE SLEEVE IN CONCRETE WALL CONSTRCUTION FOR INSULATED PIPING.

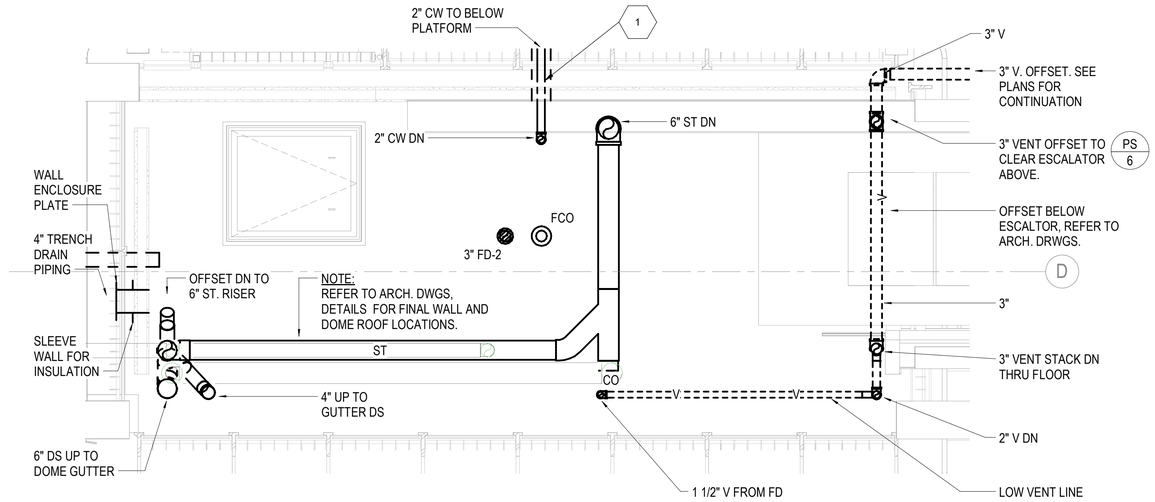

3 ENLARGED AREA PLAN ABOVE UTILITY ROOM 013 - SOUTH
1/2" = 1'-0"

DESIGN BY:										
DRAWN BY:										
CHECKED BY:										
APPROVED BY:		1	7/3/2023	ISSUED FOR BID	GS	KG	MC			
CDOT/APPROVED BY:		NO.	DATE	REVISIONS	DES.	DRW.	CHK.	DCCO	CDOT	

TRANSYSTEMS
222 SOUTH RIVERSIDE PLAZA SUITE 610
CHICAGO, ILLINOIS 60606

SKIDMORE, OWINGS & MERRILL LLP
224 SOUTH MICHIGAN AVENUE, SUITE 1000
CHICAGO, ILLINOIS 60604

MILHOUSE ENGINEERING & CONSTRUCTION INC
333 SOUTH WABASH AVENUE, SUITE 2901
CHICAGO, ILLINOIS 60604

EXP. 11/30/23
GEORGE E. BOURIS
062-055291
LICENSED PROFESSIONAL ENGINEER OF ILLINOIS

CHICAGO DEPARTMENT OF TRANSPORTATION
DIVISION OF ENGINEERING

STATE / LAKE LOOP ELEVATED STATION
200 NORTH STATE STREET, CHICAGO, IL 60601

SPEC. NO.

ENLARGED JANITOR CLOSET 113 PLUMBING PLANS - SOUTH

DRAWING NO.
P-404

CDOT PROJECT D-1-209

DATE: 9/9/2022

REVISION NO.1

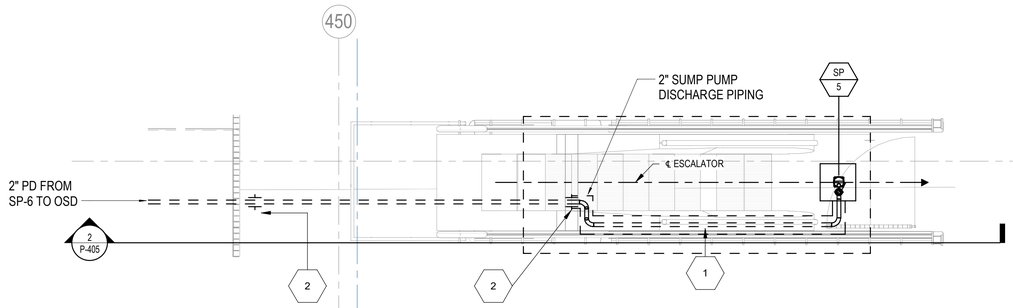

1 ESCALATOR 2 PLUMBING PLAN SOUTH
1/4" = 1'-0"

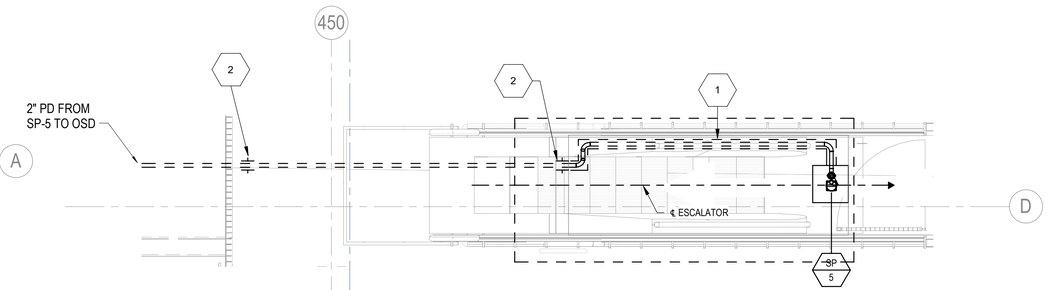

3 ESCALATOR 1 PLUMBING PLAN NORTH
1/4" = 1'-0"

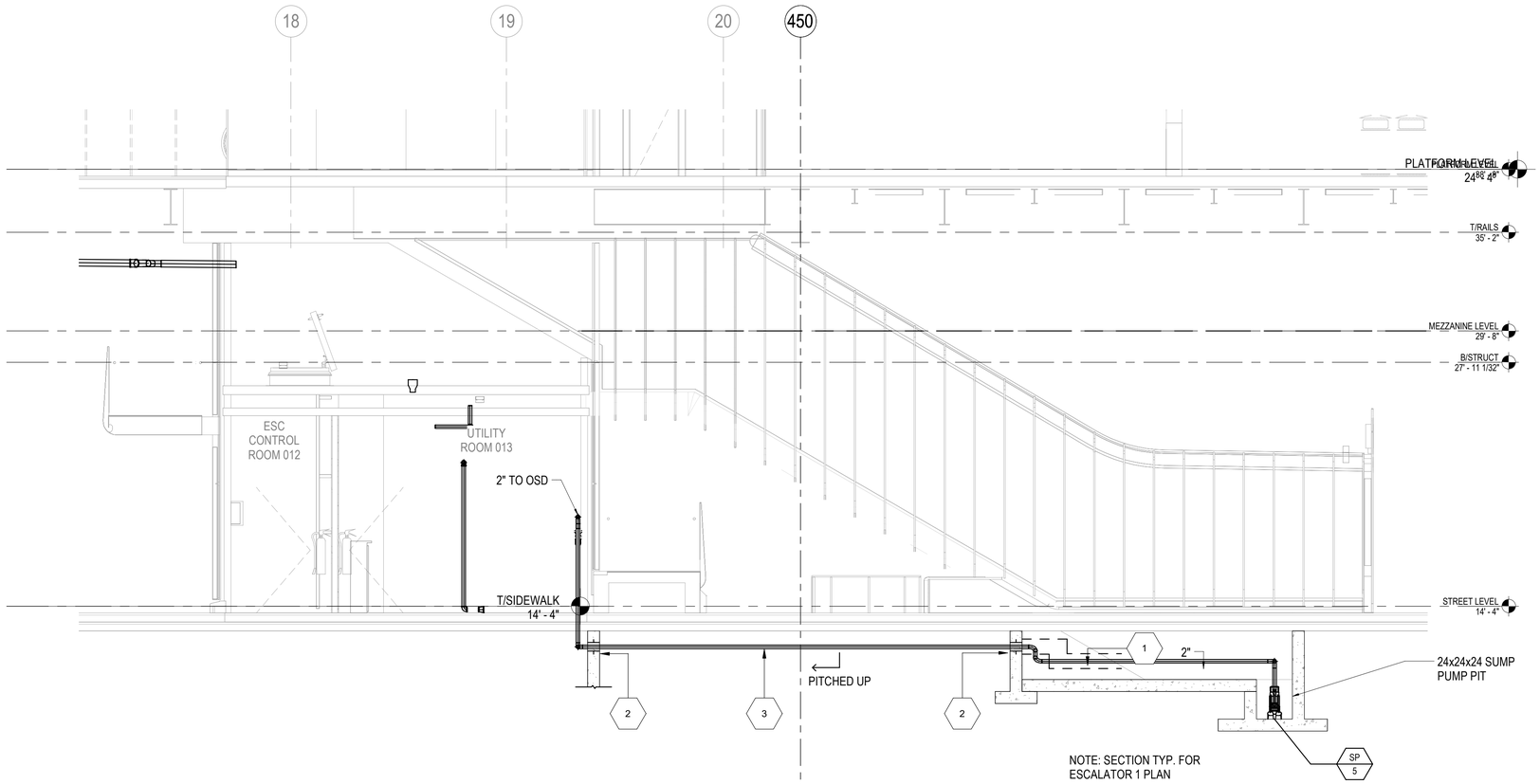

2 WEST/ EAST SECTION THROUGH ESCALATOR 2 SOUTH
1/4" = 1'-0"

Keynote Legend

Key Value	Keynote Text
1	SUMP PUMP DISCHARGE PIPING IN PIT BE HEAT TRACED FROM DISCHARGE OF PUMP TO OPEN SITE DRAIN LOCATION UTILITY ROOM. PIPING SHALL BE INSULATED AND PROVIDED WITH REMOVABLE METAL JACKET IN PIT AREA.
2	PROVIDE PIPE SLEEVE IN CONCRETE WALL CONSTRUCTION FOR NON-METALLIC CONDUIT FOR PIPING AND PUMP CONTROL CABLE CONDUIT. PROVIDE LINK-SEAL AT SLEEVE LOCATIONS.
3	PROVIDE NON-METALLIC UNDERGROUND CONDUIT OF SUFFICIENT DIAMETER FOR PIPING, INSULATION, WATER PROOF JACKET TO UTILITY ROOM.

DESIGN BY:										
DRAWN BY:										
CHECKED BY:										
APPROVED BY:		1	7/3/2023	ISSUED FOR BID	GS	KG	MC			
CDOT/APPROVED BY:		NO.	DATE	REVISIONS	DES.	DRW.	CHK.	DCCO	CDOT	

TRANSYSTEMS
222 SOUTH RIVERSIDE PLAZA SUITE 610
CHICAGO, ILLINOIS 60606

SKIDMORE, OWINGS & MERRILL LLP
224 SOUTH MICHIGAN AVENUE, SUITE 1000
CHICAGO, ILLINOIS 60604

MILHOUSE ENGINEERING & CONSTRUCTION INC
333 SOUTH WABASH AVENUE, SUITE 2901
CHICAGO, ILLINOIS 60604

EXP. 11/30/23
GEORGE E. BOURIS
062-055291
LICENSED PROFESSIONAL ENGINEER OF ILLINOIS

CHICAGO DEPARTMENT OF TRANSPORTATION
DIVISION OF ENGINEERING

STATE / LAKE LOOP ELEVATED STATION
200 NORTH STATE STREET, CHICAGO, IL 60601

SPEC. NO.

ESCALATOR 1 AND 2 PLUMBING PLAN AND DETAILS

DRAWING NO.
P-405

CDOT PROJECT D-1-209 | DATE: 9/9/2022 | REVISION NO. 1

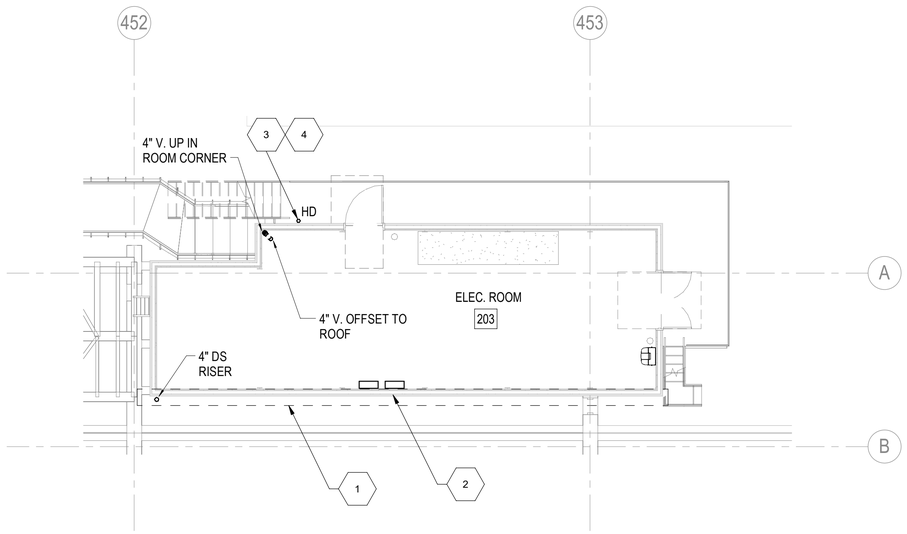

1 PLUMBING MEZZANINE PLAN-ELEC. ROOM 203 - NORTH
1/8" = 1'-0"

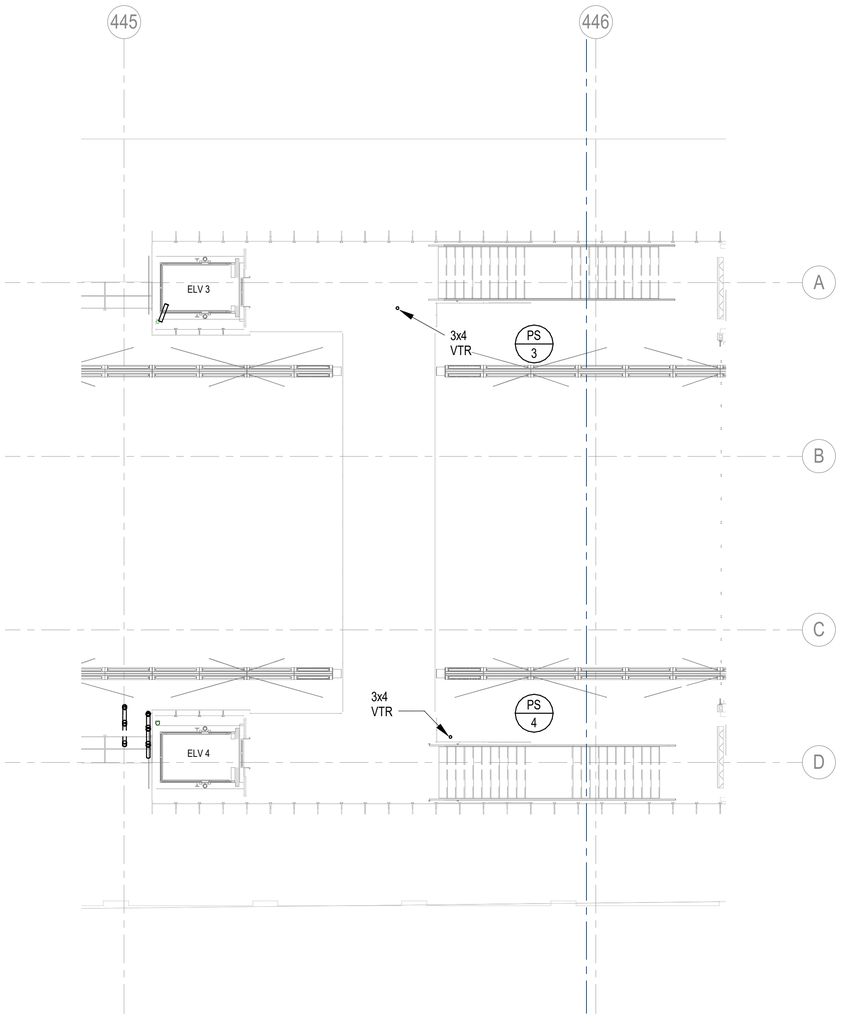

3 PLUMBING FLYOVER LEVEL PLAN
1/8" = 1'-0"

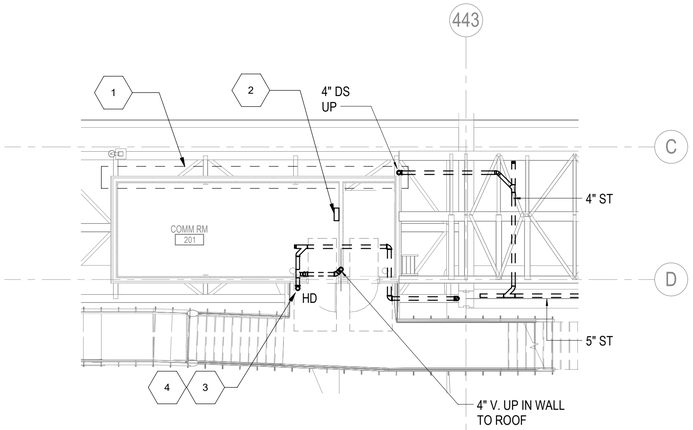

2 PLUMBING MEZZANINE PLAN-COMM. ROOM 201 - SOUTH
1/8" = 1'-0"

Keynote Legend

Key Value	Keynote Text
1	PROVIDE SELF REGULATING HEAT TRACING CABLES IN ROOF GUTTERS AND PERTINENT DOWN SPOUTS WITH ALL PERTINENT SYSTEM/ZONE CONTROLS.
2	PROVIDE ZONE CONTROL HEAT TRACING SYSTEM PANELS (MULTIPLE AS REQUIRED) IN ROOM. COORDINATE FINAL ROOM LOCATIONS WITH DIV. 26 CONTRACTOR.
3	PROVIDE HUB DRAIN WITH S.S. GRATE INSERT AT WALKWAY PLATFORM. SET HUB ABOVE PLATFORM WITH 4" PIPE THRU PLATFORM STRUCTURE.
4	HUB DRAIN INSTALLATION SHALL BE INSTALLED CLOSE TO WALL AWAY FROM PATH OF FOOT TRAFFIC. PROVIDE GAURD WITH MARKINGS AT LOCATION FOR SAFETY/PROTECTION.

DESIGN BY:									
DRAWN BY:									
CHECKED BY:									
APPROVED BY:		1	7/3/2023	ISSUED FOR BID	GS	KG	MC		
CDOT/APPROVED BY:		NO.	DATE	REVISIONS	DES.	DRW.	CHK.	DCCO	CDOT

TRANSYSTEMS
222 SOUTH RIVERSIDE PLAZA SUITE 610
CHICAGO, ILLINOIS 60606

SKIDMORE, OWINGS & MERRILL LLP
224 SOUTH MICHIGAN AVENUE, SUITE 1000
CHICAGO, ILLINOIS 60604

MILHOUSE ENGINEERING & CONSTRUCTION INC
333 SOUTH WABASH AVENUE, SUITE 2901
CHICAGO, ILLINOIS 60604

EXP. 11/30/23
GEORGE E. BOURIS
062-055291
LICENSED PROFESSIONAL ENGINEER OF ILLINOIS

CHICAGO DEPARTMENT OF TRANSPORTATION
DIVISION OF ENGINEERING

STATE / LAKE LOOP ELEVATED STATION
200 NORTH STATE STREET, CHICAGO, IL 60601

ENLARGED ELECTRIC/COMMUNICATION ROOM PLANS

CDOT PROJECT D-1-209 | DATE: 9/9/2022

SPEC. NO.

DRAWING NO. P-406

REVISION NO.1

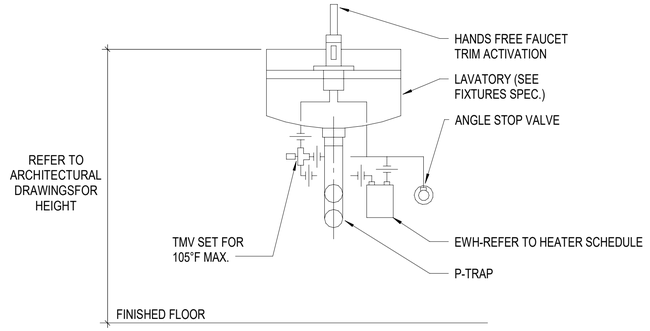

1 POINT OF USE WATER HEATER (UNDER LAVATORY) DETAIL

NTS

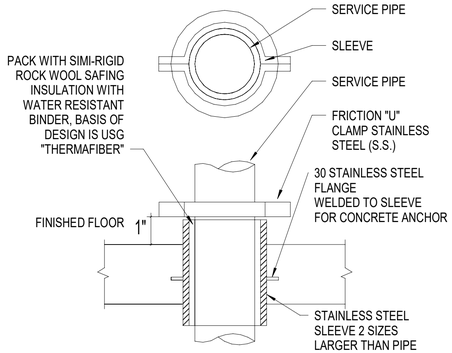

2 RISER SLEEVE DETAIL

NTS

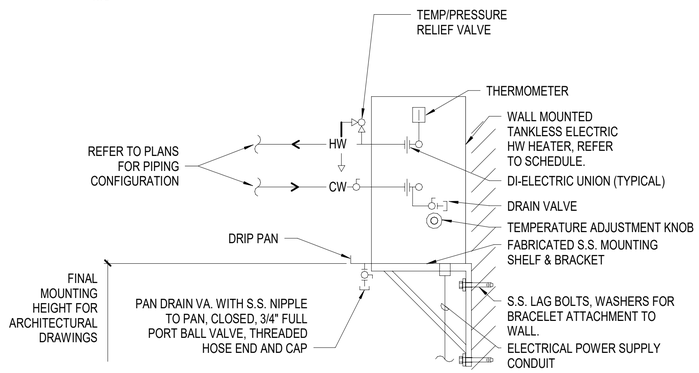

3 WALL MOUNTED ELECTRIC WATER HEATER DETAIL IN JANITOR'S CLOSET

NTS

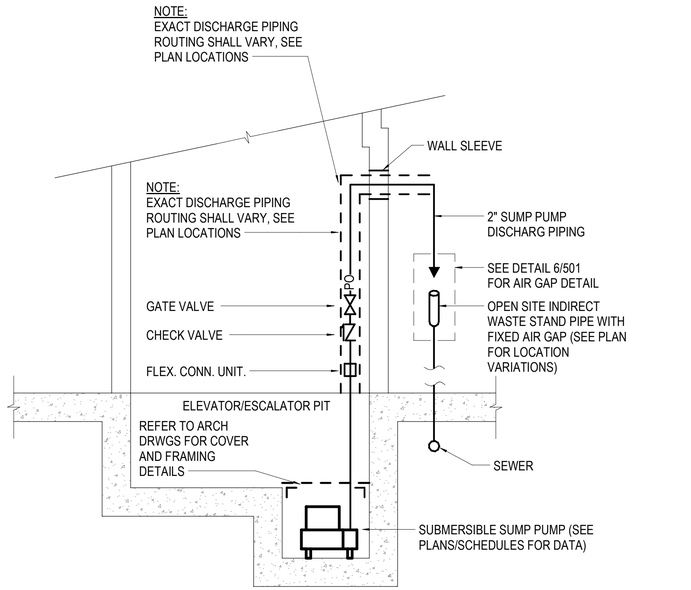

4 ELEVATOR/ESCALATOR SUMP PUMP DIAGRAM/DETAIL

NTS

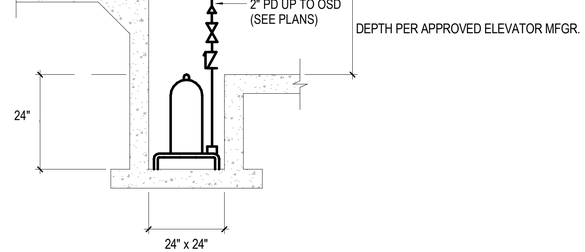

5 SUMP PUMP PIT DETAIL

NTS

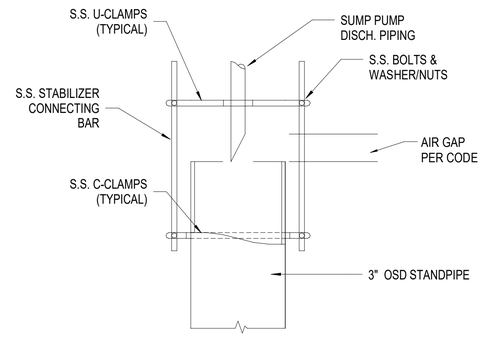

6 OSD AIR GAP DETAIL

NTS

DESIGN BY:										
DRAWN BY:										
CHECKED BY:										
APPROVED BY:		1	7/3/2023	ISSUED FOR BID	GS	BF	MC			
CDOT/APPROVED BY:		NO.	DATE	REVISIONS	DES.	DRW.	CHK.	DCCO	CDOT	

TRANSYSTEMS
222 SOUTH RIVERSIDE PLAZA SUITE 610
CHICAGO, ILLINOIS 60606

SKIDMORE, OWINGS & MERRILL LLP
224 SOUTH MICHIGAN AVENUE, SUITE 1000
CHICAGO, ILLINOIS 60604

MILHOUSE ENGINEERING & CONSTRUCTION INC
333 SOUTH WABASH AVENUE, SUITE 2901
CHICAGO, ILLINOIS 60604

Exp. 11/30/23
GEORGE E. BOURNIAS
062-055291
LICENSED PROFESSIONAL ENGINEER OF ILLINOIS

CHICAGO DEPARTMENT OF TRANSPORTATION
DIVISION OF ENGINEERING

STATE / LAKE LOOP ELEVATED STATION
200 NORTH STATE STREET, CHICAGO, IL 60601

SPEC. NO.

PLUMBING DETAILS

DRAWING NO.
P-501

CDOT PROJECT D-1-209

DATE: 9/9/2022

REVISION NO.1

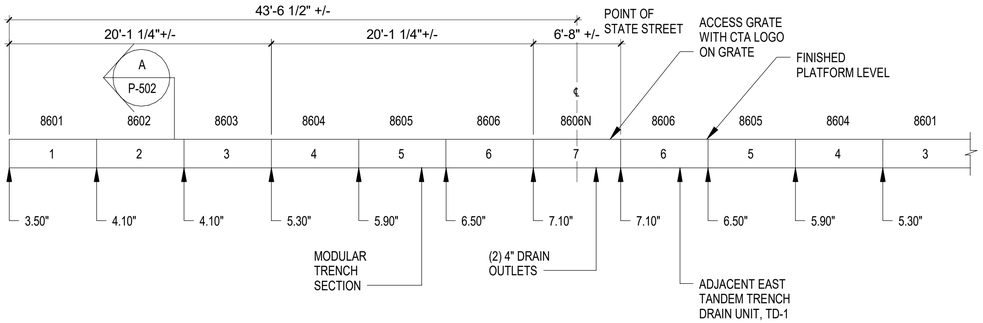

1 TRENCH DRAIN (TD-1) PROFILE ELEVATION DETAIL

NTS

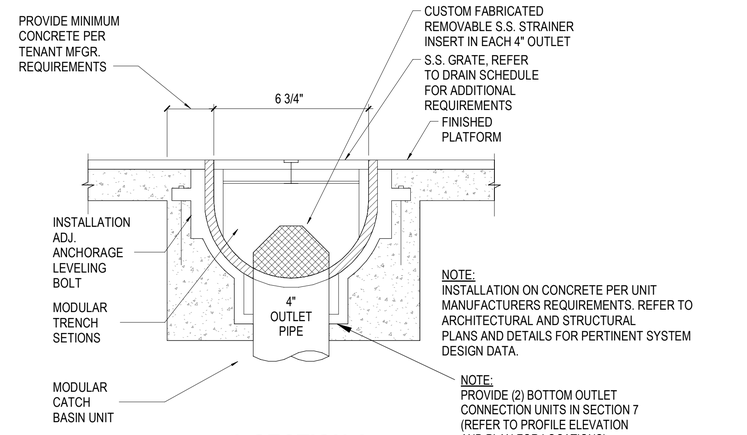

2 SECTION A

NTS

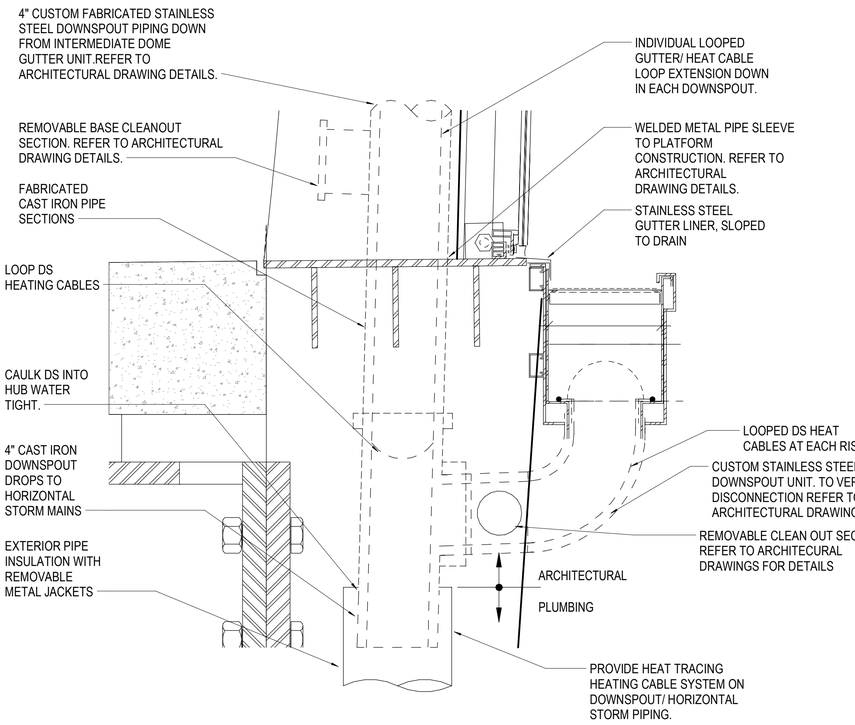

3 PERIMETER GUTTER DOWNSPOUT DETAIL

3" = 1'-0"

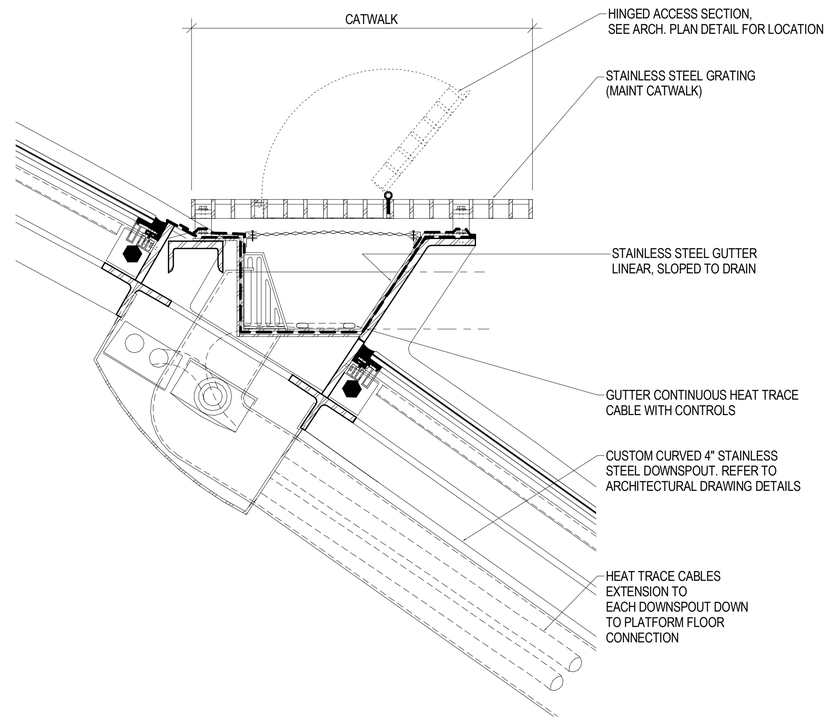

NOTE: REFER TO ARCHITECTURAL PLANS AND DETAILS FOR PERTINENT SYSTEM DESIGN DATA.

4 INTERMEDIATE DOME GUTTER DOWNSPOUT DETAIL

3" = 1'-0"

DESIGN BY:									
DRAWN BY:									
CHECKED BY:									
APPROVED BY:		1	7/3/2023	ISSUED FOR BID	GS	BF	MC		
CDOT/APPROVED BY:		NO.	DATE	REVISIONS	DES.	DRW.	CHK.	DCCO	CDOT

TRANSYSTEMS
222 SOUTH RIVERSIDE PLAZA SUITE 610
CHICAGO, ILLINOIS 60606

SKIDMORE, OWINGS & MERRILL LLP
224 SOUTH MICHIGAN AVENUE, SUITE 1000
CHICAGO, ILLINOIS 60604

MILHOUSE ENGINEERING & CONSTRUCTION INC
333 SOUTH WABASH AVENUE, SUITE 2901
CHICAGO, ILLINOIS 60604

EXP. 11/30/23
GEORGE E. BOURAS
062-055291
LICENSED PROFESSIONAL ENGINEER OF ILLINOIS

CHICAGO DEPARTMENT OF TRANSPORTATION
DIVISION OF ENGINEERING

STATE / LAKE LOOP ELEVATED STATION
200 NORTH STATE STREET, CHICAGO, IL 60601

PLUMBING GUTTER/DOWNSPOUT DETAILS

CDOT PROJECT D-1-209

DATE: 9/9/2022

SPEC. NO.

DRAWING NO. P-502

REVISION NO.1

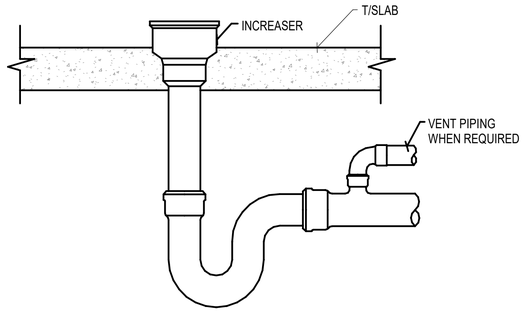

1 HUB DRAIN DETAIL
NOT TO SCALE

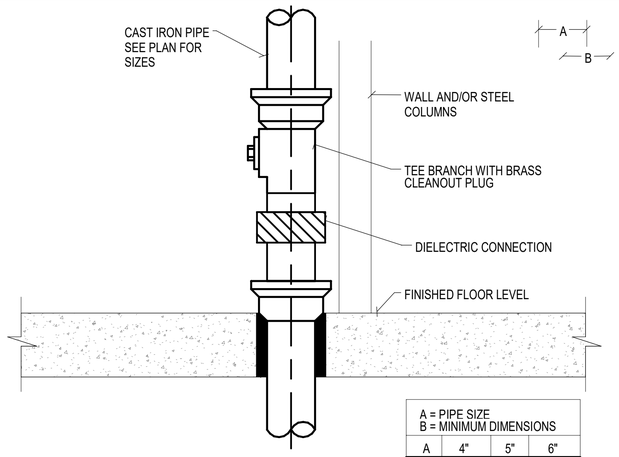

A = PIPE SIZE
B = MINIMUM DIMENSIONS

A	4"	5"	6"
B	3 1/2"	4"	4 1/2"

2 CLEANOUT - BASE OF STACK/RISERS
NOT TO SCALE

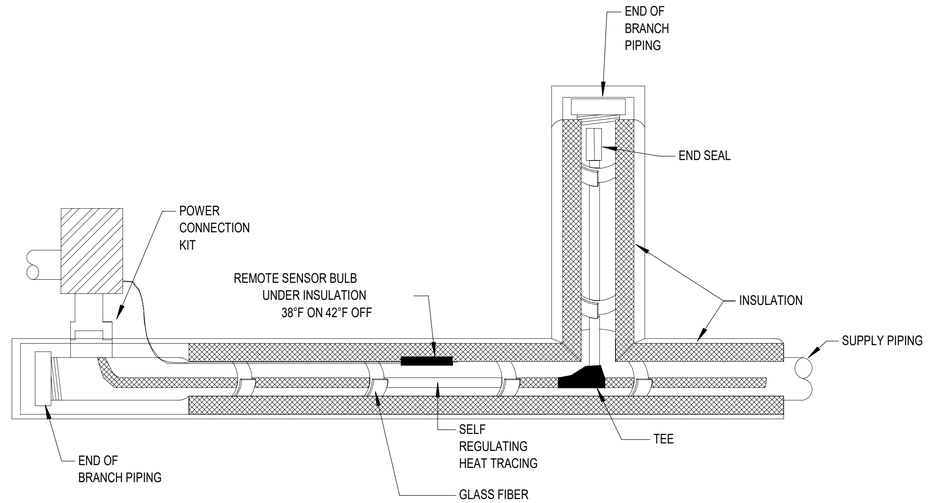

3 HEAT TRACE FOR PIPING
NOT TO SCALE

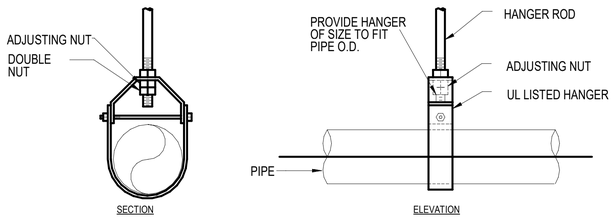

PROVIDE COPPER HANGERS FOR COPPER PIPING.

UN-INSULATED PIPE

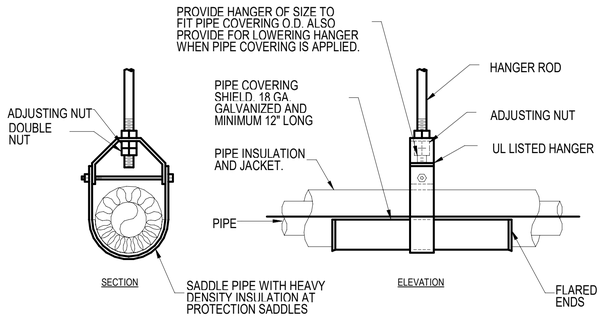

INSULATED PIPE

4 PIPE HANGER DETAIL
NOT TO SCALE

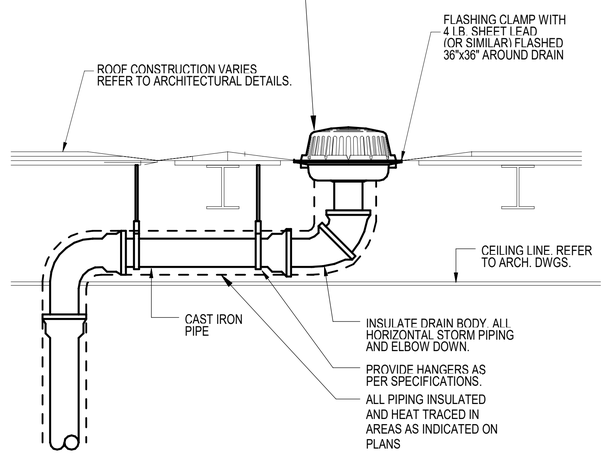

5 ROOF DRAIN PIPING DETAIL
NOT TO SCALE

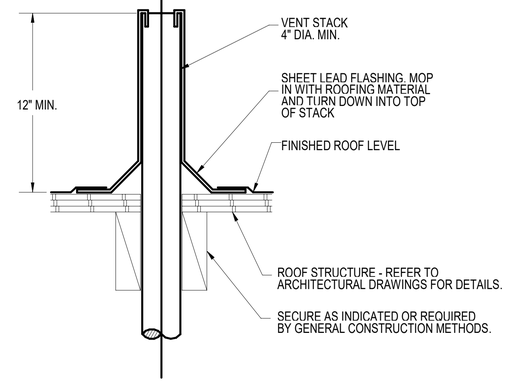

DESIGNER NOTES:

IF YOU USE THIS DETAIL VERIFY THE TYPE OF ROOFING MATERIAL, AS YOU MAY USE THE SAME MATERIAL, IF APPLICABLE FOR FLASHING AT VENT THROUGH ROOF.

6 VENT THRU ROOF DETAIL
NOT TO SCALE

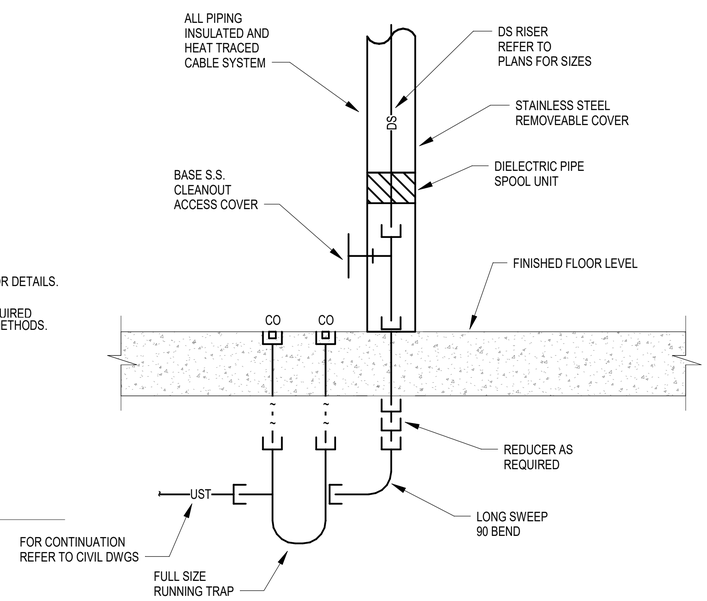

7 DOWNSPOUT RISER RUNNING TRAP DETAIL
NOT TO SCALE

DESIGN BY:									
DRAWN BY:									
CHECKED BY:									
APPROVED BY:		1	7/3/2023	ISSUED FOR BID	GS	BF	MC		
CDOT/APPROVED BY:		NO.	DATE	REVISIONS	DES.	DRW.	CHK.	DCCO	CDOT

TRANSYSTEMS
222 SOUTH RIVERSIDE PLAZA SUITE 610
CHICAGO, ILLINOIS 60606

SKIDMORE, OWINGS & MERRILL LLP
224 SOUTH MICHIGAN AVENUE, SUITE 1000
CHICAGO, ILLINOIS 60604

MILHOUSE ENGINEERING & CONSTRUCTION INC
333 SOUTH WABASH AVENUE, SUITE 2901
CHICAGO, ILLINOIS 60604

Exp. 11/30/23
GEORGE E. BOURNIAS
062-055291
LICENSED PROFESSIONAL ENGINEER OF ILLINOIS

CHICAGO DEPARTMENT OF TRANSPORTATION
DIVISION OF ENGINEERING

STATE / LAKE LOOP ELEVATED STATION
200 NORTH STATE STREET, CHICAGO, IL 60601

PLUMBING DETAILS

CDOT PROJECT D-1-209

DATE: 9/9/2022

SPEC. NO.

DRAWING NO.
P-503

REVISION NO.1

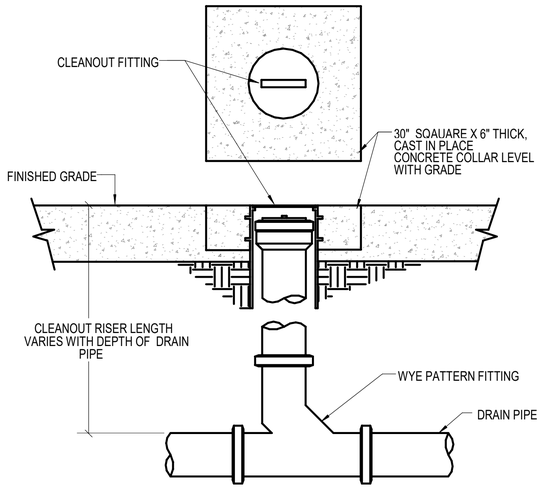

NOTE:
DO NOT USE THIS DETAIL FOR UNPAVED AREAS.

1 CLEANOUT - YARD PAVED AREAS
NOT TO SCALE

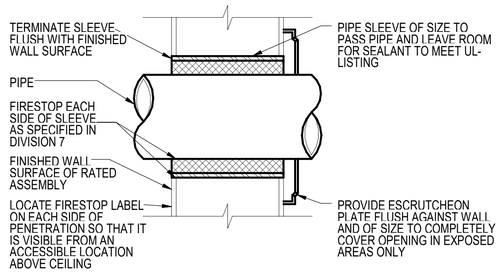

GENERAL NOTE:
INCLUDES FIRE WALLS, FIRE BARRIERS, SMOKE BARRIERS, AND FIRE PARTITIONS.

2 PIPING INSULATED/UNINSULATED THROUGH INTERIOR FIRE RATED WALLS
NOT TO SCALE

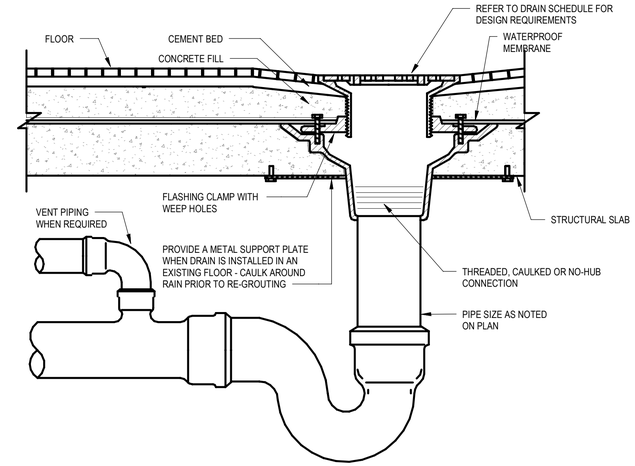

3 TYPICAL FLOOR DRAIN
NOT TO SCALE

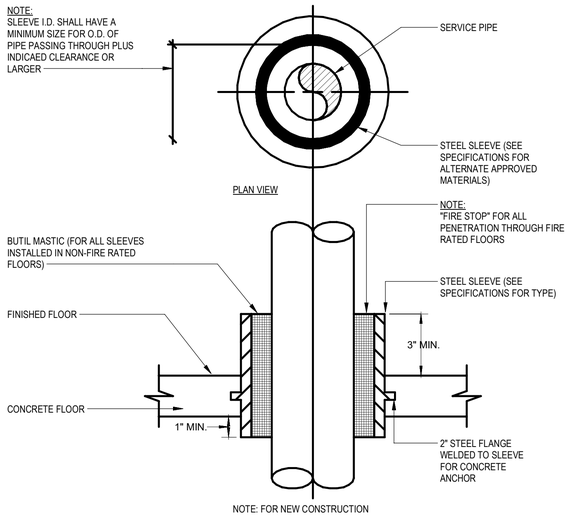

4 FLOOR PIPE SLEEVE DETAIL
NOT TO SCALE

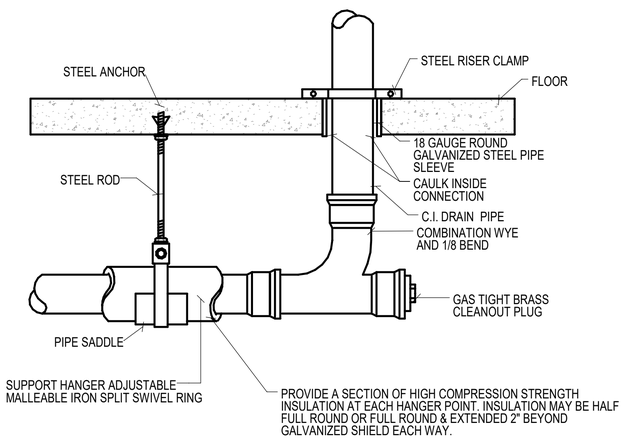

5 CLEANOUT FOR SUSPENDED STORM AND DRAIN PIPING
NOT TO SCALE

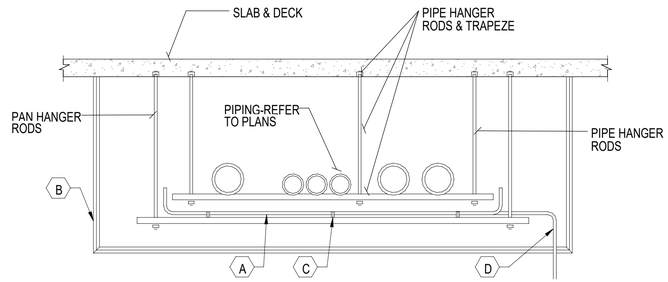

A — 20 GAUGE STAINLESS STEEL SHEETMETAL PAN WITH 2" UPTURNED EDGES. HUNG TO WITHIN 1" OF BOTTOM OF PIPE HANGER RODS.

B — RATED GENERAL CONSTRUCTION ENCLOSURE WHERE PIPING IS ABOVE ELECTRICAL ROOMS OR STAIRWELL ACCESS.

C — STIFFENERS FOR ANY PAN THAT IS OVER 12" WIDE IN ANY DIRECTION.

D — PITCH PAN WITH PIPE SLOPE. INCLUDE 1" ⌀ TELLTALE. TELLTALE TO SPILL INTO HUB DRAIN IN MECHANICAL ROOM.

NOTE:
FOR CLEVIS HANGER MULTIPLE PIPING APPLICATIONS MAINTAIN FLAT PITCHED PAN CONFIGURATION.

6 DRAIN PAN FOR PIPING
NOT TO SCALE

DESIGN BY:										
DRAWN BY:										
CHECKED BY:										
APPROVED BY:		1	7/3/2023	ISSUED FOR BID	GS	BF	MC			
CDOT/APPROVED BY:		NO.	DATE	REVISIONS	DES.	DRW.	CHK.	DCCO	CDOT	

TRANSYSTEMS
222 SOUTH RIVERSIDE PLAZA SUITE 610
CHICAGO, ILLINOIS 60606

SKIDMORE, OWINGS & MERRILL LLP
224 SOUTH MICHIGAN AVENUE, SUITE 1000
CHICAGO, ILLINOIS 60604

MILHOUSE ENGINEERING & CONSTRUCTION INC
333 SOUTH WABASH AVENUE, SUITE 2901
CHICAGO, ILLINOIS 60604

EXP. 11/30/23
GEORGE E. BOURNIAS
062-055291
LICENSED PROFESSIONAL ENGINEER OF ILLINOIS

CHICAGO DEPARTMENT OF TRANSPORTATION
DIVISION OF ENGINEERING

STATE / LAKE LOOP ELEVATED STATION
200 NORTH STATE STREET, CHICAGO, IL 60601

PLUMBING DETAILS

CDOT PROJECT D-1-209

DATE: 9/9/2022

SPEC. NO.

DRAWING NO. P-504

REVISION NO.1

DOMESTIC WATER BOOSTER PUMP SCHEDULE

TAG	LOCATION	PUMP CAPACITY	TOTAL CAPACITY (GPM)	MIN. SUCTION (PSI)	DISHARGE PRESSURE PSI/FEET	EACH PUMP CAPACITY	ELECTRICAL DATA					DESIGN MANUFACTION	MODEL	UNIT WGT. LBS	REMARKS
							HP	RPM MOTOR	VOLTS	PHASE	HEATER				
DBP-1	UTILITY ROOM 003 NORTH	38 GPM	38	25	70/161.7	38	2	-	208	3	60	METROPLOITAN METRO-VARIPAC SYSTEM 2100	MS-MT111-25-PHI-70 SYMPLEX VSD	-	1 TO 5
DBP-2	UTILITY ROOM 013 SOUTH	38 GPM	38	25	70/161.7	38	2	-	208	3	60	METROPLOITAN METRO-VARIPAC SYSTEM 2100	MS-MT111-25-PHI-70 SYMPLEX VSD	-	1 TO 5

REMARKS:

1. PACKAGE UNIT SHALL BE FULLY MOUNTED ON SKID WITH SYSTEM COMPONENTS, INCLUDING HEADERS, PUMPS METROTECH-III/MICRO 820 LOGIC PANEL WITH PROGRAMMABLE CONTAINER, 7" DIAGONAL TOUCH SCREEN OPERATOR INTERFACE.
2. SCREEN SHALL SHOW STATUS AND PROVIDE ENTRY SET-POINTS AND COMMANDS, INDICATE ALL AND ABLE AND VISUAL ALARMS, WITH REMOTE ALARM CONTRACTS FOR HIGH SYSTEM PRESSURE, LOW SYSTEM PRESSURE, LOW SUCTION PRESSURE, COMMS ALARM, IN ADDITION PROVIDE WITH A BACNET CARD FOR CONNECTION TO BUILDING AUTOMATION SYSTEM OF CTA.
3. PUMP SKID INCLUDE VARIABLE SPEED CONTROLLER, GAUGES, DISCONNECT ENCLOSURE, BUTTERFLY VALVES, AND ALL PERTINENT SYSTEM 2" PIPING, DEVICES FOR A COMPLETE PRE-PACKAGE SYSTEM.
4. PROVIDE 87 GALLON CAPACITY, PER CHARGE HYDRO-PNEUMATIC VERTICAL TANK (24"DIAMETER X 62"HIGH), WEIGHT 104 LBS, MODEL CPV-87TC.
5. PUMP MOTOR SHALL BE TEFC-ENCLOSURE, 1.15 SERVICE FACTOR, HIGH EFFICIENCY TYPE FOR SYSTEM DESIGN INDICATED IN SCHEDULE.

PLUMBING FIXTURE SCHEDULE

TAG	DESCRIPTION	FLOW RATE	MOUNTING HEIGHT	MANUFACTURER	MODEL NUMBER	FIXTURE QAUNTITY	REMARKS
WC-1/H	WALL HUNG, VITREOUS CHINA, WHITE, ADA HANDICAPPED, ENLOGATED BOWL, FLUSH VALVE, TOP SPUD	1.6 GPF	17-19" ADA HGT.	AMERICAN STANDARD	2257.101	2	4,5
LAV-1/H	WALL HUNG, VITREOUS CHINA, WHITE, 20"X18", 4" BACK, 4" CENTER SET, HANDS FREE OPERATION	-	ADA HGT. REFER TO ARCH. DRWGS	AMERICAN STANDARD	356.421	2	1,2
MB-1	PRE-CAST TERRAZZO, FLOOR MOUNTED, 32"X32"X12", 3" OUTLET	-	-	FIAT	SB3232501	2	3

REMARKS:

1. CENTER SET -SLOAN MODEL ETF-600, HANDS FREE, CONTROL MODULE, THERMOSTATIC MIXING VALVE, ELECTRONIC FAUCET, CHAIR CARRIER WITH CONCEALED ARM SUPPORTS.
2. PROVIDE OFFSET GRID DRAIN, P-TRAP ASSEMBLY, PRO.FLOW TRAP AND SUPPLY FITTINGS COVERS, (2) STOP VALVES WITH FLEXIBLE RISERS.
3. 3-SIDE STAINLESS EDGES, CHICAGO FAUCET MODEL 911-15 CP FAUCET WITH ELEVATED VACUUM BREAKER AT 7'-6" ABOVE FLOOR.
4. PROVIDE SLAON-ROYAL "OPTIMA", ROYAL, MODEL 111-1.6 ES-5 TMO, HANDS FREE AUTOMATIC OPERATION; CHAIR CARRIER.
5. PROVIDE AMERICAN STANDARD, MODEL 5901.110T, WHITE SEAT WITH SELF SUSTAINING STAINLESS STEEL HINGE, EVER-CLEAN SURFACE SOLID PROPYLENE CONSTRUCTION.

THERMOSTATIC MIXING VALVE SCHEDULE

TAG	LOCATION	QTY	FIXTURE TYPE	OUTLET TEMP. (°F)	FLOW @ AP (GPM @ PSI)	MIN. FLOW (GPM)	MANUFACTURER	MODEL NUMBER	REMARKS
TMV-1	TOILET ROOMS 104/114	2	THERMOSTATIC MIXING VALVE	105°	0.5@1.7	0.25	LEONARD	170-LF	1

REMARKS:

1. INSTALL AT FIXTURE WITH LOCKING ADJUSTMENT KNOB. PROVIDE CHECK VALVE A CW AND HW SUPPLY INLETS, LEAD FREE BRASS BODY CONSTRUCTION.

HOSE BIBB SCHEDULE

TAG	NAME	FLOW GPM	LOCATION	QTY	MANUFACTURER	MOPEL	DESCRIPTION
HB-1	HOSE BIBB	5	TOILET/JANITOR CLOSET ROOMS		J.R.SMITH	5609QT	FLUSH-IN INSTALLATION, KEY OPERATED, INTEGRAL VACUUM BREAKER, 3/4" HOSE END, CHROME PLATED
HB-2	HOSE BIBB	5	PLATFORM LEVEL		J.R.SMITH	5509QT	STAINLESS STEEL BOX, NON-FREEZE, INTEGRAL VACUUM BREAKER, KEY OPERATED, 3/4" HOSE END

ELECTRIC DOMESTIC WATER HEATER SCHEDULE

TAG	LOCATION	HEATER TYPE	DESCRIPTION	GPM	DESIGN BASIS MANUFACTURER	MODEL	ELECTRICAL DATA					REMARKS
							KW/WATTS	AMPS	VOLTAGE	PHASE	HERTZ	
EWH-1	TOILET ROOM 104 NORTH	SINGLE POINT OF USE	ELECTRIC TANKLESS INSTANT FLOW, C-MICRO, LOW ACTIVATION, ADJUSTMENT TEMP. 104°-125° F	0.5 AT 49° TEMP. RISE	CHRONOMITE LAB., INC.	CM-30L	3.6/3600	30	120	1	60	HIGH POLISH FINISH STAINLESS STEEL (SSP), AMP 1,2,4
EWH-2	TOILET ROOM 114 SOUTH	SINGLE POINT OF USE	DITTO	DITTO	CHRONOMITE LAB., INC.	CM-30L	3.6/3600	30	120	1	60	HIGH POLISH FINISH STAINLESS STEEL (SSP), AMP 1,2,4
EWH-3	JANITORS CLOSET 103 NORTH	SINGLE POINT OF USE	ELECTRIC TANKLESS, MIGHTY MITE, LOW ACTIVATION, ADJUSTMENT TEMP. 104°-125° F	3.00 AT 57° TEMP. RISE	CHRONOMITE LAB., INC.	ER-120/208 3P	15.6/15,600	69	208	3	60	HIGH POLISH FINISH STAINLESS STEEL (SSP), AMP 1,2,3,4
EWH-4	JANITORS CLOSET 113 SOUTH	SINGLE POINT OF USE	DITTO	DITTO	CHRONOMITE LAB., INC.	ER-120/208 3P	15.6/15,600	69	208	3	60	HIGH POLISH FINISH STAINLESS STEEL (SSP), AMP 1,2,3,4

REMARKS:

1. PROVIDE WALL MOUNTING WITH 316 STAINLESS STEEL FASTENERS AS REQUIRED TO WALL.
2. PROVIDE ALL SAFETY DEVICES AS REQUIRED BY CODE.
3. MOUNT BUTTON OF UNIT MINIMUM OF 7'-6" ABOVE FLOOR, LOCATE TO SIDE OF MOP BASIN AS SHOWN.
4. PROVIDE COMPATIBLE STAINLESS STEEL BRAIDED FLEXIBLE HOSE BETWEEN UNIT AND WALL/FIXTURE CONNECTIONS.

PLUMBING PIPING MATERIALS SCHEDULE

PIPING DIAGRAM	TYPE PIPING	JOINT TYPE	FITTING TYPE	REMARKS
UNDER GROUND SANITARY WASTE AND VENT SIZE: 3" AND LARGER	EXTRA HEAVY CAST IRON SOIL PIPE (ASTM A-74,888,C15P1-301)	HUB & SPIGOT W/NEOPRENE GASKET JOINTS PRESS-ON	HUB & SPIGOT EXTRA HEAVY CAST IRON DRAINAGE TYPE (AWWA C110/A21.10)	
ABOVE GROUND/SUSPENDED SANITARY WASTE AND VENT SIZE: 3" AND LARGER	SERVICE CLASS CAST IRON SOIL PIPE	HUB & SPIGOT LEAD AND OAKUM CAULKED JOINTS	HUB & SPIGOT SERVICE WEIGHT CAST IRON DRAINAGE TYPE (ASTM B16.4, ASTM B16.12, ASTM A74, ASTM A 888, C15P1301)	
ABOVE GROUND/SUSPENDED SANITARY WASTE AND VENT SIZE: 2 1/2" AND LESS	COPPER TYPE DWV TUBE (ASTM B75,88,251,306)	SOLDERED TYPE	COPPER DRAINAGE TYPE FITTINGS CAST OR WROUGHT (ASTM B16.15,18,22,23,26,29)	
UNDERGROUND STORM PIPING SIZE: 4" AND LARGER	EXTRA HEAVY CAST IRON SOIL PIPE (ASTM A-74,888,C15P1-301)	HUB & SPIGOT W/NEOPRENE GASKET JOINTS PRESS-ON	HUB & SPIGOT EXTRA HEAVY CAST IRON DRAINAGE TYPE	
ABOVE GROUND/SUSPENDED STORM PIPING SIZE: 3" AND LARGER	SERVICE CLASS CAST IRON SOIL PIPE	HUB & SPIGOT LEAD AND OAKUM CAULKED JOINTS	HUB & SPIGOT SERVICE WEIGHT CAST IRON DRAINAGE TYPE	
UNDERGROUND DOMESTIC COLD WATER SIZE: 3" AND LARGER	DUCTILE CAST IRON PIPE CLASS 2 TO 6 AS REQUIRED (CEMENT LINED)	MECHANICAL JOINT OR PUSH-ON TYPE JOINT WITH RUBBER GASKET	COMPOTIBLE DUCTILE IRON (AWWA C110, AWWA C153)	
UNDERGROUND DOMESTIC COLD WATER SIZE: 2" AND SMALLER	COPPER OR COPPER ALLOY TUBING (TYPE K,L)(ASTM B75, B88, B251, B447)	BRAZED JOINTS	WROT AND CAST PRESSURE PIPE FITTINGS (ASSE 1061, ASME B16.15,18,22,23,26,29)	
ABOVE GROUND/SUSPENDED DOMESTIC COLD WATER SIZE: 4" AND SMALLER	COPPER OR COPPER ALLOY TUBING (TYPE K,L)	SOLDERED JOINTS 95-5, TIN-ANTIMONY (ANSI/ASTM B32) ALLOY GRADE 95TA	WROT AND CAST PRESSURE PIPE SOCKET FITTINGS	
ABOVE GROUND/SUSPENDED DOMESTIC HOT WATER SIZE: 1/2" AND LARGER	COPPER OR COPPER ALLOY TUBING (TYPE K,L)	SOLDERED JOINTS 95-5, TIN-ANTIMONY (ANSI/ASTM B32) ALLOY GRADE 95TA	WROT AND CAST PRESSURE PIPE SOCKET FITTINGS	
ABOVE GROUND SUMP PUMP DISCHARGE SIZE: 1 1/4" AND LARGER	COPPER OR COPPER ALLOY TUBING (TYPE K,L)	BRAZED JOINTS	COPPER DRAINAGE TYPE FITTINGS CAST OR WROUGHT	

DESIGN BY:										
DRAWN BY:										
CHECKED BY:										
APPROVED BY:		1	7/3/2023	ISSUED FOR BID	GS	BF	MC			
CDOT/APPROVED BY:		NO.	DATE	REVISIONS	DES.	DRW.	CHK.	DCCO	CDOT	

TRANSYSTEMS
222 SOUTH RIVERSIDE PLAZA SUITE 610
CHICAGO, ILLINOIS 60606

SKIDMORE, OWINGS & MERRILL LLP
224 SOUTH MICHIGAN AVENUE, SUITE 1000
CHICAGO, ILLINOIS 60604

MILHOUSE ENGINEERING & CONSTRUCTION INC
333 SOUTH WABASH AVENUE, SUITE 2901
CHICAGO, ILLINOIS 60604

EXP. 11/30/23
GEORGE E. BOURIS
062-055291
LICENSED PROFESSIONAL ENGINEER OF ILLINOIS

CHICAGO DEPARTMENT OF TRANSPORTATION
DIVISION OF ENGINEERING

STATE / LAKE LOOP ELEVATED STATION
200 NORTH STATE STREET, CHICAGO, IL 60601

PLUMBING SCHEDULE

CDOT PROJECT D-1-209

DATE: 9/9/2022

SPEC. NO.

DRAWING NO. P-601

REVISION NO.1

ELEVATOR/ESCALATOR SUMP PUMP SCHEDULE											
TAG	LOCATION	CAPACITY GPM	THD (FEET)	MANUFACTURER	MODEL NO.	PUMP DISCHARGE SIZE	PUMP RPM	ELCTRICAL DATA			
								HP	VOLTAGE	PHASE	REMARKS
SP-1	ELEVATOR PIT ELEVATOR, ELV-1 NORTH	50	30	METROPOLITAN SUBMERSIBLE	ES45-OIL	2"	3450	1/2	115	1	1,2,5
SP-2	ELEVATOR PIT ELEVATOR, ELV-2 SOUTH	50	30	METROPOLITAN SUBMERSIBLE	ES45-OIL	2"	3450	1/2	115	1	1,2,5
SP-3	ELEVATOR PIT ELEVATOR, ELV-3 NORTH	50	30	METROPOLITAN SUBMERSIBLE	ES45-OIL	2"	3450	1/2	115	1	1,2,4,5
SP-4	ELEVATOR PIT ELEVATOR, ELV-4 SOUTH	50	30	METROPOLITAN SUBMERSIBLE	ES45-OIL	2"	3450	1/2	115	1	1,2,4,5
SP-5	ESCALATOR PIT No 1, NORTH/EAST	50	30	METROPOLITAN SUBMERSIBLE	ES45-OIL	2"	3450	1/2	115	1	1,2,4,5
SP-6	ESCALATOR PIT No 2, SOUTH/EAST	50	30	METROPOLITAN SUBMERSIBLE	ES45-OIL	2"	3450	1/2	115	1	1,2,4,5
SP-7	UTILITY ROOM 003, NORTH	50	30	METROPOLITAN SUBMERSIBLE	ES45-OIL	2"	3450	1/2	115	1	1,2,3,4,5
SP-8	UTILITY ROOM 013, SOUTH	50	30	METROPOLITAN SUBMERSIBLE	ES45-OIL	2"	3450	1/2	115	1	1,2,3,4,5

REMARKS:

1. CAST IRON CASE, CARBON-CERAMIC MECHANICAL SEAL AND IMPELLER, STAINLESS STEEL STRAINER, OIL SENSOR, CONTROLLER, AND ALARM SYSTEM, POWER CORD-SJTW16/3C-20FEET
2. SIMPLEX PUMP SYSTEM, CONTROLLER IN A NEMA-1, U.L LABEL, H.O.A. SWITCH, ALARM-BUZZER, SILENCE-BUTTON, NO./N.C. DRY REMOTE ALARM CONTRACTS FOR BOTH HIGH WATER ALARM AND OIL SENSING ALARM.
3. PROVIDE REINFORCED FIBERGLASS BASIN, 24" DIAMETER X 5'-0" DEEP WITH ANTI-FLOAT FLANGE, COATED STEEL BASIN COVER WITH ALL PERTINENT OPENINGS, INCLUDING ACCESS PANEL, VENT, CONTROLS, AND OTHER REQUIRED OPENINGS.
4. ALL CONTROLLING CABLING BETWEEN PUMP AND CONTROLLER PANEL, EXCEEDING 20 LINEAL FEET SHALL BE PROVIDED UNDER DIVISION 26 SCOPE.
5. LOCAL PUMP DISCONNECT FOR PUMP IN ELEVATOR PIT SHALL BE PROVIDED BY DIVISION 26 SCOPE.

SUMP PUMP SYSTEM CONTROLLER UNIT SCHEDULE	
NOTE: MINIMUM REQUIRED FEATURES	
ITEM NO	DESCRIPTION
1	ONE (1) - PUMP RUN. GREEN LIGHT
2	ONE (1) - HAND-OFF. AUTO SELECTOR SWITCH
3	ONE (1) - HIGH LIQUID LEVEL ALARM RED-LIGHT
4	OIL-PRESENT ALARM YELLOW LIGHT
5	SET: HIGH LIQUID LEVEL DRY REMOTE ALARM CONTACTS
REMARKS:	
ENTIRE SYSTEM SHALL BE MANUFACTURED, SERVICED AND WARRANTEED BY THE LOCAL DESIGNED SYSTEM MANUFACTURER OF METROPOLITAN INDUSTRIES, IN ROMOEVILLE, ILLINOIS.	

DRAIN SCHEDULE							
TAG	FIXTURE TYPE	LOCATION	BODY MATERIAL	TOP SIZE	MANUFACTURER	MODEL	REMARKS
FD-1	FLOOR DRAIN	TOILET ROOMS	CAST IRON	6" DIA.	J.R.SMITH	2010	1
FD-2	FLOOR DRAIN	JANITORS CLOSETS	CAST IRON	8 1/2" DIA.	J.R.SMITH	2220	2
FD-3	FLOOR DRAIN	METER/ UTILITY ROOMS	CAST IRON	12" DIA.	J.R.SMITH	2140	3
RD-1	ROOF DRAIN WITH ADJUSTABLE EXTENSION		CAST IRON	15 1/4" DIA.	J.R.SMITH	1015	4
RD-2	ROOF DRAIN WITH ADJUSTABLE STANDPIPE		CAST IRON	15 1/4" DIA.	J.R.SMITH	1074	5
TD-1	LINEAR TRENCH DRAIN		HVV DUTY STAINLESS STEEL	6 3/4" X 45 FT.	ZURN	Z886-HPS	6, 7 REFER TO DETAIL 3/P-502
AD-1	AREA DRAIN	PLATFORM LEVEL	CAST IRON ADJUSTABLE TOP STAINLESS STEEL	5"X5"	J.R.SMITH	2010	VANDAL PROOF SCREW, FLASHING CLAMP, INSIDE CAULK

REMARKS:

1. INSIDE CAULK, VANDEL PROOF SCREWS, ADJUSTABLE STAINLESS STEEL STRAINER, DRAIN INSTALLATION DEVICE, FLASHING CLAMP, DEEP SEAL P-TRAP.
2. LIGHT DUTY, SAFE SET SEDIMENT BUCKET WITH FLANGE INSIDE CAULK, VANDAL PROOF GRATE, DUCTILE IRON BUCKET AND GRATE, DEEP SEAL P-TRAP.
3. HEAVY DUTY WITH TRACTOR DUCTILE IRON GRATE, VANDEL PROOF GRATE, DRAIN INSTALALTION DEVICE, SEDIMENT BUCKET, DEEP SEAL P-TRAP.
4. INSIDE CAULK, CAST IRON DOME, VANDAL PROOF, FLASHING CLAMP, UNDER DECK CLAMP, ROOF DECK PLATE, ADJUSTABLE EXTENSION.
5. INSIDE CAULK, CAST IRON DOME WITH ADJUSTABLE INTERIOR STANDPIPE, VANDAL PROOF, FLASHING CLAMP, UNDER DECK CLAMP, ROOF DECK PLATE.
6. MULTIPLE LINEAR SECTIONS, CLOSED END CAPS, REINFORCED PERFORATED STAINLESS STEEL ADA (HEEL PROOF) GRATES - CLASS B.
7. ZURN, MODEL. Z887-6 LONG CATCH BASIN WIRE 4" SIDE OUTLET CONNECTION, REMOVABLE STAINLESS STEEL GRATE WITH CTA STANDARD LOGO UNIT ATTACHMENT. REFER TO DRAWING DETAILS FOR ARRANGEMENT.

DESIGN BY:									
DRAWN BY:									
CHECKED BY:									
APPROVED BY:		1	7/3/2023	ISSUED FOR BID	GS	BF	MC		
CDOT/APPROVED BY:		NO.	DATE	REVISIONS	DES.	DRW.	CHK.	DCCO	CDOT

TRANSYSTEMS
222 SOUTH RIVERSIDE PLAZA SUITE 610
CHICAGO, ILLINOIS 60606

SKIDMORE, OWINGS & MERRILL LLP
224 SOUTH MICHIGAN AVENUE, SUITE 1000
CHICAGO, ILLINOIS 60604

MILHOUSE ENGINEERING & CONSTRUCTION INC
333 SOUTH WABASH AVENUE, SUITE 2901
CHICAGO, ILLINOIS 60604

Exp. 11/30/23
GEORGE E. BOURNIAS
062-055291
PROFESSIONAL ENGINEER
OF
ILLINOIS

CHICAGO DEPARTMENT OF TRANSPORTATION
DIVISION OF ENGINEERING

STATE / LAKE LOOP ELEVATED STATION
200 NORTH STATE STREET, CHICAGO, IL 60601

SPEC. NO.

PLUMBING SCHEDULE

DRAWING NO.
P-602

CDOT PROJECT D-1-209 | DATE: 9/9/2022 | REVISION NO.1

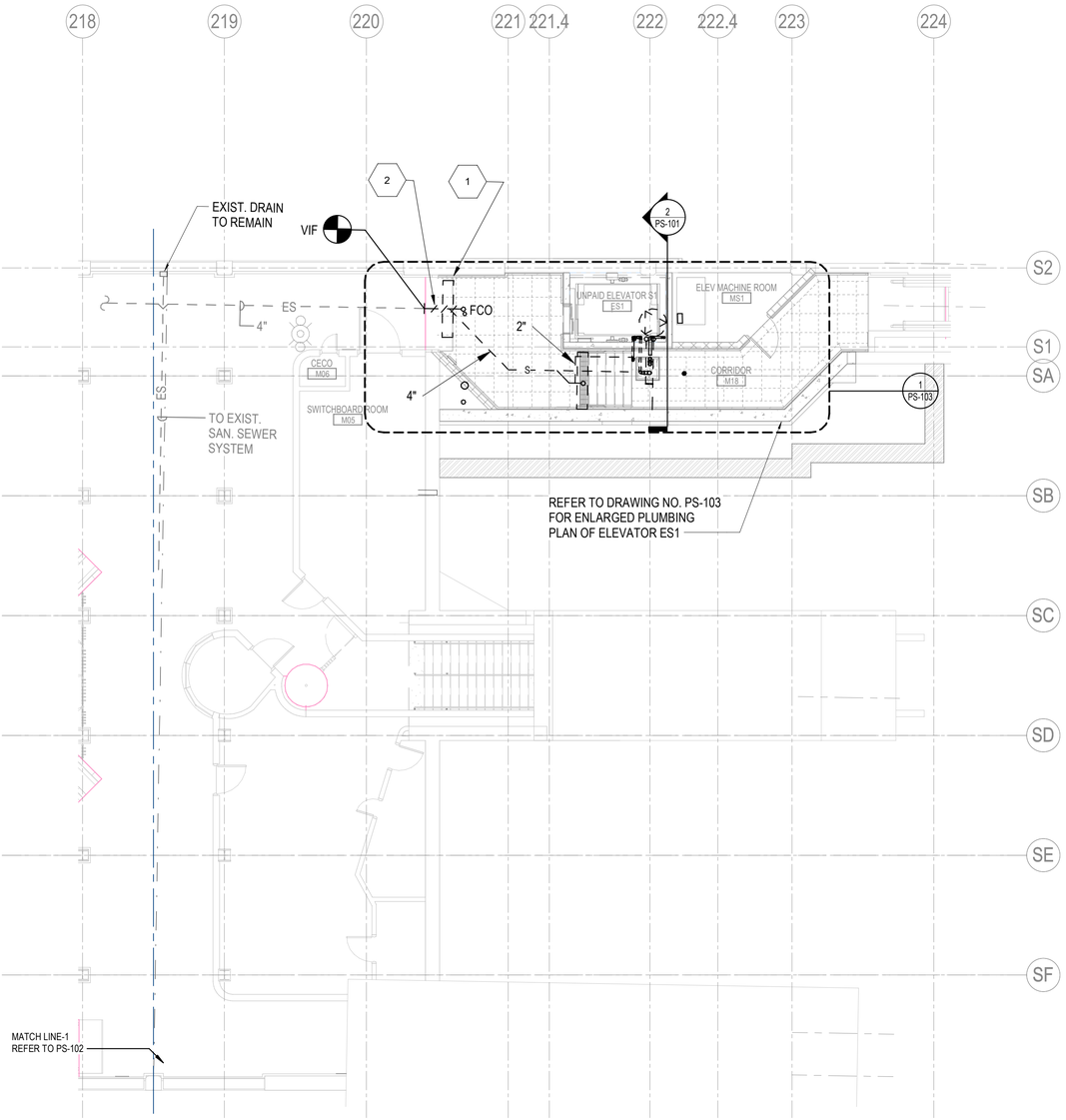

1 PLUMBING SUBWAY MEZZANINE LEVEL PLAN NORTH
1/8" = 1'-0"

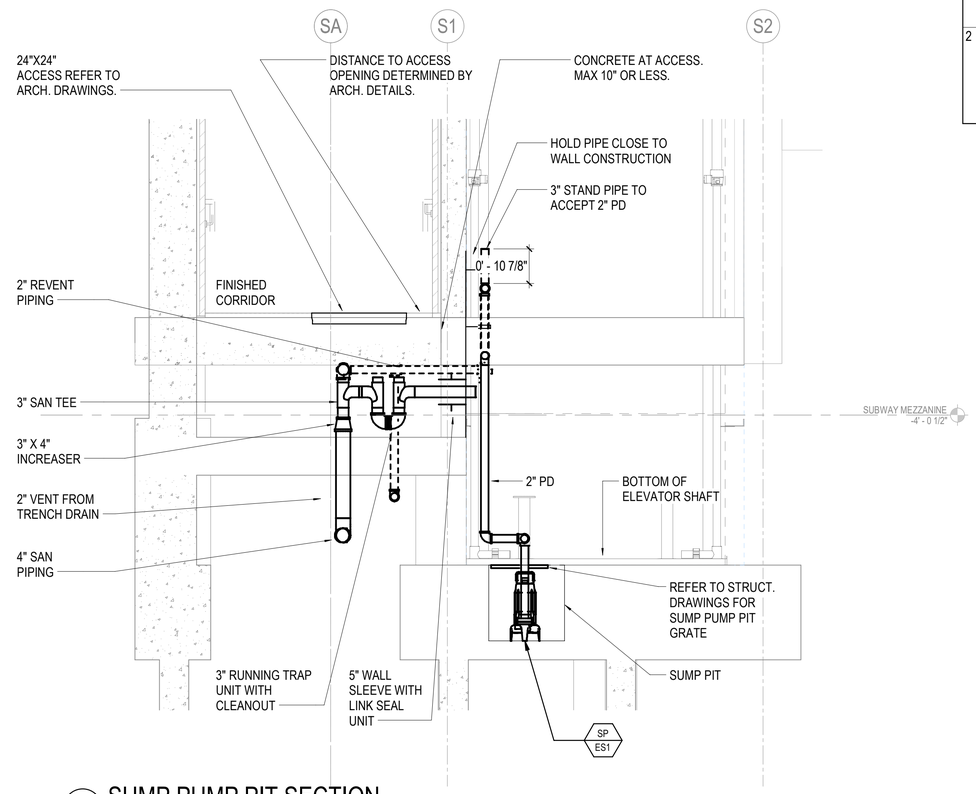

2 SUMP PUMP PIT SECTION
1/2" = 1'-0"

DEMOLITION KEYED NOTES	
KEY VALUE	KEYNOTE TEXT
1	EXISTING TRENCH DRAIN AND GRATE REMOVED. REFER TO ARCH. PLANS AND DETAILS.
2	DISCONNECT SANITARY SEWER CONNECTION, INCLUDING OUTLET PIPE BACK TO POINT FOR RECONNECTION OF NEW PIPING.

DESIGN BY:									
DRAWN BY:									
CHECKED BY:									
APPROVED BY:		1	7/3/2023	ISSUED FOR BID	GS	KG	MC		
CDOT/APPROVED BY:		NO.	DATE	REVISIONS	DES.	DRW.	CHK.	DCCO	CDOT

TRANSYSTEMS
222 SOUTH RIVERSIDE PLAZA SUITE 610
CHICAGO, ILLINOIS 60606

SKIDMORE, OWINGS & MERRILL LLP
224 SOUTH MICHIGAN AVENUE, SUITE 1000
CHICAGO, ILLINOIS 60604

MILHOUSE ENGINEERING & CONSTRUCTION INC
333 SOUTH WABASH AVENUE, SUITE 2901
CHICAGO, ILLINOIS 60604

EXP. 11/30/23
062-055291
GEORGE E. BOUTRIS
LICENSED PROFESSIONAL ENGINEER OF ILLINOIS

CHICAGO DEPARTMENT OF TRANSPORTATION
DIVISION OF ENGINEERING

STATE / LAKE LOOP ELEVATED STATION
200 NORTH STATE STREET, CHICAGO, IL 60601

PLUMBING MEZZANINE LEVEL NORTH NEW PLAN

CDOT PROJECT D-1-209

DATE: 9/9/2022

SPEC. NO.

DRAWING NO. PS-101

REVISION NO. 1

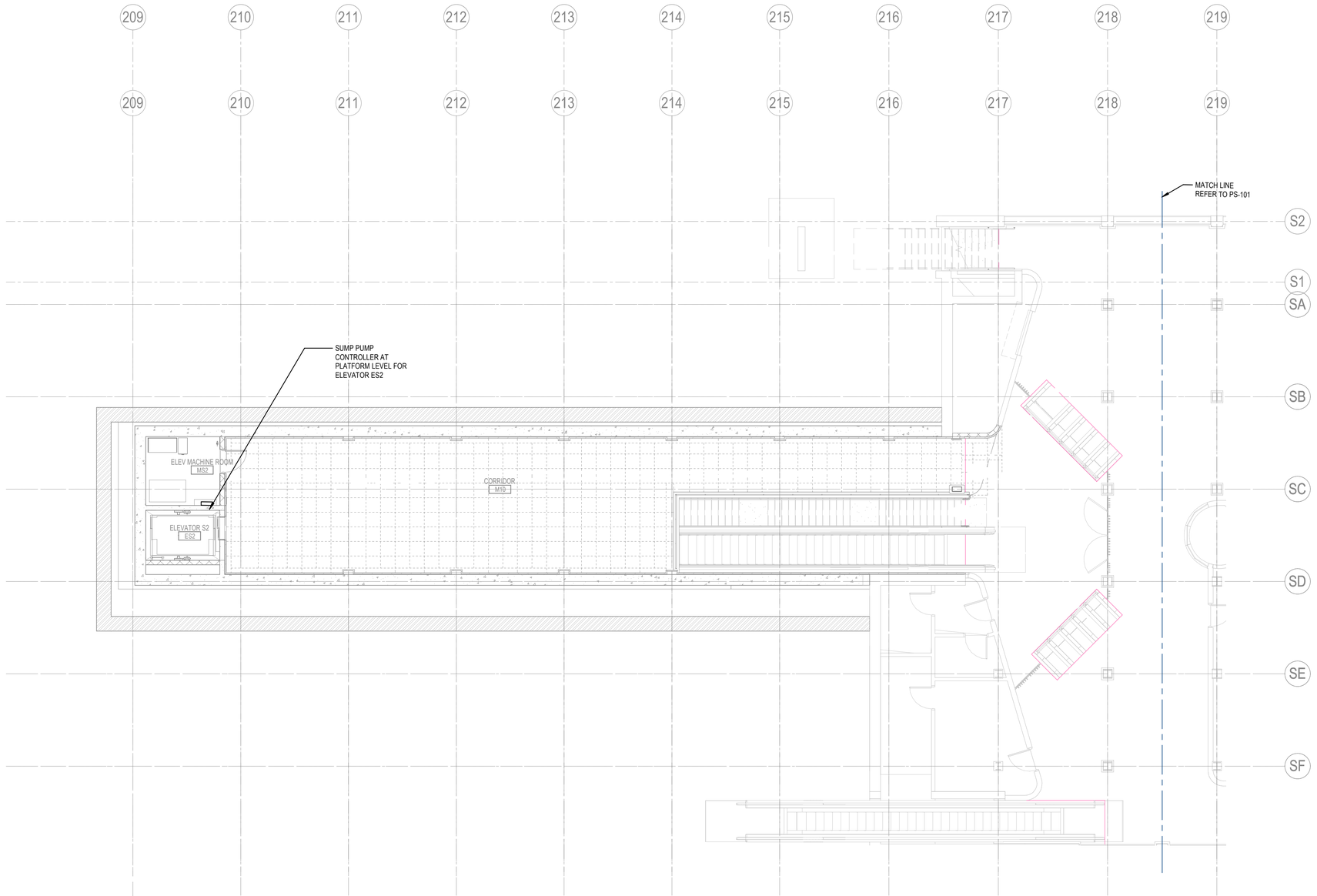

1 PLUMBING SUBWAY MEZZANINE LEVEL SOUTH

1/8" = 1'-0"

DESIGN BY:										
DRAWN BY:										
CHECKED BY:										
APPROVED BY:		1	7/3/2023	ISSUED FOR BID	GS	KG	MC			
CDOT/APPROVED BY:		NO.	DATE	REVISIONS	DES.	DRW.	CHK.	DCCO	CDOT	

TRANSYSTEMS
222 SOUTH RIVERSIDE PLAZA SUITE 610
CHICAGO, ILLINOIS 60606

SKIDMORE, OWINGS & MERRILL LLP
224 SOUTH MICHIGAN AVENUE, SUITE 1000
CHICAGO, ILLINOIS 60604

MILHOUSE ENGINEERING &
CONSTRUCTION INC
333 SOUTH WABASH AVENUE, SUITE 2901
CHICAGO, ILLINOIS 60604

EXP. 11/30/23
GEORGE E. BOURNIAS
062-055291
LICENSED PROFESSIONAL ENGINEER OF ILLINOIS

CHICAGO DEPARTMENT
OF TRANSPORTATION
DIVISION OF ENGINEERING

STATE / LAKE LOOP ELEVATED STATION
200 NORTH STATE STREET, CHICAGO, IL 60601

SPEC. NO.

PLUMBING MEZZANINE LEVEL SOUTH NEW PLAN

DRAWING NO.
PS-102

CDOT PROJECT D-1-209

DATE: 9/9/2022

REVISION NO. 1

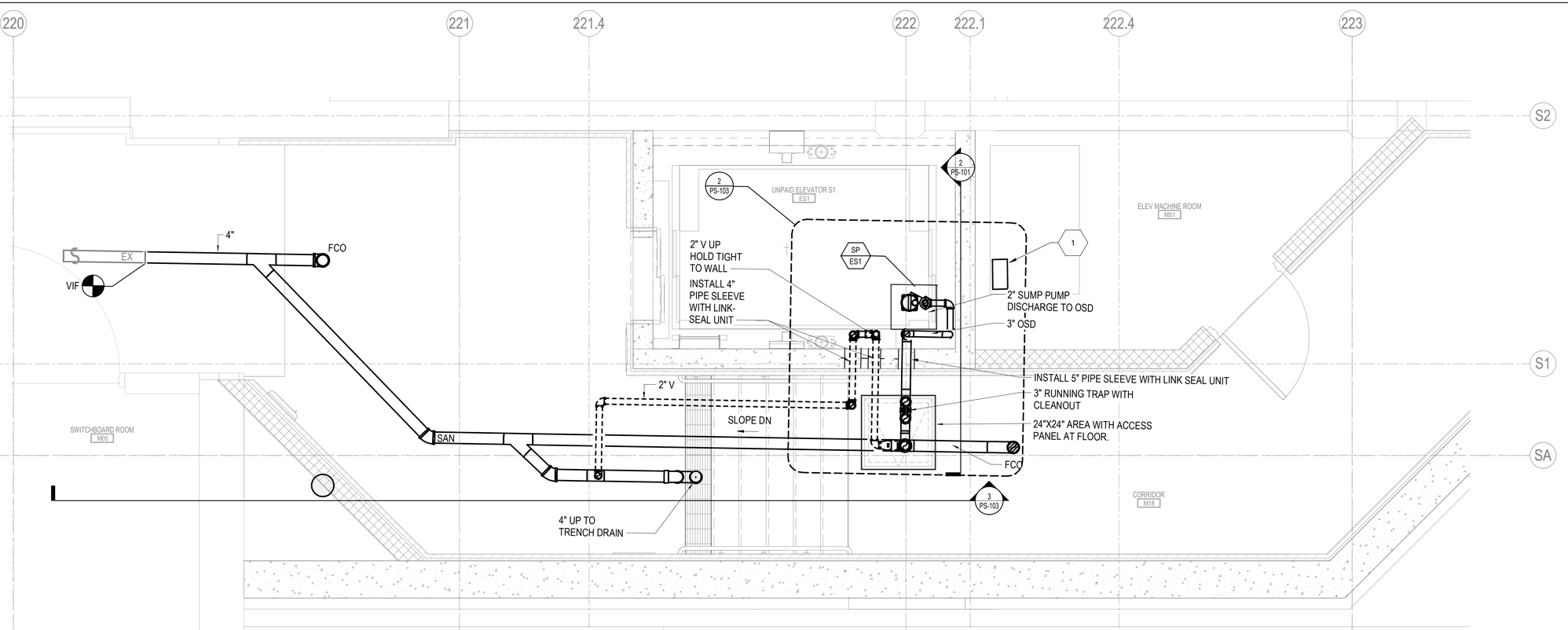

KEYED NOTES	
KEY VALUE	KEYNOTE TEXT
1	WALL MOUNTED SUMP PUMP CONRTOL PANEL WITH LEVEL CONTROL AND ALARM INDICATION.

1 ELEVATOR ES1 ENLARGE MEZZANINE PLAN

1/2" = 1'-0"

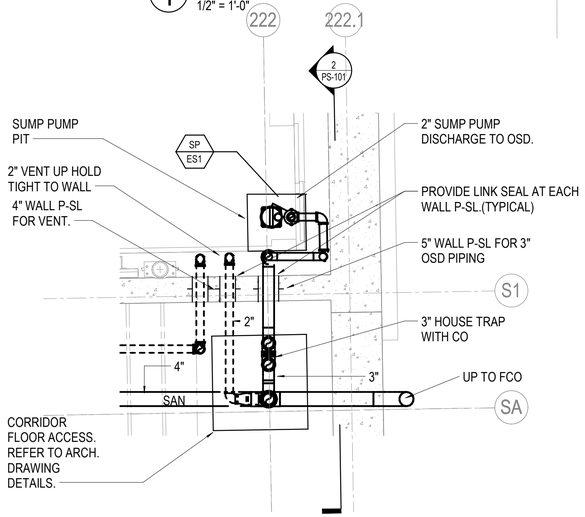

2 PARTIAL SUMP PUMP PIT PLAN

1/2" = 1'-0"

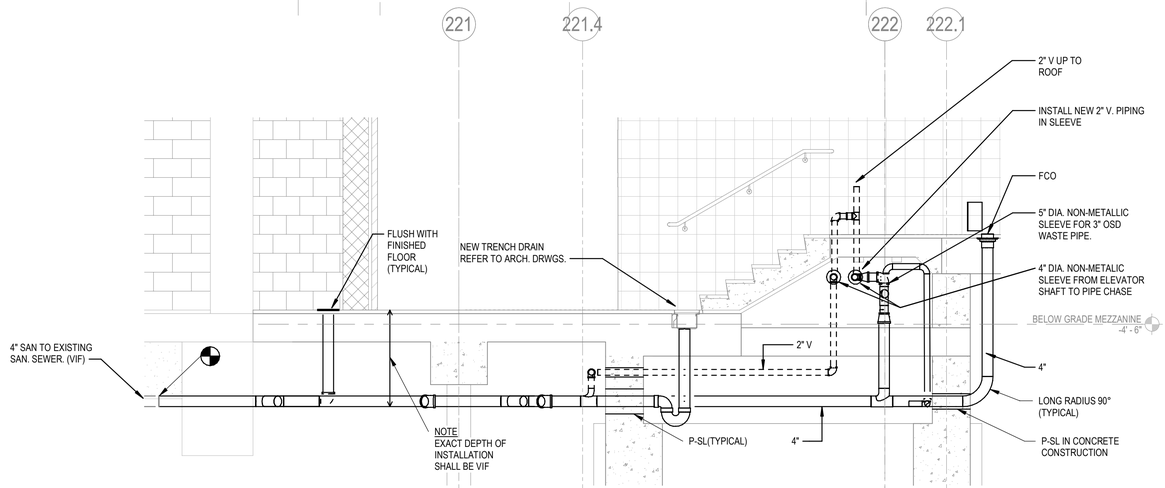

3 SECTION A

3/8" = 1'-0"

DESIGN BY:										
DRAWN BY:										
CHECKED BY:										
APPROVED BY:		1	7/3/2023	ISSUED FOR BID	GS	KG	MC			
CDOT/APPROVED BY:		NO.	DATE	REVISIONS	DES.	DRW.	CHK.	DCCO	CDOT	

TRANSYSTEMS
222 SOUTH RIVERSIDE PLAZA SUITE 610
CHICAGO, ILLINOIS 60606

SKIDMORE, OWINGS & MERRILL LLP
224 SOUTH MICHIGAN AVENUE, SUITE 1000
CHICAGO, ILLINOIS 60604

MILHOUSE ENGINEERING & CONSTRUCTION INC
333 SOUTH WABASH AVENUE, SUITE 2901
CHICAGO, ILLINOIS 60604

EXP. 11/30/23
GEORGE E. ROUSSOS
062-055291
LICENSED PROFESSIONAL ENGINEER OF ILLINOIS

CHICAGO DEPARTMENT OF TRANSPORTATION
DIVISION OF ENGINEERING

STATE / LAKE LOOP ELEVATED STATION
200 NORTH STATE STREET, CHICAGO, IL 60601

SPEC. NO.

ENLARGED MEZZANINE PLAN - PLUMBING NORTH

DRAWING NO.
PS-103

CDOT PROJECT D-1-209 | DATE: 9/9/2022 | REVISION NO.1

KEYED NOTES	
KEY VALUE	KEYNOTE TEXT
1	NEW PLATFORM ACCESS HATCH. REFER TO ARCH DRAWINGS FOR LOCATION.
2	EXTEND PUMP CONTROL CABLING UP TO CONTROL PANEL LOCATED IN ELEVATOR MACHINE ROOM M11.
3	PROVIDE NEW WALL SLEEVE IN EXISTING AND NEW WALL CONSTRUCTION FOR INSTALLATION OF PUMP DISCHARGE PIPING. PROVIDE LINK SEAL AT PENETRATION.
4	INSTALL AND ROUTE PIPING ON AREA OPEN SPACE BELOW PLATFORM. ROUTE TO CLEAR EXISTING INTERFERENCES AND DISCHARGE TO EXISTING ESCALATOR PIT, DISCHARGE DOWN TO 12" ABOVE PIT FLOOR.
5	SUPPORT ALL PIPING AS REQUIRED FROM EXISTING STRUCTURE/ CONSTRUCTION.

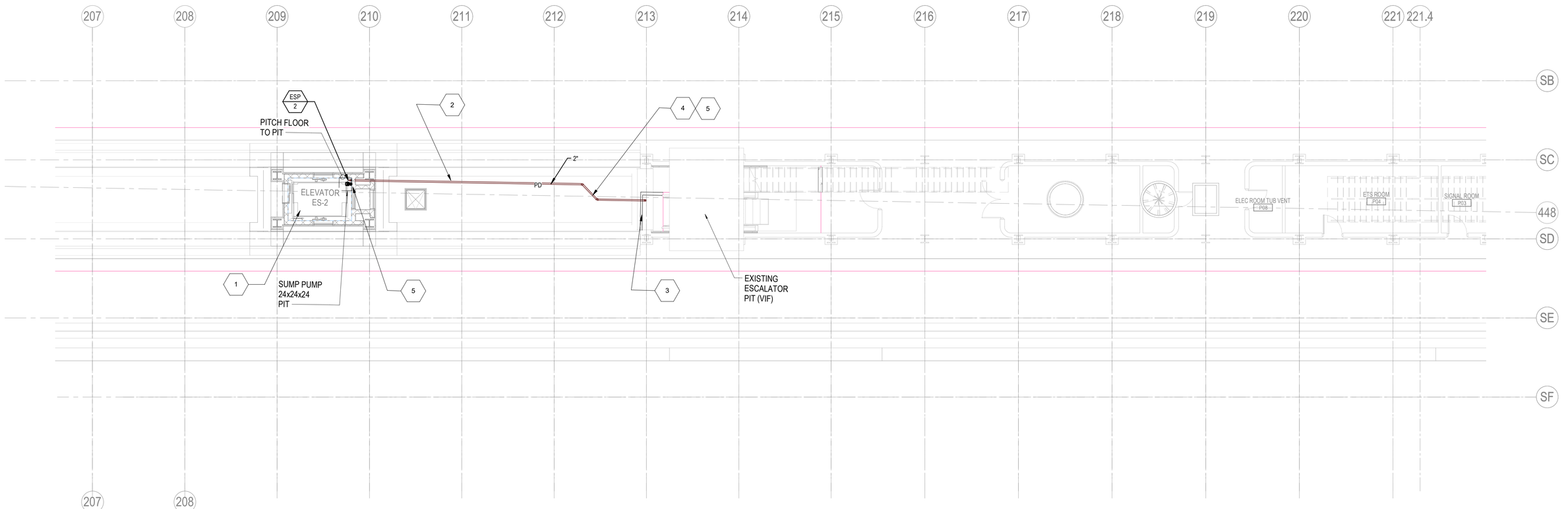

1 PLUMBING ELEVATOR ES2 PLATFORM LEVEL FLOOR PLAN SOUTH
1/8" = 1'-0"

DESIGN BY:										
DRAWN BY:										
CHECKED BY:										
APPROVED BY:		1	7/3/2023	ISSUED FOR BID	GS	KG	MC			
CDOT/APPROVED BY:		NO.	DATE	REVISIONS	DES.	DRW.	CHK.	DCCO	CDOT	

TRANSYSTEMS
222 SOUTH RIVERSIDE PLAZA SUITE 610
CHICAGO, ILLINOIS 60606

SKIDMORE, OWINGS & MERRILL LLP
224 SOUTH MICHIGAN AVENUE, SUITE 1000
CHICAGO, ILLINOIS 60604

MILHOUSE ENGINEERING &
CONSTRUCTION INC
333 SOUTH WABASH AVENUE, SUITE 2901
CHICAGO, ILLINOIS 60604

EXP. 11/30/23
GEORGE E. BOUTIS
062-055291
LICENSED PROFESSIONAL ENGINEER OF ILLINOIS

CHICAGO DEPARTMENT
OF TRANSPORTATION
DIVISION OF ENGINEERING

STATE / LAKE LOOP ELEVATED STATION
200 NORTH STATE STREET, CHICAGO, IL 60601

PLUMBING ELEVATOR ES-2 PLATFORM FLOOR PLAN

CDOT PROJECT D-1-209

DATE: 9/9/2022

SPEC. NO.

DRAWING NO.
PS-104

REVISION NO. 1

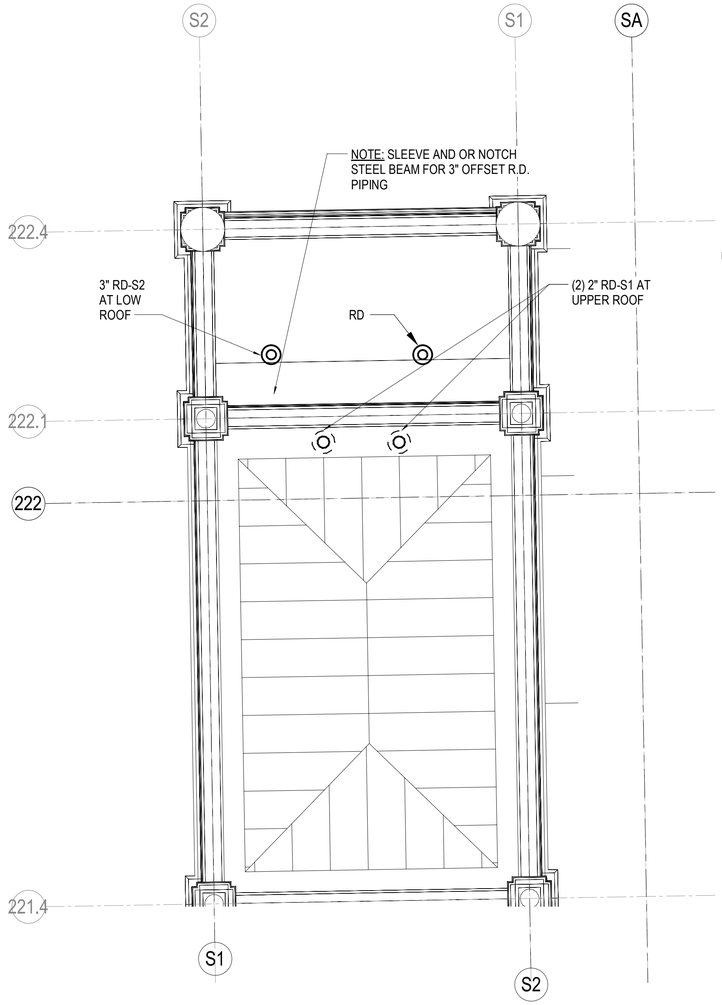

1 ROOF PLAN AT ELEVATOR ES-1
1/2" = 1'-0"

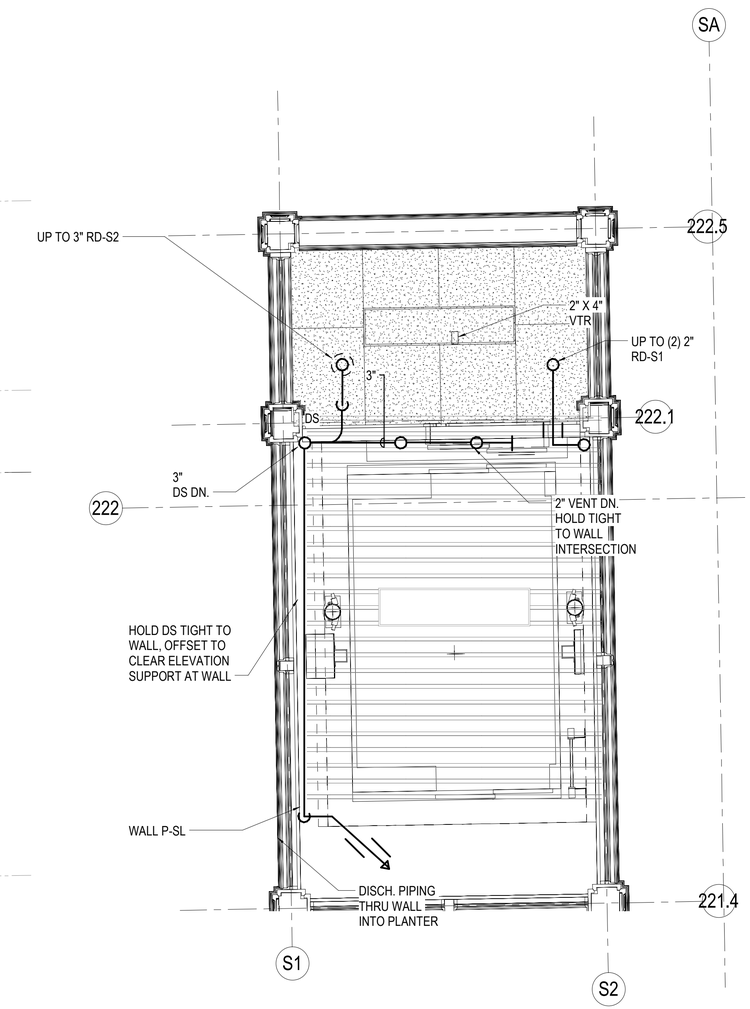

2 STREET LEVEL1
1/2" = 1'-0"

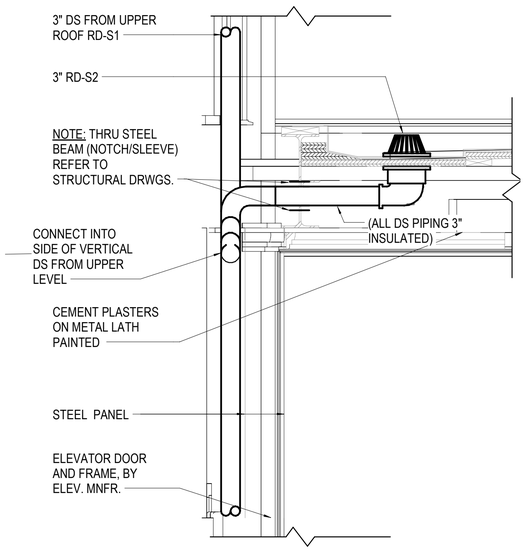

NOTE:
REFER TO ARCH. ELEVATOR SECTIONS AND DETAILS OF ES1 FOR REQUIRED ELEVATOR CLEARANCES AND STRUCTURAL FOR EXACT ROOF DRAIN AND DS INSTALLATION LOCATIONS.

3 SECTION AT ELEVATOR ES-1 LOW ROOF
1 1/2" = 1'-0"

DESIGN BY:										
DRAWN BY:										
CHECKED BY:										
APPROVED BY:		1	7/3/2023	ISSUED FOR BID	GS	KG	MC			
CDOT/APPROVED BY:		NO.	DATE	REVISIONS	DES.	DRW.	CHK.	DCCO	CDOT	

TRANSYSTEMS
222 SOUTH RIVERSIDE PLAZA SUITE 610
CHICAGO, ILLINOIS 60606

SKIDMORE, OWINGS & MERRILL LLP
224 SOUTH MICHIGAN AVENUE, SUITE 1000
CHICAGO, ILLINOIS 60604

MILHOUSE ENGINEERING & CONSTRUCTION INC
333 SOUTH WABASH AVENUE, SUITE 2901
CHICAGO, ILLINOIS 60604

EXP. 11/30/23
GEORGE E. BOURIS
062-055291
LICENSED PROFESSIONAL ENGINEER OF ILLINOIS

CHICAGO DEPARTMENT OF TRANSPORTATION
DIVISION OF ENGINEERING

STATE / LAKE LOOP ELEVATED STATION
200 NORTH STATE STREET, CHICAGO, IL 60601

SPEC. NO.

PLUMBING ELEVATOR ES-1 PLAN AND DETAILS

DRAWING NO.
PS-105

CDOT PROJECT D-1-209

DATE: 9/9/2022

REVISION NO.1

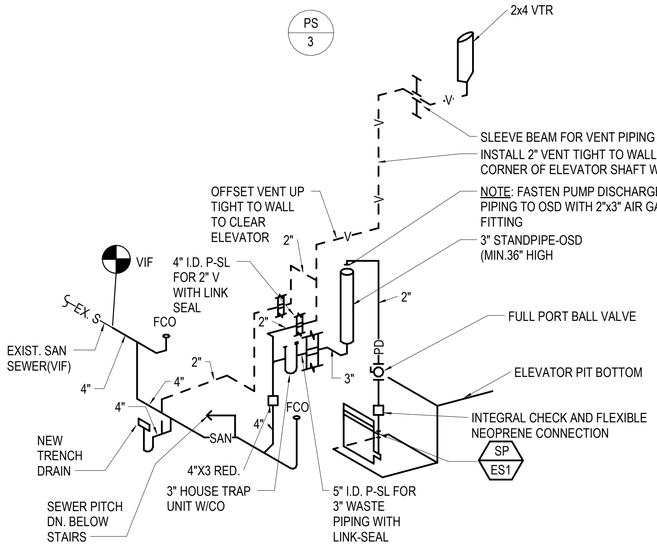

1 WASTE AND VENT RISER DIAGRAM

NTS

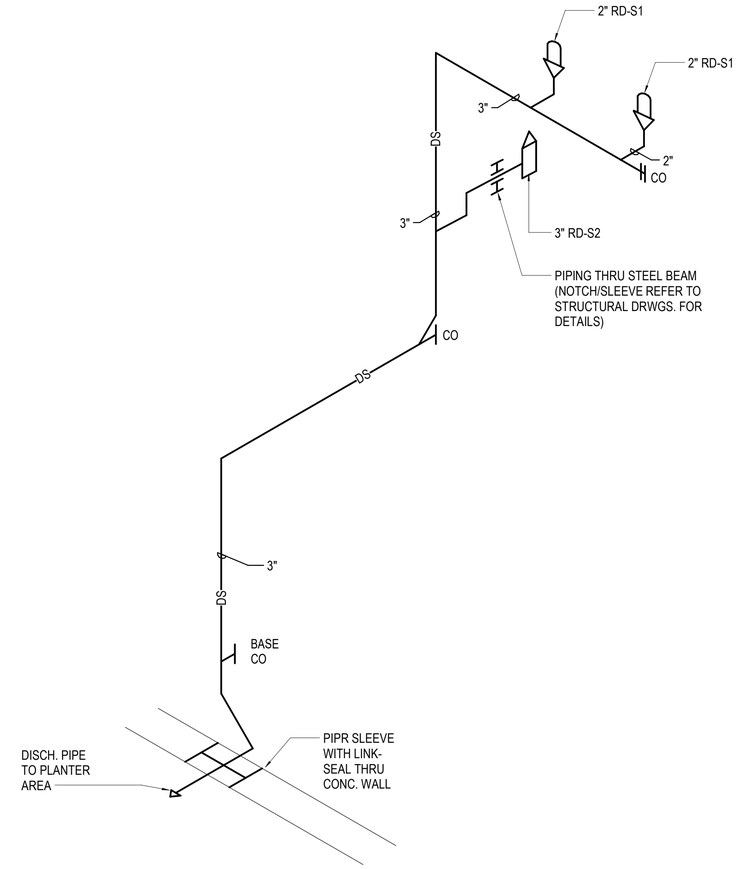

2 ELEVATOR ES-1 STORM RISER DIAGRAM

NTS

DESIGN BY:										
DRAWN BY:										
CHECKED BY:										
APPROVED BY:		1	7/3/2023	ISSUED FOR BID	GS	BF	MC			
CDOT/APPROVED BY:		NO.	DATE	REVISIONS	DES.	DRW.	CHK.	DCCO	CDOT	

TRANSYSTEMS
222 SOUTH RIVERSIDE PLAZA SUITE 610
CHICAGO, ILLINOIS 60606

SKIDMORE, OWINGS & MERRILL LLP
224 SOUTH MICHIGAN AVENUE, SUITE 1000
CHICAGO, ILLINOIS 60604

MILHOUSE ENGINEERING &
CONSTRUCTION INC
333 SOUTH WABASH AVENUE, SUITE 2901
CHICAGO, ILLINOIS 60604

EXP. 11/30/23
062-055291
GEORGE E. BOUTIS
LICENSED PROFESSIONAL ENGINEER OF ILLINOIS

CHICAGO DEPARTMENT
OF TRANSPORTATION
DIVISION OF ENGINEERING

STATE / LAKE LOOP ELEVATED STATION
200 NORTH STATE STREET, CHICAGO, IL 60601

SUBWAY PLUMBING RISERS

CDOT PROJECT D-1-209

DATE: 9/9/2022

SPEC. NO.

DRAWING NO.
PS-200

REVISION NO. 1

ELEVATOR/ESCALATOR SUMP PUMP SCHEDULE											
TAG	LOCATION	CAPACITY GPM	THD (FEET)	MANUFACTURER	MODEL NO.	PUMP DISCHARGE SIZE	PUMP RPM	ELECTRICAL DATA			
								HP	VOLTAGE	PHASE	REMARKS
SP-ES1	ELEVATOR PIT ELEVATOR, ES1	50	30	METROPOLITAN INDUSTRIES, INC.	ES45-OIL HVY. DUTY SUBMERSIBLE	2"	1750	1/2	115	1/60	1 TO 5
SP-ES2	ELEVATOR PIT ELEVATOR, ES2	50	30	METROPOLITAN INDUSTRIES, INC.	ES45-OIL HVY. DUTY SUBMERSIBLE	2"	1750	1/2	115	1/60	1 TO 5

REMARKS:

1. PUMP CONSTRUCTION CAST IRON CASING, CARBON-CERAMIC MECHANICAL SEAL AND AN OIL-SENSOR, CONTROLLER AND ALARM SYSTEM.
2. MOTOR CLOSE-COUPLED, OIL FILLED MOTOR.
3. PUMP SHALL INCLUDE OIL SENSOR AND CONTROLLER WITH FEATURES, PUMP-RUN GREEN LIGHT, H-O-A SELECTOR SWITCH, HIGH LIQUID LEVEL RED LIGHT, OIL-PRESENT ALARM YELLOW LIGHT. SET F HIGH LIQUID LEVEL DRY REMOTE ALARM CONTACTS. CONTROL SYSTEM ENCLOSED. IN A NEMA-1, UL LABELED SIMPLEX CONTROL ENCLOSURE, ALARM BUZZER WITH SILENCE BUTTON AND N.O/N.C. DRY REMOTE ALARM CONTACTS FOR BOTH HIGH WATER ALARM AND OIL SENSING ALARM.
4. CONTROL SYSTEM SHALL BE CAPABLE OF SHUTTING DOWN PUMP OPERATION AND SIGNALLING AN ALARM IF OIL ENTERS THE WET PUMP PIT.
5. ALL CONTROLLING CABLING BETWEEN PUMP AND CONTROLLER, EXCEEDING 20 LINEAL FEET SHALL BE PROVIDED UNDER DIVISION 26 SCOPE.
6. LOCAL PUMP DISCONNECT FOR PUMP IN ELEVATOR PIT SHALL BE PROVIDED BY DIVISION 26 SCOPE.

SUMP PUMP SYSTEM CONTROLLER UNIT SCHEDULE	
NOTE: MINIMUM REQUIRED FEATURES	
ITEM NO	DESCRIPTION
1	ONE (1) - PUMP RUN. GREEN LIGHT
2	ONE (1) - HAND-OFF. AUTO SELECTOR SWITCH
3	ONE (1) - HIGH LIQUID LEVEL ALARM RED-LIGHT
4	OIL-PRESENT ALARM YELLOW LIGHT
5	SET: HIGH LIQUID LEVEL DRY REMOTE ALARM CONTACTS
ENTIRE SYSTEM SHALL BE MANUFACTURED, SERVICED AND WARRANTEED BY THE LOCAL DESIGNED SYSTEM MANUFACTURER OF METROPOLITAN INDUSTRIES, IN ROMOEVILLE, ILLINOIS.	

DRAIN SCHEDULE								
TAG	FIXTURE TYPE	LOCATION	BODY MATERIAL	TOP SIZE	MANUFACTURER	MODEL	WGT LBS	REMARKS
RD-S1	HIGH DOME GUTTER DRAIN	ROOF OF ELEVATOR S1	DUCO CAST IRON 4-1/2" HIGH DOME	6"	J.R.SMITH	FIG.1630	6	1
RD-S2	LOW DONE 4-1/2" HIGH WITH SIDE OUTLET	ENTRANCE LOW ROOF OF ELEVATOR S1	DUCO CAST IRON LOW PROFILE DOME	8-1/2"	J.R.SMITH	FIG.1340	30	2

REMARKS:

1. UNIT WITH CAULK OUTLET, POLISH BRONZE DOME, 4" DEEP BODY.
2. UNIT WITH INTEGRAL SIDE OUTLET, VANDAL PROOF DOME, UNDERDECK CLAMP, ROUGH BRONZE DOME, INSIDE CAULK.

DESIGN BY:									
DRAWN BY:									
CHECKED BY:									
APPROVED BY:		1	7/3/2023	ISSUED FOR BID	GS	BF	MC		
CDOT/APPROVED BY:		NO.	DATE	REVISIONS	DES.	DRW.	CHK.	DCCO	CDOT

TRANSYSTEMS
222 SOUTH RIVERSIDE PLAZA SUITE 610
CHICAGO, ILLINOIS 60606

SKIDMORE, OWINGS & MERRILL LLP
224 SOUTH MICHIGAN AVENUE, SUITE 1000
CHICAGO, ILLINOIS 60604

MILHOUSE ENGINEERING & CONSTRUCTION INC
333 SOUTH WABASH AVENUE, SUITE 2901
CHICAGO, ILLINOIS 60604

EXP. 11/30/23
GEORGE E. BOURIS
062-055291
LICENSED PROFESSIONAL ENGINEER OF ILLINOIS

CHICAGO DEPARTMENT OF TRANSPORTATION
DIVISION OF ENGINEERING

STATE / LAKE LOOP ELEVATED STATION
200 NORTH STATE STREET, CHICAGO, IL 60601

PLUMBING SCHEDULES

CDOT PROJECT D-1-209 | DATE: 9/9/2022

SPEC. NO.

DRAWING NO. PS-601

REVISION NO.1

SYMBOLS

- SHUTOFF VALVE (GATE VALVE FOR 2 1/2" AND LARGER. BALL VALVE FOR 2" AND SMALLER)
- GATE VALVE
- GLOBE VALVE
- CHECK VALVE
- BUTTERFLY VALVE
- BALL VALVE
- STRAINER
- STRAINER WITH BLOWDOWN
- BALANCING VALVE
- UNION
- FLANGE
- PRESSURE GAGE (WITH GAUGE VALVE)
- PIPE ANCHOR
- SLEEVE
- PIPE GUIDE
- PIPE FLEXIBLE CONNECTION
- FILTER
- MANUAL AIR VENT
- AUTOMATIC AIR VENT
- THERMOSTATIC AIR VET
- CONCENTRIC REDUCER
- ECCENTRIC REDUCER
- DIRECTION OF FLOW
- PUMP
- PIPE ELBOW UP
- PIPE ELBOW DOWN
- PIPE TEE UP
- PIPE TEE DOWN
- CONNECT TO EXISTING
- KEY NOTE SYMBOL

- SUPPLY DUCT UP
- SUPPLY DUCT DOWN
- RETURN DUCT UP
- RETURN DUCT DOWN
- EXHAUST DUCT UP
- EXHAUST DUCT DOWN
- SUPPLY AIR TERMINAL
- RETURN AIR TERMINAL
- SQUARE ELBOW WITH TURNING VANES AND ACCESS DOOR ON INLET SIDE
- FLEXIBLE DUCT
- BOOSTER COIL, DUCT MOUNTED
- DUCT SHOE WITH DAMPER
- VOLUME DAMPER
- MOTORIZED DAMPER (MD)
- SMOKE DAMPER (SD)
- FIRE DAMPER (FD)
- COMBINATION FIRE/SMOKE DAMPER (FSD)
- TRANSFER DUCT W/REGISTERS
- DOOR TRANSFER GRILLE
- THERMOSTAT / TEMPERATURE SENSOR (T)
- HIGH TEMPERATURE LIMIT ALARM SWITCH (H)
- LOW TEMPERATURE LIMIT ALARM SWITCH (L)
- HVAC TERMINAL TAG (1 | 2 - 3)

1. TERMINAL TYPE
2. AIRFLOW CFM
3. TERMINAL FUNCTION
   - S-SUPPLY
   - R-RETURN
   - E-EXHAUST
   - T-TRANSFER

- MECHANICAL EQUIPMENT TAG (1 / 2)

1. MECHANICAL EQUIPMENT TYPE
2. EQUIPMENT NUMBER

CHICAGO ENERGY NOTES

1. MINIMUM EQUIPMENT COOLING EFFICIENCIES SHALL MEET ASHRAE 90.1-2013.
2. ALL ROOFTOP UNITS AND AIR HANDLERS SHALL BE FURNISHED WITH ECONOMIZERS.
3. MOTORIZED DAMPERS SHALL BE INSTALLED ON ALL INTAKES AND EXHAUST OPENINGS UNLESS NOTED OTHERWISE.
4. MAXIMUM FAN NAMEPLATE HORSEPOWER SHALL NOT EXCEED ASHRAE 90.1-2013.
5. LOAD CALCULATIONS WERE BASED ON ASHRAE 2001 FUNDAMENTALS.
6. ALL PROGRAMMABLE THERMOSTATS SHALL HAVE 5 DEGREE DEADBAND AND SHALL HAVE 7-DAY CLOCK, 2-HOUR MANUAL OVERRIDE, 10 HOUR BACKUP AND SETBACK CAPABLE OF 55 DEGREES HEATING AND 85 DEGREES COOLING. (EXCEPT CONTINUOUS OPERATING ZONES)
7. DUCT INSULATION AS SPECIFIED WITH MINIMUM VALUES AS FOLLOWS:
   A. R-6 SUPPLY AND RETURN DUCT INSULATION IN UNCONDITIONED SPACES.
   B. R-8 SUPPLY AND RETURN DUCT INSULATION FOR EXTERIOR DUCTS.
   C. R-3 SUPPLY AND RETURN DUCT INSULATION UNDERGROUND.
8. ALL DUCTWORK SHALL BE SEALED. PRESSURE SENSITIVE TAPE IS NOT USED AS THE PRIMARY SEALANT.

CITY OF CHICAGO PERMITTING NOTES

1. ALL WORK PERFORMED AND EQUIPMENT INSTALLED UNDER THIS CONTRACT SHALL BE IN ACCORDANCE WITH ALL APPLICABLE CITY OF CHICAGO CODES.
2. ALL NEW DUCTWORK SHALL BE FABRICATED FROM PRIME FIRST QUALITY GALVANIZED SHEET METAL, UNLESS OTHERWISE NOTED. GAUGES OF METAL, HANGER SPACING, ETC. SHALL CONFORM TO THE LATEST EDITION OF SMACNA HVAC DUCT CONSTRUCTION STANDARDS FOR DUCT CONSTRUCTION (18-28-603.3).
3. PROVIDE MANUAL LOCKING TYPE VOLUME DAMPERS IN ALL BRANCH DUCTWORK TO AIR DIFFUSERS, REGISTERS AND GRILLES. (13-184-080(15))
4. ALL FLEXIBLE LOW-PRESSURE DUCTWORK SHALL BE INSULATED, CHICAGO APPROVED AND NOT EXCEED 5'-0" IN LENGTH. MANUFACTURER TO BE WIREMOLD, TYPE WK UL-181, CLASS 1.
5. PROVIDE TURNING VANES IN ALL LOW-PRESSURE 90-DEGREE DUCT TURNS.
6. TRANSFER DUCTS SHALL NOT EXCEED 5'-0" IN LENGTH.
7. ALL AIR MOVING EQUIPMENT SHALL BE INSTALLED WITH VIBRATION ISOLATORS AND PROVIDED WITH FLEXIBLE DUCT CONNECTIONS.
8. ALL EQUIPMENT SHALL HAVE TOTALLY ENCLOSED MOTORS AND BE RATED TO OPERATE IN PLENUM CEILINGS, INCLUDING ALL SUPPLY AIR AND RETURN AIR FAN MOTORS EXPOSED TO THE AIR STREAM.
9. THE CONTRACTOR SHALL GUARANTEE THAT THE PLENUM CHAMBER USED FOR RECIRCULATION OF AIR WILL BE OF TIGHT CONSTRUCTION AND THAT ALL SOURCES OF AIR CONTAMINATION FROM TRAPS, SOIL STACKS, DOWN SPOUTS, VENTS, EXHAUST DISCHARGES AND OTHER SOURCES WILL BE ENCLOSED SO THAT NO CONTAMINATED AIR WILL BE RECIRCULATED.
10. THE MAXIMUM SOUND PRESSURE LEVEL, "A-SCALE LEVELS", AT THE PROPERTY LINE BORDERING RESIDENTIAL AREAS SHALL NOT EXCEED 55 DECIBELS (dB) FOR HVAC EQUIPMENT INSTALLED UNDER THIS CONTRACT.
11. OUTSIDE AIR INTAKES SHALL BE AT LEAST 10'-0" ABOVE GRADE AND A MINIMUM OF 15'-0" FROM ALL EXHAUST AIR AND SOURCES OF CONTAMINATION. MAXIMUM VELOCITY THROUGH OUTSIDE AIR LOUVERS AND DUCTWORK SHALL NOT EXCEED 1000 FPM.
12. ALL FLUES SHALL TERMINATE 6'-0" ABOVE THE ROOFLINE.
13. STRAINERS, ISOLATION VALVES AND BALANCE VALVES SHALL BE LINE SIZE UNLESS NOTED OTHERWISE.
14. PROVIDE MANUAL AIR VENTS TO ALL HIGH POINTS IN PIPING.
15. ALL EXPANSION VALVES, DEVICES AND CONNECTIONS SHALL BE REMOVED FROM THE AIRSTREAM OF ALL MECHANICAL EQUIPMENT AS PER CITY OF CHICAGO CODE. (13-192-380)
16. THE MECHANICAL CONTRACTOR SHALL FURNISH AND INSTALL A SAFETY RELIEF VALVE DESIGNED TO RELIEVE AND/OR PREVENT THE BUILD-UP OF EXCESSIVE REFRIGERANT PRESSURE WITHIN THE DIRECT-EXPANSION SYSTEM. THE PRESSURE RELIEF DEVICE SHALL BE SET AT 400 psi AND SHALL BE INSTALLED ON THE HIGH PRESSURE SIDE AT THE DISCHARGE OF THE COMPRESSOR AND UPSTREAM OF THE COMPRESSOR SHUT-OFF (STOP) VALVE. (13-192-520 thru 560)
17. THE MECHANICAL CONTRACTOR SHALL FURNISH AND INSTALL A REFRIGERANT-RELIEF DISCHARGE PIPE. THE DISCHARGE PIPE OUTLET SHALL BE INSTALLED A MINIMUM OF 12'-0" ABOVE THE GROUND AND A MINIMUM OF 10'-0" FROM ANY OPENING, AND 20'-0" FROM ANY FIRE ESCAPE AND SHALL DISCHARGE THROUGH A TURNED DOWN ELBOW. (18-28-1106.13).
18. REFRIGERATION PIPING SHALL BE TYPE K COPPER WITH BRAZED SOCKET TYPE FITTINGS. (18-28-1107.4.4).
19. ALL LOUVERS SHALL HAVE 50% FREE AREA.

GENERAL NOTES

1. THE DRAWINGS INDICATE DIAGRAMMATICALLY THE EXTENT, GENERAL CHARACTER AND LOCATION OF WORK INCLUDED. WORK INDICATED, BUT HAVING MINOR DETAILS OMITTED, SHALL BE PROVIDED INCLUDING THESE DETAILS AT NO ADDITIONAL COST TO OWNER. ALL DIMENSIONS SHALL BE FIELD VERIFIED.
2. ALL PERMITS, LICENSES, APPROVALS AND OTHER ARRANGEMENTS FOR WORK SHALL BE OBTAINED BY THE CONTRACTOR AT HIS OWN EXPENSE.
3. REFER TO ARCHITECTURAL DRAWINGS FOR EXACT LOCATION OF EQUIPMENT, PARTITIONS, WALLS AND GENERAL CONSTRUCTION.
4. CONTRACTOR SHALL FURNISH ALL LABOR, MATERIAL, AND EQUIPMENT NECESSARY FOR THE WORK, COMPLETE AS SHOWN ON THE DRAWINGS AND AS SPECIFIED.
5. CONTRACTOR SHALL COORDINATE DIFFUSER LOCATIONS WITH REFLECTED CEILING PLANS.
6. CONTRACTOR SHALL IDENTIFY AND INCLUDE ALL ITEMS NECESSARY FOR PROPER OPERATION OF INDICATED MECHANICAL HVAC SYSTEMS.
7. CONTRACTOR SHALL COORDINATE HIS WORK WITH THE WORK OF ALL OTHER TRADES.
8. CONTRACTOR SHALL RELOCATE ANY MINOR INTERFERENCES, INCLUDING CONDUIT, HANGERS, ETC., AT NO ADDITIONAL COST TO OWNER.
9. VOLTAGE FOR ALL EQUIPMENT IS TO BE COORDINATED WITH ELECTRICAL CONTRACTOR.
10. ALL WORK SHALL COMPLY OR EXCEED ALL APPLICABLE CODES.
11. ANY CUTTING AND PATCHING THRU RATED WALLS SHALL BE DONE AND COMPLETED AS REQUIRED TO COMPLY WITH U.L. PENETRATION RATING REQUIREMENTS.
12. PROVIDE ALL CUTTING AND PATCHING OF BUILDING MATERIALS AS REQUIRED FOR INSTALLATION OF THIS WORK.
13. PROVIDE ALL HOLES AND SLEEVES FOR INSTALLATION OF MECHANICAL WORK.
14. PROVIDE SPRING TYPE VIBRATION ISOLATORS FOR ALL SUSPENDED MECHANICAL EQUIPMENT.
15. VENTILATION CONTRACTOR SHALL PROVIDE ALL NECESSARY RISE AND DROPS IN DUCTWORK TO SATISFY FIELD CONDITIONS.
16. PROVIDE VOLUME DAMPERS ON AL BRANCH TAKE-OFFS.
17. ALL DUCT TURNS, ELBOWS, ETC., SHALL BE INSTALLED WITH TURNING VANES OR SHALL BE MINIMUM 1-1/2 RADIUS ELBOW.
18. SIZE OF BRANCH DUCT TAKE-OFF TO DIFFUSER SHALL BE EQUAL TO NECK SIZE OF THE DIFFUSER UNLESS NOTED OTHERWISE.
19. FLEXIBLE DUCT CONNECTIONS SHALL NOT EXCEED 5'-0" IN LENGTH. CONNECTIONS IN AREAS WITHOUT SUSPENDED CEILINGS SHALL BE SHEET METAL. PROVIDE SMART ELBOW WHERE BEND CAN NOT BE PROVIDED.
20. ALL TRANSFER AND EXHAUST FAN DUCTS SHALL HAVE SOUND LINING OF 1" THICKNESS. TRANSFER DUCTS SHALL NOT EXCEED 5'-0" IN LENGTH.
21. PROVIDE SHEAVE CHANGES AS REQUIRED TO MEET FINAL TEST AND BALANCE CONDITIONS AND OPERATE SYSTEMS IN A QUIET AND EFFICIENT MANNER.
22. SMOKE DETECTORS SHALL BE INSTALLED IN SUPPLY OR RETURN AIR SYSTEMS WITH A DESIGN CAPACITY GREATER THAN 2,000 CFM TIED TO THE FIRE ALARM SYSTEM.
23. INSULATE ALL CONDENSATE PIPING. SEE SPEC.
24. ALL CONDENSATE FROM HVAC EQUIPMENT SHALL BE PIPED TO THE NEAREST FLOOR DRAIN.
25. ALL DUCT DIMENSIONS INDICATED ARE FREE AREA DIMENSIONS.
26. ALL DESIGN LOADS ARE PER 2009 ASHRAE HANDBOOK.

ABBREVIATIONS

FCU	-FAN COIL UNIT
SST	-STAINLESS STEEL
EF	-EXHAUST FAN
EUH	-ELECTRIC UNIT HEATER
IH	-INFRARED HEATER
EWH	-ELECTRIC WALL HEATER
AC	-AIR CONDITIONER
CU	-CONDENSING UNIT
RL	-REFRIGERANT LIQUID
RS	-REFRIGERANT SUCTION

DESIGN BY:									
DRAWN BY:									
CHECKED BY:									
APPROVED BY:		1	7/3/2023	ISSUED FOR BID	RA	BF	GB		
CDOT/APPROVED BY:		NO.	DATE	REVISIONS	DES.	DRW.	CHK.	DCCO	CDOT

TRANSYSTEMS
222 SOUTH RIVERSIDE PLAZA SUITE 610
CHICAGO, ILLINOIS 60606

SKIDMORE, OWINGS & MERRILL LLP
224 SOUTH MICHIGAN AVENUE, SUITE 1000
CHICAGO, ILLINOIS 60604

MILHOUSE ENGINEERING & CONSTRUCTION INC
333 SOUTH WABASH AVENUE, SUITE 2901
CHICAGO, ILLINOIS 60604

EXP. 11/30/23
GEORGE E. BOURIS
062-055291
LICENSED PROFESSIONAL ENGINEER OF ILLINOIS

CHICAGO DEPARTMENT OF TRANSPORTATION
DIVISION OF ENGINEERING

STATE / LAKE LOOP ELEVATED STATION
200 NORTH STATE STREET, CHICAGO, IL 60601

SPEC. NO.

MECHANICAL SYMBOLS, NOTES & ABBREVIATIONS

DRAWING NO. M-000

CDOT PROJECT D-1-209 | DATE: 9/9/2022 | REVISION NO.1

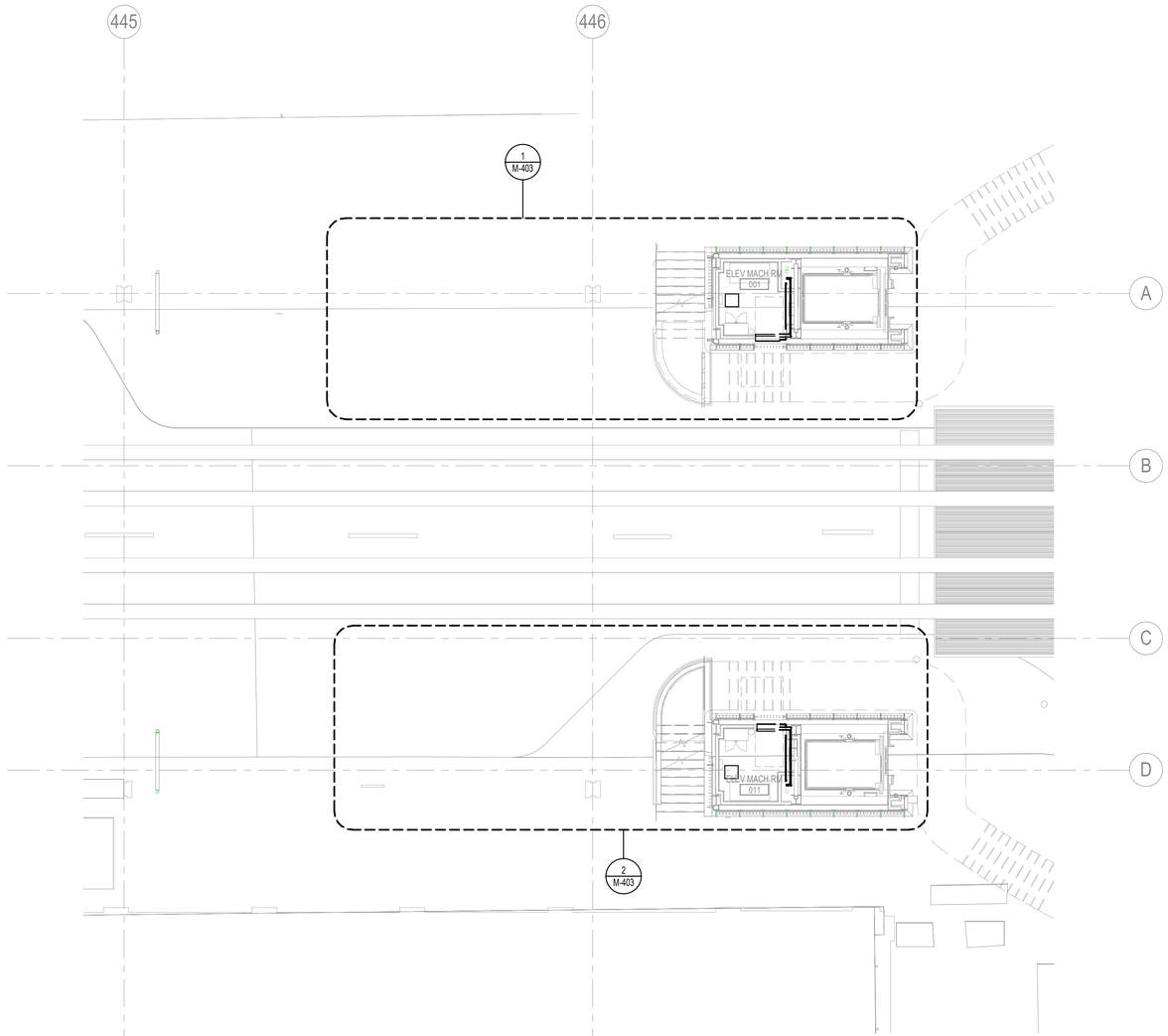

1 STREET LEVEL- MECHANICAL WEST
1/8" = 1'-0"

NO.	DATE	REVISIONS	DES.	DRW.	CHK.	DCCO	CDOT
1	7/3/2023	ISSUED FOR BID	RA	BF	GB		

DESIGN BY:
DRAWN BY:
CHECKED BY:
APPROVED BY:
CDOT/APPROVED BY:

TRANSYSTEMS
222 SOUTH RIVERSIDE PLAZA SUITE 610
CHICAGO, ILLINOIS 60606

SKIDMORE, OWINGS & MERRILL LLP
224 SOUTH MICHIGAN AVENUE, SUITE 1000
CHICAGO, ILLINOIS 60604

MILHOUSE ENGINEERING & CONSTRUCTION INC
333 SOUTH WABASH AVENUE, SUITE 2901
CHICAGO, ILLINOIS 60604

EXP. 11/30/23
GEORGE E. BOURIS
062-055291
LICENSED PROFESSIONAL ENGINEER OF ILLINOIS

CHICAGO DEPARTMENT OF TRANSPORTATION
DIVISION OF ENGINEERING

STATE / LAKE LOOP ELEVATED STATION
200 NORTH STATE STREET, CHICAGO, IL 60601

MECHANICAL - STREET LEVEL WEST

CDOT PROJECT D-1-209 | DATE: 9/9/2022

SPEC. NO.

DRAWING NO. M-100

REVISION NO. 1

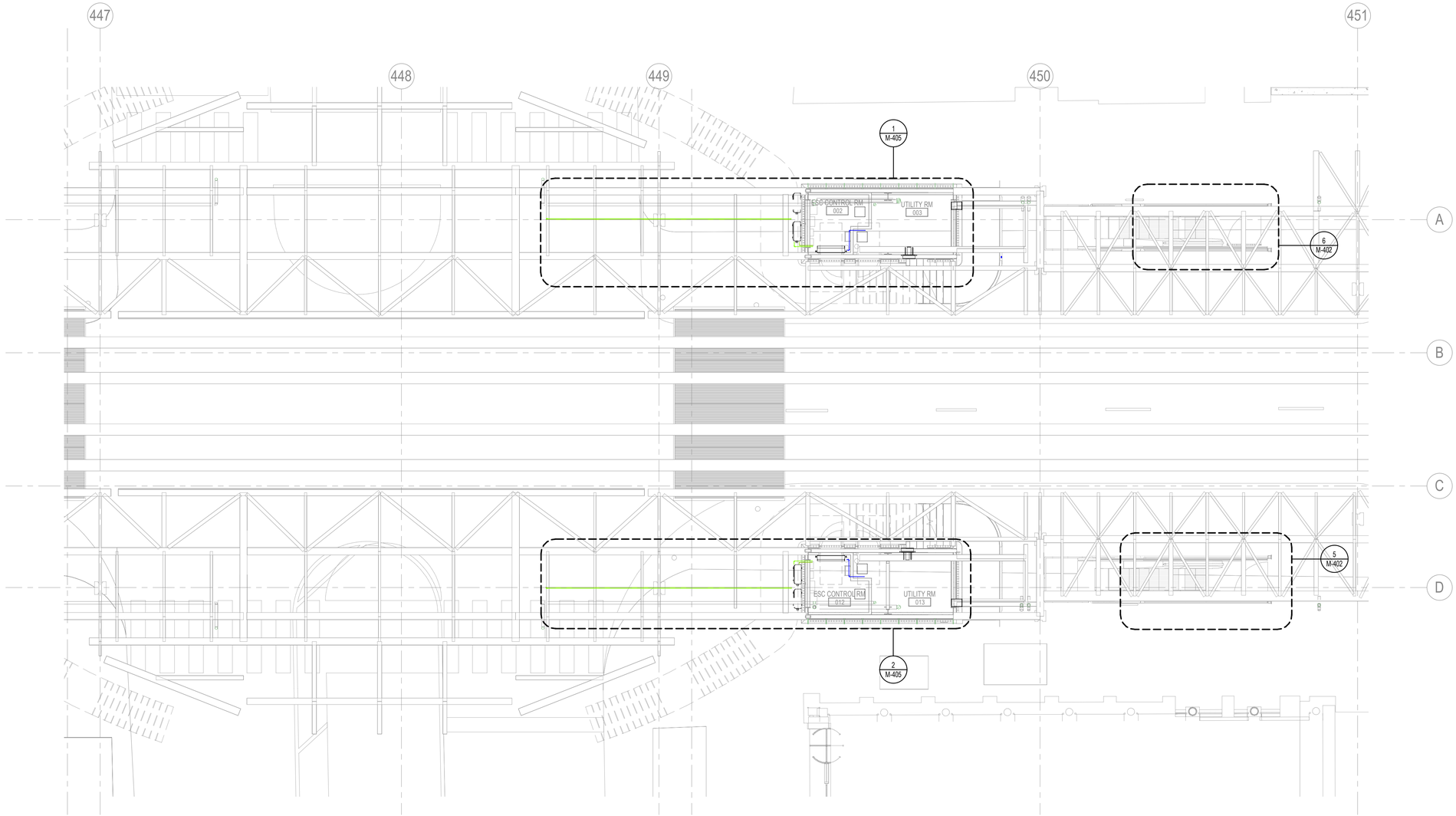

1 STREET LEVEL- MECHANICAL CENTER
1/8" = 1'-0"

DESIGN BY:										
DRAWN BY:										
CHECKED BY:										
APPROVED BY:		1	7/3/2023	ISSUED FOR BID	RA	BF	GB			
CDOT/APPROVED BY:		NO.	DATE	REVISIONS	DES.	DRW.	CHK.	DCCO	CDOT	

TRANSYSTEMS
222 SOUTH RIVERSIDE PLAZA SUITE 610
CHICAGO, ILLINOIS 60606

SKIDMORE, OWINGS & MERRILL LLP
224 SOUTH MICHIGAN AVENUE, SUITE 1000
CHICAGO, ILLINOIS 60604

MILHOUSE ENGINEERING & CONSTRUCTION INC
333 SOUTH WABASH AVENUE, SUITE 2901
CHICAGO, ILLINOIS 60604

Exp. 11/30/23
GEORGE E. BOURIS
062-055291
LICENSED PROFESSIONAL ENGINEER OF ILLINOIS

CHICAGO DEPARTMENT OF TRANSPORTATION
DIVISION OF ENGINEERING

STATE / LAKE LOOP ELEVATED STATION
200 NORTH STATE STREET, CHICAGO, IL 60601

SPEC. NO.

MECHANICAL - STREET LEVEL CENTER

DRAWING NO.
M-101

CDOT PROJECT D-1-209

DATE: 9/9/2022

REVISION NO.1

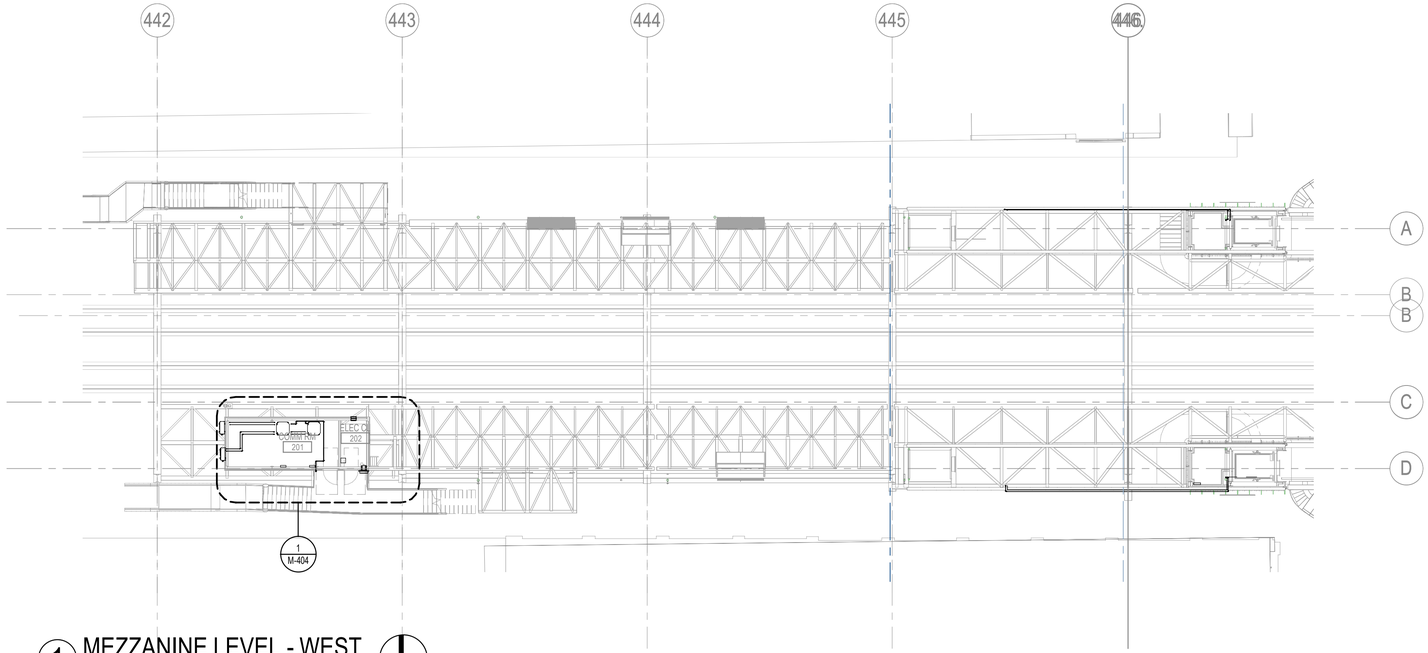

1 MEZZANINE LEVEL - WEST
1/16" = 1'-0"

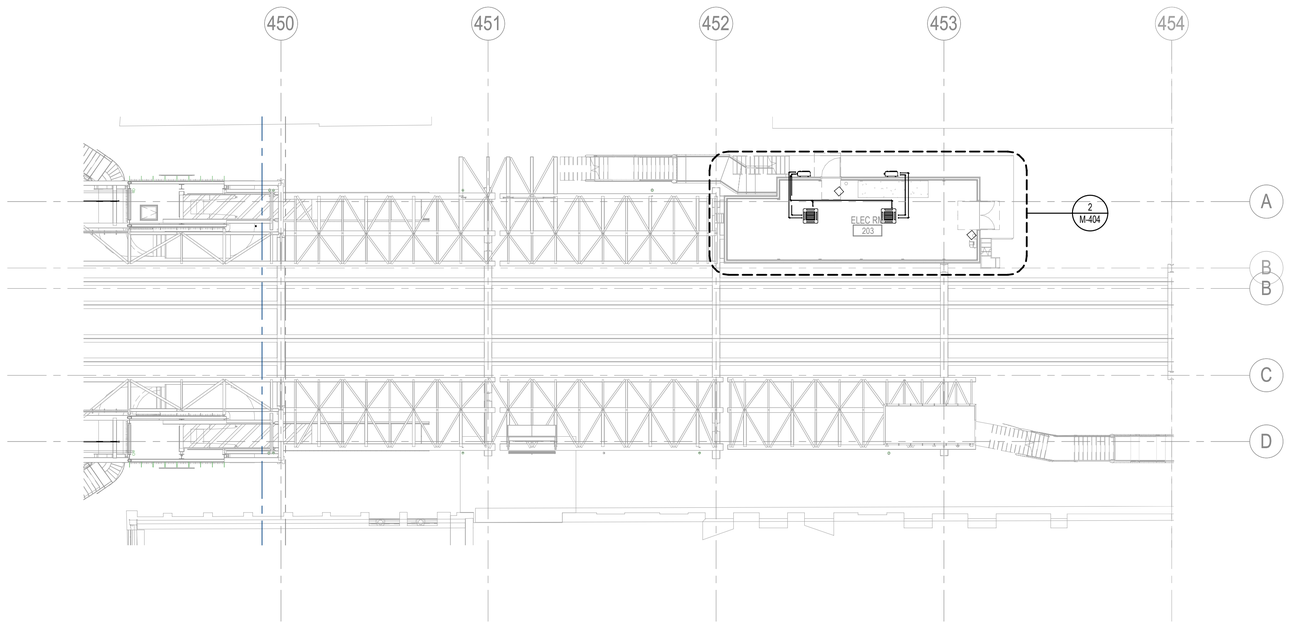

2 MEZZANINE LEVEL - EAST
1/16" = 1'-0"

1 2 3 4 5 6 7 8 9 10 11 12 13 14 15 16 17 18 19 20

F G H J K

DESIGN BY:									
DRAWN BY:									
CHECKED BY:									
APPROVED BY:		1	7/3/2023	ISSUED FOR BID	RA	BF	GB		
CDOT/APPROVED BY:		NO.	DATE	REVISIONS	DES.	DRW.	CHK.	DCCO	CDOT

TRANSYSTEMS
222 SOUTH RIVERSIDE PLAZA SUITE 610
CHICAGO, ILLINOIS 60606

SKIDMORE, OWINGS & MERRILL LLP
224 SOUTH MICHIGAN AVENUE, SUITE 1000
CHICAGO, ILLINOIS 60604

MILHOUSE ENGINEERING & CONSTRUCTION INC
333 SOUTH WABASH AVENUE, SUITE 2901
CHICAGO, ILLINOIS 60604

Exp. 11/30/23
GEORGE E. BOURIS
062-055291
LICENSED PROFESSIONAL ENGINEER OF ILLINOIS

CHICAGO DEPARTMENT OF TRANSPORTATION
DIVISION OF ENGINEERING

STATE / LAKE LOOP ELEVATED STATION
200 NORTH STATE STREET, CHICAGO, IL 60601

SPEC. NO.

MECHANICAL - MEZZANINE LEVEL

DRAWING NO.
M-102

CDOT PROJECT D-1-209

DATE: 9/9/2022

REVISION NO. 1

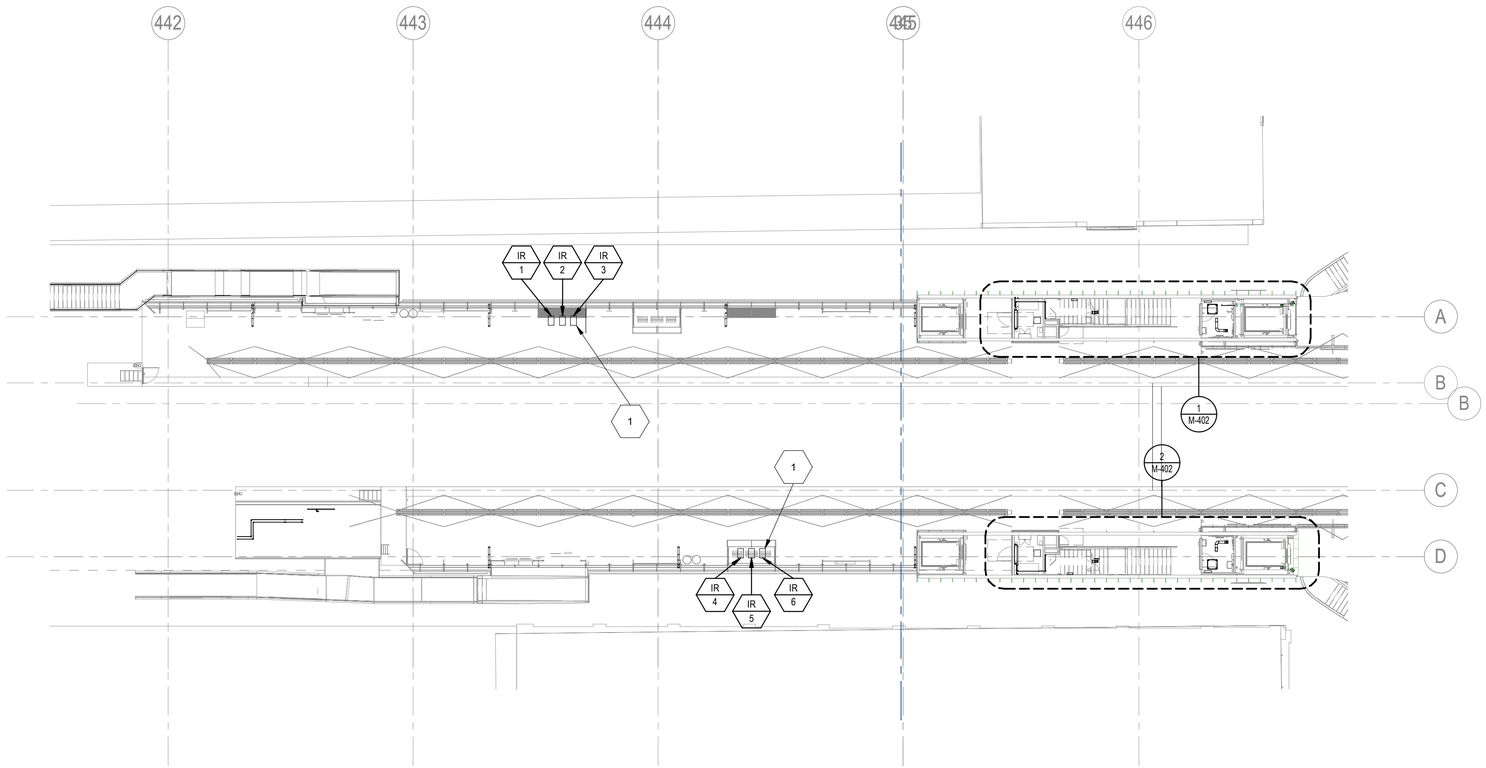

1 PLATFORM LEVEL - MECHANICAL WEST
1/16" = 1'-0"

Keynote Legend

Key Value	Keynote Text
1	REFER TO ELECTRICAL DRAWINGS FOR LOCATION OF PUSH BUTTON CONTROL OF INFARED HEATERS.

DESIGN BY:										
DRAWN BY:										
CHECKED BY:										
APPROVED BY:		1	7/3/2023	ISSUED FOR BID	RA	BF	GB			
CDOT/APPROVED BY:		NO.	DATE	REVISIONS	DES.	DRW.	CHK.	DCCO	CDOT	

TRANSYSTEMS
222 SOUTH RIVERSIDE PLAZA SUITE 610
CHICAGO, ILLINOIS 60606

SKIDMORE, OWINGS & MERRILL LLP
224 SOUTH MICHIGAN AVENUE, SUITE 1000
CHICAGO, ILLINOIS 60604

MILHOUSE ENGINEERING & CONSTRUCTION INC
333 SOUTH WABASH AVENUE, SUITE 2901
CHICAGO, ILLINOIS 60604

EXP. 11/30/23
GEORGE E. BOURNIAS
062-055291
LICENSED PROFESSIONAL ENGINEER OF ILLINOIS

CHICAGO DEPARTMENT OF TRANSPORTATION
DIVISION OF ENGINEERING

STATE / LAKE LOOP ELEVATED STATION
200 NORTH STATE STREET, CHICAGO, IL 60601

MECHANICAL - PLATFORM LEVEL WEST

CDOT PROJECT D-1-209

DATE: 9/9/2022

SPEC. NO.

DRAWING NO. M-103

REVISION NO. 1

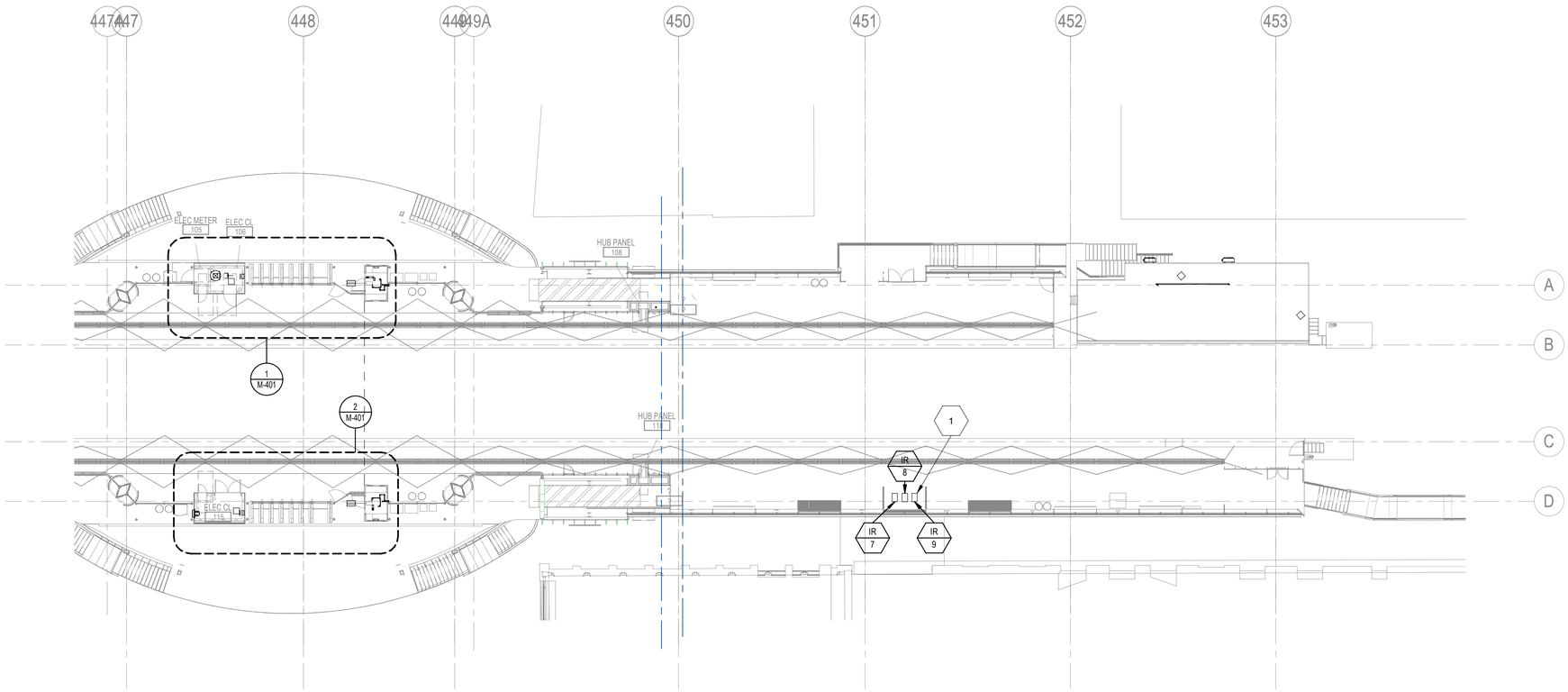

1 PLATFORM LEVEL - MECHANICAL EAST
1/16" = 1'-0"

Keynote Legend

Key Value	Keynote Text
1	REFER TO ELECTRICAL DRAWINGS FOR LOCATION OF PUSH BUTTON CONTROL OF INFARED HEATERS.

DESIGN BY:										
DRAWN BY:										
CHECKED BY:										
APPROVED BY:		1	7/3/2023	ISSUED FOR BID	RA	BF	GB			
CDOT/APPROVED BY:		NO.	DATE	REVISIONS	DES.	DRW.	CHK.	DCCO	CDOT	

TRANSYSTEMS
222 SOUTH RIVERSIDE PLAZA SUITE 610
CHICAGO, ILLINOIS 60606

SKIDMORE, OWINGS & MERRILL LLP
224 SOUTH MICHIGAN AVENUE, SUITE 1000
CHICAGO, ILLINOIS 60604

MILHOUSE ENGINEERING & CONSTRUCTION INC
333 SOUTH WABASH AVENUE, SUITE 2901
CHICAGO, ILLINOIS 60604

EXP. 11/30/23
GEORGE E. BOURNIA
062-055291
LICENSED PROFESSIONAL ENGINEER OF ILLINOIS

CHICAGO DEPARTMENT OF TRANSPORTATION
DIVISION OF ENGINEERING

STATE / LAKE LOOP ELEVATED STATION
200 NORTH STATE STREET, CHICAGO, IL 60601

MECHANICAL - PLATFORM LEVEL EAST

CDOT PROJECT D-1-209 | DATE: 9/9/2022

SPEC. NO.

DRAWING NO. M-104

REVISION NO. 1

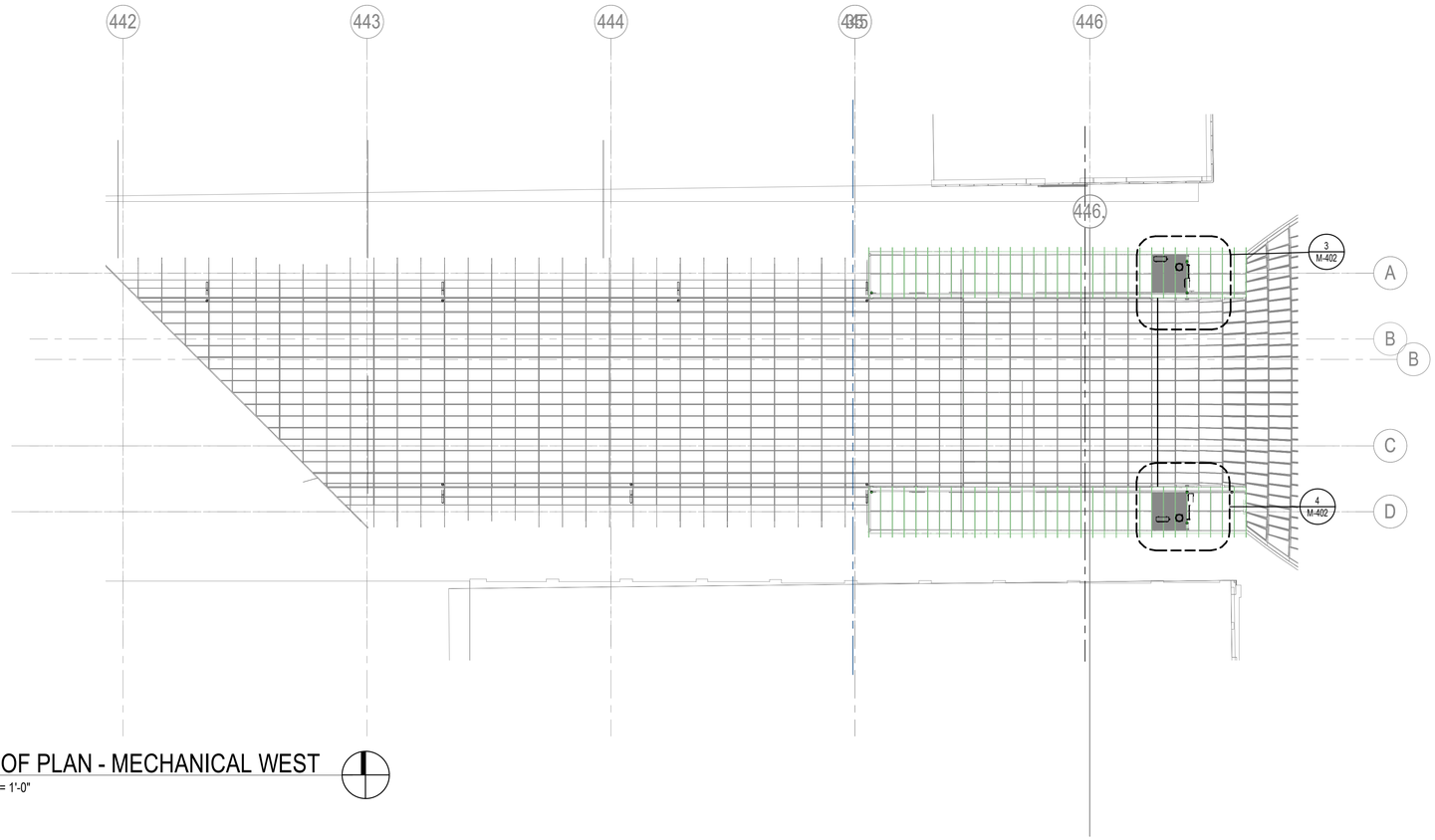

1 ROOF PLAN - MECHANICAL WEST
1/16" = 1'-0"

DESIGN BY:										
DRAWN BY:										
CHECKED BY:										
APPROVED BY:		1	7/3/2023	ISSUED FOR BID	RA	BF	GB			
CDOT/APPROVED BY:		NO.	DATE	REVISIONS	DES.	DRW.	CHK.	DCCO	CDOT	

TRANSYSTEMS
222 SOUTH RIVERSIDE PLAZA SUITE 610
CHICAGO, ILLINOIS 60606

SKIDMORE, OWINGS & MERRILL LLP
224 SOUTH MICHIGAN AVENUE, SUITE 1000
CHICAGO, ILLINOIS 60604

MILHOUSE ENGINEERING & CONSTRUCTION INC
333 SOUTH WABASH AVENUE, SUITE 2901
CHICAGO, ILLINOIS 60604

EXP. 11/30/23
GEORGE E. BOUIS
062-055291
LICENSED PROFESSIONAL ENGINEER OF ILLINOIS

CHICAGO DEPARTMENT OF TRANSPORTATION
DIVISION OF ENGINEERING

STATE / LAKE LOOP ELEVATED STATION
200 NORTH STATE STREET, CHICAGO, IL 60601

MECHANICAL ROOF LEVEL WEST

CDOT PROJECT D-1-209 | DATE: 9/9/2022

SPEC. NO.

DRAWING NO.
M-105

REVISION NO. 1

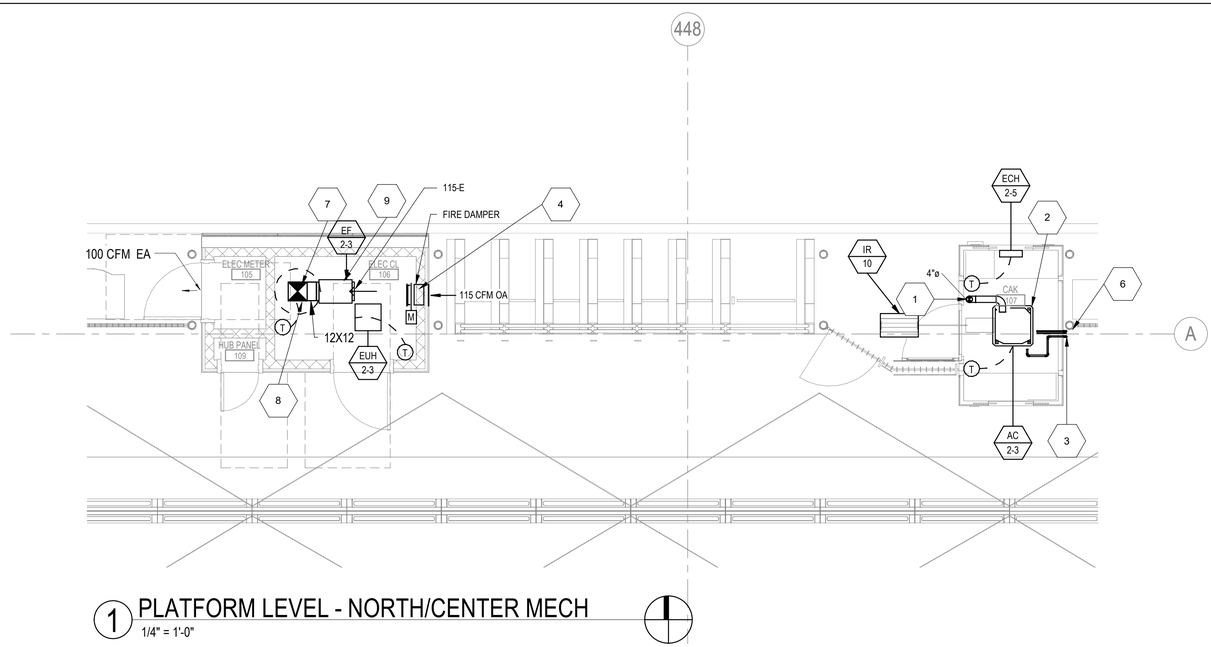

1 PLATFORM LEVEL - NORTH/CENTER MECH
1/4" = 1'-0"

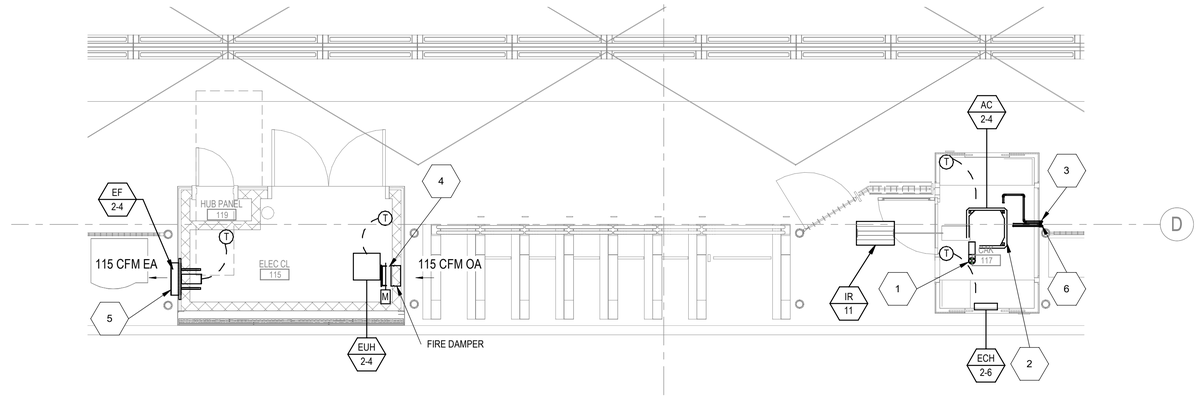

2 PLATFORM LEVEL - SOUTH/CENTER MECH
1/4" = 1'-0"

Keynote Legend

Key Value	Keynote Text
1	100 CFM OA, 4" DIA. OA DUCT UP THROUGH CEILING. TERMINATE WITH GOOSENECK AND INSECT SCREEN.
2	NEW AC UNIT LOCATE ABOVE GRATED CEILING.
3	1" CONDENSATE DRAIN LINE RUN FROM AC UNIT TO FUNNEL DRAIN.
4	PROVIDE WITH NEW 115 CFM, 12x12 OAI LOUVER 50% FREE AREA WITH AUTO DAMPER INTERLOCKED DAMPER W/ ASOCIATED EXH FAN. PROVIDE NEW FIRE DAMPER
5	NEW WALL EXHAUST FAN ON 10.5x10.5 WALL OPENING. PROVIDE LOUVER COVER.
6	5/8" RS AND 3/8"RL DOWN TO STREET LEVEL.
7	NEW 12"x12" E.A. DUCT UP TO RELIEF HOOD ON ROOF.
8	RELIEF HOOD ON ROOF. PROVIDE WITH MOTORIZED DAMPER INTERLOCKED WITH EXH FAN. RELIEF HOOD SHALL BE EQUAL TO GREENHECK GSRS-12, 0.82 S.F. THROUGH AREA WITH MOTORIZED DAMPERS, INSECT SCREEN, FLASHING FLANGE.
9	NEW IN-LINE EXH FAN TO BE SUPPORTED FROM CEILING.

DESIGN BY:										
DRAWN BY:										
CHECKED BY:										
APPROVED BY:		1	7/3/2023	ISSUED FOR BID	RA	BF	GB			
CDOT/APPROVED BY:		NO.	DATE	REVISIONS	DES.	DRW.	CHK.	DCCO	CDOT	

TRANSYSTEMS
222 SOUTH RIVERSIDE PLAZA SUITE 610
CHICAGO, ILLINOIS 60606

SKIDMORE, OWINGS & MERRILL LLP
224 SOUTH MICHIGAN AVENUE, SUITE 1000
CHICAGO, ILLINOIS 60604

MILHOUSE ENGINEERING & CONSTRUCTION INC
333 SOUTH WABASH AVENUE, SUITE 2901
CHICAGO, ILLINOIS 60604

Exp. 11/30/23
GEORGE E. ROUSSOS
062-055291
LICENSED PROFESSIONAL ENGINEER OF ILLINOIS

CHICAGO DEPARTMENT OF TRANSPORTATION
DIVISION OF ENGINEERING

STATE / LAKE LOOP ELEVATED STATION
200 NORTH STATE STREET, CHICAGO, IL 60601

SPEC. NO.

ENLARGED MECHANICAL AREAS

DRAWING NO.
M-401

CDOT PROJECT D-1-209

DATE: 9/9/2022

REVISION NO.1

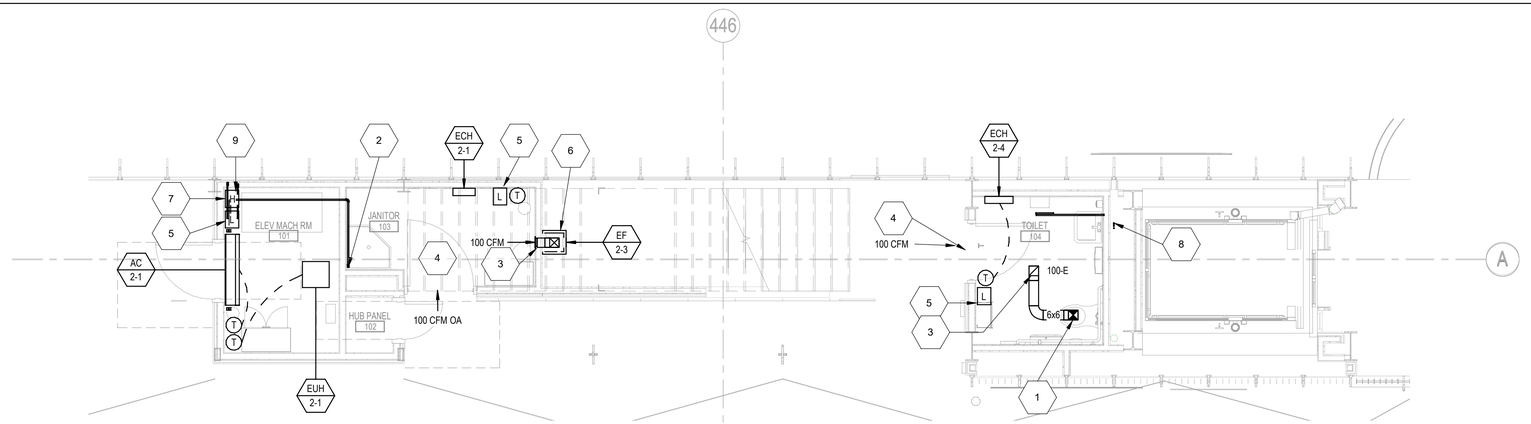

1 PLATFORM LEVEL - NORTH/EAST MECH

1/4" = 1'-0"

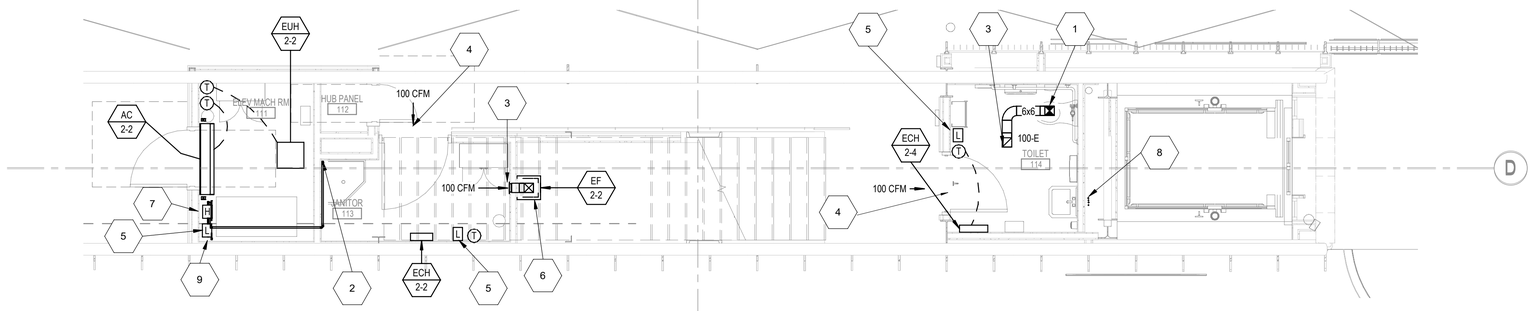

2 PLATFORM LEVEL - SOUTH/WEST MECH

1/4" = 1'-0"

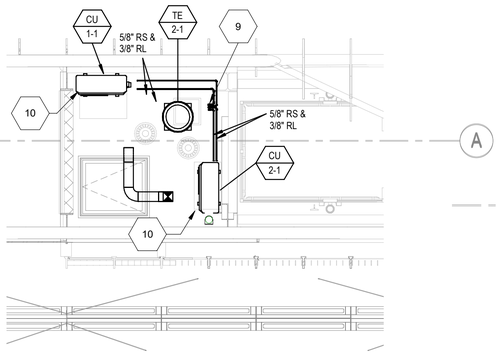

3 ROOF PLAN - NORTH/WEST SIDE MECH

1/4" = 1'-0"

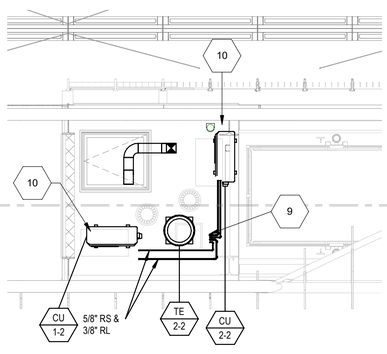

4 ROOF PLAN - SOUTH/WEST SIDE MECH

1/4" = 1'-0"

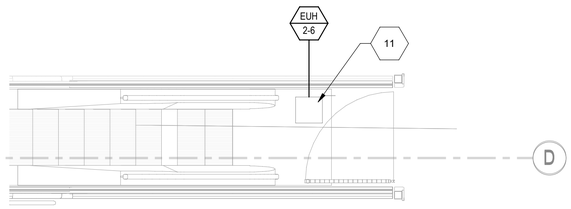

5 STREET LEVEL- SOUTHEAST/ESCALATOR PIT

1/4" = 1'-0"

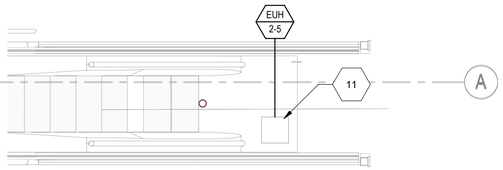

6 STREET LEVEL- NORTHEAST/ESCALATOR PIT

1/4" = 1'-0"

Keynote Legend

Key Value	Keynote Text
1	6x6 DUCT UP TO EXH FAN ON ROOF.
2	3/4" CONDENSATE DRAIN DOWN.
3	6x6 EXH GRILLE. 100 CFM-E. EQUAL TO THE 350RL.
4	100 CFM OA THROUGH DOOR LOUVER
5	LOW TEMPERATURE SENSOR WITH AUDIO/VISUAL ALARM, EC TO PROVIDE WIRING TO THE RELAY CONTROL PANEL. SEE TEMP ALARM SCHEDULE FOR MORE INFO. SEE DRAWING M-602
6	6x6 DUCT DOWN LOCATE EXH FAN IN THE RISER. TERMINATE DUCTWORK ON THE CEILING OF THE FLOOR BELOW WITH A 6x6 GRILLE, EQUAL TO TITUS 350 RL.
7	HIGH TEMPERATURE ALARM SWITCH. EC TO PROVIDE WIRING TO THE RELAY CONTROL PANEL. SEE TEMP ALARM SCHEDULE FOR MORE INFO.
8	(2)5/8" RS & (2)3/8" RL REFRIGERANT PIPES DOWN TO STREET LEVEL AND UP THROUGH ROOF.
9	5/8" RS & 3/8" RL REFRIGERANT PIPING DOWN.
10	CONDENSING UNIT. MOUNTED ROOF CURB AT LEAST 4'-0" HIGH.
11	UNIT HEATER IN ESCALATOR PIT.

DESIGN BY:										
DRAWN BY:										
CHECKED BY:										
APPROVED BY:		1	7/3/2023	ISSUED FOR BID	RA	BF	GB			
CDOT/APPROVED BY:		NO.	DATE	REVISIONS	DES.	DRW.	CHK.	DCCO	CDOT	

TRANSYSTEMS
222 SOUTH RIVERSIDE PLAZA SUITE 610
CHICAGO, ILLINOIS 60606

SKIDMORE, OWINGS & MERRILL LLP
224 SOUTH MICHIGAN AVENUE, SUITE 1000
CHICAGO, ILLINOIS 60604

MILHOUSE ENGINEERING & CONSTRUCTION INC
333 SOUTH WABASH AVENUE, SUITE 2901
CHICAGO, ILLINOIS 60604

EXP. 11/30/23
GEORGE E. BOURNIAS
062-055291
LICENSED PROFESSIONAL ENGINEER OF ILLINOIS

CHICAGO DEPARTMENT OF TRANSPORTATION
DIVISION OF ENGINEERING

STATE / LAKE LOOP ELEVATED STATION
200 NORTH STATE STREET, CHICAGO, IL 60601

SPEC. NO.

ENLARGED MECHANICAL AREAS

DRAWING NO.
M-402

CDOT PROJECT D-1-209

DATE: 9/9/2022

REVISION NO.1

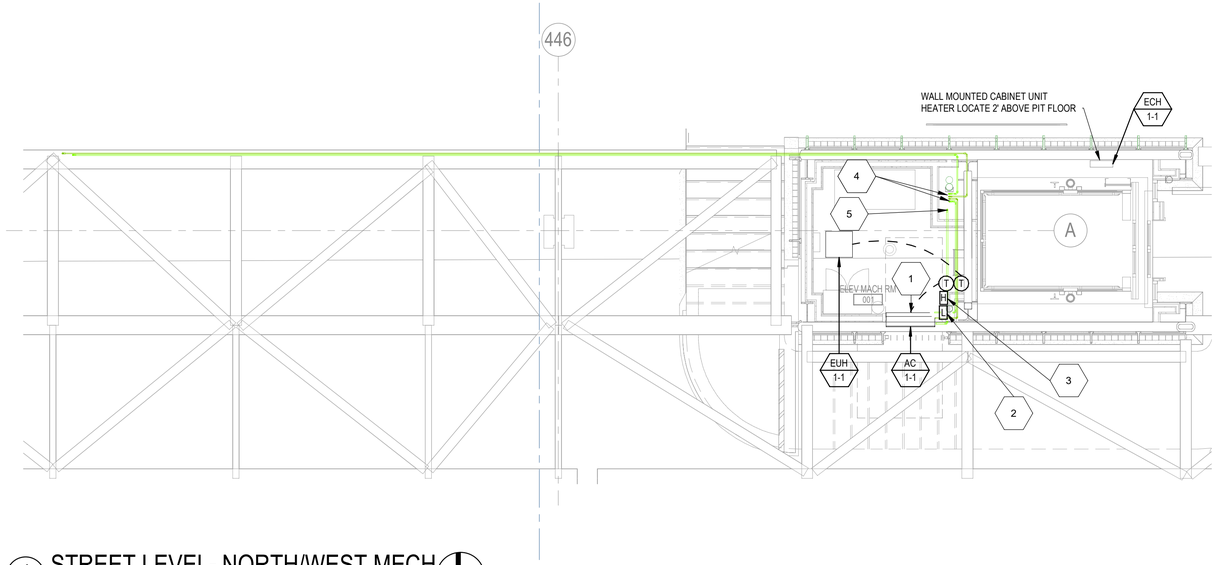

1 STREET LEVEL- NORTH/WEST MECH
1/4" = 1'-0"

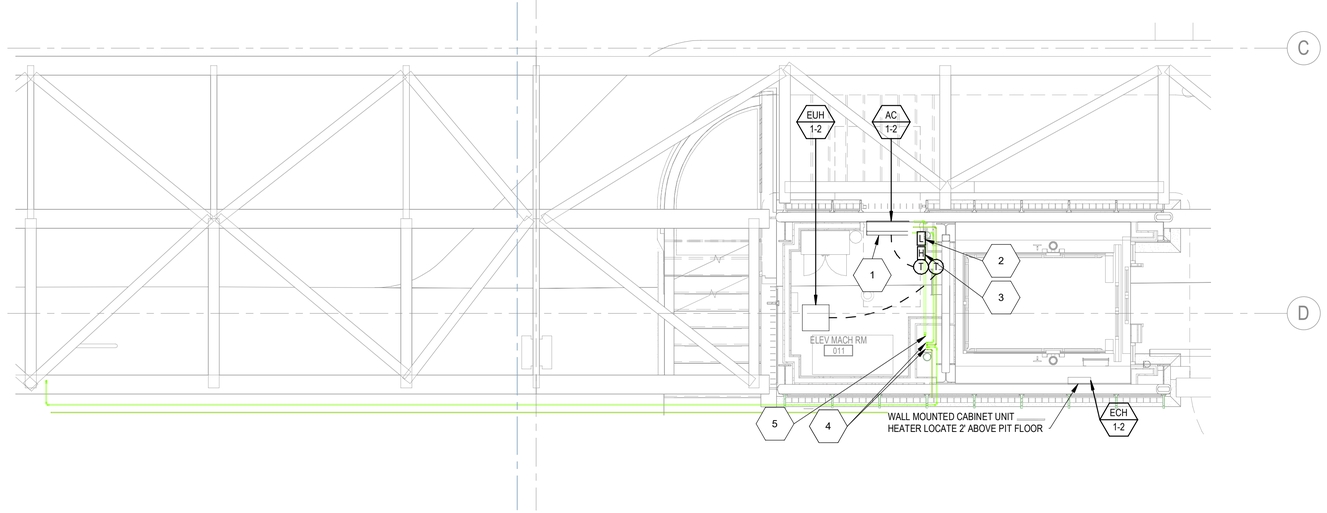

2 STREET LEVEL- SOUTH/WEST MECH
1/4" = 1'-0"

Keynote Legend

Key Value	Keynote Text
1	AC UNIT TO BE SUPPORTED FROM THE WALL ABOVE DOOR.
2	LOW TEMPERATURE SENSOR WITH AUDIO/VISUAL ALARM, EC TO PROVIDE WIRING TO THE RELAY CONTROL PANEL. SEE TEMP ALARM SCHEDULE FOR MORE INFO. SEE DRAWING M-602
3	HIGH TEMPERATURE ALARM SWITCH. EC TO PROVIDE WIRING TO THE RELAY CONTROL PANEL. SEE TEMP ALARM SCHEDULE FOR MORE INFO.
4	5/8" RS AND 3/8"RL UP TO FLOOR PLATFORM.
5	1" CONDENSATE DRAIN LINE RUN FROM AC UNIT TO FUNNEL DRAIN.

DESIGN BY:									
DRAWN BY:									
CHECKED BY:									
APPROVED BY:		1	7/3/2023	ISSUED FOR BID	RA	BF	GB		
CDOT/APPROVED BY:		NO.	DATE	REVISIONS	DES.	DRW.	CHK.	DCCO	CDOT

TRANSYSTEMS
222 SOUTH RIVERSIDE PLAZA SUITE 610
CHICAGO, ILLINOIS 60606

SKIDMORE, OWINGS & MERRILL LLP
224 SOUTH MICHIGAN AVENUE, SUITE 1000
CHICAGO, ILLINOIS 60604

MILHOUSE ENGINEERING & CONSTRUCTION INC
333 SOUTH WABASH AVENUE, SUITE 2901
CHICAGO, ILLINOIS 60604

EXP. 11/30/23
GEORGE E. BOURNIAS
062-055291
LICENSED PROFESSIONAL ENGINEER OF ILLINOIS

CHICAGO DEPARTMENT OF TRANSPORTATION
DIVISION OF ENGINEERING

STATE / LAKE LOOP ELEVATED STATION
200 NORTH STATE STREET, CHICAGO, IL 60601

ENLARGED MECHANICAL AREAS

CDOT PROJECT D-1-209

DATE: 9/9/2022

SPEC. NO.

DRAWING NO. M-403

REVISION NO.1

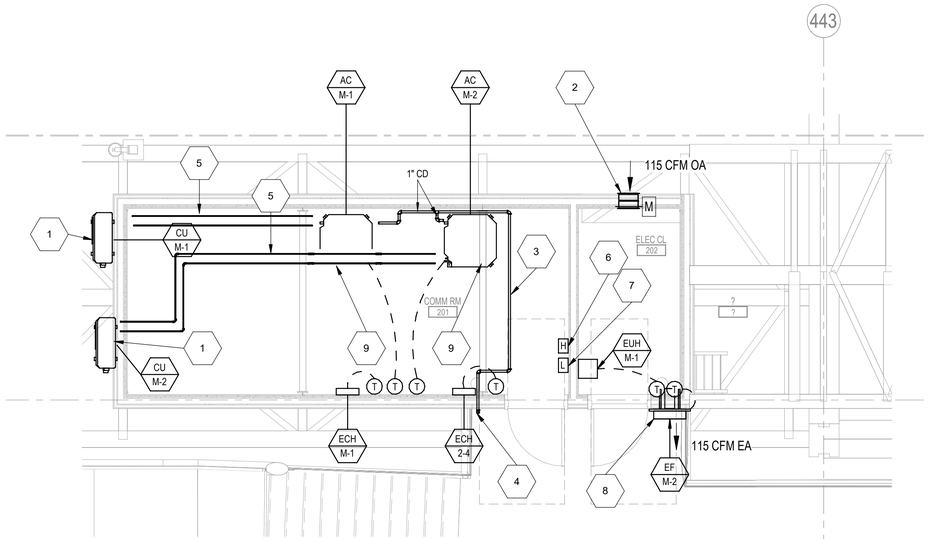

1 MEZZANINE LEVEL - COMM. RM MECH

1/4" = 1'-0"

Keynote Legend	
Key Value	Keynote Text
1	CONDENSING UNIT TO BE SUPPORTED FROM THE WALL AT 9'-0" ABOVE FINISHED FLOOR.
2	PROVIDE WITH NEW 115 CFM, 12x12 OAI LOUVER 50% FREE AREA WITH AUTO DAMPER INTERLOCKED DAMPER W/ ASOCIATED EXH FAN. PROVIDE NEW FIRE DAMPER
3	1" CONDENSATE DRAIN LINE, WITH 4" DEEP DRAIN PAN UNDERNEATH. DRAIN PAN SHALL BE 3" WIDER ON EACH SIDE OF THE PIPE. DO NOT RUN PIPE OVER ELECTRICAL EQUIPMENT. COORDINATE WITH ELECTRICIAN.
4	1" CONDENSATE DRAIN DOWN TO OPEN SITE DRAIN. SEE PLUMBING DRAWINGS FOR EXACT LOCATION.
5	5/8" RS & 3/8" RL REFRIGERANT PIPING.
6	HIGH TEMPERATURE ALARM SWITCH. EC TO PROVIDE WIRING TO THE RELAY CONTROL PANEL. SEE TEMP ALARM SCHEDULE FOR MORE INFO.
7	LOW TEMPERATURE SENSOR WITH AUDIO/VISUAL ALARM, EC TO PROVIDE WIRING TO THE RELAY CONTROL PANEL. SEE TEMP ALARM SCHEDULE FOR MORE INFO. SEE DRAWING M-602
8	NEW WALL EXHAUST FAN ON 10.5x10.5 WALL OPENING. PROVIDE LOUVER COVER.
9	AC UNIT TO BE SUPPORTED FROM THE CEILING.

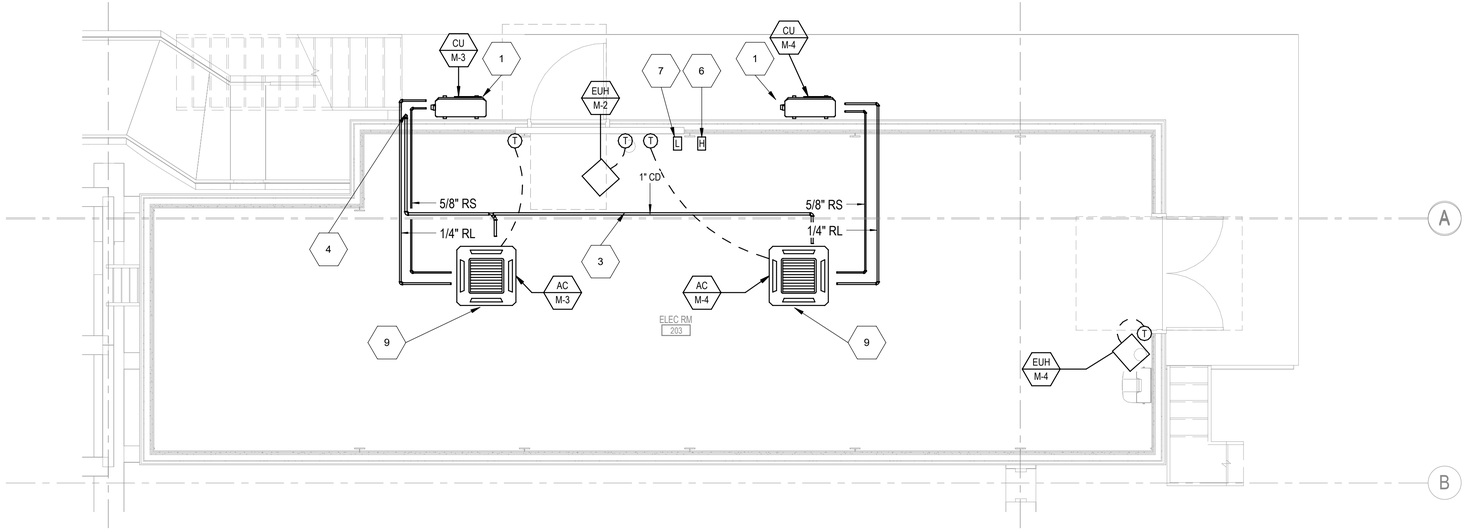

2 MEZZANINE LEVEL - EAST ELECTRICAL ROOM MECH

1/4" = 1'-0"

NO.	DATE	REVISIONS	DES.	DRW.	CHK.	DCCO	CDOT
1	7/3/2023	ISSUED FOR BID	RA	BF	GB		

DESIGN BY:
DRAWN BY:
CHECKED BY:
APPROVED BY:
CDOT/APPROVED BY:

TRANSYSTEMS
222 SOUTH RIVERSIDE PLAZA SUITE 610
CHICAGO, ILLINOIS 60606

SKIDMORE, OWINGS & MERRILL LLP
224 SOUTH MICHIGAN AVENUE, SUITE 1000
CHICAGO, ILLINOIS 60604

MILHOUSE ENGINEERING & CONSTRUCTION INC
333 SOUTH WABASH AVENUE, SUITE 2901
CHICAGO, ILLINOIS 60604

Exp. 11/30/23
GEORGE E. BOURNIAS
062-055291
LICENSED PROFESSIONAL ENGINEER OF ILLINOIS

CHICAGO DEPARTMENT OF TRANSPORTATION
DIVISION OF ENGINEERING

STATE / LAKE LOOP ELEVATED STATION
200 NORTH STATE STREET, CHICAGO, IL 60601

ENLARGED MECHANICAL AREAS

CDOT PROJECT D-1-209

DATE: 9/9/2022

SPEC. NO.

DRAWING NO. M-404

REVISION NO.1

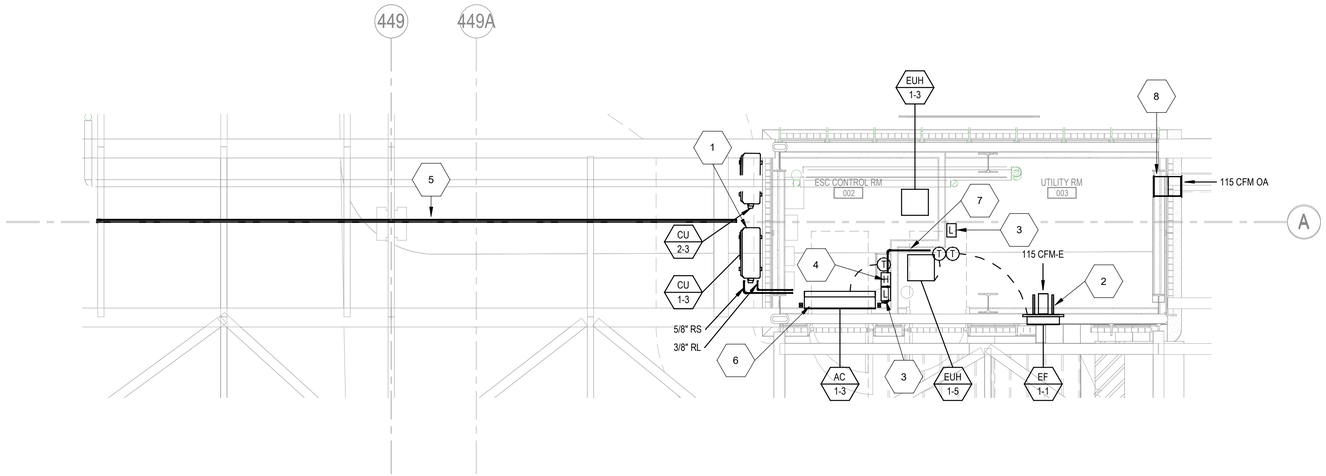

1 STREET LEVEL- NORTHEAST/CENTER MECH

1/4" = 1'-0"

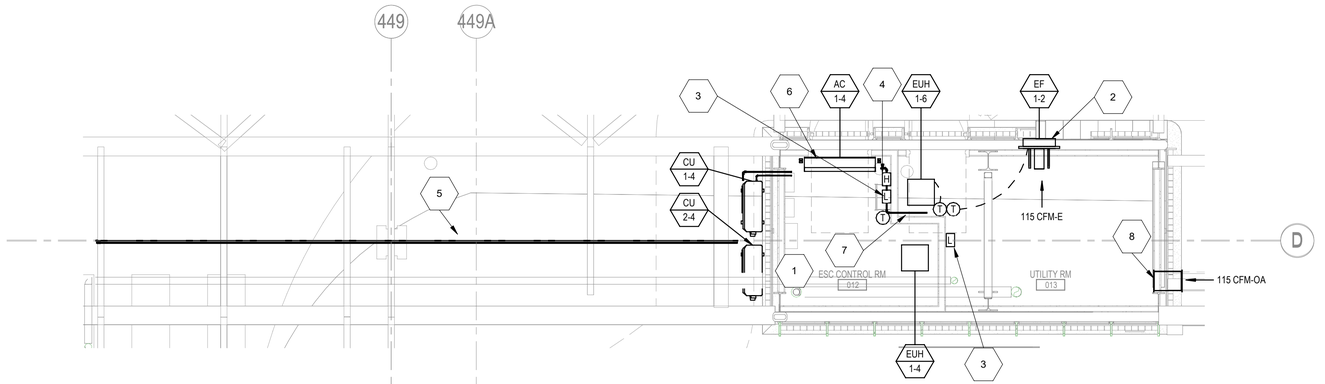

2 STREET LEVEL- SOUTHEAST/CENTER MECH

1/4" = 1'-0"

Keynote Legend	
Key Value	Keynote Text
1	CONDENSING UNIT TO BE SUPPORTED FROM THE WALL AT 9'-0" ABOVE FINISHED FLOOR.
2	NEW WALL EXHAUST FAN ON 10.5x10.5 WALL OPENING. PROVIDE LOUVER COVER. INSTALL 3' ABOVE FLOOR.
3	LOW TEMPERATURE SENSOR WITH AUDIO/VISUAL ALARM. EC TO PROVIDE WIRING TO THE RELAY CONTROL PANEL. SEE TEMP ALARM SCHEDULE FOR MORE INFO. SEE DRAWING M-602
4	HIGH TEMPERATURE ALARM SWITCH. EC TO PROVIDE WIRING TO THE RELAY CONTROL PANEL. SEE TEMP ALARM SCHEDULE FOR MORE INFO.
5	5/8" RS & 3/8" RL REFRIGERANT PIPING.
6	WALL MOUNTED AC UNIT. MOUNT ABOVE DOOR.
7	1" CONDENSATE DN TO OPEN SITE DRAIN.
8	PROVIDE WITH NEW 115 CFM, 12x12 OAI LOUVER. 50% FREE AREA WITH AUTO DAMPER INTERLOCKED DAMPER W/ ASOCIATED EXH FAN. PROVIDE NEW FIRE DAMPER

DESIGN BY:										
DRAWN BY:										
CHECKED BY:										
APPROVED BY:		1	7/3/2023	ISSUED FOR BID	RA	BF	GB			
CDOT/APPROVED BY:		NO.	DATE	REVISIONS	DES.	DRW.	CHK.	DCCO	CDOT	

TRANSYSTEMS
222 SOUTH RIVERSIDE PLAZA SUITE 610
CHICAGO, ILLINOIS 60606

SKIDMORE, OWINGS & MERRILL LLP
224 SOUTH MICHIGAN AVENUE, SUITE 1000
CHICAGO, ILLINOIS 60604

MILHOUSE ENGINEERING & CONSTRUCTION INC
333 SOUTH WABASH AVENUE, SUITE 2901
CHICAGO, ILLINOIS 60604

EXP. 11/30/23
062-055291
LICENSED PROFESSIONAL ENGINEER OF ILLINOIS

CHICAGO DEPARTMENT OF TRANSPORTATION
DIVISION OF ENGINEERING

STATE / LAKE LOOP ELEVATED STATION
200 NORTH STATE STREET, CHICAGO, IL 60601

SPEC. NO.

ENLARGED MECHANICAL AREAS

DRAWING NO.
M-405

CDOT PROJECT D-1-209

DATE: 9/9/2022

REVISION NO. 1

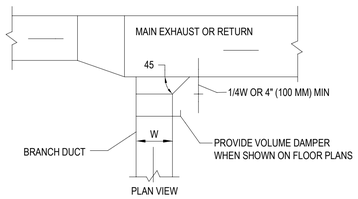

DESIGNER'S NOTE: SHOW VOLUME DAMPERS ON FLOOR PLANS

1 EXHAUST OR RETURN BRANCH DUCTWORK
NOT TO SCALE

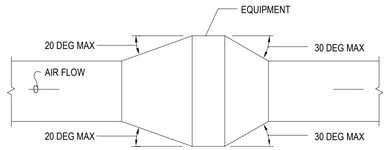

PLAN OR SIDE VIEW

NOTE:
UNLESS OTHERWISE INDICATED ON PLANS, MAXIMUM ANGLES SHOWN SHALL APPLY.

DESIGNER'S NOTE:
WHEN SPACE DOES NOT PERMIT ANGLES SHWON ABOVE, DESIGNER SHOULD SHOW MAXIMUM ALLOWABLE ANGLE ON PLANS.

2 TYPICAL DUCTWORK TRANSITION WITH EQUIPMENT MOUNTED IN DUCT
NOT TO SCALE

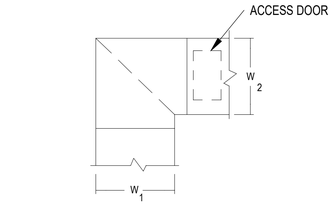

NOTE:

1. ALL VANED ELBOWS SHALL BE CONSTRUCTED AND INSTALLED AS DETAILED BY SMACNA.
2. WHEN W1 DOES NOT EQUAL W2 VANE SHALL BE SINGLE VANE TYPE REGARDLESS OF W DIMENSION
3. ALL SINGLE VANES SHALL HAVE A 2" (50 MM) RADIUS, 1 1/2" (40 MM) MAXIMUM SPACE BETWEEN VANES AND A 3/4" (20 MM) TRAILING EDGE.
4. WHEN W1 EQUALS W2 AND W IS GREATER THAN 20" (500 MM) VANES SHALL BE DOUBLE VANE TYPE.

3 DUCTWORK SQUARE VANED ELBOWS
NOT TO SCALE

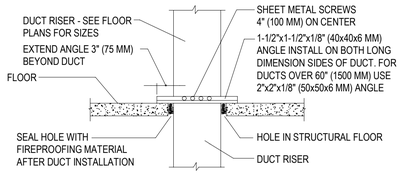

4 LOW PRESSURE DUCT RISER SUPPORT
NOT TO SCALE

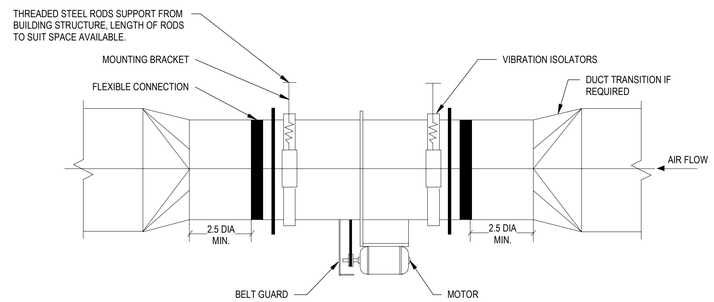

NOTE:
LOCATION OF FAN MOTOR MAY VARY, SEE DRAWINGS AND OR SCHEDULE FOR EXACT LOCATION.

5 IN-LINE FAN DETAIL
NOT TO SCALE

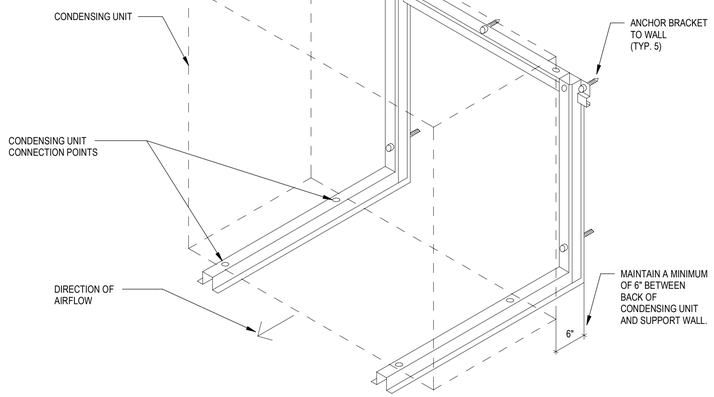

6 CONDENSING UNIT WALL BRACKET DETAIL
NOT TO SCALE

DESIGN BY:										
DRAWN BY:										
CHECKED BY:										
APPROVED BY:		1	7/3/2023	ISSUED FOR BID	RA	BF	GB			
CDOT/APPROVED BY:		NO.	DATE	REVISIONS	DES.	DRW.	CHK.	DCCO	CDOT	

TRANSYSTEMS
222 SOUTH RIVERSIDE PLAZA SUITE 610
CHICAGO, ILLINOIS 60606

SKIDMORE, OWINGS & MERRILL LLP
224 SOUTH MICHIGAN AVENUE, SUITE 1000
CHICAGO, ILLINOIS 60604

MILHOUSE ENGINEERING & CONSTRUCTION INC
333 SOUTH WABASH AVENUE, SUITE 2901
CHICAGO, ILLINOIS 60604

Exp. 11/30/23
GEORGE E. ROUSH
062-055291
LICENSED PROFESSIONAL ENGINEER OF ILLINOIS

CHICAGO DEPARTMENT OF TRANSPORTATION
DIVISION OF ENGINEERING

STATE / LAKE LOOP ELEVATED STATION
200 NORTH STATE STREET, CHICAGO, IL 60601

SPEC. NO.

MECHANICAL DETAILS

DRAWING NO.
M-501

CDOT PROJECT D-1-209

DATE: 9/9/2022

REVISION NO.1

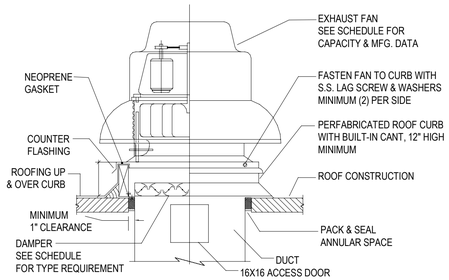

NOTE:

1. FOR CONTRUSTION WITH INSULATION ABOVE ROOF SLAB, DECK, ETC. SUPPORT CURB DIRECTLY ON ROOF STRUCTURE.
2. COORDINGATION INSTALLATION OF ROOF CURB WITH LANDLORD'S ROOFING CONTRACTOR TO MAINTAIN WARRANTY.

3 ROOF EXHAUST FAN
NOT TO SCALE

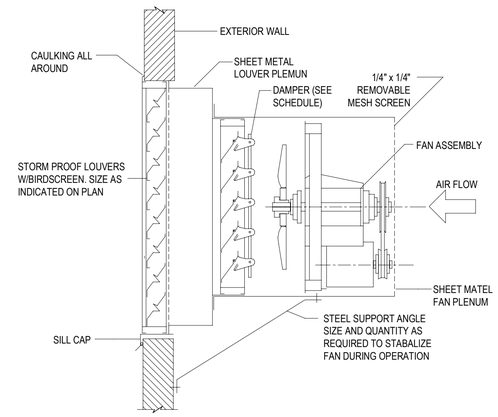

4 TYPICAL SIDEWALL FAN DETAIL
NOT TO SCALE

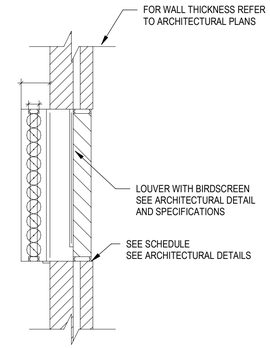

5 EXTERIOR WALL LOUVER WITH DAMPER DETAIL
NOT TO SCALE
NOTE: ALL LOUVERS SGALL HAVE 50% FA.

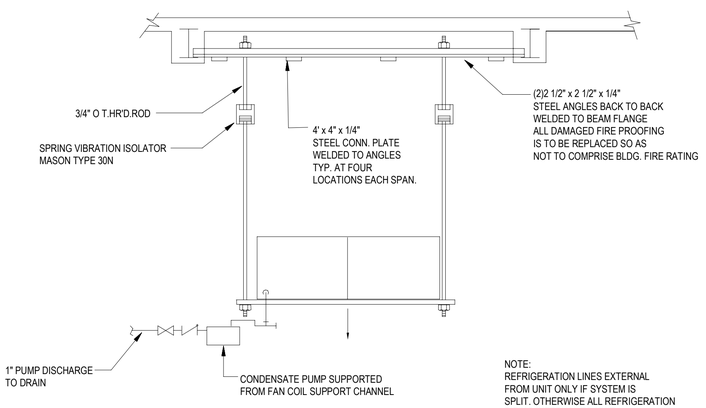

NOTE:
REFRIGERATION LINES EXTERNAL FROM UNIT ONLY IF SYSTEM IS SPLIT. OTHERWISE ALL REFRIGERATION PIPING INTERNAL TO UNIT.

1 CEILING MOUNTED AC UNIT
NOT TO SCALE

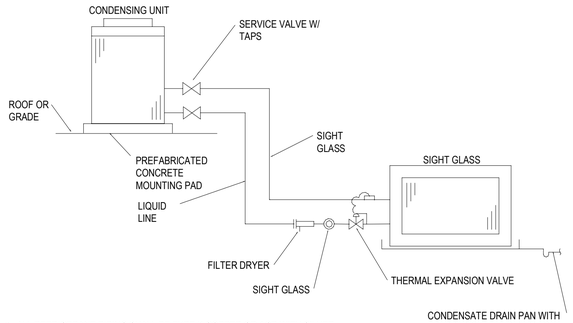

1. ALL REFRIGERANT PIPING SHALL BE TYPE K COPPER OR ACR WITH SILVER SOLDER AS APPROVED BY THE CITY OF CHICAGO CODES.
2. REMOVE ALL EXPANSION DEVICES, ETC. FROM AIR STREAM.
3. PROVIDE 1/2" PRV AT COMPRESSOR DISCHARGE SET AT 400 PSI.
4. DISTANCE BETWEEN CONDENSER UNIT & EVAPORATOR COIL SHALL NOT EXCEED 50 FEET. REFER TO TO CONDENSATE DETAILS. PROVIDE DOUBLE SUCTIONS AS REQUIRED.
5. PIPING SHOWN FOR REFERENCE ONLY, PROVIDE TRAPS ETC. AS REQUIRED PER MANUFACTURER'S RECOMMENDATIONS.
6. FINAL PIPE SIZING SHALL BE BASED ON ACTUAL FIELD ROUTING OF PIPES AND PER MANUFACTURER'S RECOMMENDATIONS.

2 SPLIT SYSTEM REFRIGERANT PIPING DIAGRAM (5 TON OR LESS)
NOT TO SCALE

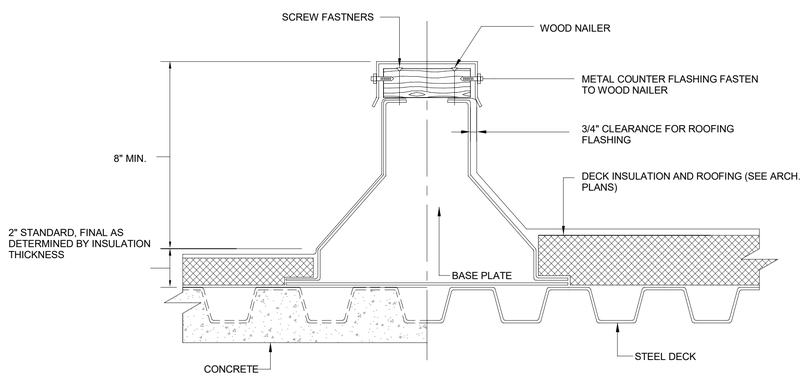

6 TYPE 1 EQUIPMENT RAIL
NOT TO SCALE

DESIGN BY:										
DRAWN BY:										
CHECKED BY:										
APPROVED BY:		1	7/3/2023	ISSUED FOR BID	RA	BF	GB			
CDOT/APPROVED BY:		NO.	DATE	REVISIONS	DES.	DRW.	CHK.	DCCO	CDOT	

TRANSYSTEMS
222 SOUTH RIVERSIDE PLAZA SUITE 610
CHICAGO, ILLINOIS 60606

SKIDMORE, OWINGS & MERRILL LLP
224 SOUTH MICHIGAN AVENUE, SUITE 1000
CHICAGO, ILLINOIS 60604

MILHOUSE ENGINEERING & CONSTRUCTION INC
333 SOUTH WABASH AVENUE, SUITE 2901
CHICAGO, ILLINOIS 60604

EXP. 11/30/23
GEORGE E. BOURI
062-055291
LICENSED PROFESSIONAL ENGINEER OF ILLINOIS

CHICAGO DEPARTMENT OF TRANSPORTATION
DIVISION OF ENGINEERING

STATE / LAKE LOOP ELEVATED STATION
200 NORTH STATE STREET, CHICAGO, IL 60601

MECHANICAL DETAILS

CDOT PROJECT D-1-209 | DATE: 9/9/2022

SPEC. NO.

DRAWING NO. M-502

REVISION NO.1

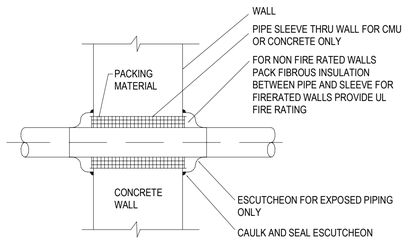

NOTE:
1. PIPE SHALL BE SUPPORTED ON EITHER SIDE OF WALL. PIPE SUPPORT SHALL BE COMPLETELY INDEPENDENT OF WALL.

3 PIPE THRU WALL
NOT TO SCALE

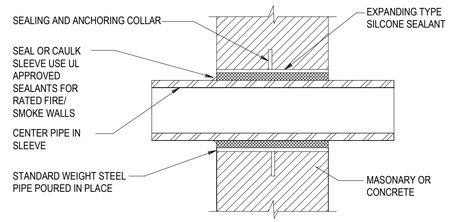

4 PIPE THRU NEW EXTERIOR WALL ABOVE GRADE
NOT TO SCALE

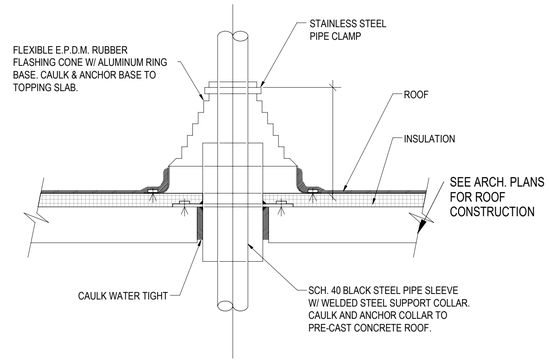

5 SINGLE PIPE ROOF PENETRATION
NOT TO SCALE

NOTE:
1. CONTRACTOR SHALL SIZE THE CHANNEL MEMBERS FOR THE LOADS TO BE SUPPORTED SO AS NOT TO EXCEED A MAXIMUM DEFLECTION OF 1/240 OF THE SPAN BETWEEN HANGER RODS.
2. SEE PIPE COVERING PROTECTION SHIELD AND PIPE SADDLES.

1 PIPE SUPPORT AND HANGER
NOT TO SCALE

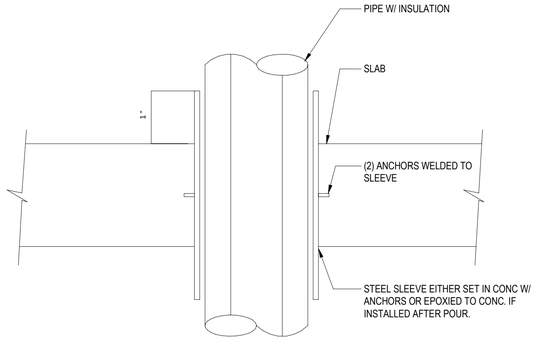

2 PIPE FLOOR PENETRATION
NOT TO SCALE

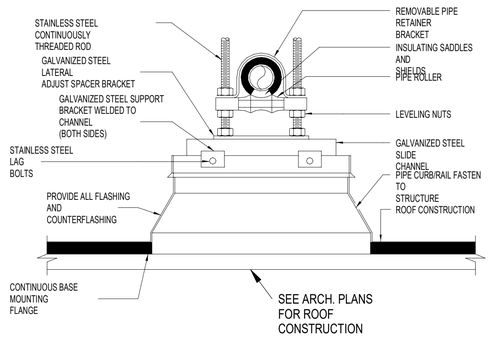

SEQUENCE OF OPERATIONS

ELEVATOR MACHINE ROOMS AND ESCALATOR MACHINE ROOMS (ELEVATED STATIONS):

1. THE AC UNIT SHALL BE CONTROLLED BY A 7 DAY PROGRAMMABLE THERMOSTAT. TEMPERATURE SETPOINT SHALL BE SET AT 82°F THROUGH OUT THE DAY.

2. THE ELECTRIC UNIT HEATER SHALL BE CONTROLLED BY A REMOTE THERMOSTAT. TEMPERATURE SETPOINT SHALL BE SET AT 60°F ON OCCUPIED HOURS AND 50°F FOR UNOCCUPIED HOURS.

3. THE ELEV AND ESCALATOR ROOMS SHALL HAVE HIGH AND LOW TEMPERATURE LIMIT ALARM SWITCHES. LOCAL AND REMOTE ALARMS SHALL SOUND WHEN THE SWITCH TRIPS. LOW TEMPERATURE SHALL BE SET AT 50°F AND HIGH LIMIT TEMPERATURE SHALL BE SET AT 88°F.

CUSTOMER ASSISTANT KIOSK (CAK):

1. THE AC UNIT SHALL BE CONTROLLED BY A 7 DAY PROGRAMMABLE THERMOSTAT. TEMPERATURE SETPOINT SHALL BE SET AT 78°F DURING OCCUPIED HOURS AND 85°F ON UNOCCUPIED HOURS.

2. THE ELECTRIC CABINET HEATER SHALL BE CONTROLLED BY A REMOTE 7 DAY PROGRAMMABLE THERMOSTAT. TEMPERATURE SETPOINT FOR 72°F DURING OCCUPIED HOURS AND 60°F FOR UNOCCUPIED HOURS.

ELECTRICAL AND COMMUNICATION ROOMS:

1. THERE ARE 2 AC UNITS SERVING EACH ROOM. ONLY ONE UNIT SHALL BE ABLE TO HANDLE THE TOTAL COOLING LOAD OF THE SPACE. EACH UNIT SALL BE CONTROLLED BY ITS PROGRAMMABLE THERMOSTAT. ONE UNIT SHALL BE PROGRAMMED TO RUN AT A TEMPERATURE SETPOINT OF 75°F ON MONDAY, WEDNESDAY, FRIDAY, AND SUNDAY, WHILE THE OTHER UNIT SHALL BE AT 75°F ON TUESDAY, THURSDAY, AND SATURDAY. THE UNIT SETPOINT TEMPERATURE IF NOT SET AT 75°F SHALL BE SET AT 78°F.

2. THERE ARE 2 ELECTRIC CABINET HEATERS SERVING EACH ROOM. ONE UNIT COULD HANDLE THE TOTAL HEATING LOAD OF THE SPACE. EACH UNIT SHALL BE CONTROLLED BY A REMOTE 7 DAY PROGRAMMABLE THERMOSTAT. ONE UNIT SHALL BE PROGRAMMED TO RUN AT A TEMPERATURE SETPOINT OF 72°F ON MONDAY, WEDNESDAY, FRIDAY, AND SUNDAY, WHILE THE OTHER UNIT SHALL BE AT 75°F ON TUESDAY, THURSDAY, AND SATURDAY. THE UNIT SETPOINT TEMPERATURE IF NOT SET AT 72°F SHALL BE SET AT 55°F.

3. THESE ROOMS SHALL HAVE HIGH AND LOW TEMPERATURE LIMIT ALARM SWITCHES. LOCAL AND REMOTE ALARMS SHALL SOUND WHEN THE SWITCH TRIPS. LOW TEMPERATURE SHALL BE SET AT 50°F AND HIGH LIMIT TEMPERATURE SHALL BE SET AT 80°F.

ELECTRICAL CLOSETS AND UTILITY ROOMS:

1. EACH ROOM SHALL BE SERVED BY AN EXHAUST FAN, FAN SHALL BE CONTROLLED BY A REMOTE THERMOSTAT. THE TEMPERATURE SETPOINT SHALL BE SET AT 80°F. WHEN SPACE TEMPERATURE RISES TO 80°F OR ABOVE, THE OA INTAKE AND EXH AIR DAMPERS SHALL OPEN. THE EXHAUST FAN SHALL START. WHEN SPACE DROPS BELOW 80°F. THE FAN SHALL STOP. THE OA INTAKE AND EXHAUST AIR DAMPERS SHALL BE CLOSED.

2. EACH ROOM SHALL BE SERVED BY AN ELECTRIC UNIT HEATER. EACH HEATER SHALL BE CONTROLLED BY A REMOTE THERMOSTAT. TEMPERATURE SETPOINT SHALL BE SET AT 60°F.

3. UTILITY ROOMS SHALL HAVE LOW TEMPERATURE LIMIT ALARM SWITCHES. LOCAL AND REMOTE ALARMS SHALL SOUND WHEN THE SWITCH TRIPS. LOW TEMPERATURE SHALL BE SET AT 50°F.

ELEVATOR AND ESCALATOR PITS

1. EACH SPACE SHALL BE SERVED BY AN ELECTRIC CABINET UNIT HEATER. EACH HEATER SHALL BE CONTROLLED BY A THERMOSTAT. TEMPERATURE SETPOINT SHALL BE ST AT 55°F.

INFRARED HEATERS

1. INFARED HEATERS SALL BE CONTROLLED BY A PUSH BUTTON SWITCH WITH ADJUSTABLE TIMER.

TOILETS AND JANITORS CLOSET:

1. EACH ROOM SHALL BE SERVED BY A DEDICATED EXHAUST FAN. EACH FAN SHALL BE CONTROLLED BY A PROGRAMMABLE TIMER.

2.THE ELECTRIC CABINET HEATER SHALL BE CONTROLLED BY A REMOTE 7 DAY PROGRAMMABLE THERMOSTAT. TEMPERATURE SETPOINT FOR 68°F DURING OCCUPIED HOURS AND 60°F FOR UNOCCUPIED HOURS.

DESIGN BY:										
DRAWN BY:										
CHECKED BY:										
APPROVED BY:		1	7/3/2023	ISSUED FOR BID	RA	BF	GB			
CDOT/APPROVED BY:		NO.	DATE	REVISIONS	DES.	DRW.	CHK.	DCCO	CDOT	

TRANSYSTEMS
222 SOUTH RIVERSIDE PLAZA SUITE 610
CHICAGO, ILLINOIS 60606

SKIDMORE, OWINGS & MERRILL LLP
224 SOUTH MICHIGAN AVENUE, SUITE 1000
CHICAGO, ILLINOIS 60604

MILHOUSE ENGINEERING & CONSTRUCTION INC
333 SOUTH WABASH AVENUE, SUITE 2901
CHICAGO, ILLINOIS 60604

EXP. 11/30/23
GEORGE E. BOURIS
062-055291
LICENSED PROFESSIONAL ENGINEER OF ILLINOIS

CHICAGO DEPARTMENT OF TRANSPORTATION
DIVISION OF ENGINEERING

STATE / LAKE LOOP ELEVATED STATION
200 NORTH STATE STREET, CHICAGO, IL 60601

SPEC. NO.

MECHANICAL DETAILS

DRAWING NO.
M-503

CDOT PROJECT D-1-209 | DATE: 9/9/2022 | REVISION NO.1

ELECTRIC CABINET UNIT HEATER SCHEDULE

TAG	LOCATION	TYPE	DIMENSIONS (L x W x H)	CFM	EAT (°F)	KW	ELEC DATA				MANUFACTURER MODEL	SHIPPING WEIGHT (LBS)	REMARKS
							VOLT	HZ	PH	AMPS			
ECH-1-1	ELEVATOR PIT SOUTH	ELECTRIC	16-1/8" x 1-5/16" x 22-1/16"	160	60	4	208	60	3	11.52	INDEECO WCI 932U04000D	28	1,2
ECH-1-2	ELEVATOR PIT NORTH	ELECTRIC	16-1/8" x 1-5/16" x 22-1/16"	160	60	4	208	60	3	11.52	INDEECO WCI 932U04000D	28	1,2
ECH-M-1 ECH-M-2	COMM RM 201	ELECTRIC	16-1/8" x 1-5/16" x 22-1/16"	160	60	4	208	60	3	11.52	INDEECO WCI 932U03000D	24	1,2,4
ECH-2-1	JAN 103	ELECTRIC	16-1/8" x 1-5/16" x 22-1/16"	160	60	3	208	60	3	8.74	INDEECO WCI 932U03000D	28	1,2,4
ECH-2-2	JAN 113	ELECTRIC	16-1/8" x 1-5/16" x 22-1/16"	160	60	3	208	60	3	8.74	INDEECO WCI 932U03000D	28	1,2,4
ECH-2-3	TOILET 104	ELECTRIC	16-1/8" x 1-5/16" x 22-1/16"	160	60	4	208	60	3	11.52	INDEECO WCI 932U04000D	28	1,2,4
ECH-2-4	TOILET 114	ELECTRIC	16-1/8" x 1-5/16" x 22-1/16"	160	60	4	208	60	3	11.52	INDEECO WCI 932U04000D	28	1,2,4
ECH-2-5	CAK 107	ELECTRIC	16-1/8" x 1-5/16" x 22-1/16"	160	60	3	208	60	3	8.74	INDEECO WCI 932U03000D	28	1,2,4
ECH-2-6	CAK 117	ELECTRIC	16-1/8" x 1-5/16" x 22-1/16"	160	60	3	208	60	3	8.74	INDEECO WCI 932U03000D	28	1,2,4

REMARKS:

1. UNIT SHALL BE WALL MOUNTED. COORDINATE COLOR WITH ARCHITECT
2. INTEGRAL DISCONNECT SWITCH.
3. NOT USED
4. PROVIDE REMOTE 7 DAY PROGRAMMABLE THERMOSTAT.

TEMPERATURE ALARM SCHEDULE

TYPE	LOCATION	SWITCH ACTION	RANGE	VOLT	PH	HZ	MANUFACTURER AND MODEL	REMARKS
HIGH TEMPERATURE SPACE THERMOSTAT SETPOINT AT 85°F	COMMUNICATIONS ROOM - 201	TWO SINGLE- POLE, DOUBLE THROW	30-110	120	1	60	PENN A28AA-4C	
	ELEVATOR MACHINE ROOM - 001,011							
	ESCALATOR CONTROL ROOM - 002,012							
LOW TEMPERATURE SPACE THERMOSTAT SETPOINT AT 40°F	COMMUNICATION ROOM - 201	SINGLE- POLE, DOUBLE THROW	30-110	120	1	60	PENN A19BAC-1C	
	ELEVATOR MACHINE ROOM - 001,011							
	ESCALATOR CONTROL ROOM - 002, 012							
	TOILET ROOM 104, 114							

AIR COOLED CONDENSING UNIT SCHEDULE

TAG	LOCATION	COOLING CAPACITY (BTU/HR)	REFRIG.	REFRIG. CHARGE (LBS)	EER	ELECTRICAL					UNIT WEIGHT (LBS)	MANUFACTURER AND MODEL	REMARKS
						VOLT	PH	HZ	MCA	MOCP			
CU-1-1	ROOF	24,000	R-410A	5.73	13	208	1	60	25	35	135	CARRIER 38MARBQ24AA3	
CU-1-2	ROOF	24000	R-410A	5.73	13	208	1	60	25	35	135	CARRIER 38MARBQ24AA3	
CU-1-3	WEST WALL OF ESC RM 002	24,000	R-410A	5.73	13	208	1	60	25	35	135	CARRIER 38MARBQ24AA3	
CU-1-4	WEST WALL OF ESC RM 012	24000	R-410A	5.73	13	208	1	60	25	35	135	CARRIER 38MARBQ24AA3	
CU-M-1 CU-M-2	WEST WALL OF COMM RM	24,000	R-410A	5.73	11	208	1	60	25	35	135	CARRIER 38MARBQ24AA3	
CU-M3 CU-M4	NORTH WALL OF COMM RM	24,000	R-410A	5.73	11	208	1	60	25	35	135	CARRIER 38MARBQ24AA3	
CU-2-1	ROOF	24,000	R-410A	5.73	13	208	1	60	25	35	135	CARRIER 38MARBQ24AA3	
CU-2-2	ROOF	24,000	R-410A	5.73	13	208	1	60	25	35	135	CARRIER 38MARBQ24AA3	
CU-2-3	EAST WALL OF ELEC 015	18000	R-410A	4.08	12.8	208	1	60	16	25	101	CARRIER 38MARBQ18AA3	
CU-2-4	EAST WALL OF ELEC 006	18000	R-410A	4.08	12.8	208	1	60	16	25	101	CARRIER 38MARBQ18AA3	

REMARKS:

1. PROVIDE WALL MOUNTING KIT.
2. ROUTE 5/8" REFRIGERANT SUCTION LINE AND 1/4" REFRIGERANT LIQUID LINE TO CORRESPONDING AC UNIT

ELECTRIC INFARED HEATER SCHEDULE

TAG	LOCATION	TYPE	REFL. PATTERN	SIZE (LxWxH)	MOUNTING HEIGHT	KW	PHASE	VOLT	SHIPPING WEIGHT (LBS)	MANUFACTURER AND MODEL	REMARKS
IRH-7	UNPAID AREA	2 LAMP	60° ASYMMETRIC	24"x15"x7-7/8"	9'-0"	3.2	1	208	20	FOSTORIA 222-A60-THSS-208V	1,2,3,4,5
IRH-1 - 6	PLATFROM AREA	2 LAMP	60° ASYMMETRIC	24"x15"x7-7/8"	9'-0"	3.2	1	208	20	FOSTORIA 222-A60-THSS-208V	1,2,3,4

REMARKS:

1. PROVIDE WITH QUARTZ LAMPS.
2. PROVIDE STAINLESS STEEL HOUSING.
3. PROVIDE DISCONNECT SWITCH.
4. PROVIDE PUSH BUTTON CONTROL WITH ADJUSTABLE TIME SETTING.

ELECTRIC UNIT HEATER SCHEDULE

TAG	LOCATION	TYPE	KW	CFM	ELECTRICAL DATA			WEIGHT (LBS)	SIZE (WxHxD)	MOUNTING	MANUFACTURER AND MODEL	REMARKS
					VOLT	PH	HZ					
EUH-1-1	ELEV MACH RM 001	HORIZONTAL	3.0	510	208	3	60	45	16" x 17" x 12"	WALL	INDEECO UCI 926U03000DA	2,3
EUH-1-2	ELEV MACH RM 011	HORIZONTAL	3.0	510	208	3	60	45	16" x 17" x 12"	WALL	INDEECO UCI 926U03000DA	2,3
EUH-1-3	ESC CONTROL RM 002	HORIZONTAL	3.0	510	208	3	60	45	16" x 17" x 12"	WALL	INDEECO UCI 926U03000DA	2,3
EUH-1-4	ESC CONTROL RM 012	HORIZONTAL	3.0	510	208	3	60	45	16" x 17" x 12"	WALL	INDEECO UCI 926U03000DA	2,3
EUH-1-5	UTILITY RM 003	HORIZONTAL	3.0	510	208	3	60	45	16" x 17" x 12"	WALL	INDEECO UCI 926U02000DA	2,3
EUH-1-6	UTILITY RM 013	HORIZONTAL	3.0	510	208	3	60	45	16" x 17" x 12"	WALL	INDEECO UCI 926U03000DA	2,3
EUH-M-1	ELEC CL 202	HORIZONTAL	3.0	510	208	3	60	45	16" x 17" x 12"	WALL	INDEECO UCI 926U03000DA	2,3
EUH-M-2	ELEC RM 203	HORIZONTAL	5.0	510	208	3	60	46	16" x 17" x 12"	WALL	INDEECO UCI 926U04000DA	2,3
EUH-M-3	NOT USED		-									
EUH-M-4	ELEC RM 203	HORIZONTAL	5.0	510	208	3	60	46	16" x 17" x 12"	WALL	INDEECO UCI 926U04000DA	2,3
EUH-2-1	ELEV MACH RM 101	HORIZONTAL	3.0	510	208	3	60	45	16" x 17" x 12"	WALL	INDEECO UCI 926U03000DA	2,3
EUH-2-2	ELEV MACH RM 111	HORIZONTAL	3.0	510	208	3	60	45	16" x 17" x 12"	WALL	INDEECO UCI 926U03000DA	2,3
EUH-2-3	ELEC CL 106	HORIZONTAL	3.0	510	208	3	60	45	16" x 17" x 12"	WALL	INDEECO UCI 926U03000DA	2,3
EUH-2-4	ELEC CL 115	HORIZONTAL	3.0	510	208	3	60	45	16" x 17" x 12"	WALL	INDEECO UCI 926U03000DA	2,3
EUH-2-5	ESCALATOR PIT NORTH	HORIZONTAL	3.0	510	208	3	60	45	16" x 17" x 12"	WALL	INDEECO UCI 926U03000DA	2,3
EUH-2-6	ESCALATOR PIT SOUTH	HORIZONTAL	3.0	510	208	3	60	45	16" x 17" x 12"	WALL	INDEECO UCI 926U03000DA	2,3

REMARKS:

1. UNITS TO HAVE INTEGRAL THERMOSTATS AND BE WASHDOWN TYPE UNITS.
2. MOUNT OFF WALL. W/ WALL BRACKET.
3. UNITS SHALL BE WEATHER TIGHT AND BE LOCATED NOT TO INTERFERE WITH SYSTEM OPERATIONS.
4. UNITS SHALL BE AS REQUIRED BY THE ESCALATOR SUPPLIER.

AIR CONDITIONING UNIT SCHEDULE

TAG	AREA SERVED	LOCATION	CFM	CAPACITY (BTU/HR)	ELECTRICAL DATA			WEIGHT (LBS)	EER	SIZE (HxWxD) (IN.)	MANUFACTURER AND MODEL	REMARKS
					VOLTS	MCA	PHASE					
AC-1-1	ELEVATOR MACHINE RM 001	ELEVATOR MACHINE RM 001	611	24,784	208	-	1	44	13	15x45x11	CARRIER DHMAHBQ24XA3	1,2
AC-1-2	ELEVATOR MACHINE RM 011	ELEVATOR MACHINE RM 011	611	24,784	208	-	1	44	13	15x45x11	CARRIER DHMAHBQ24XA3	1,2
AC-1-3	ESC CONTROL RM 002	ESC CONTROL RM 002	611	24,784	208	-	1	44	13	15x45x11	CARRIER DHMAHBQ24XA3	1,2
AC-1-4	ESC CONTROL RM 012	ESC CONTROL RM 012	611	24,784	208	-	1	44	13	15x45x11	CARRIER DHMAHBQ24XA3	1,2
AC-M-1 AC-M-2	COMM RM 201	COMM RM 201	878	21,873	208	-	1	57	11	33x33x8	CARRIER 40MBCQ24	1,2
AC-M-3 AC-M-4	ELEC RM 203	ELEC RM 203	878	21,873	208	-	1	57	11	33x33x8	CARRIER 40MBCQ24	1,2
AC-2-1	ELEV MACH RM 101	ELEV MACH RM 101	611	24,784	208	-	1	44	13	15x45x11	CARRIER DHMAHBQ24XA3	1,2
AC-2-2	ELEV MACH RM 111	ELEV MACH RM 111	611	24,784	208	-	1	44	13	15x45x11	CARRIER DHMAHBQ24XA3	1,2
AC-2-3	CAK 107	CAK 107	420	17,794	208	-	1	46	12.8	11X23X11	CARRIER 40MBCQ18	1,2
AC-2-4	CAK 117	CAK 117	420	17,794	208	-	1	46	12.8	11X23X11	CARRIER 40MBCQ18	1,2

REMARKS:

1. PROVIDE 7 DAY PROGRAMMABLE WALL THERMOSTAT.
2. POWER WILL BE COMING FROM RESPECTIVE CONDENSING UNIT.
3. PROVIDE WALL SLEEVE W/UNIT.
4. MOUNT ON ELEVATOR MACHINE ROOM WALL.
5. ROUTE 5/8" REFRIGERANT SUCTION LINE AND 1/4" REFRIGERANT LIQUID LINE TO CORRESPONDING CONDENSER.

NO.	DATE	REVISIONS	DES.	DRW.	CHK.	DCCO	CDOT
1	7/3/2023	ISSUED FOR BID	RA	BF	GB		

DESIGN BY:
DRAWN BY:
CHECKED BY:
APPROVED BY:
CDOT/APPROVED BY:

TRANSYSTEMS
222 SOUTH RIVERSIDE PLAZA SUITE 610
CHICAGO, ILLINOIS 60606

SKIDMORE, OWINGS & MERRILL LLP
224 SOUTH MICHIGAN AVENUE, SUITE 1000
CHICAGO, ILLINOIS 60604

MILHOUSE ENGINEERING & CONSTRUCTION INC
333 SOUTH WABASH AVENUE, SUITE 2901
CHICAGO, ILLINOIS 60604

EXP. 11/30/23
GEORGE E. BOURI
062-055291
LICENSED PROFESSIONAL ENGINEER OF ILLINOIS

CHICAGO DEPARTMENT OF TRANSPORTATION
DIVISION OF ENGINEERING

STATE / LAKE LOOP ELEVATED STATION
200 NORTH STATE STREET, CHICAGO, IL 60601

SPEC. NO.

MECHANICAL SCHEDULE

DRAWING NO. M-601

CDOT PROJECT D-1-209

DATE: 9/9/2022

REVISION NO.1

CITY OF CHICAGO VENTILATION SCHEDULE

ROOM NUMBER	ROOM NAME	ORDINANCE CLASSIFICATION (ROOM PURPOSE)	FLOOR AREA SQ. FT	ORDINANCE REQUIREMENTS				ACTUAL PROVIDED				HEATING		SERVED BY:	REMARKS
				NATURAL LIGHT & VENTILATION		MECHANICAL VENTILATION		NATURAL LIGHT & VENTILATION		MECHANICAL VENTILATION					
				GLASS AREA SQ. FT	VENT AREA SQ. FT	AIR SUPPLY CFM	AIR EXHAUST CFM	GLASS AREA SQ. FT	VENT AREA SQ. FT	AIR SUPPLY CFM	AIR EXHAUST CFM	LOAD MBH	DESIGN MBH		
001	ELEV MACH RM	INACTIVE STORAGE	54.5	N.A.	N.A.	N.A.	N.A.	N.A.	N.A.	0	0	6.7	10.2	AC1-1& EUH1-1	
011	ELEV MACH RM	INACTIVE STORAGE	54.5	N.A.	N.A.	N.A.	N.A.	N.A.	N.A.	0	0	2.8	10.2	AC1-2 & EUH1-2	
002	ESC CONTROL RM	INACTIVE STORAGE	56.09	N.A.	N.A.	N.A.	N.A.	N.A.	N.A.	0	0	5.4	10.2	AC1-3 & EUH1-3	
003	UTILITY RM	INACTIVE STORAGE	95.93	N.A.	N.A.	N.A.	N.A.	N.A.	N.A.	115	115	6	10.2	EF1-1 & EUH1-5	TRANSFER FROM OA INTAKE
012	ESC CONTROL RM	INACTIVE STORAGE	56.09	N.A.	N.A.	N.A.	N.A.	N.A.	N.A.	0	0	5.4	10.2	AC1-4 & EUH1-4	
013	UTILITY RM	INACTIVE STORAGE	95.93	N.A.	N.A.	N.A.	N.A.	N.A.	N.A.	115	115	6	10.2	EF1-2 & EUH1-6	TRANSFER FROM OA INTAKE
201	COMM RM	INACTIVE STORAGE	228.99	N.A.	N.A.	N.A.	N.A.	N.A.	N.A.	0	0	10.8	27.2	ACM-1, ACM-2 & ECH-M1, ECH-M2	
202	ELEC CL	INACTIVE STORAGE	52.69	N.A.	N.A.	N.A.	N.A.	N.A.	N.A.	115	115	3.3	10.2	EF2-2 & EUH-M1	TRANSFER FROM OA INTAKE
203	ELEC RM	INACTIVE STORAGE	837.78	N.A.	N.A.	N.A.	N.A.	N.A.	N.A.	0	0	15.2	34	ACM-3, ACM-4 & EUH-M3,EUH-M4	
101	ELEV MACH RM	INACTIVE STORAGE	51.94	N.A.	N.A.	N.A.	N.A.	N.A.	N.A.	0	0	4.1	10.2	AC2-1 & EUH2-1	
103	JANITOR	JANITORT CLOSET	48.7	N.A.	N.A.	N.A.	98	N.A.	N.A.	0	100	8.6	10.2	EF2-3 & ECH2-1	
102	HUB PANEL	INACTIVE STORAGE	7.14	N.A.	N.A.	N.A.	N.A.	N.A.	N.A.	0	0	-	-	-	
104	TOILET	TOILET	50	N.A.	N.A.	N.A.	100	N.A.	N.A.	0	100	11.8	13.6	TE2-1 & ECH2-3	
111	ELEV MACH RM	INACTIVE STORAGE	51.94	N.A.	N.A.	N.A.	N.A.	N.A.	N.A.	0	0	4.1	10.2	EUH2-2 & AC2-2	
113	JANITOR		48.7	N.A.	N.A.	N.A.	98	N.A.	N.A.	0	100	8.6	10.2	EF2-2 & ECH2-2	
112	HUB PANEL	INACTIVE STORAGE	7.14	N.A.	N.A.	N.A.	N.A.	N.A.	N.A.	0	0	-	-	-	
114	TOILET	TOILET	50	N.A.	N.A.	N.A.	100	N.A.	N.A.	0	100	11.8	13.6	TE2-2 &ECH2-4	
105	ELEC METER	INACTIVE STORAGE	10.54	N.A.	N.A.	N.A.	N.A.	N.A.	N.A.	0	0	-	-	-	
109	HUB PANEL	INACTIVE STORAGE	3.21	N.A.	N.A.	N.A.	N.A.	N.A.	N.A.	0	0	-	-	-	
106	ELEC CL	INACTIVE STORAGE	40.84	N.A.	N.A.	N.A.	N.A.	N.A.	N.A.	115	115	2.7	10.2	EUH2-3 & EF2-3	
107	CAK	OFFICE	39.76	N.A.	N.A.	24	12	N.A.	N.A.	420	420	8	10.2	ECH2-5 & AC2-3	
108	HUB PANEL	INACTIVE STORAGE	3.81	N.A.	N.A.	N.A.	N.A.	N.A.	N.A.	0	0	-	-	-	
119	HUB PANEL	INACTIVE STORAGE	3.79	N.A.	N.A.	N.A.	N.A.	N.A.	N.A.	0	0	-	-	-	
115	ELEC CL	INACTIVE STORAGE	52.13	N.A.	N.A.	N.A.	N.A.	N.A.	N.A.	115	115	5.2	10.2	EUH2-4 & EF2-4	
117	CAK	OFFICE	46.59	N.A.	N.A.	24	12	N.A.	N.A.	420	370	8	10.2	ECH2-6 & AC2-4	
118	HUB PANEL	INACTIVE STORAGE	3.81	N.A.	N.A.	N.A.	N.A.	N.A.	N.A.	0	0	-	-		

EXHAUST FAN SCHEDULE

TAG	AREA SERVED	LOCATION	CFM	E.S.P. IN WC	RPM	ELECTRICAL					MANUFACTURER AND MODEL	UNIT WT LBS.	REMARKS
						HP	VOLT	PH	HZ	DRIVE			
EF-M1	NOT USED												
EF-1-1	UTILITY 003	WALL	115	0.25	766	1/15	115	1	60	DIRECT	GREENHECK SE1-8-440-VG	111	2,4
EF-1-2	UTILITY 013	WALL	115	0.25	766	1/15	115	1	60	DIRECT	GREENHECK SE1-8-440-VG	111	2,4
EF-M-2	ELEC CLOSET 202	WALL	115	0.25	766	1/15	115	1	60	DIRECT	GREENHECK SE1-8-440-VG	111	2,4
EF-2-1	JANITORS ROOM 103	OUTSIDE ON EAST SIDE OF JANITORS RM 103	100	0.5	1131	1/4	115	1	60	DIRECT	GREENHECK SQ-97-VG	60	3
EF-2-2	JANITORS ROOM 113	OUTSIDE ON EAST SIDE OF JANITORS RM 113	100	0.5	1131	1/4	115	1	60	DIRECT	GREENHECK SQ-97-VG	60	3
EF-2-3	ELEC CLOSET 106	ELEC CLOSET 106	100	0.25	766	1/4	115	1	60	DIRECT	GREENHECK SQ-97-VG	60	3
EF-2-4	ELEC CLOSET 115	WALL	115	0.25	766	1/15	115	1	60	DIRECT	GREENHECK SE1-8-440-VG	111	2,4
TE-2-1	TOILET 104	ROOF OF TOILET 104	100	0.5	1131	1/4	115	1	60	DIRECT	GREENHECK G-097-VG	60	1,2
TE-2-2	TOILET 114	ROOF OF TOILET 114	100	0.25	1131	1/4	115	1	60	DIRECT	GREENHECK G-097-VG	60	1,2
EF-MS-1	ELEV MACH RM MS-2	WALL	1,000	0.25	1526	1/4	115	1	60	DIRECT	GREENHECK SE1-12-432-VG	40	2,4
EF-MS-2	ELEV MACH RM MS-1	WALL	1,000	0.25	1526	1/4	115	1	60	DIRECT	GREENHECK SE1-12-432-VG	40	2,4

REMARKS:

1. PROVIDE ROOF CURB.
2. PROVIDE MOTORIZED DAMPERS, EC MOTOR, DISCONNECT SWITCH, ALUMINUM BIRD SCREEN AND CONTROL DIAL FOR AIRFLOW CONTROL.
3. PROVIDE MOTORIZED DAMPERS, EC MOTOR, DISCONNECT SWITCH AND CONTROL DIAL FOR AIRFLOW CONTROL.
4. PROVIDE MOTOR GUARD

CITY OF CHICAGO REFRIGERATION SCHEDULE

TAG	SERVICE	LOCATION	NO. COMP	TON	REFRIGERANT		AIR COOLED
					QUANT (LBS)	TYPE	
CU-1-1	AC-1-1	ROOF	1	2	5.73	R-410A	X
CU-1-2	AC-1-2	ROOF	1	2	5.73	R-410A	X
CU-1-3	AC-1-3	WEST WALL OF ESC RM 002	1	2	5.73	R-410A	X
CU-1-4	AC-1-4	WEST WALL OF ESC RM 012	1	2	5.73	R-410A	X
CU-M-1 CU-M-2	AC-M-1 AC-M-2	WEST WALL OF COMM RM	1	2	5.73	R-410A	X
CU-2-1	AC-2-1	ROOF	1	2	5.73	R-410A	X
CU-2-2	AC-2-2	ROOF	1	2	5.73	R-410A	X
CU-2-3	AC-2-3	EAST WALL OF ELEC 015	1	2	4.08	R-410A	X
CU-2-4	AC-2-4	EAST WALL OF ELEC 006	1	1.5	4.08	R-410A	X

NOTES:

1. INSTALL PRESSURE RELIEF VALVE ON HIGH PRESSURE SIDE OF SYSTEM. UPSTREAM OF AN INTERVENING VALVES.
2. REMOVE EXPANSION VALVES, DEVICES, & CONNECTIONS FROM AIR STREAM.
3. REFRIGERATION PIPING TO BE TYPE "K" OR ACR.
4. ALL CONNECTIONS AND DEVICES TO BE BRAZED.

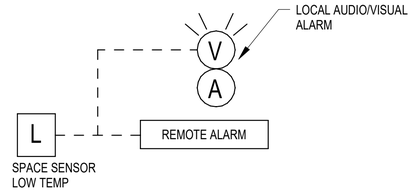

WHEN SPACE TEMPERATURE DROPS BELOW 31°F LOCAL AND REMOTE ALARM SHALL SOUND. COORDINATE LOCATION OF REMOTE ALARM WITH OWNER. REMOTE ALARM SHALL BE OVER WIRELESS MEANS PROVIDED BY CONTRACTOR.

1 LOW TEMP ALARM - ROOMS 103,104,113,114
NOT TO SCALE

HEATING CERTIFICATION STATEMENT

I hereby certify that the heating system will heat all rooms regularly occupied by humans to an inside temperature of 68° when the outside temperature is minus 10° F as required by Section 32(13-196-410) and 4(5-4-270) of the Chicago Building Code and by Paragraph 1203.1 of Chapter 14B-12 (Interior Environment) of the proposed Building Planning and Life Safety portion of the Code.

DESIGN BY:										
DRAWN BY:										
CHECKED BY:										
APPROVED BY:		1	7/3/2023	ISSUED FOR BID	RA	BF	GB			
CDOT/APPROVED BY:		NO.	DATE	REVISIONS	DES.	DRW.	CHK.	DCCO	CDOT	

TRANSYSTEMS
222 SOUTH RIVERSIDE PLAZA SUITE 610
CHICAGO, ILLINOIS 60606

SKIDMORE, OWINGS & MERRILL LLP
224 SOUTH MICHIGAN AVENUE, SUITE 1000
CHICAGO, ILLINOIS 60604

MILHOUSE ENGINEERING & CONSTRUCTION INC
333 SOUTH WABASH AVENUE, SUITE 2901
CHICAGO, ILLINOIS 60604

EXP. 11/30/23
GEORGE E. POURIS
062-055291
LICENSED PROFESSIONAL ENGINEER OF ILLINOIS

CHICAGO DEPARTMENT OF TRANSPORTATION
DIVISION OF ENGINEERING

STATE / LAKE LOOP ELEVATED STATION
200 NORTH STATE STREET, CHICAGO, IL 60601

SPEC. NO.

MECHANICAL SCHEDULE

DRAWING NO.
M-602

CDOT PROJECT D-1-209 | DATE: 9/9/2022 | REVISION NO.1

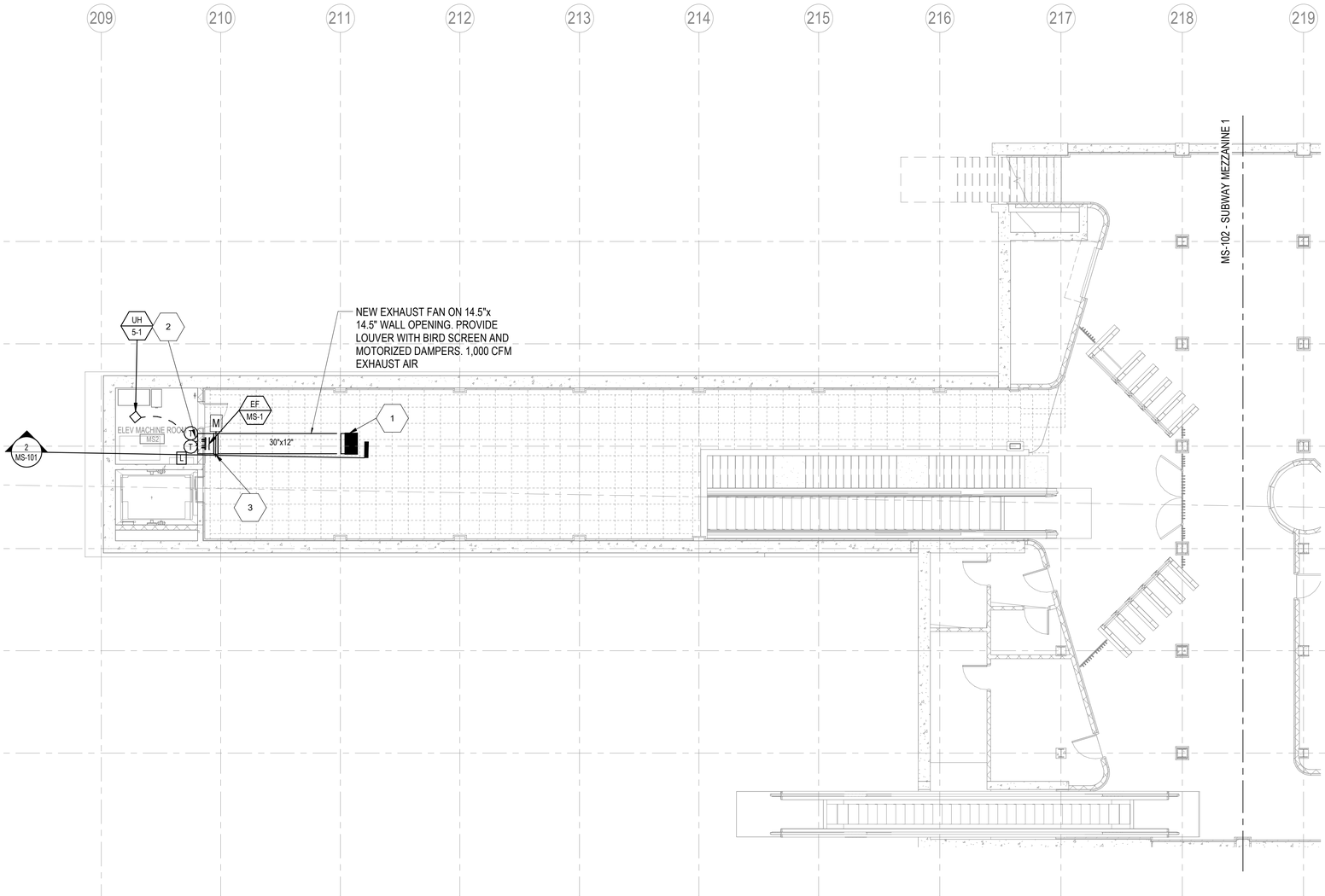

1 MECHANICAL SUBWAY MEZZANINE LEVEL SOUTH
1/8" = 1'-0"

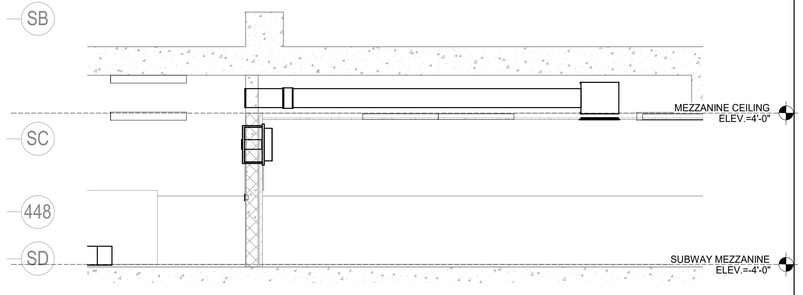

2 EVELVATOR MACHINE ROOM MS2
1/4" = 1'-0"

Keynote Legend	
Key Value	Keynote Text
1	NEW 30x24 OA INTAKE 50% FA GRILLE. GRILLE SHALL BE EQUAL TO TITUS 350 RL. 3/4" SPACING. PROVIDE WIRE MESH SCREEN. LOCATE AT LEAST 15' FROM ANY EXHAUST.
2	PROVIDE WIRE MESH SCREEN.
3	NEW MOTORIZED DAMPER. INTERLOCKED WITH EXHAUST FAN.

1 2 3 4 5 6 7 8 9 10 11 12 13 14 15 16 17 18 19 20

DESIGN BY:										
DRAWN BY:										
CHECKED BY:										
APPROVED BY:		1	7/3/2023	ISSUED FOR BID	RA	BF	GB			
CDOT/APPROVED BY:		NO.	DATE	REVISIONS	DES.	DRW.	CHK.	DCCO	CDOT	

TRANSYSTEMS
222 SOUTH RIVERSIDE PLAZA SUITE 610
CHICAGO, ILLINOIS 60606

SKIDMORE, OWINGS & MERRILL LLP
224 SOUTH MICHIGAN AVENUE, SUITE 1000
CHICAGO, ILLINOIS 60604

MILHOUSE ENGINEERING & CONSTRUCTION INC
333 SOUTH WABASH AVENUE, SUITE 2901
CHICAGO, ILLINOIS 60604

Exp. 11/30/23
GEORGE E. BOURIS
062-055291
LICENSED PROFESSIONAL ENGINEER OF ILLINOIS

CHICAGO DEPARTMENT OF TRANSPORTATION
DIVISION OF ENGINEERING

STATE / LAKE LOOP ELEVATED STATION
200 NORTH STATE STREET, CHICAGO, IL 60601

SPEC. NO.

MECHANICAL SUBWAY - MEZZANINE LEVEL NEW PLAN

DRAWING NO.
MS-101

CDOT PROJECT D-1-209

DATE: 9/9/2022

REVISION NO.1

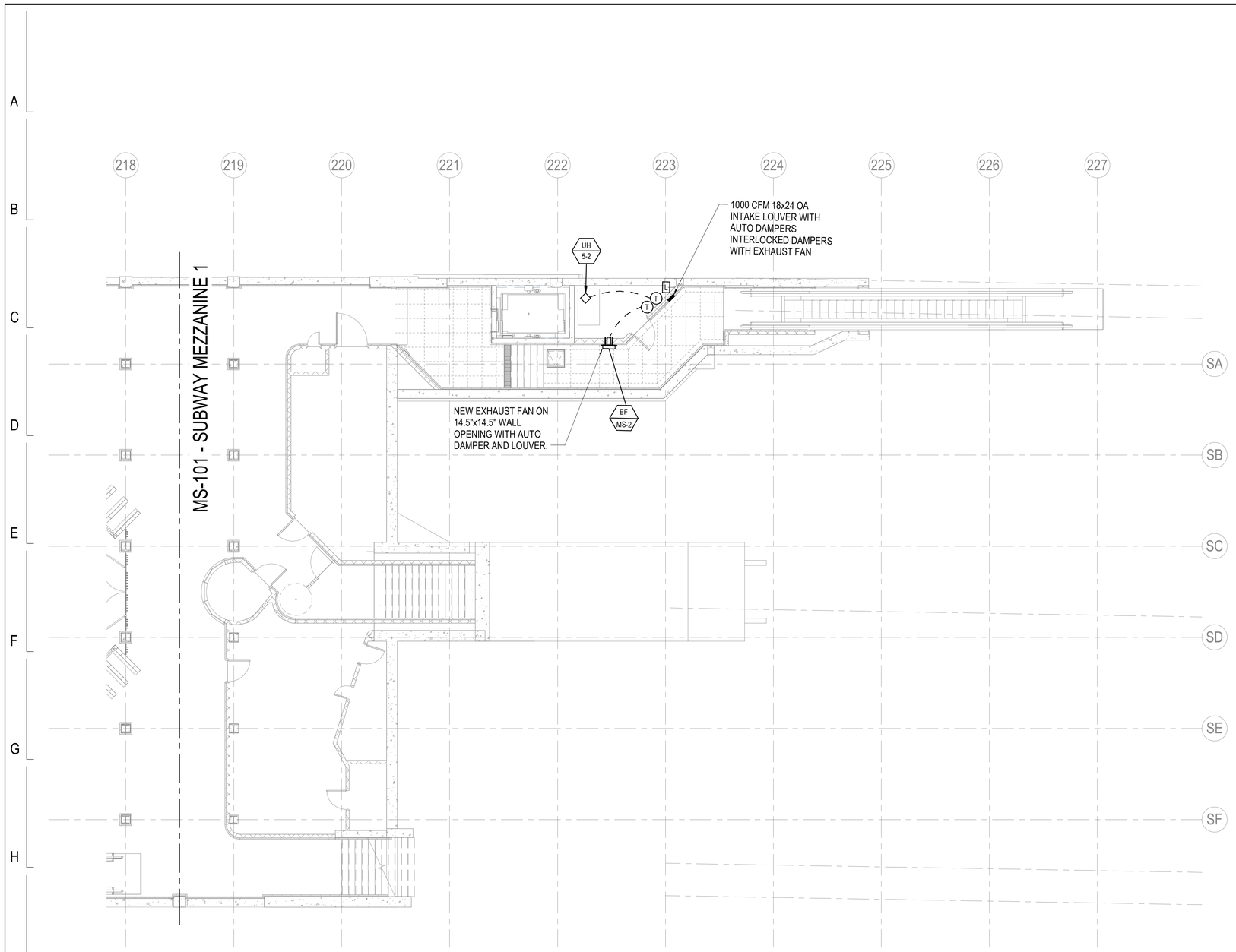

1 MECHANICAL SUBWAY MEZZANINE LEVEL NORTH
1/8" = 1'-0"

DESIGN BY:										
DRAWN BY:										
CHECKED BY:										
APPROVED BY:		1	7/3/2023	ISSUED FOR BID	RA	BF	GB			
CDOT/APPROVED BY:		NO.	DATE	REVISIONS	DES.	DRW.	CHK.	DCCO	CDOT	

TRANSYSTEMS
222 SOUTH RIVERSIDE PLAZA SUITE 610
CHICAGO, ILLINOIS 60606

SKIDMORE, OWINGS & MERRILL LLP
224 SOUTH MICHIGAN AVENUE, SUITE 1000
CHICAGO, ILLINOIS 60604

MILHOUSE ENGINEERING &
CONSTRUCTION INC
333 SOUTH WABASH AVENUE, SUITE 2901
CHICAGO, ILLINOIS 60604

Exp. 11/30/23
GEORGE E. BOURNIAS
062-055291
PROFESSIONAL ENGINEER
OF
ILLINOIS

CHICAGO DEPARTMENT
OF TRANSPORTATION
DIVISION OF ENGINEERING

STATE / LAKE LOOP ELEVATED STATION
200 NORTH STATE STREET, CHICAGO, IL 60601

SPEC. NO.

MECHANICAL SUBWAY - MEZZANINE LEVEL NEW PLAN

DRAWING NO.
MS-102

CDOT PROJECT D-1-209

DATE: 9/9/2022

REVISION NO.1

RACEWAY & WIRING SYMBOLS LIST

SYMBOL	DESCRIPTION
	CONDUIT CONCEALED IN CEILING WALL OR IN SLAB EXPOSED CONDUIT ALL CONDUITS WITH MINIMUM #12 WIRES. ALL CONDUITS MINIMUM 3/4" UNLESS OTHERWISE NOTED. PROVIDE EQUIPMENT GROUND CONDUCTOR IN ALL RACEWAYS.
	CONDUIT UP
	CONDUIT DOWN
J (J) JB	JUNCTION BOX
MH HH	MANHOLE, HANDHOLE

WIRING DEVICES SYMBOLS LIST

SYMBOL	DESCRIPTION
^{a} WP,OS,T,VS 3W	SINGLE POLE SWITCH, LOWER CASE LETTER INDICATES OUTLETS CONTROLLED. 42" MAX. A.F.F. WP DENOTES WEATHER PROOF, 3W INDICATES 3 WAY, OS INDICATES OCCUPANCY SENSOR, T INDICATES THERMAL OVERLOAD ELEMENT DISCONNECT SWITCH, VS INDICATES VACANCY SENSOR
LOCK GFCI WP N-LP1:1	DUPLEX RECEPTACLE - 20A, 2 POLE, 3 WIRE, 125V, AC, NEMA 5-20R MOUNTED 18" A.F.F. UNLESS OTHERWISE NOTED. WP DENOTES WEATHER PROOF, GFCI DENOTES GROUND FAULT CIRCUIT INTERRUPTER TYPE. LOCK DENOTES LOCKABLE TYPE. S-N-LP1:1 DENOTES PANEL AND CIRCUIT NUMBER
	DOUBLE DUPLEX RECEPTACLE - 20A, 2 POLE, 3 WIRE, 125V, AC, NEMA 5-20R MOUNTED 18" A.F.F. UNLESS OTHERWISE NOTED.
	DOUBLE DUPLEX RECEPTACLE - 20A, 2 POLE, 3 WIRE, 125V, AC, NEMA 5-20R MOUNTED IN FLOOR BOX

SPECIAL SYSTEM SYMBOLS LIST

SYMBOL	DESCRIPTION	SYMBOL	DESCRIPTION
MS	MOTION SENSOR	DM	DAMPER MOTOR
DS	DOOR SWITCH	FS	FLOW SWITCH
CR	CARD READER	PS	PRESSURE SWITCH
FS FS	WATER LEVEL FLOAT SWITCH	SS	SILL HEATER

LIGHTING SYMBOLS LIST

SYMBOL	DESCRIPTION	
OS	OCCUPANCY SENSOR CEILING MOUNTED	
Fx N-LP1:3a	LED LIGHTING FIXTURE CONNECTED TO NORMAL SYSTEM.	LIGHTING FIXTURE Fx - INDICATES FIXTURE TYPE. 3 INDICATES CIRCUIT NUMBER a - INDICATED SWITCH CONTROL N-LP1 INDICATES PANEL E - EMERGENCY PANEL N - NORMAL PANEL R - RELIABLE PANEL C - CONCESSION/TENANT G - GENERATOR, STAND-BY POWER
Fx R-LP1:3a	LED LIGHTING FIXTURE CONNECTED TO RELIABLE SYSTEM.	
Fx E-LP1:3a	LED LIGHTING FIXTURE CONNECTED TO EMERGENCY SYSTEM.	
#1 E-LP1:1	EXIT-DIRECTIONAL SIGN NUMBERS INDICATE INSCRIPTION, ARROWS AND SINGLE OR DOUBLE FACE AS SHOWN. SHADED QUADRANT INDICATES DIRECTION OF LIGHTED FACE. SEE EMERGENCY/EXIT SYMBOL LIST ON DRAWING E-900.	

SINGLE LINE SYMBOLS LIST

SYMBOL	DESCRIPTION
100A	240V NON-FUSIBLE HORSEPOWER RATED DISCONNECT SWITCH-208 VOLTS, 3 PHASE, 3 POLE UNLESS OTHERWISE NOTED. NUMBER INDICATES SWITCH SIZE. MOUNTING HEIGHT 4'-6" A.F.F. UNO
100AS 100AF	240V FUSIBLE HORSEPOWER RATED DISCONNECT SWITCH. MOUNTING HEIGHT 4'-6" A.F.F. UNO UPPER NO. DENOTES SWITCH SIZE, LOWER NO. DENOTES FUSE SIZE
	PILOT LIGHT - PUSH-TO-TEST TYPE.
30A	FUSE, UL RATED (RATING AS SHOWN)
M	METER
XX	CONDUIT/CABLE TAG
30A	CIRCUIT BREAKER (3 POLE UNO) 30A INDICATES TRIP RATING/SETTING (AMPS)
	GROUND
	DRAWOUT AIR CIRCUIT BREAKER WITH CURRENT LIMITER
5	MOTOR NUMBER INDICATES HORSEPOWER
N-LP1	PANELBOARD (NORMAL POWER TYPE). REFER TO PANEL DESIGNATION LEGEND ON THIS DRAWING.
R-LP1	PANELBOARD (RELIABLE POWER TYPE). REFER TO PANEL DESIGNATION LEGEND ON THIS DRAWING.
E-LP1	PANELBOARD (EMERGENCY POWER TYPE). REFER TO PANEL DESIGNATION LEGEND ON THIS DRAWING.
	COMED METER
N BP L E BP	AUTOMATIC TRANSFER SWITCH (N = NORMAL, E = EMERGENCY, L = LOAD, BP = BYPASS)
XFMR #TN-1 45 KVA 208V/120-208V, 3Ø, 4W	TRANSFORMER, DELTA WYE CONFIGURATION, RATINGS AS SHOWN

N - SWBD-1

- NUMBER
- PANEL TYPE
  - CP - COMMUNICATION PANEL
  - DP - DISTRIBUTION PANEL
  - EL - ELEVATOR
  - ESC - ESCALATOR
  - FCEP - FARE CONTROL EQUIPMENT PANEL
  - HP - HEATING PANEL
  - HT - HEAT TRACE PANEL
  - IH - INFRARED HEATER
  - LP - LIGHTING PANEL
  - PP - POWER PANEL
  - RP - RECEPTACLE PANEL
  - SWBD - SWITCHBOARD
- POWER TYPE
  - E - EMERGENCY
  - N - NORMAL
  - R - RELIABLE

PANEL DESIGNATION LEGEND

FIRE ALARM SYMBOLS LIST

SYMBOL	DESCRIPTION
	FIRE ALARM PHONE JACK
F	FIRE ALARM PULL STATION
EOL	END OF LINE DEVICE
SD	SMOKE DETECTOR
HD	HEAT DETECTOR
DD	DUCT SMOKE DETECTOR
V	VISUAL FIRE ALARM DEVICE (STROBE)
AV	AUDIO/VISUAL FIRE ALARM DEVICE (AUDIO & STROBE)
FACP	FIRE ALARM CONTROL PANEL
FAAP	FIRE ALARM ANNUNCIATOR PANEL

MECHANICAL/PLUMBING/ ARCHITECTURAL EQUIPMENT SYMBOLS LIST

SYMBOL	DESCRIPTION
XX X	EQUIPMENT IDENTIFICATION
HD	HAND DRYER
T	THERMOSTAT

ELECTRICAL DRAWINGS COMPLY WITH REQUIREMENTS OF THE 2018 CITY OF CHICAGO ELECTRICAL CODE

DESIGN BY:										
DRAWN BY:										
CHECKED BY:										
APPROVED BY:		4	7/3/2023	ISSUED FOR BID	JM	EM	OS			
CDOT/APPROVED BY:		NO.	DATE	REVISIONS	DES.	DRW.	CHK.	DCCO	CDOT	

TRANSYSTEMS
222 SOUTH RIVERSIDE PLAZA SUITE 610
CHICAGO, ILLINOIS 60606

SKIDMORE, OWINGS & MERRILL LLP
224 SOUTH MICHIGAN AVENUE, SUITE 1000
CHICAGO, ILLINOIS 60604

FACET ENGINEERING
4316 NORTH ELSTON AVENUE
CHICAGO, ILLINOIS 60641

CHICAGO DEPARTMENT OF TRANSPORTATION
DIVISION OF ENGINEERING

STATE / LAKE LOOP ELEVATED STATION
200 NORTH STATE STREET, CHICAGO, IL 60601

SYMBOL LIST

CDOT PROJECT D-1-209

DATE: 9/9/2022

SPEC. NO.

DRAWING NO. E-001

REVISION NO.

GENERAL NOTES:

1. ALL ELECTRICAL DRAWINGS ARE TO BE READ IN CONJUNCTION WITH THE PROJECT SPECIFICATIONS AND ALL OTHER DRAWINGS RELATED TO THE PERFORMANCE OF THE WORK.
2. THE CONTRACTOR RESPONSIBLE FOR THE EXECUTION OF THIS WORK IS TO BECOME THOROUGHLY FAMILIAR WITH THE PROJECT SPECIFICATIONS BEFORE COMMENCING ANY WORK. THE PROJECT SPECIFICATIONS AND DRAWINGS FORM THE BASIS OF THE CONTRACT REQUIREMENTS AND INCLUDE THE TYPE AND GRADE OF MATERIALS TO BE INSTALLED, EQUIPMENT TO BE FURNISHED, THE MANNER BY WHICH TO BE INSTALLED AND WHERE TO BE LOCATED. IN THE EVENT OF A CONFLICT BETWEEN THE PROJECT SPECIFICATIONS AND DRAWINGS, SPECIFICATIONS GOVERN UNLESS THE AUTHORITY DIRECTS OTHERWISE.
3. THE CONTRACTOR IS TO CHECK CAREFULLY ALL CONSTRUCTION DRAWINGS AND SPECIFICATIONS THAT ARE PART OF THIS PROJECT TO ENSURE THAT NO FIXTURE, OUTLET, ALARM STATION OR CONTROL AND POWER WIRING IS OMITTED. THE CONTRACTOR IS TO CONSULT ALL TRADES FURNISHING EQUIPMENT AND OBTAIN FROM THEM ALL DATA. IN SOME CASES EQUIPMENT, FIXTURES AND DEVICES ARE SHOWN FOR REFERENCE ONLY. ASCERTAIN AND PROVIDE THE WIRING AND CONTROL STATIONS REQUIRED FOR THE PROPER FUNCTION OF THE EQUIPMENT.
4. EQUIPMENT LABELS AND INSTRUCTIONS REGARDING THE APPLICATION AND INSTALLATION OF THE LISTED EQUIPMENT IS TO BE FOLLOWED TO ENSURE THAT THE EQUIPMENT IS BEING INSTALLED IN ACCORDANCE WITH THE MANUFACTURER'S LISTING INSTRUCTIONS. THE TEMPERATURE RATING OF THE EQUIPMENT TERMINATIONS ARE TO BE CAREFULLY CORRELATED WITH THE CONDUCTOR AMPACITY TO PREVENT OVERHEATING AND PREMATURE FAILURE.
5. ELECTRICAL DRAWINGS ARE DIAGRAMATIC IN NATURE. NO DIMENSIONS ARE TO BE SCALED OFF ELECTRICAL DRAWINGS. CONTRACTOR IS TOCONSULT ARCHITECTURAL FLOOR PLANS, ELEVATIONS AND REFLECTED CEILING PLANS FOR EXACT LOCATIONS OF LIGHTING FIXTURES, MISCELLANEOUS DEVICES AND OUTLETS.
6. COORDINATE WITH OTHER TRADES AND INSTALL CONDUIT AND BOXES TO CLEAR EMBEDDED DUCTS, OPENINGS AND OTHER STRUCTURAL FEATURES. COORDINATE ALL CONDUIT ROUTES WITH OTHER TRADES AND AVOID INTERFERENCE.
7. ALL LIGHTING FIXTURES ARE TO BE LOCATED AS REQUIRED ON THE PROJECT TO CLEAR DUCTS, PIPING, EQUIPMENT, AND/OR MECHANICAL UNITS.
8. CONDUIT RUNS SHOWN ON THE DRAWINGS ARE DIAGRAMATIC. ALL CONDUITS ARE TO RUN CONCEALED, EXCEPT IN EQUIPMENT ROOMS AND WHERE APPROVED BY THE AUTHORITY.
9. FURNISH AND INSTALL EQUIPMENT DISCONNECT SWITCHES IN STRICT COMPLIANCE WITH CHICAGO ELECTRICAL CODE REQUIREMENTS.
10. CONTRACTOR IS TO COORDINATE EXACT LOCATIONS AND MOUNTING HEIGHTS OF ALL DEVICES WITH THE ARCHITECTURAL PLANS, INCLUDING BUT NOT LIMITED TO ARCHITECTURAL DETAILS, ELEVATIONS, AND MILLWORK/CASEWORK DETAILS.
11. ALL BRANCH CIRCUITS ARE TO BE GROUPED INTO PHASE BALANCED MULTIPLE CIRCUIT HOMERUNS. NOT MORE THAN 6 SINGLE PHASE CIRCUITS ARE ALLOWED IN ONE HOMERUN CONDUIT. ANY CONDUITS ARE NOT TO CONTAIN MORE THAN ONE 3-PHASE, 4-WIRE FEEDER. A GROUND WIRE IS TO BE INSTALLED IN EACH CIRCUIT AND FEEDER.
12. CONTRACTOR IS TO PROVIDE TEMPORARY "FOR CONSTRUCTION" POWER AND LIGHTING IN AREAS OF WORK ACTIVITES DURING CONSTRUCTION AND AS REQUIRED BY OSHA.
13. PROVIDE ALL BRANCH CIRCUITING FROM EACH WIRING DEVICE, FIXTURE, MOTOR, UTILIZATION EQUIPMENT, OR APPLIANCE TO CIRCUIT AND PANEL/ SOURCE INDICATED ON THE DRAWINGS. UNLESS NOTED OTHERWISE, 15 AND 20 AMPERE 120 VOLT BRANCH CIRCUITS ARE TO UTILIZE MINIMUM #12 AWG FOR CIRCUITS UP TO 100 FEET IN LENGTH, #10 AWG FOR CIRCUITS 101 FEET TO 150 FEET IN LENGTH, AND #8 AWG FOR CIRCUITS OVER 150 FEET IN LENGTH. THE LENGTH OF EACH CIRCUIT IS TO BE MEASURED FROM THE LAST DEVICE OR OUTLET ON THE CIRCUIT TO THE PANEL/SOURCE. A GROUND WIRE IS TO BE INSTALLED IN EVERY CONDUIT CONTAINING BRANCH CIRCUITS. A GROUND WIRE IS TO BE EXTENDED TO EACH DEVICE. A 2 PERCENT VOLTAGE DROP IS TO BE MAINTAINED FOR LIGHTING CIRCUITS AND A 3 PERCENT VOLTAGE DROP FOR ALL OTHERS. VOLTAGE READINGS ARE TO BE TAKEN FROM SERVICE PANEL TO FARTHEST DEVICE.
14. ALL ALARM CONTACTS ARE TO BE ROUTED TO RELAY CONTROL PANEL THROUGH THE ITC (LOCATED IN THE ELECTRIC ROOM).
15. REFER TO PLUMBING DRAWINGS FOR EXACT SUMP PUMP CONTROL PANELS LOCATIONS.
16. ALL EXHAUST FANS LOCATED IN VARIOUS ROOMS ARE TO BE CONTROLLED PER SCHEMATICS SHOWN ON THE DRAWINGS. PROVIDE AND INSTALL ALL DEVICES (SELECTOR SWITCHES, THERMOSTAT, RELAYS AND NEMA TYPE 12 BOXES). CONDUITS ARE TO BE TERMINATED IN WIREWAYS LOCATED IN THE ELECTRICAL ROOM OR COMMUNICATION ROOM. THE CONTRACTOR IS TO FURNISH DETAIL SHOP DRAWINGS INDICATING ROUTING OF ALL CONDUITS FOR AUTHORITY'S REVIEW.
17. CONTRACTOR IS TO RECEIVE CTA APPROVAL FOR ALL INTERRUPTION OF POWER ON SERVICE TO ALL SYSTEMS.
18. FOR CLARITY NOT ALL JUNCTION BOXES, WHIP CONNECTIONS, FEEDERS, AND CABLES SHOWN ON THE DRAWINGS. FOR FEEDER SIZES REFER TO E-600 SERIES SCHEDULES.
19. PROVIDE PHOTOCELLS TO CONTROL THE PUBLIC AREA LIGHTING. COORDINATE LOCATION OF PHOTOCELLS WITH ARCHITECTURAL DRAWINGS. REFER TO PLAN DRAWINGS FOR EXACT LOCATIONS OF PHOTOCELLS.
20. ALL ELECTRIC HEATERS ARE TO BE CONTROLLED AS SHOWN ON THE DRAWINGS. PROVIDE ALL CONTROL DEVICES AS REQUIRED.
21. ALL CONDUIT CROSSING STRUCTURAL EXPANSION JOINTS ARE TO BE PROVIDED WITH EXPANSION JOINT FITTINGS.
22. THE CONTRACTOR IS TO PREPARE SHOP DRAWINGS INDICATING ROUTING OF ALL CONDUITS (POINT A TO POINT B). ALL CONDUITS ARE TO BE RIGIDLY SUPPORTED UNDER CTA STRUCTURE.
23. CABLE INSTALLED TO FEED THE LIGHTING FIXTURES ARE TO UTILIZE #12 AWG. CONTRACTOR TO SPLICE FEEDS AT CLOSEST POINT AVAILABLE.
24. MECHANICAL EQUIPMENT MIGHT HAVE SHIFTED TO ACCOMMODATE CLARITY OF DRAWINGS. CONTRACTOR TO COORDINATE EXACT LOCATIONS WITH MECHANICAL TRADE.
25. ELECTRIC UNIT HEATERS (EUH'S), ELECTRIC WALL HEATERS (EWH'S) AND EXHAUST FANS ARE TO BE PROVIDED WITH INTERNAL DISCONNECTING MEANS. THE CONTRACTOR TO PROVIDE EXTERNAL LOCAL DISCONNECT SWITCH IF INTERNAL DISCONNECT SWITCH IS NOT ACCESSIBLE.
26. CABLE/WIRE TO ITC, RCP, AND FIRE ALARM ARE TO BE #14 AWG.
27. NORMAL POWER, EMERGENCY POWER, AND FIRE ALARM SYSTEMS ARE TO BE INSTALLED IN SEPARATE RACEWAYS, THROUGHOUT THE PROJECT.
28. CONTRACTOR TO HAVE A PRE-INSTALLATION MEETING TO COORDINATE CEILING ACCESS POINTS AND FIXTURE MOUNTING.
29. GRS AND RGS ARE ABBREVIATIONS AND ARE TO BE THE SAME TYPE OF CONDUIT.
30. REFER TO SPECIFICATION SECTION 26 03 00 - ELECTRICAL DEMOLITION FOR REMOVAL AND SALVAGE OF EXISTING ELECTRICAL ITEMS.
31. SEE COMMUNICATION DRAWINGS FOR COMMUNICATION WORK. COMMUNICATION WORK IS TO FOLLOW ELECTRICAL SPECIFICATIONS AS IT RELATES TO MEANS AND METHODS OF INSTALLATION.
32. SEE ARCHITECTURAL DRAWINGS FOR FIXTURE AND SIGNAGE MOUNTING INFORMATION. CONTRACTOR IS RESPONSIBLE FOR ALL ASPECTS OF ALL FIXTURES AND SIGNS, AND THEIR INSTALLATION. COORDINATE WITH ARCHITECTURAL DETAILS OF MOUNTING OF SIGNS.
33. RECEPTACLES ARE TO BE PROVIDED WITH WEATHERPROOF VANDAL RESISTANT, GFCI AND UL LISTED FOR WET LOCATIONS. PLATFORM LEVEL COVERPLATES TO BE HUBBEL RAYNTITE MODEL 5028-0 OR APPROVED EQUAL. ALL OTHER COVERPLATES TO BE HUBBEL TAYMAC MODEL MX4280S OR APPROVED EQUAL.
34. REMOVE ALL CABLING, CONDUIT AND DEVICES IN THE BUILDING THAT ARE NOT BEING REUSED. MAKE SUFFICIENT ALLOWANCE IN PRICING. NO CHANGE ORDERS WILL BE APPROVED FOR REMOVAL OF THESE ITEMS.
35. PROVIDE MAXIMUM OF 3' FLEXIBLE CONDUIT FROM JUNCTION BOXES TO EQUIPMENT.
36. REFER TO EQUIPMENT SCHEDULE ON E-600 SERIES DRAWINGS FOR EQUIPMENT SIZES AND REQUIREMENTS.
37. MAINTENANCE CONDITIONS FOR ALL LIGHTING FIXTURES SUPPLIED BY 277V TO GROUND SHALL COMPLY WITH REQUIREMENTS OF CEC ARTICLE 210, PARAGRAPH 18-27-210.6(c) "PREMISES IS UNDER THE SUPERVISION OF A SUPERVISING ELECTRICIAN EMPLOYED BY COMPANY OR BY A CONTRACT WITH A REGISTERED ELECTRICAL CONTRACTOR". INSTALLATION OF LIGHTING FIXTURES HAVE TO COMPLY WITH REQUIREMENTS OF 18-27-210.6(c).(1) SUBPOINTS (a) TO (f).
38. SWITCHBOARD DRAWINGS SUBMITTAL SHALL COMPLY WITH CEC REQUIREMENTS IN ARTICLE 383, PARAGRAPH 18-27-384.11(b) DRAWING SUBMITTAL.
39. CONDUIT SIZE SHALL BE 3/4" MINIMUM, UNLESS NOTED OTHERWISE. PROVIDE CONDUIT TYPE PER SPECIFICATIONS.
40. UNDERGROUND CONDUITS SHALL BE ENCASED IN 3" CONCRETE ENVELOPE FOR ENTIRE RUN.
41. MINIMUM BRANCH CIRCUIT WIRING SHALL BE AS FOLLOWS WITH ASSOCIATED BRANCH CIRCUIT PROTECTION (INCREASE WIRE SIZE TO COMPLY WITH VOLTAGE DROP REQUIREMENTS):
    A. 15A TO 20A - #12 AWG CU + 1 #12 AWG CU GRD
    B. 25A TO 30A - #10 AWG CU + 1 #10 AWG CU GRD
    C. 35A TO 50A - #8 AWG CU + 1 #10 AWG CU GRD
    D. 60A - #6 AWG CU + 1 #10 AWG CU GRD
    E. 100A - #3 AWG CU + 1 #8 AWG CU GRD
    F. 150A - #1/0 AWG CU + 1 #6 AWG CU GRD
42. ALL TRENCHING DUE TO ELECTRICAL WORK SHALL BE BACKFILLED USING CLSM AND FINISHED TO MATCH EXISTING.
43. ALL EMPTY CONDUITS (SPARES) SHALL BE PROVIDED WITH PULL CORD WITH 4'-0" PIGTAIL AT BOTH ENDS.
44. CONTRACTOR SHALL BE RESPONSIBLE FOR COORDINATING COMED UTLITY RELOCATIONS AND INSTALLATION WORK.
45. FIRE ALARM SYSTEM SHALL BE CERTIFIED BY STATE OF ILLINOIS LICENSED FIRE ALARM CONTRACTOR SUCH AS HIGH RISE SECURITY SYSTEMS OR APPROVED EQUAL. THE CONTRACTOR SHALL SUBMIT TO CITY FOR APPROVAL PRIOR TO START OF WORK COMPLETE AND DETAILED PLANS AND SPECIFICATIONS OF THE PROPOSED INSTALLATION PER CEC 760.181. PLANS SHALL INCLUDE:
    A. COMPLETE LEGIBLE RACEWAY DIAGRAMS (LATERAL/HORIZONTAL) AND TWO CORRESPONDING CIRCUIT DIAGRAMS.
    B. LOCATION AND DETAILS OF THE CIRCUITS OF THE CONTROL PANEL ALARM SENDING STATIONS, AUTOMATIC DETECTORS, ALARM SOUNDING DEVICES, SUPERVISORY TEST SWITCHES, TROUBLE SOUNDING DEVICES, AND PILOT LIGHT SWITCH.
    C. DETAILS OF SEPARATE CONDUCTORS IN EACH RACEWAY AND THEIR CONNECTION TO RESPECTIVE TERMINALS.
    D. ONE LINE WIRING DIAGRAM SHOWING THE SERVICE ENTRANCE CONDUCTORS, EQUIPMENT AND FIRE ALARM SUPPLY SOURCE.
    E. FULL LOAD CALCULATIONS FOR ALL INITIATING AND SIGNALING CIRCUITS. FIRE ALARM AND EMERGENCY COMMUNICATION CIRCUIT CONDUCTORS SHALL COMPLY TO CEC SECTION 760.183 IN ITS ENTIRETY.

ABBREVIATIONS:

A,	AMP AMPERE
A/C	AIR CONDITIONER
AC	ALTERNATING CURRENT
ACCU	AIR COOLED CONDENSER UNIT
AFF	ABOVE FINISHED FLOOR
AFG	ABOVE FINISHED GRADE
AHU	AIR HANDLING UNIT
AIC	AVAILABLE INTERRUPTING CURRENT
APS	AUDIO POWER SUPPLY
ARCH	ARCHITECTURAL
ATC	AUTOMATIC THROW-OUT CONTROL
ATS	AUTOMATIC TRANSFER SWITCH
AUTO	AUTOMATIC
AVM	AUTOMATIC VENDING MACHINE
AWG	AMERICAN WIRE GAUGE
B	BOILER
BE	ELECTRONIC BALLAST (RELIABLE POWER)
BKR	BREAKER
BN	ELECTRONIC BALLAST (NORMAL POWER)
BP	BOOSTER PUMP
BPS	BOLTED PRESSURE SWITCH
BU	ELECTRONIC BALLAST (EMERGENCY)
C	CONDUIT
CA	CUSTOMER ASSISTANCE CALL CENTER
CAK	CUSTOMER ASSISTANCE KIOSK
CB	CIRCUIT BREAKER
CCTV	CLOSED CIRCUIT TELEVISION
CKT	CIRCUIT
CLG	CEILING
CM	COIN CHANGER MACHINE
COL	COLUMN
COMED	COMMONWEALTH EDISON CO.
CONFIG	CONFIGURATION
CONN	CONNECTION
CONT.	CONTINUATION
CP	CONTROL PANEL
CR	CARD READER
CT	CURRENT TRANSFORMER
CTA	CHICAGO TRANSIT AUTHORITY
CU	COPPER
CUH	ELECTRIC CABINET UNIT HEATER
DAS	DIGITAL ADVERTISING SIGN
DC	DIRECT CURRENT
DCC	DC CONTROLLER
DET	DETAIL
DIA	DIAMETER
DISC SW	DISCONNECT SWITCH
DMS	DIGITAL MESSAGE SIGN
DN	DOWN
DS	DISCONNECT SWITCH
DTS	MANUAL OPERATED DOUBLE THROW SWITCH
DWG	DRAWING
EA	EACH
EC	END CABINET
ECH	ELECTRIC CABINET HEATER
EF	EXHAUST FAN
EH	ELECTRIC HEATER
EIH	ELECTRIC INFRARED HEATER
ELEC	ELECTRIC
ELEV	ELEVATION
EM, E	EMERGENCY
EO	ELECTRICALLY OPERATED
EQUIP	EQUIPMENT
ER	EXISTING TO BE REMOVED
ES	ELECTRIC STRIKE
EUH	ELECTRIC UNIT HEATER
EVM	EXPRESS VENDING MACHINE
EWC	ELECTRIC WATER COOLER
EWH	ELECTRIC WALL HEATER
EXIST	EXISTING
EXP	EXPOSED
F	FUSE
FAAP	FIRE ALARM ANNUNCIATOR PANEL
FACP	FIRE ALARM CONTROL PANEL
FDR	FEEDER
FL	FLOOR
FLA	FULL LOAD AMPERES
FLEX	FLEXIBLE
FLUOR	FLUORESCENT
FMC	LIQUID TIGHT FLEXIBLE METAL CONDUIT
FO	FIBER OPTIC
FOE	FIBER OPTIC EQUIPMENT
FPB	FAN POWER BOX
FRE	FIBER REINFORCED CONDUIT
FS	FLOW SWITCH
FT	FEET, FOOT
GFI, GFCI	GROUND FAULT INTERRUPTER
GA	GAUGE
GAP	GENERATOR ANNUNCIATOR PANEL
GEN	GENERATOR
GRD	GROUND
GRS	GALVANIZED RIGID STEEL
H	HOT WIRE
HD	HAND DRYER
HDG	HOT DIPPED GALVANIZED
HOA	HAND-OFF-AUTO
HP	HORSEPOWER, HEATING PANEL
HT	HEIGHT
HTC	HEAT TRACE CABINET
HTR	HEATER
HWPP	HOT WATER PRIMARY PUMP
HWSP	HOT WATER SECONDARY PUMP
IC	INTERCOM
IH	INFRARED HEATER
IG	ISOLATED GROUND
IRH	INFRARED HEATER
ITC	INTERFACE TERMINAL CABINET
JB, J-BOX	JUNCTION BOX
KVA	KILOVOLT AMPERES
KW	KILOWATT
LAM	LAMINATED
LED	LIGHT EMITTING DIODE
LP	LIGHTING PANEL
LTG	LIGHTING
M	METER
MCC	MOTOR CONTROL CENTER
MCP	MAXIMUM CIRCUIT PROTECTION
MH	MOUNTING HEIGHT, MANHOLE
MECH	MECHANICAL
MISC	MISCELLANEOUS
MLO	MAIN LUG ONLY
MM	MULTI-MODE
MS	MOTION SENSOR
MT	METER FOR TENANT
MTG	MOUNTING
MTR	MOTOR
N	NEUTRAL WIRE
NA, N/A	NOT APPLICABLE
NC	NORMALLY CLOSED
NIC	NOT IN CONTRACT
NO	NORMALLY OPEN, NUMBER
NTS	NOT TO SCALE
NB	NORTH BOUND
NDP	NORMAL DISTRIBUTION PANEL
OH	OVERHEAD
OL	OVERLOAD
P	POLE
PA	PUBLIC ADDRESS SYSTEM
PB	PULL BOX, PUSH BUTTON
PC	PORTABLE COMPUTER
PDP	POWER DISTRIBUTION PANEL
PLTF	PLATFORM
PNL	PANEL
PRI	PRIMARY
PT	POTENTIAL TRANSFORMER
PWR	POWER
RCP	ALARM RELAY CONTROL PANEL
RDP	RELIABLE DISTRIBUTION PANEL
RECPT	RECEPTACLE
REL	RELIABLE TRANSPORTATION SYSTEM
REV	REVISION
RF	RETURN FAN
RG	ROTO GATE
RGS	RIGID GALVANIZED STEEL
RLP	RELIABLE LIGHT PANEL
RM	ROOM
RP	RECIRCULATING PUMP
RR	EXISTING TO BE RELOCATED
RTU	REMOTE TELEMETRY UNIT, ROOF TOP UNIT
RV	ROOF VENTILATOR
SAN	SANITARY
SB	SOUTH BOUND
SCADA	SUPERVIORY CONTROL AND DATA ACQUISITION
SE, SEP	SEWAGE EJECTOR PUMP
SEC	SECONDARY
SF	SUPPLY FAN
SHT	SHEET
SP	SUMP PUMP
SPD	SURGE PROTECTION DEVICE
STL	STEEL
SVM	SODA VENDING MACHINE
SW	SWITCH
SWBD	SWITCHBOARD
T, TEL	TELEPHONE
TB-"E"	TERMINAL STRIP R - DENOTES RELIABLE POWER N - DENOTES NORMAL POWER E - DENOTES EMERGENCY POWER
T-NR	TIE CIRCUIT BREAKER NORMAL-RELIABLE
TCP	TEMPERATURE CONTROL PANEL
TE	TOILET EXHAUST
TR, TRANS	TRANSFORMER
TS	TRANSFER SWITCH
TTC	TELEPHONE TERMINAL CABINET
TVSS	TRANSIENT VOLTAGE SURGE SUPPRESSION
TWP	TWISTED PAIR
UNO	UNLESS NOTED OTHERWISE
UH	UNIT HEATER
UL	UNDERWRITERS LABORATORIES
UPS	UNINTERRUPTIBLE POWER SUPPLY SYSTEM
UV	UNDER VOLTAGE
UVR	UNDER VOLTAGE RELAY
V	VOLTS
VAC	VOLTS ALTERNATING CURRENT
VAV	VARIABLE AIR VOLUME
VF	VENTILATION FAN
W	WATTS
WHE	WATER HEATER ELECTRIC
WP	WEATHERPROOF
W/	WITH
X	EXISTING TO BE REMOVED

DESIGN BY:									
DRAWN BY:									
CHECKED BY:									
APPROVED BY:		4	7/3/2023	ISSUED FOR BID	JM	EM	OS		
CDOT/APPROVED BY:		NO.	DATE	REVISIONS	DES.	DRW.	CHK.	DCCO	CDOT

TRANSYSTEMS
222 SOUTH RIVERSIDE PLAZA SUITE 610
CHICAGO, ILLINOIS 60606

SKIDMORE, OWINGS & MERRILL LLP
224 SOUTH MICHIGAN AVENUE, SUITE 1000
CHICAGO, ILLINOIS 60604

FACET ENGINEERING
4316 NORTH ELSTON AVENUE
CHICAGO, ILLINOIS 60641

CHICAGO DEPARTMENT OF TRANSPORTATION
DIVISION OF ENGINEERING

STATE / LAKE LOOP ELEVATED STATION
200 NORTH STATE STREET, CHICAGO, IL 60601

SPEC. NO.

GENERAL NOTES AND ABBREVIATIONS

DRAWING NO.
E-002

CDOT PROJECT D-1-209

DATE: 9/9/2022

REVISION NO.1

CITY OF CHICAGO DEPARTMENT OF BUILDINGS

GENERAL BUILDING REQUIREMENTS Chicago Building Code (CBC) 2018 Edition

ITEM	ISSUE	CHAPTER/ARTICLE	Ordinance Requirement	Actual	Requirement N/A	Location/ Sheet No.	Agency/ Test No.	REMARKS
ELECTRICAL								
1	Requirements for Electrical Installations	14E-1-110			Comply			
2	Branch Circuits	14E-2-210			Comply			
3	Feeders	14E-2-215			Comply			
4	Branch circuit feeder and service	14E-2-220			Comply			
5	Outside branch circuit and feeders	14E-2-225			Comply			
6	Services	14E-2-230			Comply			
7	Overcurrent Protection	14E-2-240			Comply			
8	Grounding	14E-2-250			Comply			
9	Surge Arrestors	14E-2-280			Comply			
10	Surge - Protective Devices	14E-2-285			Comply			
11	Wiring Methods	14E-3-300			Comply			
12	Conductors for General Wiring	14E-3-310			Comply			
13	Cabinets, Meter socket enclosures	14E-3-312			Comply			
14	Outlet Device, Device, Pull and Junction boxes, conduit bodies and fittings	14E-3-314			Comply			
15	Medium Voltage cable	14E-3-326			N/A			
16	Mineral Insulated MI Cable	14E-3-330			N/A			
17	Service entrance cable	14E-3-338			Comply			
18	Intermediate Metal conduit	14E-3-342			N/A			
19	Rigid metal conduit	14E-3-344			Comply			
20	Non metallic underground conduit with conductors	14E-3-354			Comply			
21	Electric metallic tubing (EMT)	14E-3-358			Comply			
22	Flexible metallic tubing	14E-3-360			Comply			
23	Surface Metal Raceways	14E-3-386			Comply			
24	Underfloor raceways	14E-3-390			N/A			
25	Cable Trays	14E-3-3392			Comply			
26	Open wiring or insulators	14E-3-398			N/A			
27	Flexible cords and cables	14E-4-400			N/A			
28	Fixture wires	14E-4-402			N/A			
29	Switches	14E-4-404			Comply			
30	Receptacles	14E-4-406			Comply			
31	Switchboards and Panelboards	14E-4-408			Comply			
32	Lighting fixtures	14E-4-410			Comply			
33	Lighting systems operating at 30V or less	14E-4-411			N/A			
34	Appliances	14E-4-422			N/A			
35	Fixed Electric Space heating equipment	14E-4-424			Comply			
36	Fixed outdoor Electric deicing and snow melting equipment	14E-4-426			Comply			
37	Fixed electric heating equipment for pipelines and vessels	14E-4-427			Comply			
38	Motors, motor circuits and controllers	14E-4-430			Comply			
39	Air-conditioning and Refrigerating equipment	14E-4-440			Comply			
40	Generators	14E-4-445			N/A			
41	Transformers and transformer vaults	14E-4-450			Comply			
42	Storage batteries	14E-4-480			N/A			
43	Elevators	14E-6-620			Comply			
44	Elevators	18-30-360	Fire Alarm Init Devices		Comply			
45	Information Technology Equipment	14E-6-645			N/A			
46	Solar Photovoltaic systems	14E-6-690			N/A			
47	Fire pumps	14E-6-695			N/A			
48	Emergency systems	14E-7-700			Comply			
49	Legally required standby generator systems	14E-7-701			N/A			
50	Optional standby systems	14E-7-702			N/A			
51	Fire alarm systems	14E-7-760 13-76			Comply			
52	Optical Fiber cables and raceways	14E-7-770			Comply			
53	Communication circuits	14E-7-800			Comply			
54	Radio and Television equipment	14E-7-810			N/A			

OTHER CODE REFERENCES:

55	Services-Special	14E-4-408.11			Comply			
56	Service Rating	14E-2-230.31 14E-2-230.42			Comply			
57	Service Disconnecting Means	14E-2-230.70			Comply			
58	Maximum number of disconnects	14E-2-230.71			Comply			
59	Number of Services	14E-2-230.40			Comply			
60	Ground Fault Requirements	14E-2-230.95			Comply			
61	Spaces about Electrical Equipment	14E-1-110.26 14E-3-384.8 14E-2-230.24	Overhead Cable		Comply Comply N/A			
62	Hi Rise	13-76			N/A			
63	Conduit Fill	14E-9-001, Tables 1 and 4			Comply			
64	Voltage Drop	14E-2-210.19 14E-2-215.2			Comply Comply			
65	Interrupting Rating	14E-1-110.9			Comply			

NO.	DATE	REVISIONS	DES.	DRW.	CHK.	DCCO	CDOT
4	7/3/2023	ISSUED FOR BID	EM	EM	JM		

DESIGN BY:
DRAWN BY:
CHECKED BY:
APPROVED BY:
CDOT/APPROVED BY:

TRANSYSTEMS
222 SOUTH RIVERSIDE PLAZA SUITE 610
CHICAGO, ILLINOIS 60606

SKIDMORE, OWINGS & MERRILL LLP
224 SOUTH MICHIGAN AVENUE, SUITE 1000
CHICAGO, ILLINOIS 60604

FACET ENGINEERING
4316 NORTH ELSTON AVENUE
CHICAGO, ILLINOIS 60641

CHICAGO DEPARTMENT OF TRANSPORTATION
DIVISION OF ENGINEERING

STATE / LAKE LOOP ELEVATED STATION
200 NORTH STATE STREET, CHICAGO, IL 60601

SPEC. NO.

ELECTRICAL CODE MATRIX

DRAWING NO. E-003

CDOT PROJECT D-1-209

DATE: 9/9/2022

REVISION NO.

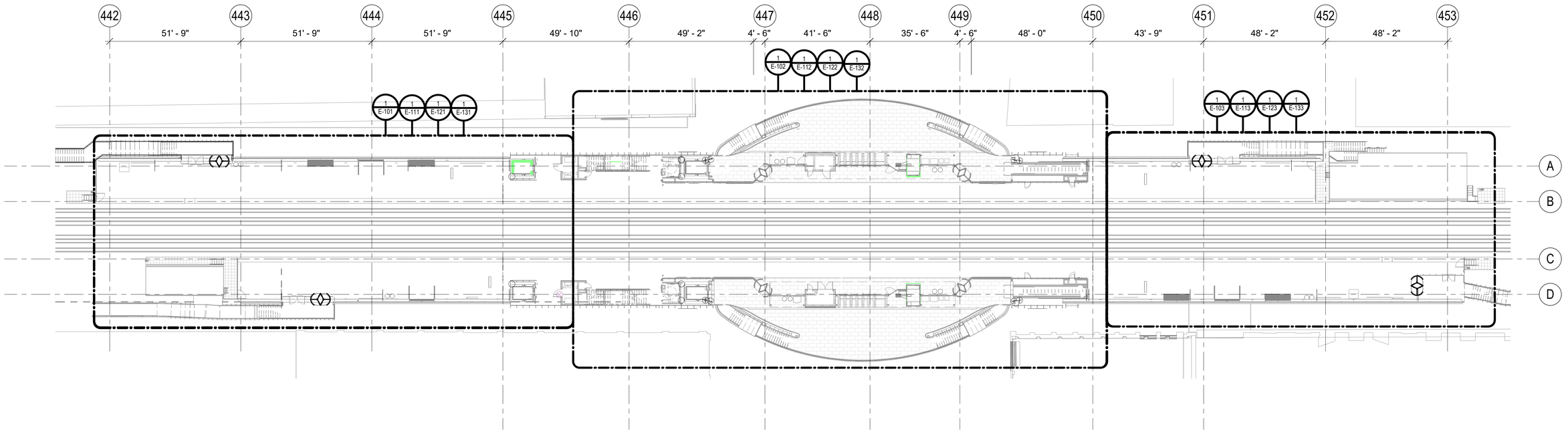

1 PLATFORM LEVEL - OVERALL PLAN

1" = 20'-0"

LAKE ST. KEY PLAN:

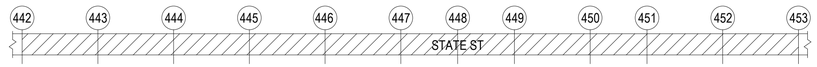

DESIGN BY:										
DRAWN BY:										
CHECKED BY:										
APPROVED BY:		4	7/3/2023	ISSUED FOR BID	EM	EM	JM			
CDOT/APPROVED BY:		NO.	DATE	REVISIONS	DES.	DRW.	CHK.	DCCO	CDOT	

TRANSYSTEMS
222 SOUTH RIVERSIDE PLAZA SUITE 610
CHICAGO, ILLINOIS 60606

SKIDMORE, OWINGS & MERRILL LLP
224 SOUTH MICHIGAN AVENUE, SUITE 1000
CHICAGO, ILLINOIS 60604

FACET ENGINEERING
4316 NORTH ELSTON AVENUE
CHICAGO, ILLINOIS 60641

CHICAGO DEPARTMENT OF TRANSPORTATION
DIVISION OF ENGINEERING

STATE / LAKE LOOP ELEVATED STATION
200 NORTH STATE STREET, CHICAGO, IL 60601

PLATFORM LEVEL - OVERALL PLAN

CDOT PROJECT D-1-209

DATE: 9/9/2022

SPEC. NO.

DRAWING NO. E-010

REVISION NO.

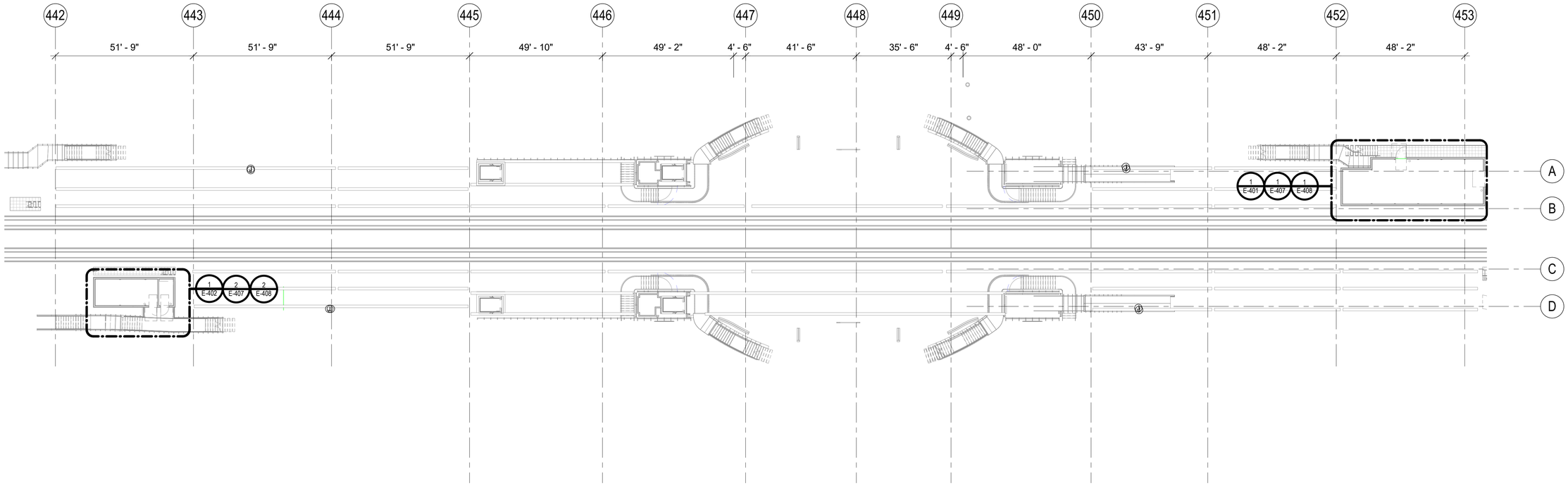

1 MEZZANINE LEVEL - OVERALL ELECTRICAL PLAN

1" = 20'-0"

LAKE ST. KEY PLAN:

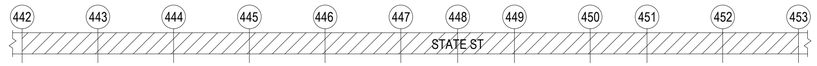

DESIGN BY:										
DRAWN BY:										
CHECKED BY:										
APPROVED BY:		4	7/3/2023	ISSUED FOR BID	EM	EM	JM			
CDOT/APPROVED BY:		NO.	DATE	REVISIONS	DES.	DRW.	CHK.	DCCO	CDOT	

TRANSYSTEMS
222 SOUTH RIVERSIDE PLAZA SUITE 610
CHICAGO, ILLINOIS 60606

SKIDMORE, OWINGS & MERRILL LLP
224 SOUTH MICHIGAN AVENUE, SUITE 1000
CHICAGO, ILLINOIS 60604

FACET ENGINEERING
4316 NORTH ELSTON AVENUE
CHICAGO, ILLINOIS 60641

CHICAGO DEPARTMENT OF TRANSPORTATION
DIVISION OF ENGINEERING

STATE / LAKE LOOP ELEVATED STATION
200 NORTH STATE STREET, CHICAGO, IL 60601

MEZZANINE LEVEL - OVERALL PLAN

CDOT PROJECT D-1-209

DATE: 9/9/2022

SPEC. NO.

DRAWING NO. E-011

REVISION NO.

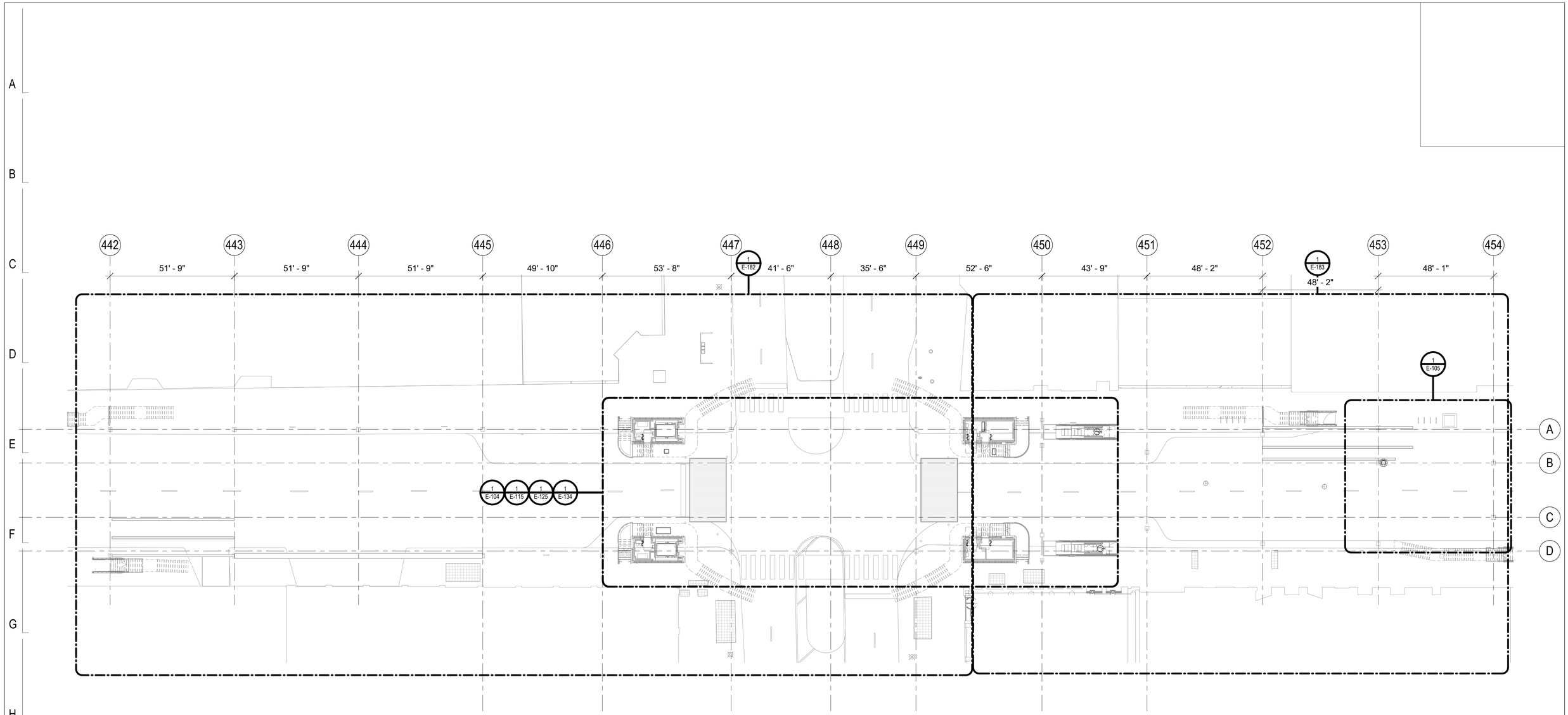

1 STREET LEVEL - OVERALL ELECTRICAL PLAN

1" = 20'-0"

LAKE ST. KEY PLAN:

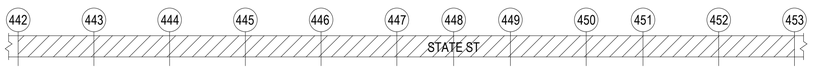

DESIGN BY:										
DRAWN BY:										
CHECKED BY:										
APPROVED BY:		4	7/3/2023	ISSUED FOR BID	EM	EM	JM			
CDOT/APPROVED BY:		NO.	DATE	REVISIONS	DES.	DRW.	CHK.	DCCO	CDOT	

TRANSYSTEMS
222 SOUTH RIVERSIDE PLAZA SUITE 610
CHICAGO, ILLINOIS 60606

SKIDMORE, OWINGS & MERRILL LLP
224 SOUTH MICHIGAN AVENUE, SUITE 1000
CHICAGO, ILLINOIS 60604

FACET ENGINEERING
DBE/MBE CERTIFIED
Performance • Respect • Initiation • Dedication • Experience
FACET ENGINEERING
4316 NORTH ELSTON AVENUE
CHICAGO, ILLINOIS 60641

CHICAGO DEPARTMENT
OF TRANSPORTATION
DIVISION OF ENGINEERING

STATE / LAKE LOOP ELEVATED STATION
200 NORTH STATE STREET, CHICAGO, IL 60601

STREET LEVEL - OVERALL PLAN

CDOT PROJECT D-1-209

DATE: 9/9/2022

SPEC. NO.

DRAWING NO.
E-012

REVISION NO.

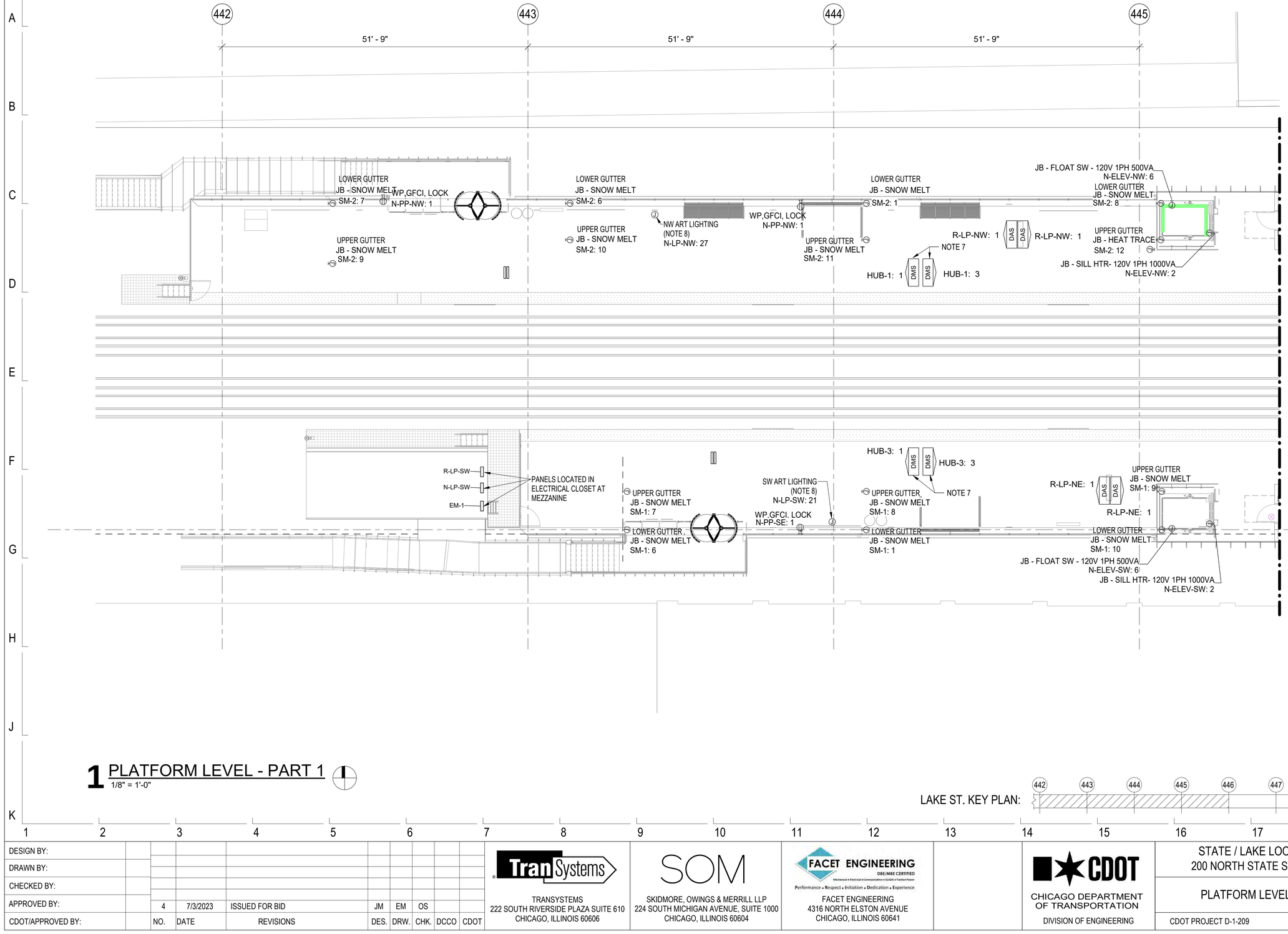

NOTES:

1. SEE DRAWING E-001 FOR ELECTRICAL SYMBOL LIST.
2. SEE DRAWING E-002 FOR ELECTRICAL GENERAL NOTES AND ABBREVIATIONS.
3. SEE DRAWING E-614 THROUGH E-621 FOR PANELBOARD SCHEDULES.
4. SEE DRAWING E-611 FOR CABLE AND CONDUIT SCHEDULE.
5. SEE DRAWING E-612 FOR EQUIPMENT SCHEDULE.
6. FURNISH AND INSTALL EQUIPMENT DISCONNECT SWITCHES IN STRICT COMPLIANCE WITH CHICAGO ELECTRICAL CODE REQUIREMENTS. INCLUDE NAMEPLATE ON EACH DISCONNECT SWITCH WHICH STATES ID, VOLTAGE, PHASE, AMPERES AND NEMA TYPE.
7. REFER TO DETAIL 7 ON E-506 AND DETAIL 7 ON ARCHITECTURAL DRAWING A-552 FOR LIGHTING AND CABLE TRAY INSTALLATION DETAIL.
8. JUNCTION BOX LOCATED BELOW SLAB. 3/4" GRS CONDUIT STUB UP THROUGH SLAB. CONTRACTOR TO COORDINATE FINAL LOCATION WITH CTA.

1 PLATFORM LEVEL - PART 1

1/8" = 1'-0"

LAKE ST. KEY PLAN:

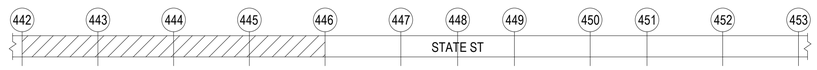

DESIGN BY:										
DRAWN BY:										
CHECKED BY:										
APPROVED BY:		4	7/3/2023	ISSUED FOR BID	JM	EM	OS			
CDOT/APPROVED BY:		NO.	DATE	REVISIONS	DES.	DRW.	CHK.	DCCO	CDOT	

TRANSYSTEMS
222 SOUTH RIVERSIDE PLAZA SUITE 610
CHICAGO, ILLINOIS 60606

SKIDMORE, OWINGS & MERRILL LLP
224 SOUTH MICHIGAN AVENUE, SUITE 1000
CHICAGO, ILLINOIS 60604

FACET ENGINEERING
4316 NORTH ELSTON AVENUE
CHICAGO, ILLINOIS 60641

CHICAGO DEPARTMENT
OF TRANSPORTATION
DIVISION OF ENGINEERING

STATE / LAKE LOOP ELEVATED STATION
200 NORTH STATE STREET, CHICAGO, IL 60601

PLATFORM LEVEL - POWER PLAN - WEST

CDOT PROJECT D-1-209 | DATE: 9/9/2022

SPEC. NO.

DRAWING NO.
E-101

REVISION NO.

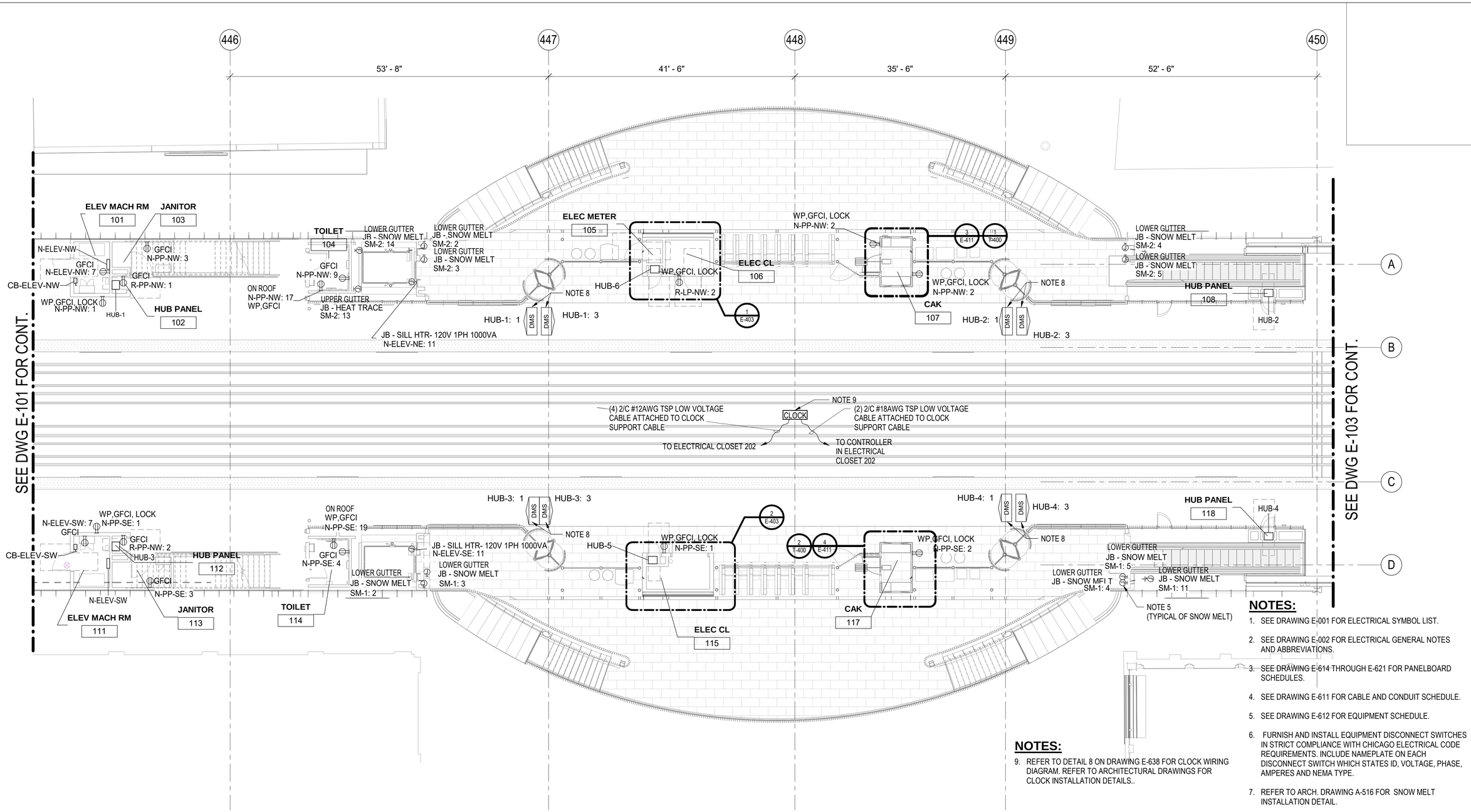

NOTES:

1. SEE DRAWING E-001 FOR ELECTRICAL SYMBOL LIST.
2. SEE DRAWING E-002 FOR ELECTRICAL GENERAL NOTES AND ABBREVIATIONS.
3. SEE DRAWING E-614 THROUGH E-621 FOR PANELBOARD SCHEDULES.
4. SEE DRAWING E-611 FOR CABLE AND CONDUIT SCHEDULE.
5. SEE DRAWING E-612 FOR EQUIPMENT SCHEDULE.
6. FURNISH AND INSTALL EQUIPMENT DISCONNECT SWITCHES IN STRICT COMPLIANCE WITH CHICAGO ELECTRICAL CODE REQUIREMENTS. INCLUDE NAMEPLATE ON EACH DISCONNECT SWITCH WHICH STATES ID, VOLTAGE, PHASE, AMPERES AND NEMA TYPE.
7. REFER TO ARCH. DRAWING A-516 FOR SNOW MELT INSTALLATION DETAIL.
8. REFER TO DETAIL 7 ON E-506 AND DETAIL 7 ON ARCHITECTURAL DRAWING A-552 FOR LIGHTING AND CABLE TRAY INSTALLATION DETAIL.

NOTES:

9. REFER TO DETAIL 8 ON DRAWING E-638 FOR CLOCK WIRING DIAGRAM. REFER TO ARCHITECTURAL DRAWINGS FOR CLOCK INSTALLATION DETAILS..

1 PLATFORM LEVEL - PART 2

1/8" = 1'-0"

LAKE ST. KEY PLAN:

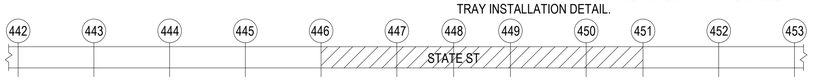

DESIGN BY:										
DRAWN BY:										
CHECKED BY:										
APPROVED BY:		4	7/3/2023	ISSUED FOR BID	JM	EM	OS			
CDOT/APPROVED BY:		NO.	DATE	REVISIONS	DES.	DRW.	CHK.	DCCO	CDOT	

TRANSYSTEMS
222 SOUTH RIVERSIDE PLAZA SUITE 610
CHICAGO, ILLINOIS 60606

SKIDMORE, OWINGS & MERRILL LLP
224 SOUTH MICHIGAN AVENUE, SUITE 1000
CHICAGO, ILLINOIS 60604

FACET ENGINEERING
4316 NORTH ELSTON AVENUE
CHICAGO, ILLINOIS 60641

CHICAGO DEPARTMENT OF TRANSPORTATION
DIVISION OF ENGINEERING

STATE / LAKE LOOP ELEVATED STATION
200 NORTH STATE STREET, CHICAGO, IL 60601

SPEC. NO.

PLATFORM LEVEL - POWER PLAN - CENTER

DRAWING NO.
E-102

CDOT PROJECT D-1-209

DATE: 9/9/2022

REVISION NO.1

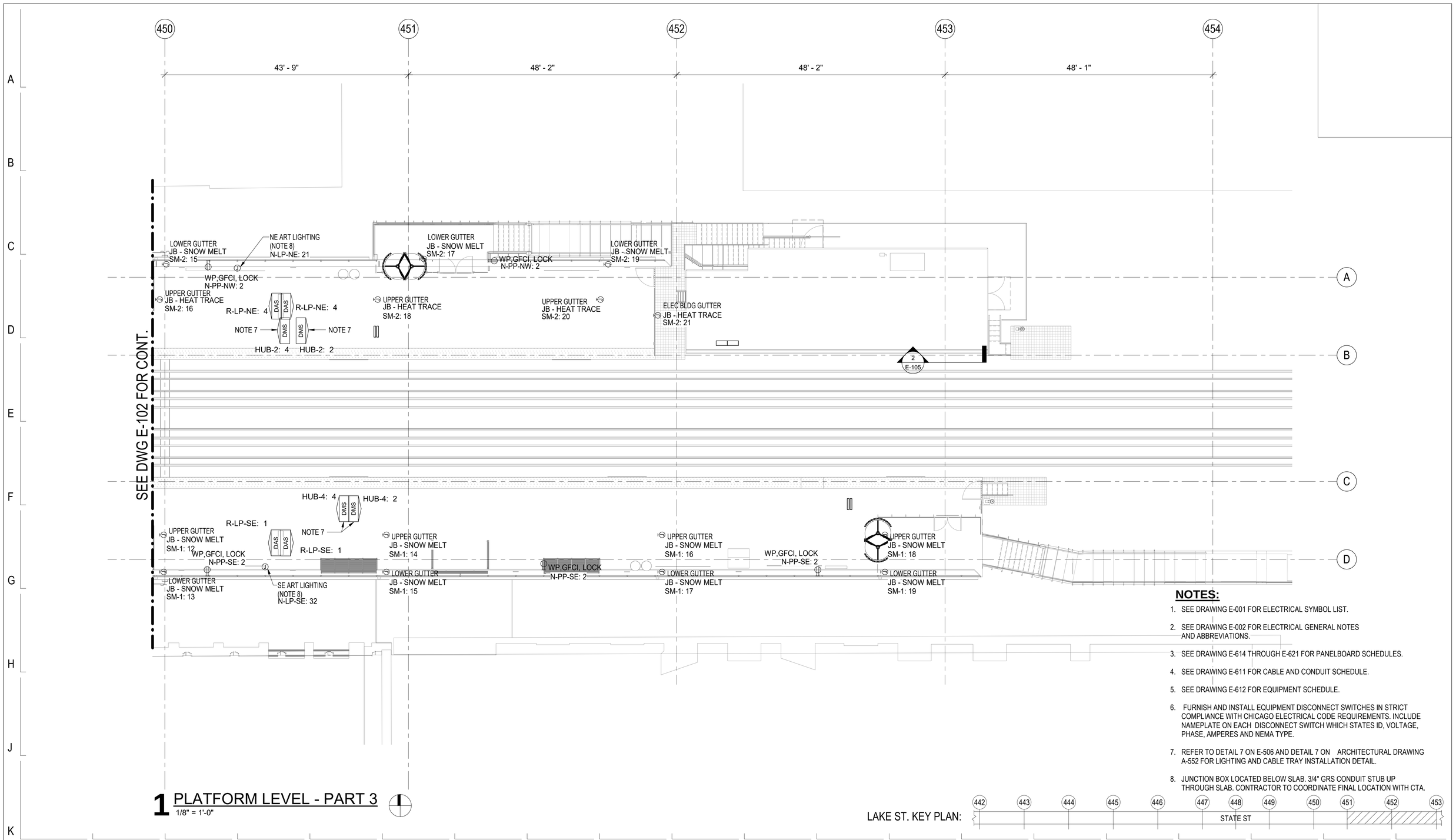

1 PLATFORM LEVEL - PART 3

1/8" = 1'-0"

NOTES:

1. SEE DRAWING E-001 FOR ELECTRICAL SYMBOL LIST.
2. SEE DRAWING E-002 FOR ELECTRICAL GENERAL NOTES AND ABBREVIATIONS.
3. SEE DRAWING E-614 THROUGH E-621 FOR PANELBOARD SCHEDULES.
4. SEE DRAWING E-611 FOR CABLE AND CONDUIT SCHEDULE.
5. SEE DRAWING E-612 FOR EQUIPMENT SCHEDULE.
6. FURNISH AND INSTALL EQUIPMENT DISCONNECT SWITCHES IN STRICT COMPLIANCE WITH CHICAGO ELECTRICAL CODE REQUIREMENTS. INCLUDE NAMEPLATE ON EACH DISCONNECT SWITCH WHICH STATES ID, VOLTAGE, PHASE, AMPERES AND NEMA TYPE.
7. REFER TO DETAIL 7 ON E-506 AND DETAIL 7 ON ARCHITECTURAL DRAWING A-552 FOR LIGHTING AND CABLE TRAY INSTALLATION DETAIL.
8. JUNCTION BOX LOCATED BELOW SLAB. 3/4" GRS CONDUIT STUB UP THROUGH SLAB. CONTRACTOR TO COORDINATE FINAL LOCATION WITH CTA.

LAKE ST. KEY PLAN:

DESIGN BY:										
DRAWN BY:										
CHECKED BY:										
APPROVED BY:		4	7/3/2023	ISSUED FOR BID	JM	EM	OS			
CDOT/APPROVED BY:		NO.	DATE	REVISIONS	DES.	DRW.	CHK.	DCCO	CDOT	

TRANSYSTEMS
222 SOUTH RIVERSIDE PLAZA SUITE 610
CHICAGO, ILLINOIS 60606

SKIDMORE, OWINGS & MERRILL LLP
224 SOUTH MICHIGAN AVENUE, SUITE 1000
CHICAGO, ILLINOIS 60604

FACET ENGINEERING
4316 NORTH ELSTON AVENUE
CHICAGO, ILLINOIS 60641

CHICAGO DEPARTMENT OF TRANSPORTATION
DIVISION OF ENGINEERING

STATE / LAKE LOOP ELEVATED STATION
200 NORTH STATE STREET, CHICAGO, IL 60601

PLATFORM LEVEL - POWER PLAN - EAST

CDOT PROJECT D-1-209

DATE: 9/9/2022

SPEC. NO.

DRAWING NO. E-103

REVISION NO.

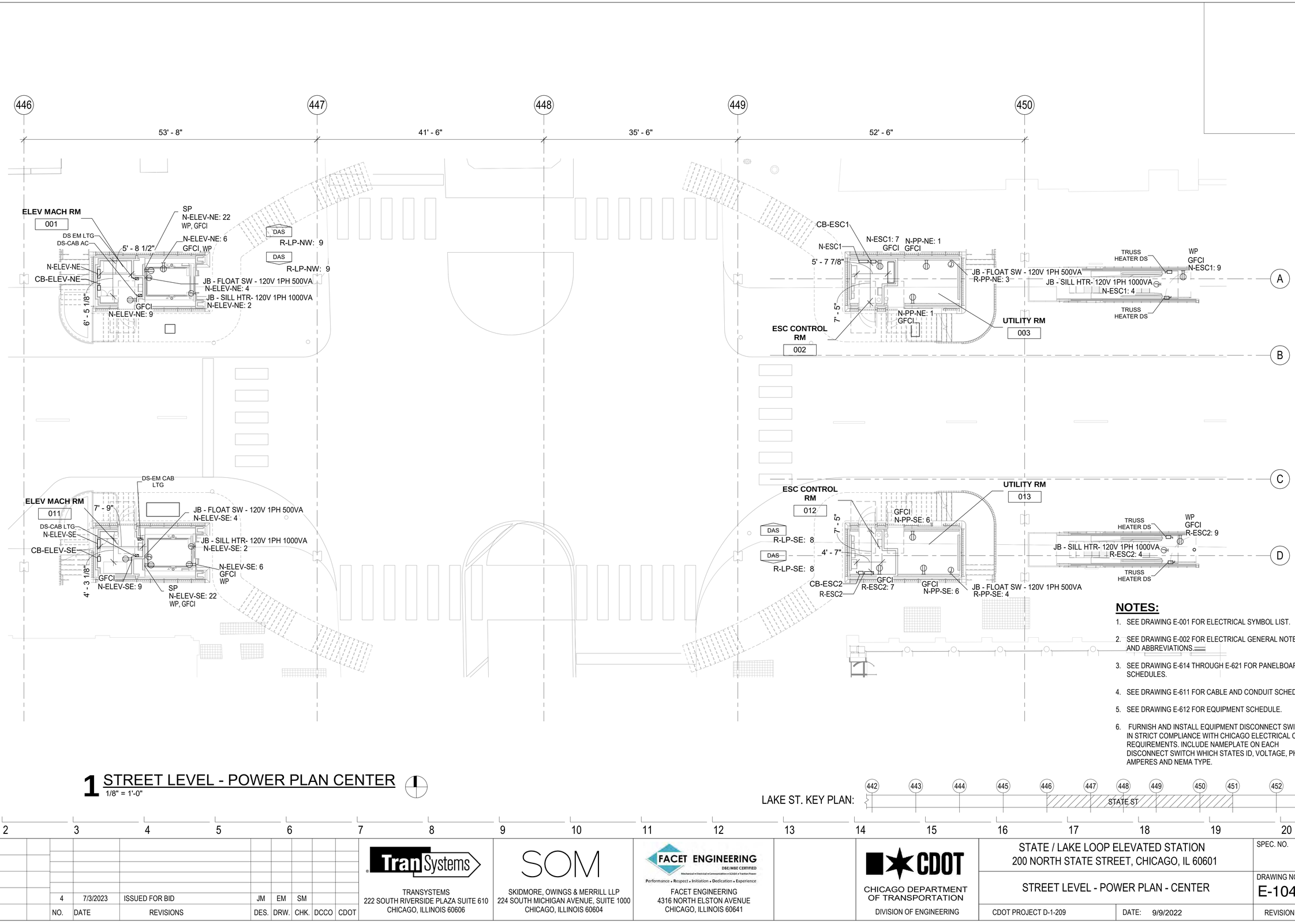

1 STREET LEVEL - POWER PLAN CENTER

1/8" = 1'-0"

NOTES:

1. SEE DRAWING E-001 FOR ELECTRICAL SYMBOL LIST.
2. SEE DRAWING E-002 FOR ELECTRICAL GENERAL NOTES AND ABBREVIATIONS.
3. SEE DRAWING E-614 THROUGH E-621 FOR PANELBOARD SCHEDULES.
4. SEE DRAWING E-611 FOR CABLE AND CONDUIT SCHEDULE.
5. SEE DRAWING E-612 FOR EQUIPMENT SCHEDULE.
6. FURNISH AND INSTALL EQUIPMENT DISCONNECT SWITCHES IN STRICT COMPLIANCE WITH CHICAGO ELECTRICAL CODE REQUIREMENTS. INCLUDE NAMEPLATE ON EACH DISCONNECT SWITCH WHICH STATES ID, VOLTAGE, PHASE, AMPERES AND NEMA TYPE.

LAKE ST. KEY PLAN:

DESIGN BY:										
DRAWN BY:										
CHECKED BY:										
APPROVED BY:		4	7/3/2023	ISSUED FOR BID	JM	EM	SM			
CDOT/APPROVED BY:		NO.	DATE	REVISIONS	DES.	DRW.	CHK.	DCCO	CDOT	

TRANSYSTEMS
222 SOUTH RIVERSIDE PLAZA SUITE 610
CHICAGO, ILLINOIS 60606

SKIDMORE, OWINGS & MERRILL LLP
224 SOUTH MICHIGAN AVENUE, SUITE 1000
CHICAGO, ILLINOIS 60604

FACET ENGINEERING
4316 NORTH ELSTON AVENUE
CHICAGO, ILLINOIS 60641

CHICAGO DEPARTMENT OF TRANSPORTATION
DIVISION OF ENGINEERING

STATE / LAKE LOOP ELEVATED STATION
200 NORTH STATE STREET, CHICAGO, IL 60601

SPEC. NO.

STREET LEVEL - POWER PLAN - CENTER

DRAWING NO.
E-104

CDOT PROJECT D-1-209

DATE: 9/9/2022

REVISION NO.1

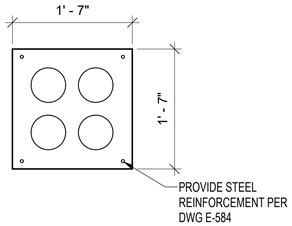

4 DUCTBANK SECTION
NTS

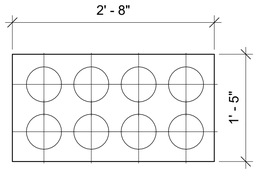

5 DUCTBANK SECTION COMED
NTS

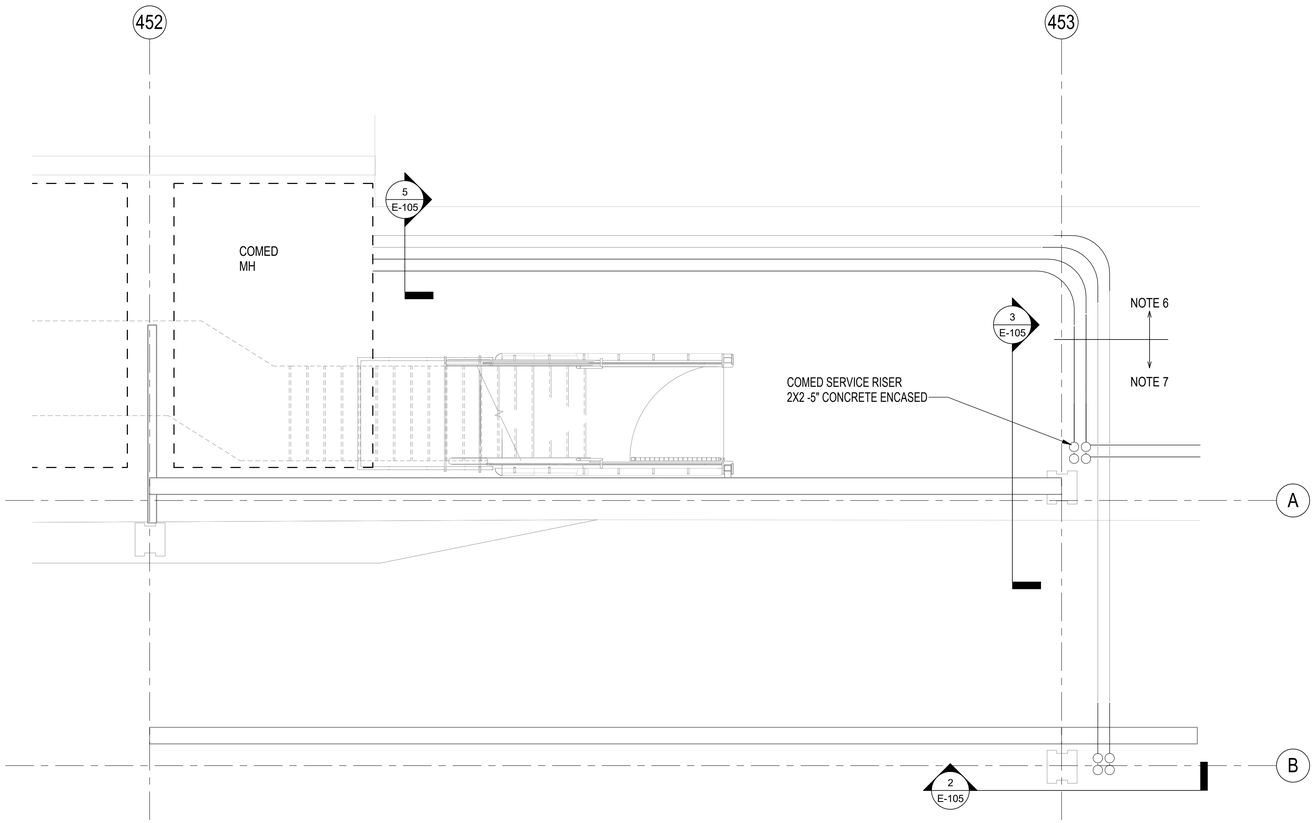

1 STREET LEVEL - POWER PLAN EAST
1/4" = 1'-0"

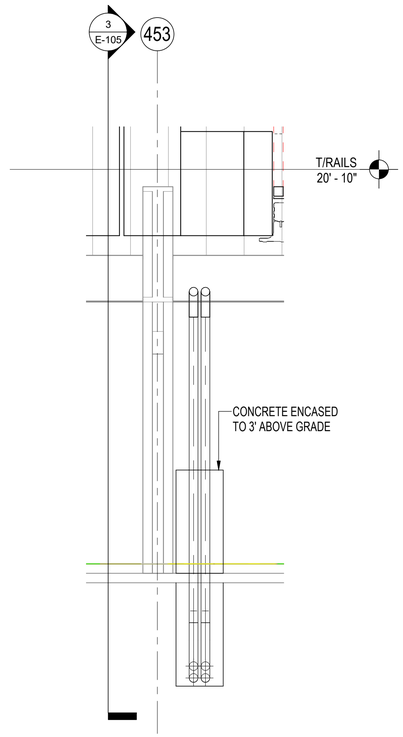

2 ELECTRIC SERVICE RISER LOOKING SOUTH
1/4" = 1'-0"

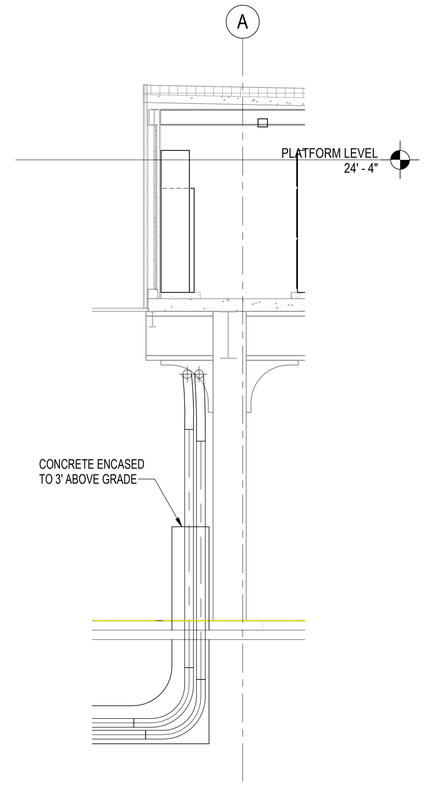

3 ELECTRIC SERVICE RISER NORTH
1/4" = 1'-0"

NOTES:

1. PROVIDE ALL DUCTBANK SHOWN, COORDINATE WORK WITH COMED.
2. SEE DRAWING E-001 FOR ELECTRICAL SYMBOL LIST.
3. SEE DRAWING E-002 FOR ELECTRICAL GENERAL NOTES AND ABBREVIATIONS.
4. SEE DRAWING E-614 THROUGH E-621 FOR PANELBOARD SCHEDULES.
5. SEE DRAWING E-611 FOR CABLE AND CONDUIT SCHEDULE.
6. COMED INSTALLED DUCTBANK. DUCTBANK ENDS APPROXIAMATELY 5'-6"' FROM FACE OF BENT COLUMN.
7. CONTRACTOR TO INTERCEPT EXISTING DUCTBANK AND EXTEND TO ELECTRICAL ROOM AS SHOWN.

DESIGN BY:									
DRAWN BY:									
CHECKED BY:									
APPROVED BY:		4	7/3/2023	ISSUED FOR BID	JM	EM	SM		
CDOT/APPROVED BY:		NO.	DATE	REVISIONS	DES.	DRW.	CHK.	DCCO	CDOT

TRANSYSTEMS
222 SOUTH RIVERSIDE PLAZA SUITE 610
CHICAGO, ILLINOIS 60606

SKIDMORE, OWINGS & MERRILL LLP
224 SOUTH MICHIGAN AVENUE, SUITE 1000
CHICAGO, ILLINOIS 60604

FACET ENGINEERING
4316 NORTH ELSTON AVENUE
CHICAGO, ILLINOIS 60641

CHICAGO DEPARTMENT
OF TRANSPORTATION
DIVISION OF ENGINEERING

STATE / LAKE LOOP ELEVATED STATION
200 NORTH STATE STREET, CHICAGO, IL 60601

STREET LEVEL - POWER PLAN -EAST

CDOT PROJECT D-1-209 | DATE: 9/9/2022

SPEC. NO.

DRAWING NO. E-105

REVISION NO.1

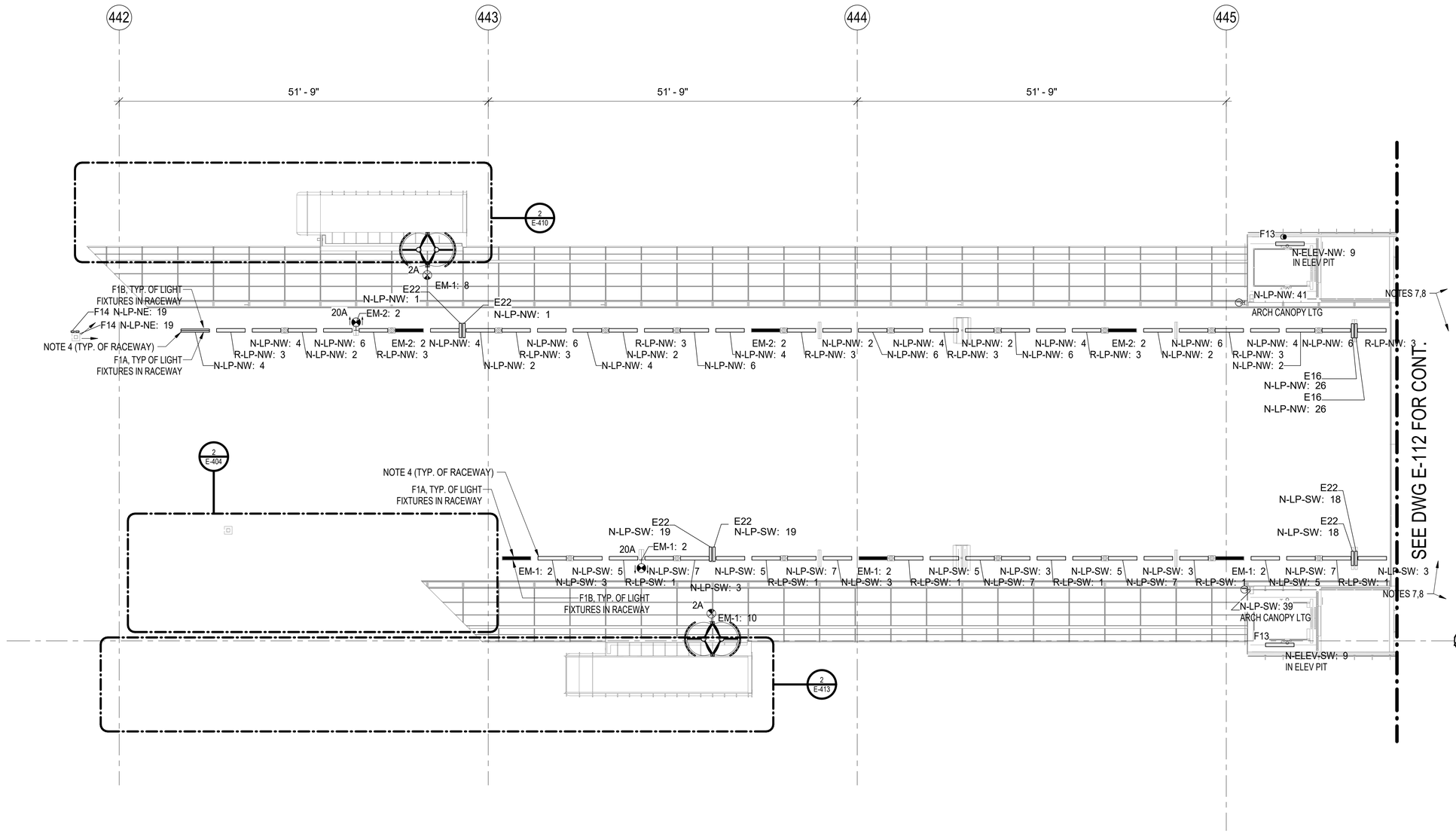

1 PLATFORM LEVEL LIGHTING PLANS - PART 1

1/8" = 1'-0"

NOTES:

1. SEE DRAWING E-001 FOR ELECTRICAL SYMBOL LIST.
2. SEE DRAWING E-002 FOR ELECTRICAL GENERAL NOTES AND ABBREVIATIONS.
3. SEE DRAWING E-604 FOR LIGHTING FIXTURE SCHEDULE.
4. REFER TO DETAIL 7 ON E-506 AND DETAIL 7 ON ARCHITECTURAL DRAWING A-552 FOR LIGHTING AND CABLE TRAY INSTALLATION DETAIL.

LAKE ST. KEY PLAN:

DESIGN BY:										
DRAWN BY:										
CHECKED BY:										
APPROVED BY:		4	7/3/2023	ISSUED FOR BID	JM	EM	OS			
CDOT/APPROVED BY:		NO.	DATE	REVISIONS	DES.	DRW.	CHK.	DCCO	CDOT	

TRANSYSTEMS
222 SOUTH RIVERSIDE PLAZA SUITE 610
CHICAGO, ILLINOIS 60606

SKIDMORE, OWINGS & MERRILL LLP
224 SOUTH MICHIGAN AVENUE, SUITE 1000
CHICAGO, ILLINOIS 60604

FACET ENGINEERING
4316 NORTH ELSTON AVENUE
CHICAGO, ILLINOIS 60641

CHICAGO DEPARTMENT OF TRANSPORTATION
DIVISION OF ENGINEERING

STATE / LAKE LOOP ELEVATED STATION
200 NORTH STATE STREET, CHICAGO, IL 60601

PLATFORM LEVEL - LIGHTING PLAN - WEST

CDOT PROJECT D-1-209

DATE: 9/9/2022

SPEC. NO.

DRAWING NO. E-111

REVISION NO.

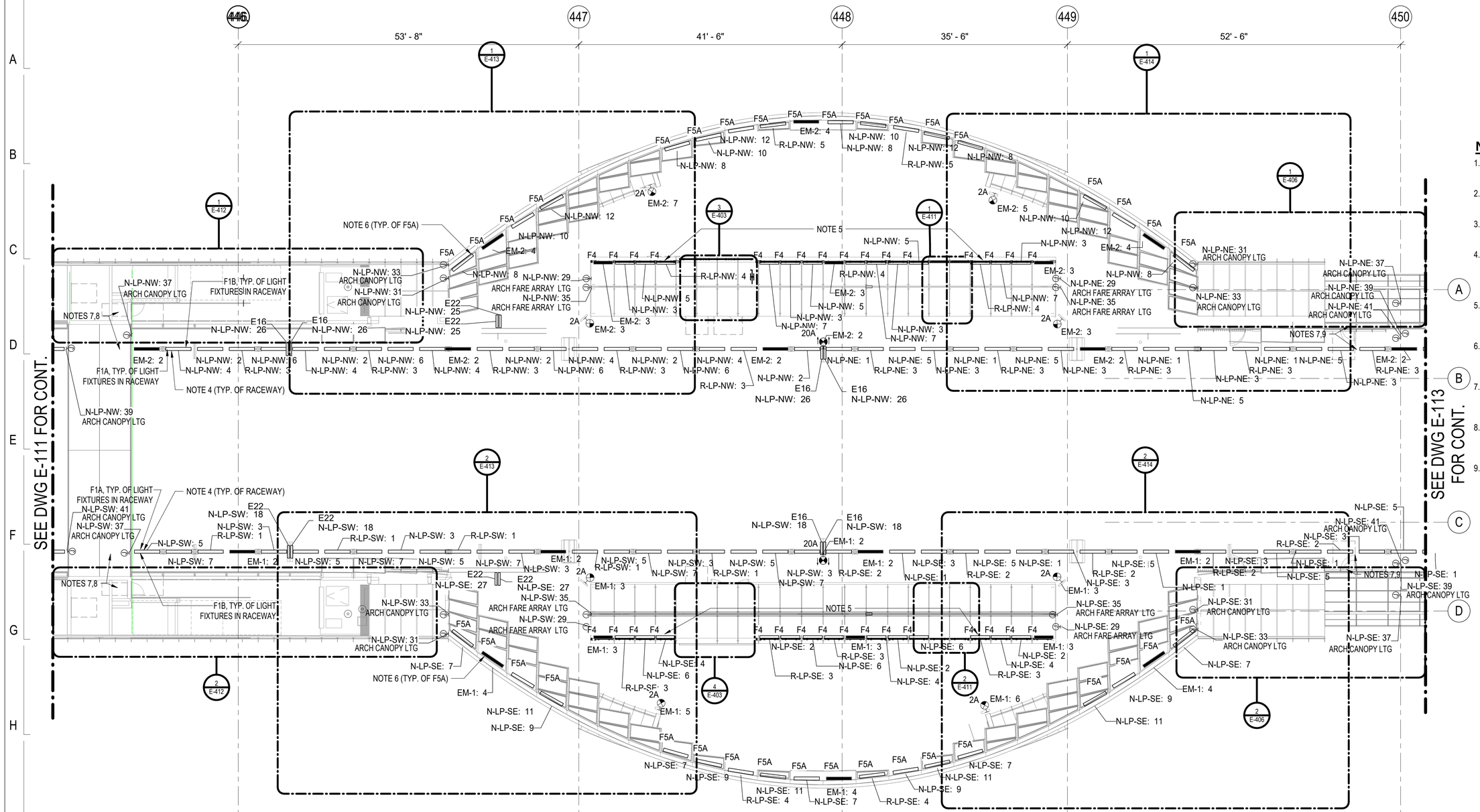

NOTES:

1. SEE DRAWING E-001 FOR ELECTRICAL SYMBOL LIST.
2. SEE DRAWING E-002 FOR ELECTRICAL GENERAL NOTES AND ABBREVIATIONS.
3. SEE DRAWING E-604 FOR LIGHTING FIXTURE SCHEDULE.
4. REFER TO DETAIL 7 ON E-506 AND DETAIL 7 ON ARCHITECTURAL DRAWING A-552 FOR LIGHTING AND CABLE TRAY INSTALLATION DETAIL.
5. REFER TO ARCH. DRAWING A-444 FOR FARE ARRAY CANOPY LIGHTING INSTALLATION DETAIL.
6. REFER TO DETAIL 1 ON ARCH. DRAWING A-512 FOR DOME CANOPY LIGHTING INSTALLATION DETAIL.
7. REFER TO DETAIL 10 ON ARCH. DRAWING A-552 FOR CROSS SECTION CONNECTION INTO RACEWAY.
8. REFER TO DETAIL 4 ON ARCH. DRAWING A-552 FOR WEST CONNECTION INTO RACEWAY.
9. REFER TO DETAIL 3 ON ARCH. DRAWING A-552 FOR EAST CONNECTION INTO RACEWAY.

1 PLATFORM LEVEL LIGHTING PLANS - PART 2

1/8" = 1'-0"

LAKE ST. KEY PLAN:

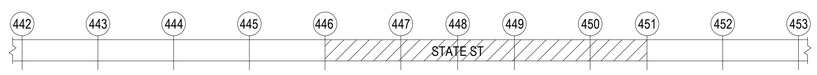

DESIGN BY:										
DRAWN BY:										
CHECKED BY:										
APPROVED BY:		4	7/3/2023	ISSUED FOR BID	JM	EM	OS			
CDOT/APPROVED BY:		NO.	DATE	REVISIONS	DES.	DRW.	CHK.	DCCO	CDOT	

TRANSYSTEMS
222 SOUTH RIVERSIDE PLAZA SUITE 610
CHICAGO, ILLINOIS 60606

SKIDMORE, OWINGS & MERRILL LLP
224 SOUTH MICHIGAN AVENUE, SUITE 1000
CHICAGO, ILLINOIS 60604

FACET ENGINEERING
4316 NORTH ELSTON AVENUE
CHICAGO, ILLINOIS 60641

CHICAGO DEPARTMENT OF TRANSPORTATION
DIVISION OF ENGINEERING

STATE / LAKE LOOP ELEVATED STATION
200 NORTH STATE STREET, CHICAGO, IL 60601

SPEC. NO.

PLATFORM LEVEL - LIGHTING PLAN - CENTER

DRAWING NO. E-112

CDOT PROJECT D-1-209

DATE: 9/9/2022

REVISION NO.

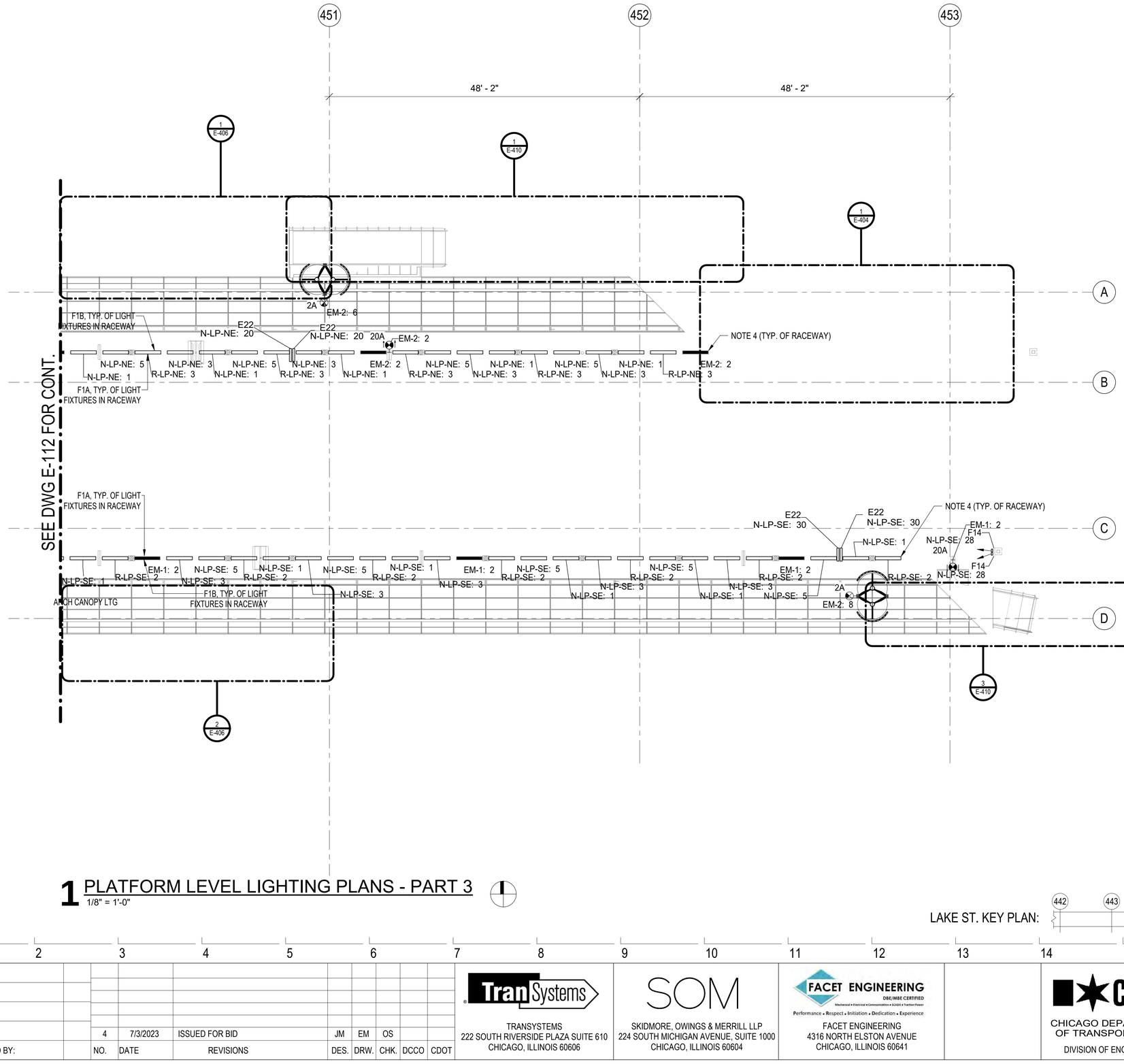

NOTES:

1. SEE DRAWING E-001 FOR ELECTRICAL SYMBOL LIST.
2. SEE DRAWING E-002 FOR ELECTRICAL GENERAL NOTES AND ABBREVIATIONS.
3. SEE DRAWING E-604 FOR LIGHTING FIXTURE SCHEDULE.
4. REFER TO DETAIL 7 ON E-506 AND DETAIL 7 ON ARCHITECTURAL DRAWING A-552 FOR LIGHTING AND CABLE TRAY INSTALLATION DETAIL.

1 PLATFORM LEVEL LIGHTING PLANS - PART 3

1/8" = 1'-0"

LAKE ST. KEY PLAN:

DESIGN BY:										
DRAWN BY:										
CHECKED BY:										
APPROVED BY:		4	7/3/2023	ISSUED FOR BID	JM	EM	OS			
CDOT/APPROVED BY:		NO.	DATE	REVISIONS	DES.	DRW.	CHK.	DCCO	CDOT	

TRANSYSTEMS
222 SOUTH RIVERSIDE PLAZA SUITE 610
CHICAGO, ILLINOIS 60606

SKIDMORE, OWINGS & MERRILL LLP
224 SOUTH MICHIGAN AVENUE, SUITE 1000
CHICAGO, ILLINOIS 60604

FACET ENGINEERING
4316 NORTH ELSTON AVENUE
CHICAGO, ILLINOIS 60641

CHICAGO DEPARTMENT OF TRANSPORTATION
DIVISION OF ENGINEERING

STATE / LAKE LOOP ELEVATED STATION
200 NORTH STATE STREET, CHICAGO, IL 60601

SPEC. NO.

PLATFORM LEVEL - LIGHTING PLAN - EAST

DRAWING NO. E-113

CDOT PROJECT D-1-209

DATE: 9/9/2022

REVISION NO.

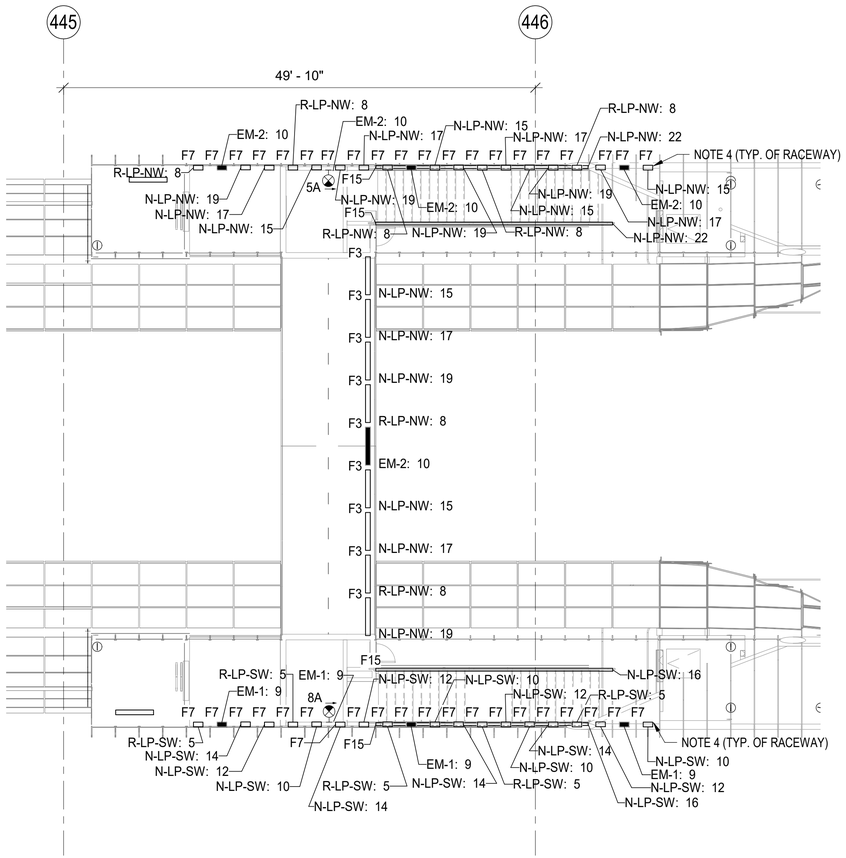

1 FLYOVER LEVEL LIGHTING PLAN

1/8" = 1'-0"

NOTES:

1. SEE DRAWING E-001 FOR ELECTRICAL SYMBOL LIST.
2. SEE DRAWING E-002 FOR ELECTRICAL GENERAL NOTES AND ABBREVIATIONS.
3. SEE DRAWING E-604 FOR LIGHTING FIXTURE SCHEDULE.
4. REFER TO DETAILS 1 AND 6 ON ARCH. DRAWING A-523 FOR FLYOVER LIGHTING INSTALLATION DETAIL.

LAKE ST. KEY PLAN:

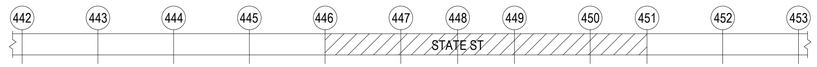

DESIGN BY:										
DRAWN BY:										
CHECKED BY:										
APPROVED BY:		4	7/3/2023	ISSUED FOR BID	JM	EM	OS			
CDOT/APPROVED BY:		NO.	DATE	REVISIONS	DES.	DRW.	CHK.	DCCO	CDOT	

TRANSYSTEMS
222 SOUTH RIVERSIDE PLAZA SUITE 610
CHICAGO, ILLINOIS 60606

SKIDMORE, OWINGS & MERRILL LLP
224 SOUTH MICHIGAN AVENUE, SUITE 1000
CHICAGO, ILLINOIS 60604

FACET ENGINEERING
DBE/MBE CERTIFIED
Performance • Respect • Initiation • Dedication • Experience
FACET ENGINEERING
4316 NORTH ELSTON AVENUE
CHICAGO, ILLINOIS 60641

CHICAGO DEPARTMENT OF TRANSPORTATION
DIVISION OF ENGINEERING

STATE / LAKE LOOP ELEVATED STATION
200 NORTH STATE STREET, CHICAGO, IL 60601

SPEC. NO.

FLYOVER LEVEL - LIGHTING PLAN

DRAWING NO.
E-114

CDOT PROJECT D-1-209

DATE: 9/9/2022

REVISION NO.

NOTES:

1. SEE DRAWING E-001 FOR ELECTRICAL SYMBOL LIST.
2. SEE DRAWING E-002 FOR ELECTRICAL GENERAL NOTES AND ABBREVIATIONS.
3. SEE DRAWING E-604 FOR LIGHTING FIXTURE SCHEDULE.

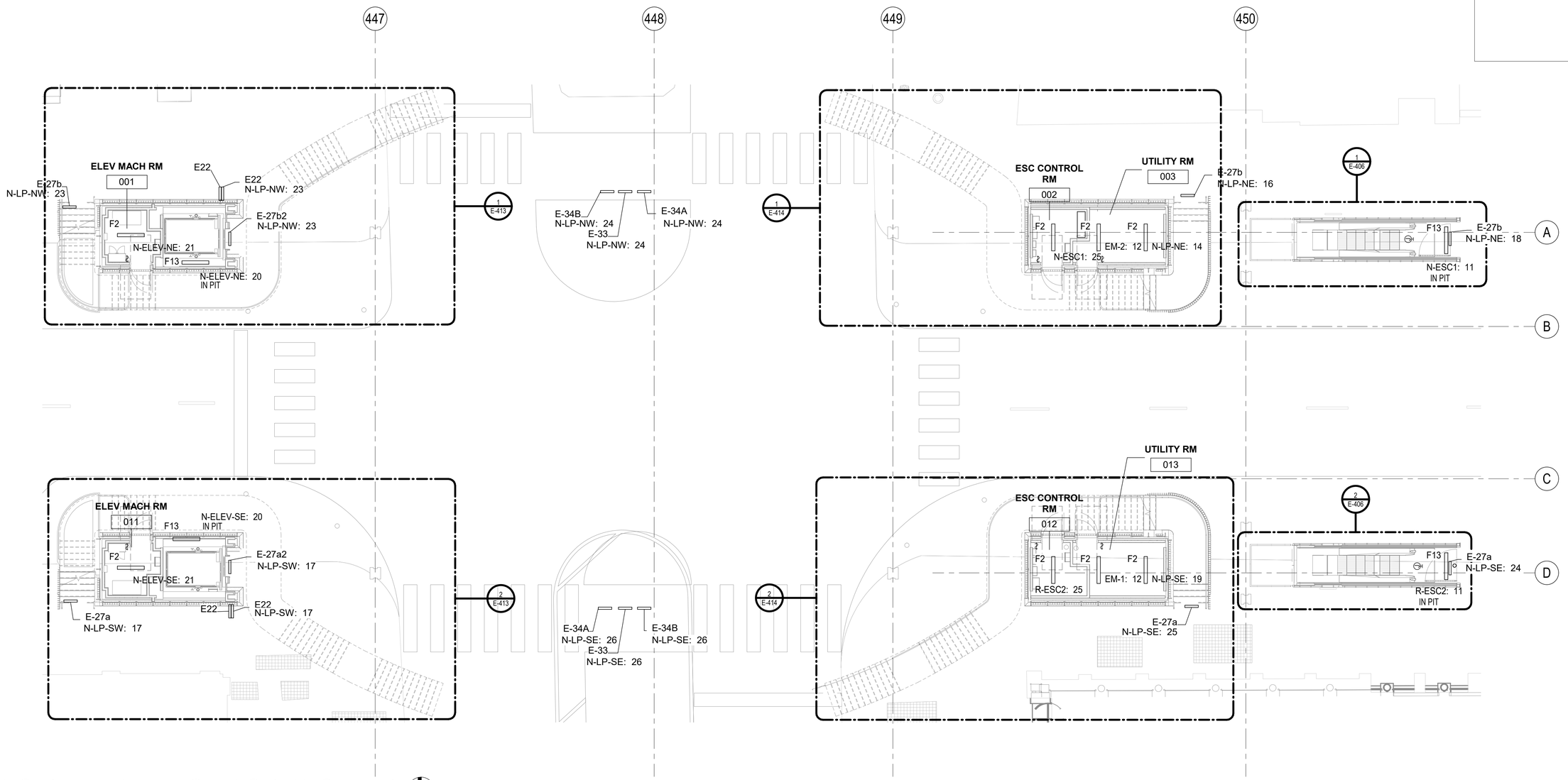

1 STREET LEVEL - LIGHTING PLAN CENTER

1/8" = 1'-0"

LAKE ST. KEY PLAN:

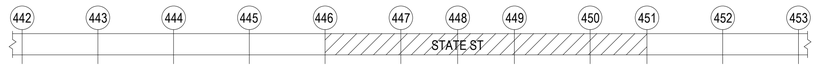

DESIGN BY:									
DRAWN BY:									
CHECKED BY:									
APPROVED BY:		4	7/3/2023	ISSUED FOR BID	EM	EM	JM		
CDOT/APPROVED BY:		NO.	DATE	REVISIONS	DES.	DRW.	CHK.	DCCO	CDOT

TRANSYSTEMS
222 SOUTH RIVERSIDE PLAZA SUITE 610
CHICAGO, ILLINOIS 60606

SKIDMORE, OWINGS & MERRILL LLP
224 SOUTH MICHIGAN AVENUE, SUITE 1000
CHICAGO, ILLINOIS 60604

FACET ENGINEERING
4316 NORTH ELSTON AVENUE
CHICAGO, ILLINOIS 60641

CHICAGO DEPARTMENT OF TRANSPORTATION
DIVISION OF ENGINEERING

STATE / LAKE LOOP ELEVATED STATION
200 NORTH STATE STREET, CHICAGO, IL 60601

STREET LEVEL - LIGHTING PLAN

CDOT PROJECT D-1-209

DATE: 9/9/2022

SPEC. NO.

DRAWING NO. E-115

REVISION NO.

NOTES:

1. SEE DRAWING E-001 FOR ELECTRICAL SYMBOL LIST.
2. SEE DRAWING E-002 FOR ELECTRICAL GENERAL NOTES AND ABBREVIATIONS.
3. SEE DRAWING E-633 FIRE ALARM RISER DIAGRAM FOR CONDUIT AND WIRING REQUIREMENTS.
4. ELEVATOR HEAT DETECTOR SURFACE MOUNTED CENTERED IN SOFFIT. REFER TO ARCHITECTURAL DRAWING A-162 FOR DETAILS.

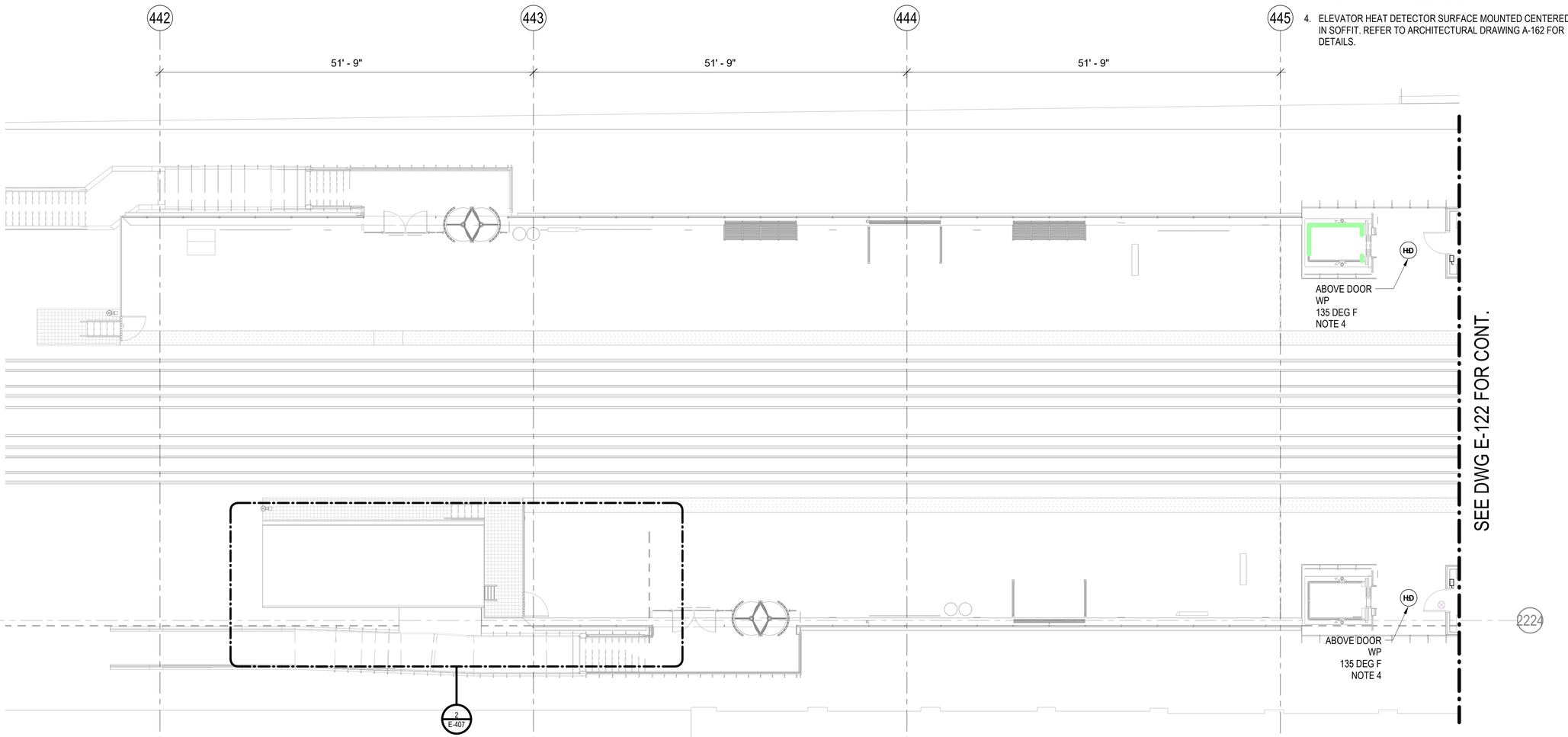

1 PLATFORM LEVEL FIRE ALARM - PART 1

1/8" = 1'-0"

LAKE ST. KEY PLAN:

DESIGN BY:										
DRAWN BY:										
CHECKED BY:										
APPROVED BY:		4	7/3/2023	ISSUED FOR BID	JM	EM	OS			
CDOT/APPROVED BY:		NO.	DATE	REVISIONS	DES.	DRW.	CHK.	DCCO	CDOT	

TRANSYSTEMS
222 SOUTH RIVERSIDE PLAZA SUITE 610
CHICAGO, ILLINOIS 60606

SKIDMORE, OWINGS & MERRILL LLP
224 SOUTH MICHIGAN AVENUE, SUITE 1000
CHICAGO, ILLINOIS 60604

FACET ENGINEERING
4316 NORTH ELSTON AVENUE
CHICAGO, ILLINOIS 60641

CHICAGO DEPARTMENT OF TRANSPORTATION
DIVISION OF ENGINEERING

STATE / LAKE LOOP ELEVATED STATION
200 NORTH STATE STREET, CHICAGO, IL 60601

PLATFORM LEVEL - FIRE ALARM PLAN - WEST

CDOT PROJECT D-1-209 | DATE: 9/9/2022

SPEC. NO.

DRAWING NO. E-121

REVISION NO.

NOTES:

1. SEE DRAWING E-001 FOR ELECTRICAL SYMBOL LIST.
2. SEE DRAWING E-002 FOR ELECTRICAL GENERAL NOTES AND ABBREVIATIONS.
3. SEE DRAWING E-633 FIRE ALARM RISER DIAGRAM FOR CONDUIT AND WIRING REQUIREMENTS.
4. REFER TO A-521 FOR INSTALLATION DETAIL.

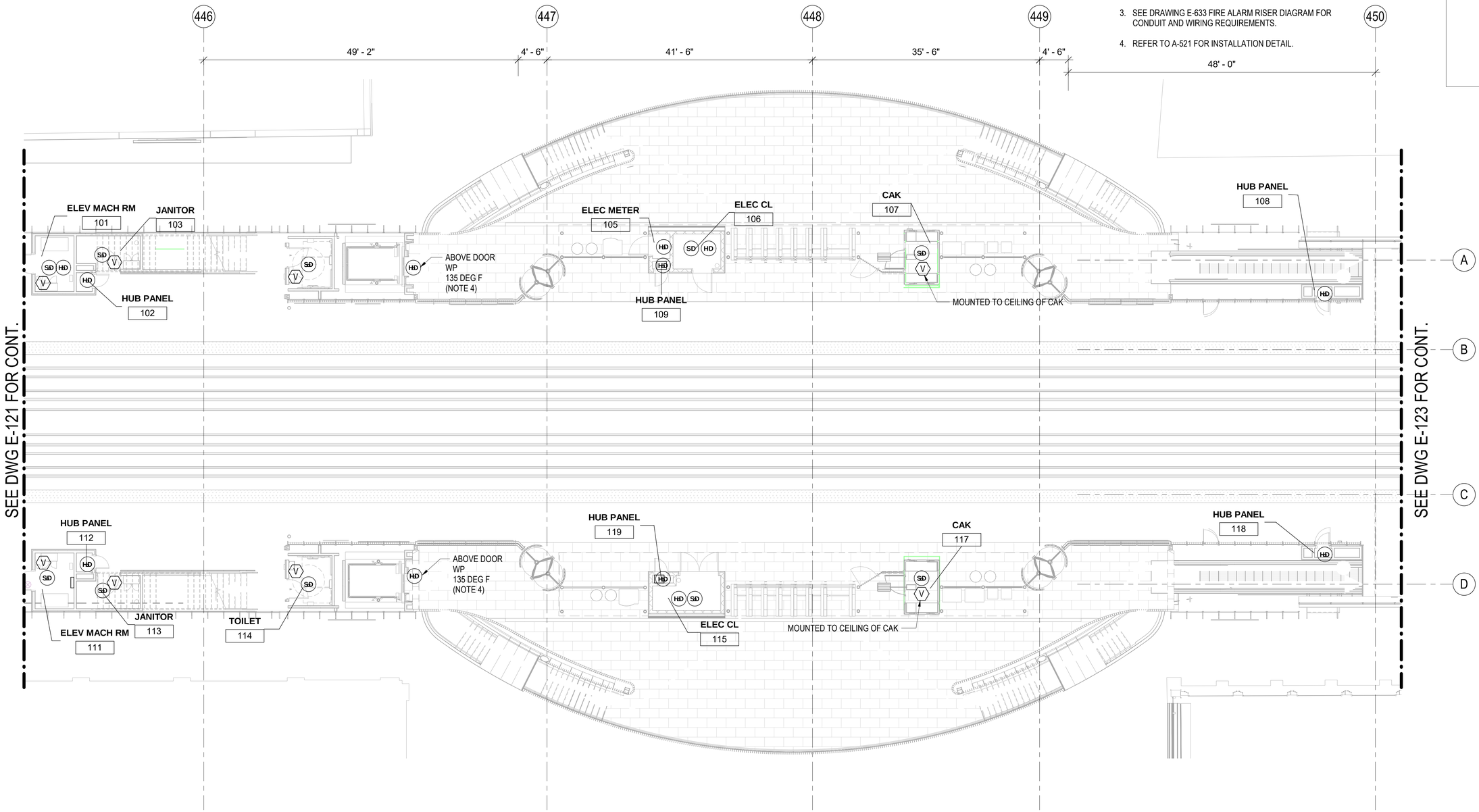

1 PLATFORM LEVEL FIRE ALARM - PART 2

1/8" = 1'-0"

LAKE ST. KEY PLAN:

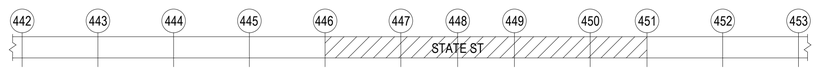

DESIGN BY:										
DRAWN BY:										
CHECKED BY:										
APPROVED BY:		4	7/3/2023	ISSUED FOR BID	JM	EM	OS			
CDOT/APPROVED BY:		NO.	DATE	REVISIONS	DES.	DRW.	CHK.	DCCO	CDOT	

TRANSYSTEMS
222 SOUTH RIVERSIDE PLAZA SUITE 610
CHICAGO, ILLINOIS 60606

SKIDMORE, OWINGS & MERRILL LLP
224 SOUTH MICHIGAN AVENUE, SUITE 1000
CHICAGO, ILLINOIS 60604

FACET ENGINEERING
4316 NORTH ELSTON AVENUE
CHICAGO, ILLINOIS 60641

CHICAGO DEPARTMENT OF TRANSPORTATION
DIVISION OF ENGINEERING

STATE / LAKE LOOP ELEVATED STATION
200 NORTH STATE STREET, CHICAGO, IL 60601

PLATFORM LEVEL - FIRE ALARM PLAN - CENTER

CDOT PROJECT D-1-209

DATE: 9/9/2022

SPEC. NO.

DRAWING NO. E-122

REVISION NO.

NOTES:

1. SEE DRAWING E-001 FOR ELECTRICAL SYMBOL LIST.
2. SEE DRAWING E-002 FOR ELECTRICAL GENERAL NOTES AND ABBREVIATIONS.
3. SEE DRAWING E-633 FIRE ALARM RISER DIAGRAM FOR CONDUIT AND WIRING REQUIREMENTS.

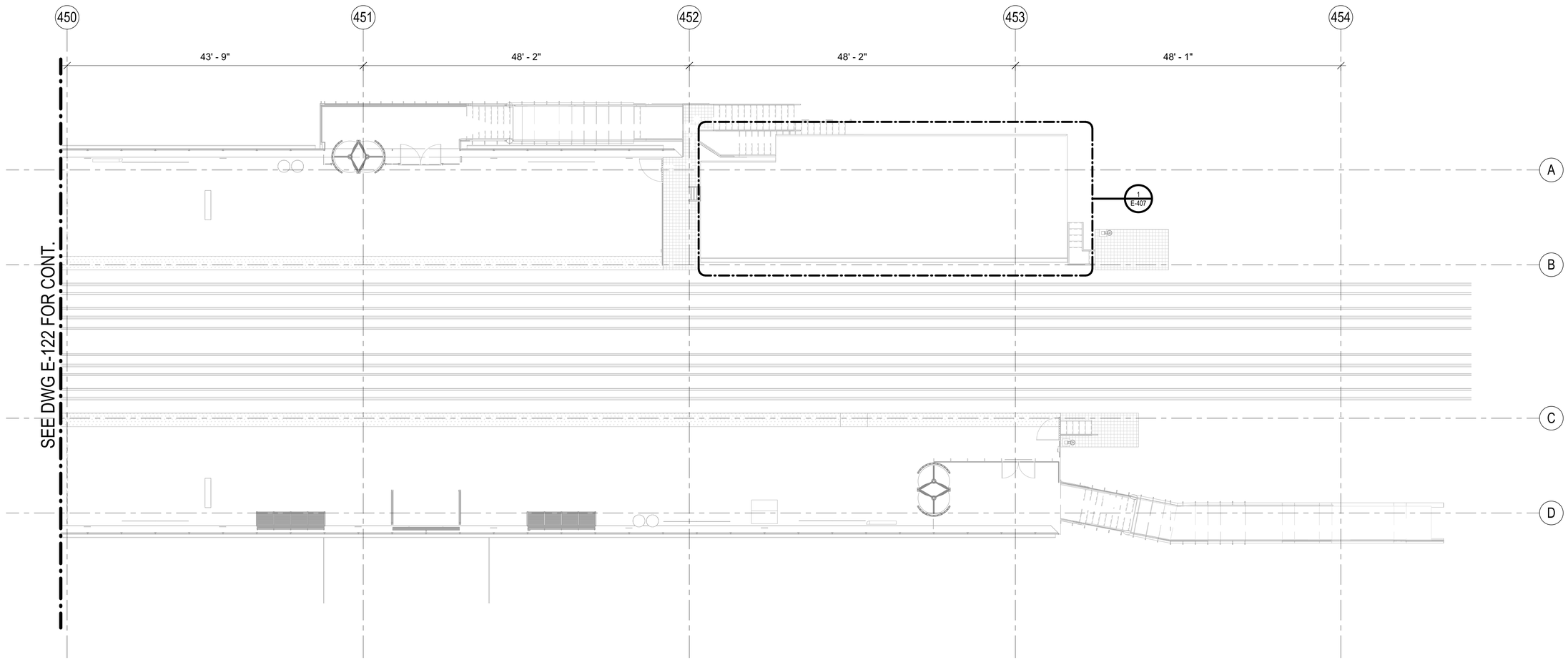

1 PLATFORM LEVEL FIRE ALARM - PART 3
1/8" = 1'-0"

LAKE ST. KEY PLAN:

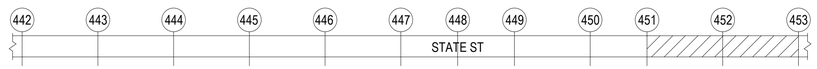

DESIGN BY:									
DRAWN BY:									
CHECKED BY:									
APPROVED BY:		4	7/3/2023	ISSUED FOR BID	JM	EM	OS		
CDOT/APPROVED BY:		NO.	DATE	REVISIONS	DES.	DRW.	CHK.	DCCO	CDOT

TRANSYSTEMS
222 SOUTH RIVERSIDE PLAZA SUITE 610
CHICAGO, ILLINOIS 60606

SKIDMORE, OWINGS & MERRILL LLP
224 SOUTH MICHIGAN AVENUE, SUITE 1000
CHICAGO, ILLINOIS 60604

FACET ENGINEERING
4316 NORTH ELSTON AVENUE
CHICAGO, ILLINOIS 60641

CHICAGO DEPARTMENT OF TRANSPORTATION
DIVISION OF ENGINEERING

STATE / LAKE LOOP ELEVATED STATION
200 NORTH STATE STREET, CHICAGO, IL 60601

PLATFORM LEVEL - FIRE ALARM PLAN - EAST

CDOT PROJECT D-1-209 | DATE: 9/9/2022

SPEC. NO.

DRAWING NO. E-123

REVISION NO.

NOTES:

1. SEE DRAWING E-001 FOR ELECTRICAL SYMBOL LIST.
2. SEE DRAWING E-002 FOR ELECTRICAL GENERAL NOTES AND ABBREVIATIONS.
3. SEE DRAWING E-633 FIRE ALARM RISER DIAGRAM FOR CONDUIT AND WIRING REQUIREMENTS.

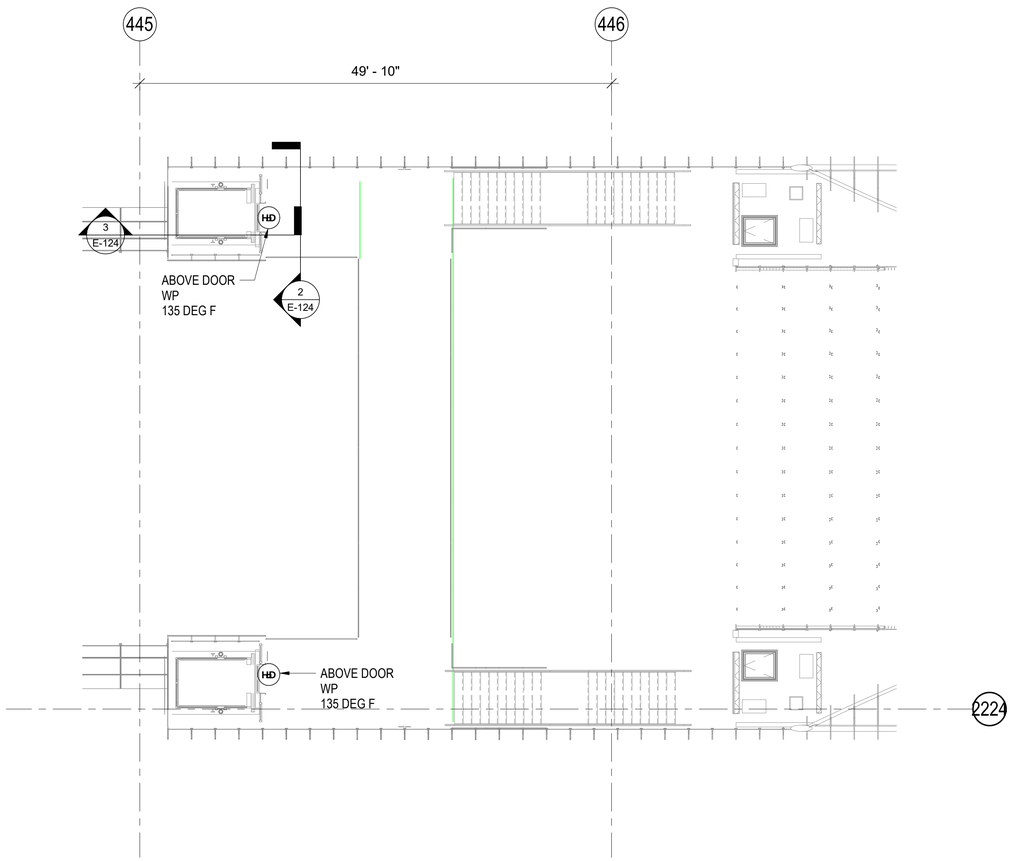

1 FLYOVER LEVEL FIRE ALARM PLAN
1/8" = 1'-0"

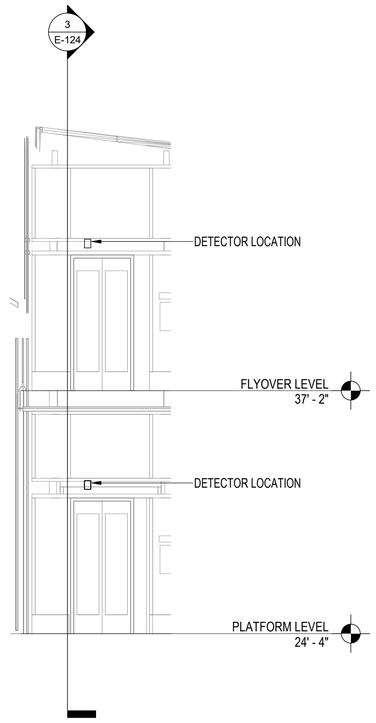

2 ELEVATOR FLYOVER ELEVATION
1/4" = 1'-0"

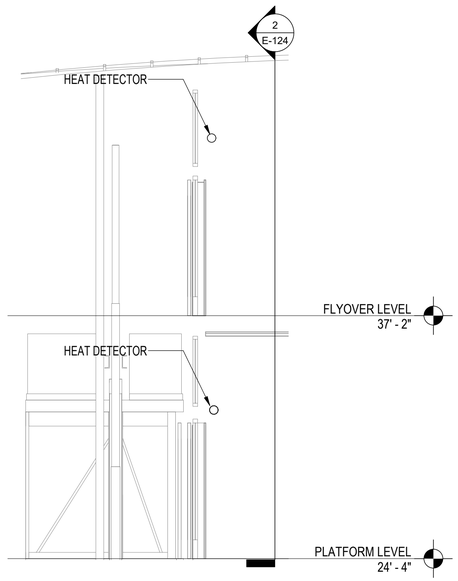

3 ELEVATOR 3 SECTION
1/4" = 1'-0"

LAKE ST. KEY PLAN:

DESIGN BY:										
DRAWN BY:										
CHECKED BY:										
APPROVED BY:		4	7/3/2023	ISSUED FOR BID	JM	EM	OS			
CDOT/APPROVED BY:		NO.	DATE	REVISIONS	DES.	DRW.	CHK.	DCCO	CDOT	

TRANSYSTEMS
222 SOUTH RIVERSIDE PLAZA SUITE 610
CHICAGO, ILLINOIS 60606

SKIDMORE, OWINGS & MERRILL LLP
224 SOUTH MICHIGAN AVENUE, SUITE 1000
CHICAGO, ILLINOIS 60604

FACET ENGINEERING
4316 NORTH ELSTON AVENUE
CHICAGO, ILLINOIS 60641

CHICAGO DEPARTMENT OF TRANSPORTATION
DIVISION OF ENGINEERING

STATE / LAKE LOOP ELEVATED STATION
200 NORTH STATE STREET, CHICAGO, IL 60601

SPEC. NO.

FLYOVER LEVEL - FIRE ALARM PLAN

DRAWING NO.
E-124

CDOT PROJECT D-1-209

DATE: 9/9/2022

REVISION NO.

NOTES:

1. SEE DRAWING E-001 FOR ELECTRICAL SYMBOL LIST.
2. SEE DRAWING E-002 FOR ELECTRICAL GENERAL NOTES AND ABBREVIATIONS.
3. SEE DRAWING E-633 FIRE ALARM RISER DIAGRAM FOR CONDUIT AND WIRING REQUIREMENTS.

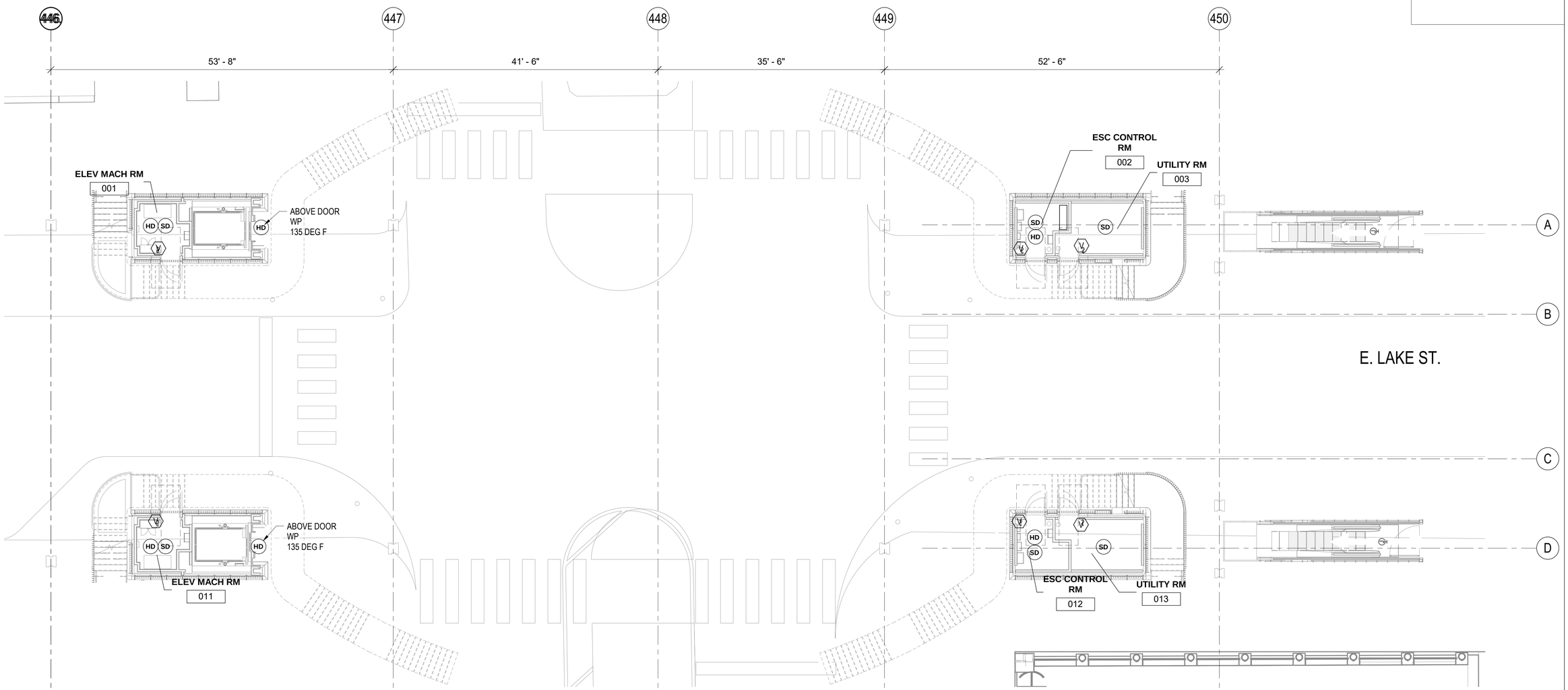

1 STREET LEVEL - FIRE ALARM PLAN

1/8" = 1'-0"

LAKE ST. KEY PLAN:

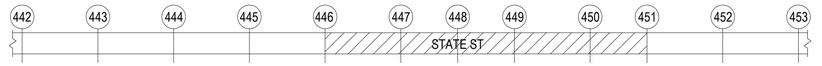

DESIGN BY:										
DRAWN BY:										
CHECKED BY:										
APPROVED BY:		4	7/3/2023	ISSUED FOR BID	EM	EM	JM			
CDOT/APPROVED BY:		NO.	DATE	REVISIONS	DES.	DRW.	CHK.	DCCO	CDOT	

TRANSYSTEMS
222 SOUTH RIVERSIDE PLAZA SUITE 610
CHICAGO, ILLINOIS 60606

SKIDMORE, OWINGS & MERRILL LLP
224 SOUTH MICHIGAN AVENUE, SUITE 1000
CHICAGO, ILLINOIS 60604

FACET ENGINEERING
4316 NORTH ELSTON AVENUE
CHICAGO, ILLINOIS 60641

CHICAGO DEPARTMENT OF TRANSPORTATION
DIVISION OF ENGINEERING

STATE / LAKE LOOP ELEVATED STATION
200 NORTH STATE STREET, CHICAGO, IL 60601

STREET LEVEL - FIRE ALARM PLAN

CDOT PROJECT D-1-209

DATE: 9/9/2022

SPEC. NO.

DRAWING NO. E-125

REVISION NO.

NOTES:

1. SEE DRAWING E-001 FOR ELECTRICAL SYMBOL LIST.
2. SEE DRAWING E-002 FOR ELECTRICAL GENERAL NOTES AND ABBREVIATIONS.
3. SEE DRAWING E-632 MONITOR AND ALARM DIAGRAM FOR CONDUIT AND WIRING REQUIREMENTS.

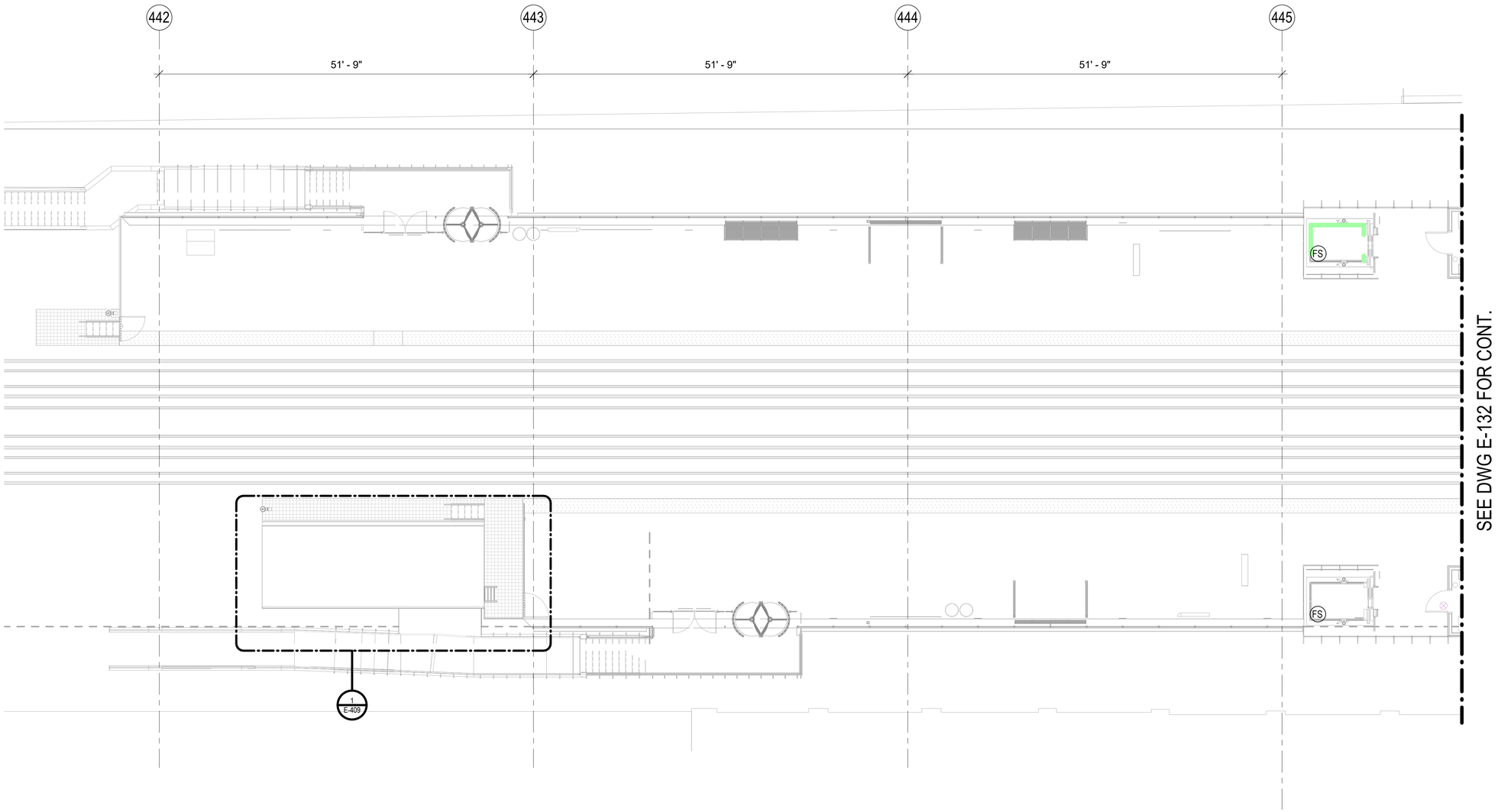

1 PLATFORM LEVEL MONITORING AND ALARM PLAN - PART 1

1/8" = 1'-0"

LAKE ST. KEY PLAN:

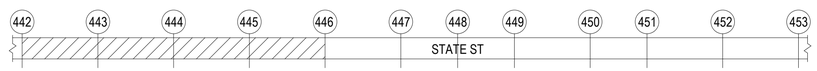

DESIGN BY:										
DRAWN BY:										
CHECKED BY:										
APPROVED BY:		4	7/3/2023	ISSUED FOR BID	JM	EM	OS			
CDOT/APPROVED BY:		NO.	DATE	REVISIONS	DES.	DRW.	CHK.	DCCO	CDOT	

TRANSYSTEMS
222 SOUTH RIVERSIDE PLAZA SUITE 610
CHICAGO, ILLINOIS 60606

SKIDMORE, OWINGS & MERRILL LLP
224 SOUTH MICHIGAN AVENUE, SUITE 1000
CHICAGO, ILLINOIS 60604

FACET ENGINEERING
4316 NORTH ELSTON AVENUE
CHICAGO, ILLINOIS 60641

CHICAGO DEPARTMENT OF TRANSPORTATION
DIVISION OF ENGINEERING

STATE / LAKE LOOP ELEVATED STATION
200 NORTH STATE STREET, CHICAGO, IL 60601

PLATFORM LEVEL - MONITORING AND ALARM PLAN - WEST

CDOT PROJECT D-1-209 | DATE: 9/9/2022

SPEC. NO.

DRAWING NO. E-131

REVISION NO.

NOTES:

1. SEE DRAWING E-001 FOR ELECTRICAL SYMBOL LIST.
2. SEE DRAWING E-002 FOR ELECTRICAL GENERAL NOTES AND ABBREVIATIONS.
3. SEE DRAWING E-632 MONITOR AND ALARM DIAGRAM FOR CONDUIT AND WIRING REQUIREMENTS.

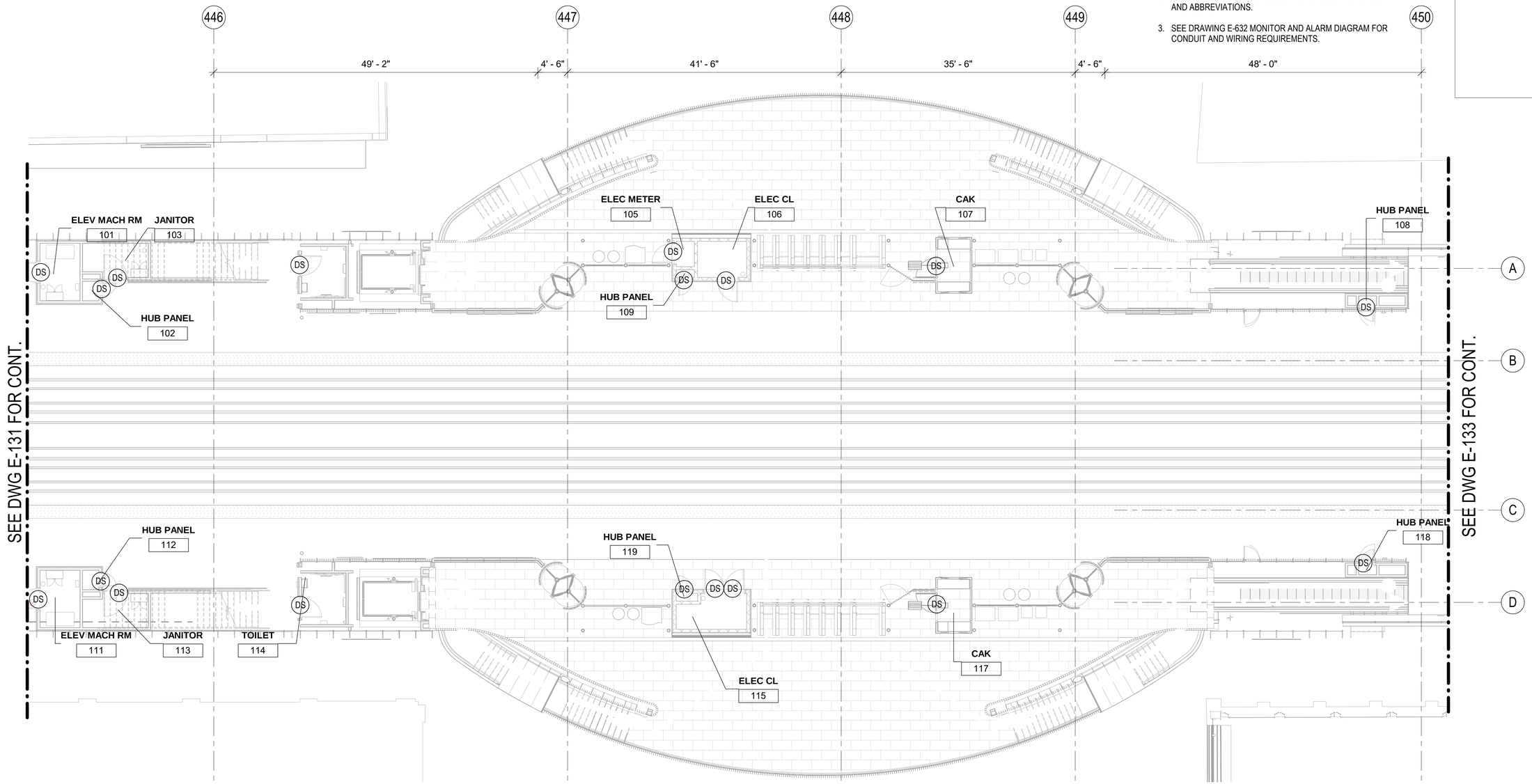

1 PLATFORM LEVEL MONITORING AND ALARM PLAN - PART 2

1/8" = 1'-0"

LAKE ST. KEY PLAN:

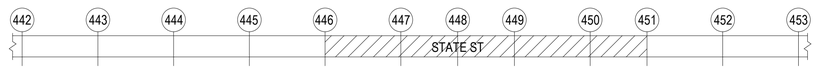

NO.	DATE	REVISIONS	DES.	DRW.	CHK.	DCCO	CDOT
4	7/3/2023	ISSUED FOR BID	JM	EM	OS		

DESIGN BY:
DRAWN BY:
CHECKED BY:
APPROVED BY:
CDOT/APPROVED BY:

TRANSYSTEMS
222 SOUTH RIVERSIDE PLAZA SUITE 610
CHICAGO, ILLINOIS 60606

SKIDMORE, OWINGS & MERRILL LLP
224 SOUTH MICHIGAN AVENUE, SUITE 1000
CHICAGO, ILLINOIS 60604

FACET ENGINEERING
DBE/MBE CERTIFIED
Performance • Respect • Initiation • Dedication • Experience
FACET ENGINEERING
4316 NORTH ELSTON AVENUE
CHICAGO, ILLINOIS 60641

CHICAGO DEPARTMENT OF TRANSPORTATION
DIVISION OF ENGINEERING

STATE / LAKE LOOP ELEVATED STATION
200 NORTH STATE STREET, CHICAGO, IL 60601

PLATFORM LEVEL - MONITORING AND ALARM PLAN - CENTER

CDOT PROJECT D-1-209

DATE: 9/9/2022

SPEC. NO.

DRAWING NO. E-132

REVISION NO.

NOTES:

1. SEE DRAWING E-001 FOR ELECTRICAL SYMBOL LIST.
2. SEE DRAWING E-002 FOR ELECTRICAL GENERAL NOTES AND ABBREVIATIONS.
3. SEE DRAWING E-632 MONITOR AND ALARM DIAGRAM FOR CONDUIT AND WIRING REQUIREMENTS.

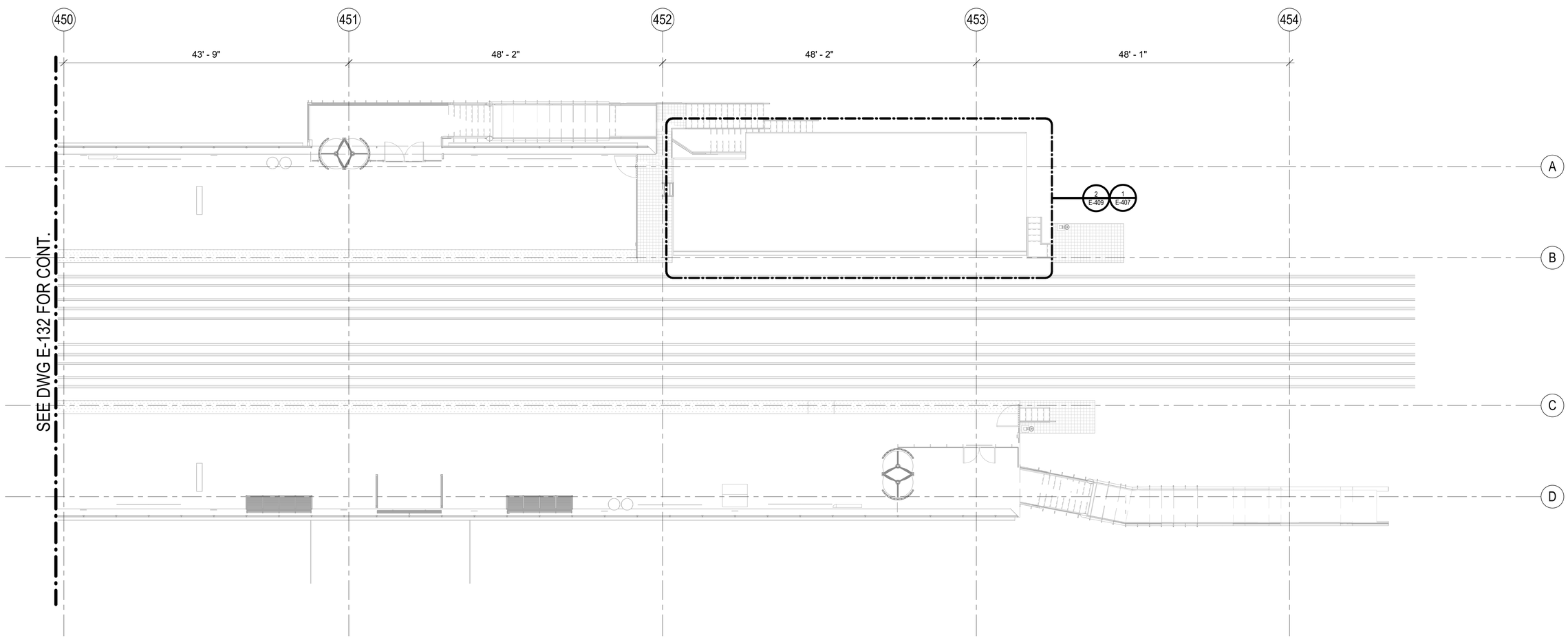

1 PLATFORM LEVEL MONITORING AND ALARM PLAN - PART 3

1/8" = 1'-0"

LAKE ST. KEY PLAN:

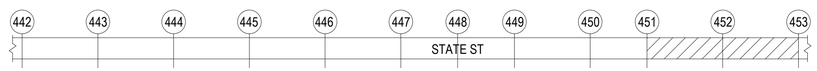

NO.	DATE	REVISIONS	DES.	DRW.	CHK.	DCCO	CDOT
4	7/3/2023	ISSUED FOR BID	JM	EM	OS		

DESIGN BY:
DRAWN BY:
CHECKED BY:
APPROVED BY:
CDOT/APPROVED BY:

TRANSYSTEMS
222 SOUTH RIVERSIDE PLAZA SUITE 610
CHICAGO, ILLINOIS 60606

SKIDMORE, OWINGS & MERRILL LLP
224 SOUTH MICHIGAN AVENUE, SUITE 1000
CHICAGO, ILLINOIS 60604

FACET ENGINEERING
4316 NORTH ELSTON AVENUE
CHICAGO, ILLINOIS 60641

CHICAGO DEPARTMENT OF TRANSPORTATION
DIVISION OF ENGINEERING

STATE / LAKE LOOP ELEVATED STATION
200 NORTH STATE STREET, CHICAGO, IL 60601

PLATFORM LEVEL - MONITORING AND ALARM PLAN - EAST

CDOT PROJECT D-1-209

DATE: 9/9/2022

SPEC. NO.

DRAWING NO. E-133

REVISION NO.

NOTES:

1. SEE DRAWING E-001 FOR ELECTRICAL SYMBOL LIST.
2. SEE DRAWING E-002 FOR ELECTRICAL GENERAL NOTES AND ABBREVIATIONS.
3. SEE DRAWING E-632 MONITOR AND ALARM DIAGRAM FOR CONDUIT AND WIRING REQUIREMENTS.

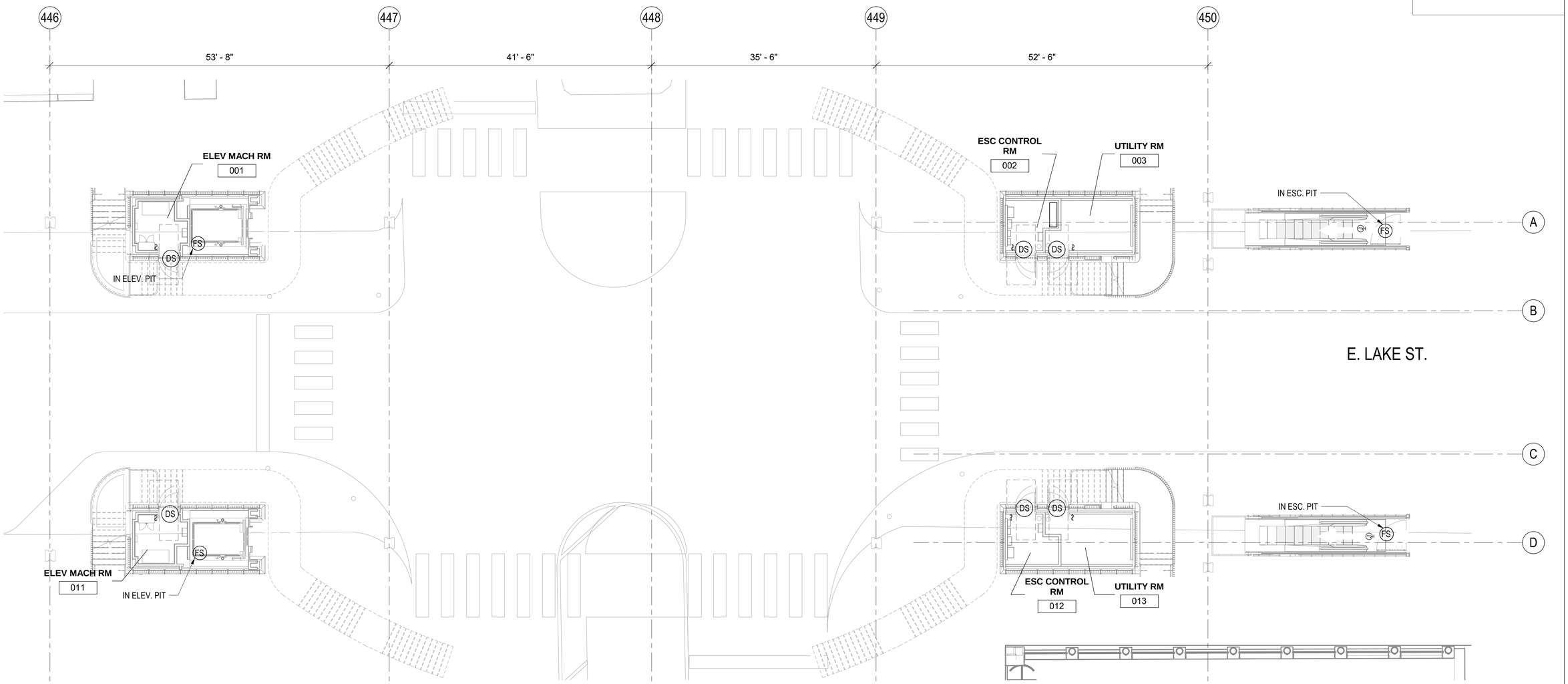

1 STREET LEVEL - MONITORING AND ALARM PLAN

1/8" = 1'-0"

LAKE ST. KEY PLAN:

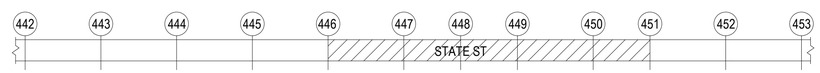

DESIGN BY:									
DRAWN BY:									
CHECKED BY:									
APPROVED BY:		4	7/3/2023	ISSUED FOR BID	EM	EM	JM		
CDOT/APPROVED BY:		NO.	DATE	REVISIONS	DES.	DRW.	CHK.	DCCO	CDOT

TRANSYSTEMS
222 SOUTH RIVERSIDE PLAZA SUITE 610
CHICAGO, ILLINOIS 60606

SKIDMORE, OWINGS & MERRILL LLP
224 SOUTH MICHIGAN AVENUE, SUITE 1000
CHICAGO, ILLINOIS 60604

FACET ENGINEERING
4316 NORTH ELSTON AVENUE
CHICAGO, ILLINOIS 60641

CHICAGO DEPARTMENT OF TRANSPORTATION
DIVISION OF ENGINEERING

STATE / LAKE LOOP ELEVATED STATION
200 NORTH STATE STREET, CHICAGO, IL 60601

STREET LEVEL - MONITORING AND ALARM PLAN

CDOT PROJECT D-1-209

DATE: 9/9/2022

SPEC. NO.

DRAWING NO. E-134

REVISION NO.

NOTES:

1. SEE DRAWING E-001 FOR ELECTRICAL SYMBOL LIST.
2. SEE DRAWING E-002 FOR ELECTRICAL GENERAL NOTES AND ABBREVIATIONS.
3. SEE DRAWING E-612 ELECTRICAL EQUIPMENT SCHEDULE FOR CONDUIT AND WIRING REQUIREMENTS.
4. SEE DRAWING E-614 THROUGH E-621 FOR PANELBOARD SCHEDULES.
5. SEE DRAWING E-611 FOR CABLE AND CONDUIT SCHEDULE.
6. FURNISH AND INSTALL EQUIPMENT DISCONNECT SWITCHES IN STRICT COMPLIANCE WITH CHICAGO ELECTRICAL CODE REQUIREMENTS. INCLUDE NAMEPLATE ON EACH DISCONNECT SWITCH WHICH STATES ID, VOLTAGE, PHASE, AMPERES AND NEMA TYPE.

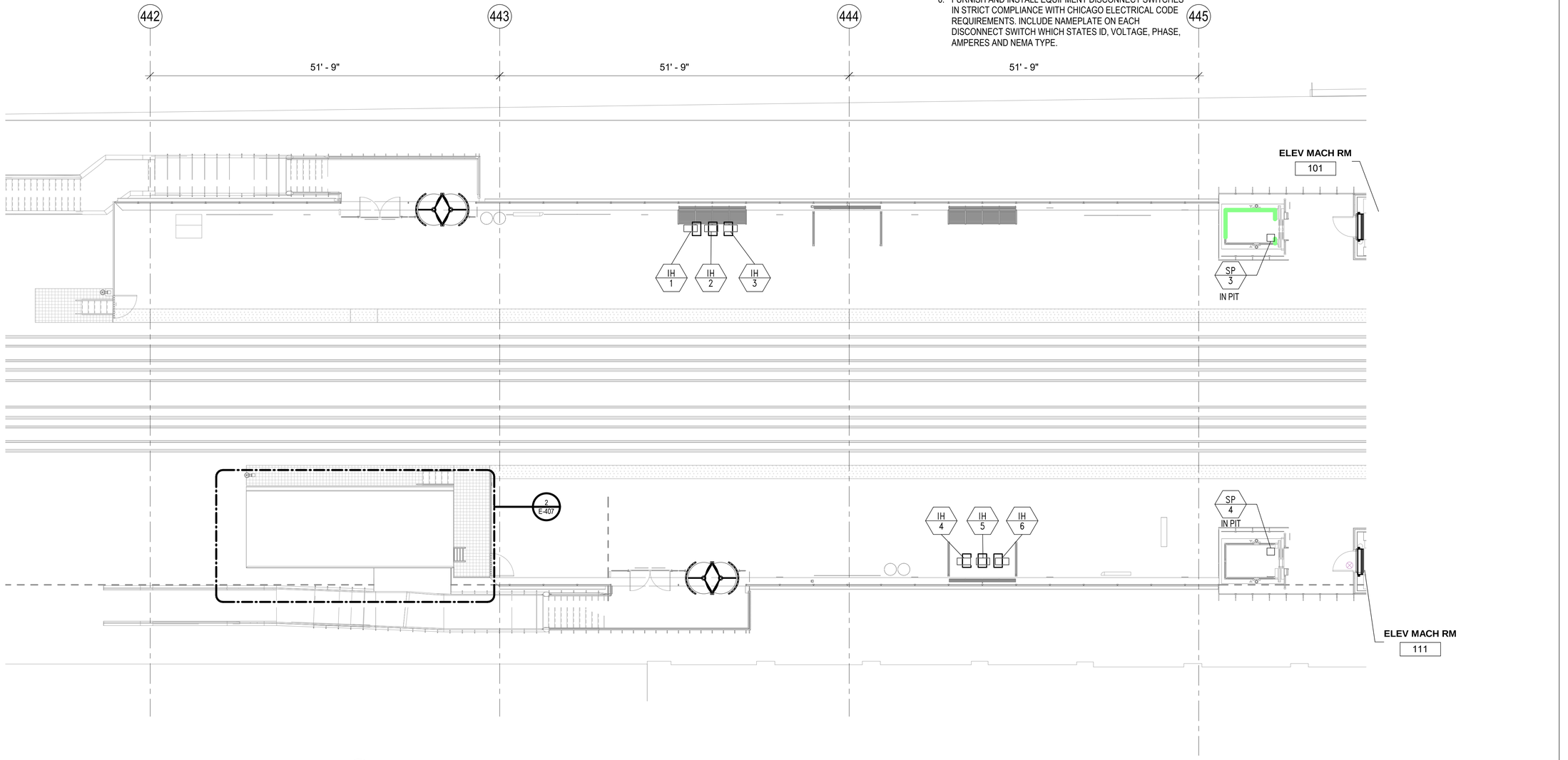

1 PLATFORM LEVEL EQUIPMENT PLAN - PART 1

1/8" = 1'-0"

LAKE ST. KEY PLAN:

NO.	DATE	REVISIONS	DES.	DRW.	CHK.	DCCO	CDOT
4	7/3/2023	ISSUED FOR BID	EM	EM	JM		

DESIGN BY:
DRAWN BY:
CHECKED BY:
APPROVED BY:
CDOT/APPROVED BY:

TRANSYSTEMS
222 SOUTH RIVERSIDE PLAZA SUITE 610
CHICAGO, ILLINOIS 60606

SKIDMORE, OWINGS & MERRILL LLP
224 SOUTH MICHIGAN AVENUE, SUITE 1000
CHICAGO, ILLINOIS 60604

FACET ENGINEERING
4316 NORTH ELSTON AVENUE
CHICAGO, ILLINOIS 60641

CHICAGO DEPARTMENT OF TRANSPORTATION
DIVISION OF ENGINEERING

STATE / LAKE LOOP ELEVATED STATION
200 NORTH STATE STREET, CHICAGO, IL 60601

PLATFORM LEVEL - EQUIPMENT PLAN - WEST

CDOT PROJECT D-1-209

DATE: 9/9/2022

SPEC. NO.

DRAWING NO. E-141

REVISION NO.

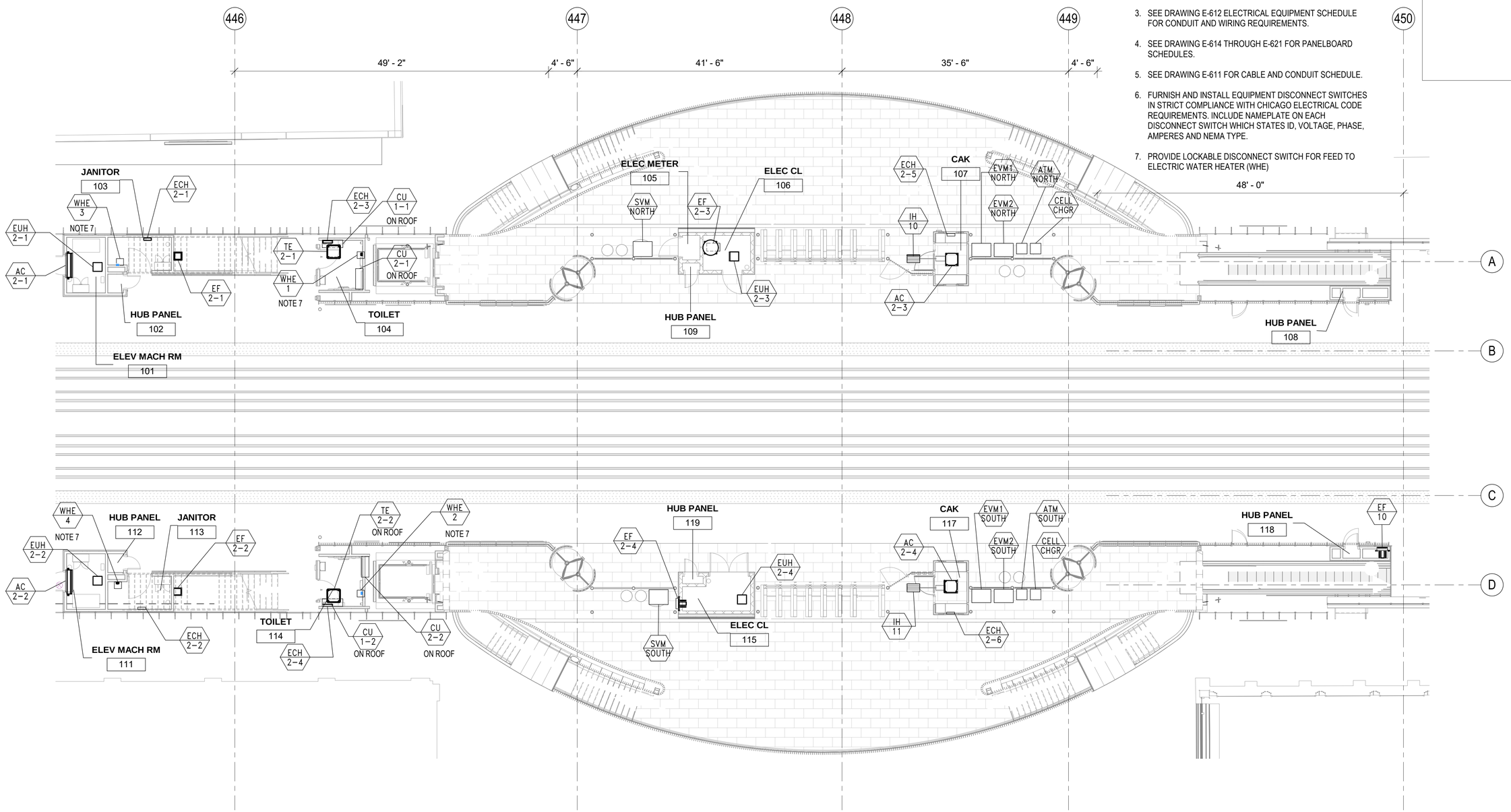

NOTES:

1. SEE DRAWING E-001 FOR ELECTRICAL SYMBOL LIST.
2. SEE DRAWING E-002 FOR ELECTRICAL GENERAL NOTES AND ABBREVIATIONS.
3. SEE DRAWING E-612 ELECTRICAL EQUIPMENT SCHEDULE FOR CONDUIT AND WIRING REQUIREMENTS.
4. SEE DRAWING E-614 THROUGH E-621 FOR PANELBOARD SCHEDULES.
5. SEE DRAWING E-611 FOR CABLE AND CONDUIT SCHEDULE.
6. FURNISH AND INSTALL EQUIPMENT DISCONNECT SWITCHES IN STRICT COMPLIANCE WITH CHICAGO ELECTRICAL CODE REQUIREMENTS. INCLUDE NAMEPLATE ON EACH DISCONNECT SWITCH WHICH STATES ID, VOLTAGE, PHASE, AMPERES AND NEMA TYPE.
7. PROVIDE LOCKABLE DISCONNECT SWITCH FOR FEED TO ELECTRIC WATER HEATER (WHE)

1 PLATFORM LEVEL EQUIPMENT PLAN - PART 2

1/8" = 1'-0"

LAKE ST. KEY PLAN:

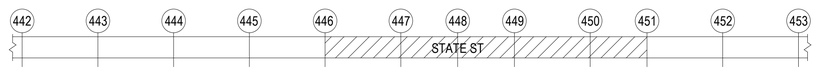

DESIGN BY:										
DRAWN BY:										
CHECKED BY:										
APPROVED BY:		4	7/3/2023	ISSUED FOR BID	EM	EM	JM			
CDOT/APPROVED BY:		NO.	DATE	REVISIONS	DES.	DRW.	CHK.	DCCO	CDOT	

TRANSYSTEMS
222 SOUTH RIVERSIDE PLAZA SUITE 610
CHICAGO, ILLINOIS 60606

SKIDMORE, OWINGS & MERRILL LLP
224 SOUTH MICHIGAN AVENUE, SUITE 1000
CHICAGO, ILLINOIS 60604

FACET ENGINEERING
DBE/MBE CERTIFIED
Performance • Respect • Initiation • Dedication • Experience
FACET ENGINEERING
4316 NORTH ELSTON AVENUE
CHICAGO, ILLINOIS 60641

CHICAGO DEPARTMENT OF TRANSPORTATION
DIVISION OF ENGINEERING

STATE / LAKE LOOP ELEVATED STATION
200 NORTH STATE STREET, CHICAGO, IL 60601

PLATFORM LEVEL - EQUIPMENT PLAN - CENTER

CDOT PROJECT D-1-209 | DATE: 9/9/2022

SPEC. NO.

DRAWING NO. E-142

REVISION NO.

NOTES:

1. SEE DRAWING E-001 FOR ELECTRICAL SYMBOL LIST.
2. SEE DRAWING E-002 FOR ELECTRICAL GENERAL NOTES AND ABBREVIATIONS.
3. SEE DRAWING E-612 ELECTRICAL EQUIPMENT SCHEDULE FOR CONDUIT AND WIRING REQUIREMENTS.
4. SEE DRAWING E-614 THROUGH E-621 FOR PANELBOARD SCHEDULES.
5. SEE DRAWING E-611 FOR CABLE AND CONDUIT SCHEDULE.
6. FURNISH AND INSTALL EQUIPMENT DISCONNECT SWITCHES IN STRICT COMPLIANCE WITH CHICAGO ELECTRICAL CODE REQUIREMENTS. INCLUDE NAMEPLATE ON EACH DISCONNECT SWITCH WHICH STATES ID, VOLTAGE, PHASE, AMPERES AND NEMA TYPE.

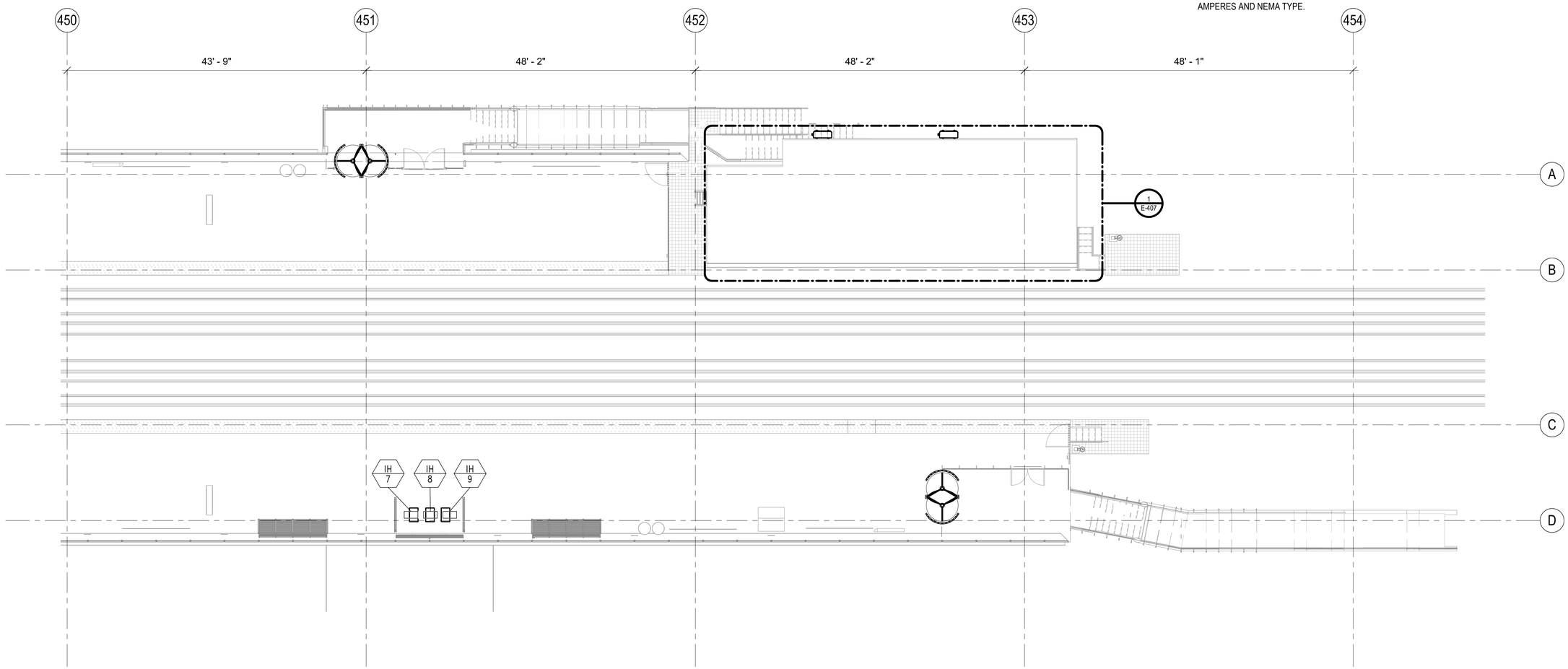

1 PLATFORM LEVEL EQUIPMENT PLAN - PART 3

1/8" = 1'-0"

LAKE ST. KEY PLAN:

DESIGN BY:									
DRAWN BY:									
CHECKED BY:									
APPROVED BY:		4	7/3/2023	ISSUED FOR BID	EM	EM	JM		
CDOT/APPROVED BY:		NO.	DATE	REVISIONS	DES.	DRW.	CHK.	DCCO	CDOT

TRANSYSTEMS
222 SOUTH RIVERSIDE PLAZA SUITE 610
CHICAGO, ILLINOIS 60606

SKIDMORE, OWINGS & MERRILL LLP
224 SOUTH MICHIGAN AVENUE, SUITE 1000
CHICAGO, ILLINOIS 60604

FACET ENGINEERING
4316 NORTH ELSTON AVENUE
CHICAGO, ILLINOIS 60641

CHICAGO DEPARTMENT OF TRANSPORTATION
DIVISION OF ENGINEERING

STATE / LAKE LOOP ELEVATED STATION
200 NORTH STATE STREET, CHICAGO, IL 60601

PLATFORM LEVEL - EQUIPMENT PLAN - EAST

CDOT PROJECT D-1-209

DATE: 9/9/2022

SPEC. NO.

DRAWING NO. E-143

REVISION NO.

NOTES:

1. SEE DRAWING E-001 FOR ELECTRICAL SYMBOL LIST.
2. SEE DRAWING E-002 FOR ELECTRICAL GENERAL NOTES AND ABBREVIATIONS.
3. SEE DRAWING E-612 ELECTRICAL EQUIPMENT SCHEDULE FOR CONDUIT AND WIRING REQUIREMENTS.
4. SEE DRAWING E-614 THROUGH E-621 FOR PANELBOARD SCHEDULES.
5. SEE DRAWING E-611 FOR CABLE AND CONDUIT SCHEDULE.
6. FURNISH AND INSTALL EQUIPMENT DISCONNECT SWITCHES IN STRICT COMPLIANCE WITH CHICAGO ELECTRICAL CODE REQUIREMENTS. INCLUDE NAMEPLATE ON EACH DISCONNECT SWITCH WHICH STATES ID, VOLTAGE, PHASE, AMPERES AND NEMA TYPE.

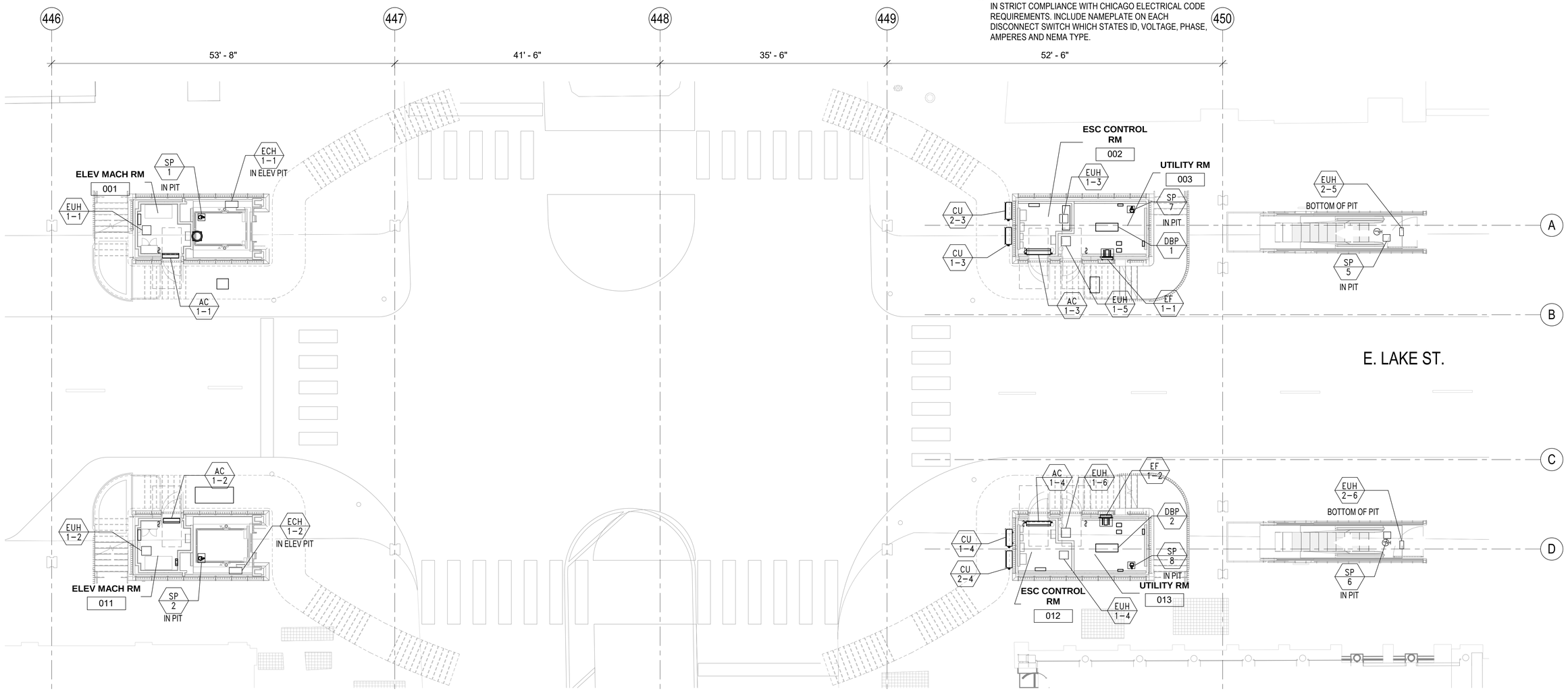

1 STREET LEVEL - EQUIPMENT PLAN

1/8" = 1'-0"

LAKE ST. KEY PLAN:

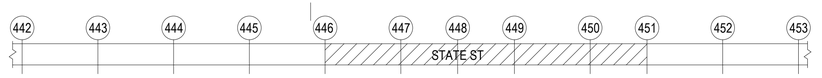

DESIGN BY:										
DRAWN BY:										
CHECKED BY:										
APPROVED BY:		4	7/3/2023	ISSUED FOR BID	EM	EM	JM			
CDOT/APPROVED BY:		NO.	DATE	REVISIONS	DES.	DRW.	CHK.	DCCO	CDOT	

TRANSYSTEMS
222 SOUTH RIVERSIDE PLAZA SUITE 610
CHICAGO, ILLINOIS 60606

SKIDMORE, OWINGS & MERRILL LLP
224 SOUTH MICHIGAN AVENUE, SUITE 1000
CHICAGO, ILLINOIS 60604

FACET ENGINEERING
4316 NORTH ELSTON AVENUE
CHICAGO, ILLINOIS 60641

CHICAGO DEPARTMENT OF TRANSPORTATION
DIVISION OF ENGINEERING

STATE / LAKE LOOP ELEVATED STATION
200 NORTH STATE STREET, CHICAGO, IL 60601

STREET LEVEL - EQUIPMENT PLAN

CDOT PROJECT D-1-209

DATE: 9/9/2022

SPEC. NO.

DRAWING NO. E-144

REVISION NO.

GENERAL STREET LIGHTING NOTES:

1. ALL STREET LIGHTING WORK FOR THIS CONTRACT SHALL BE IN ACCORDANCE WITH THE NATIONAL ELECTRICAL CODE (NEC), CITY OF CHICAGO DIVISION OF ELECTRICAL OPERATIONS STANDARDS (DEO), CHICAGO ELECTRICAL CODE, LATEST IDOT STANDARD SPECIFICATIONS, AND NEMA.

2. THE CONTRACTOR SHALL PREPARE A PRELIMINARY SCHEDULE WHEN THE CONTRACT COMMENCES WHICH ESTABLISHES THE PROJECT MILESTONE DATES. THIS SCHEDULE SHALL BE APPROVED BY THE CONTRACTOR AND RESIDENT ENGINEER, THEN FORWARDED IN WRITING TO THE CITY OF CHICAGO, DIVISION OF ELECTRICAL OPERATIONS (DEO), AND COMED. SUBSEQUENT UPDATING OF THE SCHEDULE MUST BE FORWARDED TO THE ABOVE LISTED ENTITIES AS CHANGES OCCUR IN THE DATES, AT LEAST FIVE (5) WORKING DAYS BEFORE THE WORK CONTINUES.

3. THE CONTRACTOR SHALL HANDLE COORDINATION OF ALL PROPOSED ELECTRICAL CONNECTIONS, LIGHTING UNITS, CONTROL EQUIPMENT, AND/OR ANY OTHER WORK DEEMED NECESSARY BY THE AUTHORITY TO ASSURE THAT ANY FUTURE OR CONCURRENT CONTRACT WORK PROCEEDS AS SCHEDULED AND WITHOUT DELAY. THIS COORDINATION WILL BE INCLUDED IN THE COST OF THE CONTRACT.

4. THE CITY OF CHICAGO OFFICE OF PUBLIC SAFETY ADMINISTRATION (OPSA) WILL PERFORM ANY NECESSARY WORK ASSOCIATED WITH THE INSTALLATION AND REMOVAL OF ALL ALARM SYSTEM CABLE. THE CONTRACTOR WILL BE RESPONSIBLE FOR NOTIFYING THE OPSA PRIOR TO THE COMMENCEMENT OF ALL WORK AND MUST COORDINATE ALL WORK ACTIVITIES SO AS NOT TO INTERFERE WITH THE WORK TO BE PERFORMED BY THE OPSA. REQUIRED COORDINATION OF WORK WITH THE OPSA WILL BE CONSIDERED INCLUDED IN THE COST OF THIS CONTRACT AND NO ADDITIONAL COMPENSATION OR EXTENSIONS OF TIME WILL BE GRANTED ARISING FROM OR ATTRIBUTED TO SAID COORDINATION. 911, OEMC, POLES, OYS CAMERAS AND OTHER OPSA EQUIPMENT MAY NOT BE REMOVED UNTIL OPSA HAS RELOCATED ALL ALARM SYSTEM CABLE, CAMERAS OR ANY OTHER RELATED EQUIPMENT FROM THE POLES.

5. THE CONTRACTOR SHALL COORDINATE ALL WORK AND MATERIALS WITH SPECIAL ATTENTION TO ALL OTHER CONSTRUCTION CONTRACTS. THIS WORK WILL BE INCLUDED IN THE COST OF THE CONTRACT AND SEPARATE PAYMENT WILL NOT BE MADE.

6. THE CONTRACTOR SHALL REFER TO THE CIVIL DRAWINGS FOR LOCATIONS OF EXISTING EQUIPMENT AND UTILITIES NOT SPECIFICALLY SHOWN ON ELECTRICAL DRAWINGS.

7. THE CONTRACTOR SHALL COORDINATE ALL WORK WITH THE GENERAL CIVIL, SEWER AND GENERAL TRAFFIC CONTROL NOTES ON DRAWINGS AND/OR SPECIFICATIONS.

8. THE CONTRACTOR SHALL COORDINATE WITH ROADWAY, BRIDGE, SEWER, PIPING, AND TRAFFIC CONTROL CONTRACTORS FOR STAGING AND SEQUENCE OF INSTALLATIONS, BACKFILL, AND/OR CONSTRUCTION SCHEDULING.

9. ALL CITY OF CHICAGO LIGHTING EQUIPMENT REMOVED AS PART OF THIS CONTRACT WILL REMAIN THE PROPERTY OF THE CITY AND SHALL BE DELIVERED TO CITY'S STORAGE FACILITY LOCATED WITHIN THE CITY LIMITS IN ACCORDANCE WITH THE CONTRACT SPECIFICATION, UNLESS NOTED OTHERWISE.

10. RECORD DRAWINGS SHOWING EXISTING STREET LIGHTING INSTALLATIONS AND CABINET LOCATIONS, ARE AVAILABLE FOR THE CONTRACTOR'S INFORMATION AT THE OFFICES OF CITY OF CHICAGO DEPARTMENT OF TRANSPORTATION.

11. ALL EXISTING AREAS THAT ARE DAMAGED AS A PART OF THIS WORK, INCLUDING BUT NOT LIMITED TO FENCING, CURBS AND GUTTERS, AND SIDEWALKS, SHALL BE RESTORED TO THE SATISFACTION OF THE AUTHORITY. THIS WORK WILL BE INCLUDED IN THE COST OF THIS CONTRACT AND SEPARATE PAYMENT WILL NOT BE MADE.

12. ALL NEW ELECTRICAL EQUIPMENT INSTALLED UNDER THIS CONTRACT SHALL BE DONE IN SUCH A MANNER AS NOT TO DAMAGE THE EXISTING LANDSCAPE (TREES, BUSHES, ETC.) DURING THE PROGRESSION OF WORK. IF THE CONTRACTOR HAS A CONFLICT WITH THE EXISTING LANDSCAPE HE/SHE SHALL STOP THE WORK, IMMEDIATELY NOTIFY THE RESIDENT ENGINEER, AND WAIT FOR RESOLUTION.

13. THE EXISTING ROADWAY LIGHTING SYSTEM WITHIN THE CONSTRUCTION LIMITS OF THE PROJECT SHALL REMAIN IN OPERATION FOR THE DURATION OF THIS PROJECT UNTIL SUCH TIME THAT THE NEW LIGHTING SYSTEM HAS BEEN INSTALLED, ENERGIZED, TESTED, ADJUSTED, AND ACCEPTED BY THE AUTHORITY. THE COST OF THIS WORK WILL BE INCLUDED AS PART OF THE CONTRACT AND SEPARATE PAYMENT WILL NOT BE MADE.

14. AT THE COMMENCEMENT OF CONTRACTOR ACTIVITIES, ELECTRICAL OR OTHERWISE, THE CONTRACTOR WILL BE RESPONSIBLE FOR THE PROPER OPERATION AND MAINTENANCE OF ALL EXISTING LIGHTING AND POWER SYSTEMS IN ACCORDANCE WITH THE STANDARD SPECIFICATIONS, UNLESS OTHERWISE DIRECTED BY THE AUTHORITY.

15. ALL PROPOSED DUCT BANKS, CONDUITS, JUNCTION BOXES, AND APPURTENANCES ARE ILLUSTRATED DIAGRAMMATICALLY. THE ACTUAL LOCATIONS IN THE FIELD SHALL BE APPROVED BY THE AUTHORITY.

16. DE-ENERGIZING OF EXISTING LIGHTING UNITS WILL BE INCLUDED IN THE COST OF THE CONTRACT WORK. SEPARATE PAYMENT WILL NOT BE MADE.

17. DISCONNECTION AND REMOVAL OF EXISTING BEAM CLAMPS, HANGERS, BRACKETS, CONDUITS, WIRES IN CONDUIT, AND AERIAL CABLES ATTACHED TO STRUCTURE AND TO EXISTING LIGHTING UNITS WILL BE INCLUDED IN THE COST OF THE CONTRACT, SEPARATE PAYMENT WILL NOT BE MADE.

18. REMOVAL OF EXISTING ELECTRICAL CABLES FEEDING EACH OF THE EXISTING LIGHTING/SIGNAL UNITS WILL BE INCLUDE IN THE COST OF THE CONTRACT AND SEPARATE PAYMENT WILL NOT BE MADE.

19. EXISTING UNDERGROUND RACEWAYS BETWEEN EXISTING LIGHTING UNITS OR EXISTING EQUIPMENT SHALL BE REMOVED, UNLESS NOTED OTHERWISE.

20. THE CONTRACTOR SHALL COORDINATE WITH THE AUTHORITY AND ALL CONCERNED ORGANIZATIONS AS TO POSSIBLE REMOVAL, REPLACEMENT, DISPLACEMENT, AND/OR METHOD OF AVOIDANCE OF EXISTING OBSTRUCTIONS OR PROPOSED CONSTRUCTION ELEMENTS REQUIRED BY NEW INSTALLATIONS.

21. THE CONTRACTOR SHALL PROVIDE AND INSTALL ANY ADDITIONAL TEMPORARY ELECTRICAL EQUIPMENT CONNECTIONS AS NECESSARY TO MAINTAIN EXISTING LIGHTING CONTINUITY AS THE PROPOSED WORK FOR INSTALLATION AND REMOVAL OF EXISTING LIGHTING EQUIPMENT PROGRESSES. THE COST OF THIS WORK WILL BE INCLUDED IN THE CONTRACT.

22. WHERE THE CONTRACTOR'S EXCAVATION MEETS AN OBSTRUCTION OR EXISTING FOUNDATION. THE CONTRACTOR MUST NOTIFY THE COMMISSIONER FOR DIRECTION IN WRITING PRIOR TO FURTHER EXCAVATION. THE CONTRACTOR SHALL RESTORE ANY DAMAGE TO EXISTING SYSTEMS OR UTILITIES AND REMOVE EXISTING OBSTRUCTIONS AND FOUNDATIONS TO THE SATISFACTION OF THE COMMISSIONER. THE COST OF THIS WORK WILL BE INCLUDED IN THE CONTRACT.

23. THE CONTRACTOR SHALL REFER TO ALL CITY OF CHICAGO ATLAS DRAWINGS P22 AND Q22, CTA DRAWINGS, COMED DRAWINGS, CDWM DRAWINGS, MWRD DRAWINGS, AND AT&T DRAWINGS FOR POSSIBLE UNDERGROUND WIRES, CABLES, CONDUITS, DUCT RUNS, EQUIPMENT, UTILITIES, OR DEVICES.

24. THE CONTRACTOR SHALL BE RESPONSIBLE FOR MARKING THE PROPOSED LOCATION OF ALL CITY LIGHT POLES, LUMINAIRES, CABINETS, JUNCTION BOXES, CONDUIT ROUTES, AND OTHER EQUIPMENT AND ITEMS FOR A CONTRACTOR REQUESTED PRE-CONSTRUCTION INSPECTION BY THE COMMISSIONER, AND THE CITY OF CHICAGO DIVISION OF ELECTRICAL OPERATIONS. THE EXACT LOCATIONS OF ALL ITEMS SHALL BE APPROVED BY THE CITY OF CHICAGO DIVISION OF ELECTRICAL OPERATIONS PRIOR TO STARTING WORK. ANY WORK INSTALLED WITHOUT LOCATION APPROVAL FROM THE CITY OF CHICAGO DIVISION OF ELECTRICAL OPERATIONS WILL BE SUBJECTED TO CORRECTIVE ACTION AT THE CONTRACTOR'S EXPENSE.

25. THE CONTRACTOR SHALL IDENTIFY EACH ELECTRIC CABLE ASSEMBLY FOR STREET LIGHTING. CABLES SHALL BE TAGGED IN ALL HANDHOLES, MANHOLES, CONTROLLER CABINETS, AND LIGHT POLE BASES.

26. CONDUIT STUBOUTS IN EQUIPMENT FOUNDATIONS WILL BE INCLUDED IN THE COST OF THE CONTRACT AND SEPARATE PAYMENT WILL NOT BE MADE.

27. THE ELECTRIC CABLE PHASE AND NEUTRAL CONDUCTORS SHALL BE RUN CONTINUOUS WITHOUT ANY UNDERGROUND SPLICES, JUNCTION BOX SPLICES, PULL BOX SPLICES, HANDHOLE SPLICES, OR MANHOLE SPLICES. SPLICES OF ELECTRIC CABLE PHASE AND NEUTRAL CONDUCTORS WILL BE PERMITTED ONLY IN THE BASE OF THE PROPOSED LIGHT POLES AND CONTROLLERS UNLESS NOTED OTHERWISE. THE COST OF THIS WORK WILL BE INCLUDED IN THE CONTRACT AND SEPARATE PAYMENT WILL NOT BE MADE.

28. THE CONTRACTOR SHALL DETERMINE WHICH CABLES ARE TO BE ROUTED IN EACH CELL WHERE MULTIPLE EMBEDDED CONDUITS ARE INDICATED. CONDUCTORS DEDICATED TO A CIRCUIT SHALL NOT BE SEPARATED. DETERMINATION OF WHICH FEEDER IS TO BE PULLED THROUGH A SPECIFIC CELL SHOULD BE BASED ON SIMPLICITY OF CABLE PULL, LEAST AMOUNT OF CROSS-OVERS IN MANHOLES OR HANDHOLES, AND FUTURE CABLE REPLACEMENT REQUIRED.

29. WHERE DUCT RUN OR EMBEDDED CONDUIT INSTALLATIONS MUST DEVIATE FROM THAT SHOWN ON DRAWINGS AND DEVIATIONS INCREASE DUCT LENGTH OR ADD BENDS BETWEEN MANHOLES/HANDHOLES OR DEVICES, THE CONTRACTOR SHALL NOTIFY THE AUTHORITY AND PRODUCE EVIDENCE THAT CABLES CAN BE PULLED THROUGH THE EXISTING OR PROPOSED DUCT WITHOUT EXCEEDING MAXIMUM ALLOWABLE CABLE PULLING TENSION.

30. THE CONTRACTOR SHALL SCHEDULE A FINAL ACCEPTANCE INSPECTION WITH THE AUTHORITY AND THE COMMISSIONER, THE CITY OF CHICAGO DIVISION OF ELECTRICAL OPERATIONS, UPON COMPLETION OF ALL PROPOSED STREET LIGHTING WORK. UPON FINAL ACCEPTANCE BY THE COMMISSIONER, THE DEO, AND THE COMMISSIONER, THE CONTRACTOR SHALL TRANSFER ALL STREET LIGHTING, AND POWER DISTRIBUTION INSTALLATIONS TO THE CITY DEO FOR MAINTENANCE PURPOSES.

31. ALL EMPTY CONDUIT FOR FUTURE USE SHALL HAVE A PULL STRING OR CABLE INSTALLED TO ASSIST IN FUTURE CABLING.

DESIGN BY:										
DRAWN BY:										
CHECKED BY:										
APPROVED BY:		4	7/3/2023	ISSUED FOR BID	JM	EM	JM			
CDOT/APPROVED BY:		NO.	DATE	REVISIONS	DES.	DRW.	CHK.	DCCO	CDOT	

TRANSYSTEMS
222 SOUTH RIVERSIDE PLAZA SUITE 610
CHICAGO, ILLINOIS 60606

SKIDMORE, OWINGS & MERRILL LLP
224 SOUTH MICHIGAN AVENUE, SUITE 1000
CHICAGO, ILLINOIS 60604

FACET ENGINEERING
4316 NORTH ELSTON AVENUE
CHICAGO, ILLINOIS 60641

CHICAGO DEPARTMENT OF TRANSPORTATION
DIVISION OF ENGINEERING

STATE / LAKE LOOP ELEVATED STATION
200 NORTH STATE STREET, CHICAGO, IL 60601

SPEC. NO.

ELECTRICAL STREET LIGHTING GENERAL NOTES

DRAWING NO.
E-180

CDOT PROJECT D-1-209

DATE: 9/9/2022

REVISION NO.

PROPOSED	PRESENT	
		SIGNAL, TRAFFIC 3 SECTION 1–WAY ADJUSTABLE, 12" OR AS NOTED
		SIGNAL, TRAFFIC 3 SECTION 2–WAY ADJUSTABLE, 12" OR AS NOTED
*	*	SIGNAL OPTICALLY PROGRAMMED
DW	DW	SIGNAL, PEDESTRIAN, COUNTDOWN
DW	DW	SIGNAL, PEDESTRIAN, DON'T WALK/WALK
		SIGNAL FACE ARROW, 12" COLOR AS NOTED
		SIGNAL FACE, 1 SECTION YELLOW/GREEN ARROW DUAL INDICATION
		PUSH BUTTON, PEDESTRIAN
		SIGN,ILLUMINATED, WITH MESSAGE OR SYMBOL AS INDICATED
		MAST ARM, MONOTUBE, STEEL. SIZE AS INDICATED (SEE DWG. #870)
		MAST ARM, TRUSS, ALUMINUM. SIZE AS INDICATED
		CONTROLLER, TRAFFIC SIGNAL. PEDESTAL OR BASE MOUNTED AS INDICATED
		CONTROLLER, STREET LIGHTING. PEDESTAL OR BASE MOUNTED. (DWG. 876 or 880)
		CONTROLLER,STREET LIGHTING. POLE MOUNTED (DWG. #11940)
		POLE, WOOD. COMMONWEALTH EDISON COMPANY, SERVICE
		POLE, CITY STEEL, ANCHOR BASE, 34'6",7 GA. 10" DI A. AND 15"B.C. 24"X7' FND. W/1 ¼" ANCHOR RODS DRG. #818.
		POLE, CITY STEEL, ANCHOR BASE, 34'–6", 3 GA. 10" DIA. AND 15" B.C. 24"X9' FND. W/1 ¼" ANCHOR RODS DRG. #818 (16',20'or 26'M.A.)
		POLE, CITY STEEL, ANCHOR BASE, 34"–6", 3GA., 11" DIA. AND 17 ¼" B.C. 30"X9' FND. W/1 ¼" ANCHOR RODS DRG. #816. (30' M.A.)
		POLE, CITY STEEL, ANCHOR BASE 34'–6", 3 GA. 12 ½" DIA. AND 16 ½"B.C. 30"X11' FND. W/1 ½" ANCHOR RODS DRG.#817. (35',40'or 44' M.A.)
		POLE, CITY STEEL, ANCHOR BASE, 32'–6", 3 GA. 10" DIA., WITH 3 GA. BAL. HSG. BASE AND 17 ¼" B. C. ON 30"X9' FND. W/ 11/4" ANCHOR RODS DRG. #816.
		POLE, CITY STEEL, ANCHOR BASE, 20',27'–6",29'–6", 7 GA. WITH STEEL BAL. HSG. BASE AND FND. W/10" D. B.C. AND 1" ANCHOR RODS DRG. #716.
		POLE,CITY STEEL, ANCHOR BASE, 20',27'–6",29'–6", 3 GA., WITH STEEL BAL. HSG. BASE AND FND. W/10" D. B.C. AND 1" ANCHOR RODS DWG.#719.
		POLE, CITY STEEL, ANCHOR BASE, 20',27'–6", 29'–6" 7 GA., AND ALUMINUM RESIDENTIAL DAVIT,AND FND. WITH 10" B.C. AND 1" ANCHOR RODSDWG#565 (CONCRETE) OR DWG.#936 (HELIX).
		POLE, CITY STEEL, ANCHOR BASE, 20',27'–6",29'–6" 3 GA.,AND FND. WITH 10" B.C. AND 1" ANCHOR RODS DWG. #565 (CONCRETE) OR DWG.#936 (HELIX).
		POLE , CITY STEEL, ANCHOR BASE, 32'–6", 7 GA., AND FND. WITH 11½" B.C. AND 1" ANCHOR RODS DWG. #753.
		POLE, CITY STEEL, ANCHR BASE, 32'–6", 3 GA., AND FND. WITH 11½" B.C. AND 1" ANCHOR RODS DWG. #753.
		POLE, CITY STEEL, ANCHOR BASE, 32'–6" 7 GA., ALUM. BHB AND FND. WITH 15" B.C.–24"X7' WITH 1" ANCHOR RODS DRG. #691.
		POLE, CITY STEEL, ANCHOR BASE, 32'–6", 3 GA., ALUM. BHB AND FND. WITH 15" B.C. 24"X 7' WITH 1" ANCHOR RODS DWG. #691.
		POLE, CITY ALUMINUM, WITH ROUND BAL. HSG. BASE, 25', 28', or 30' ON FND.WITH 14" B.C., ACQUIRED FROM CHICAGO PARK DISTRICT.
		POLE, CITY STEEL, EMBEDDED, 4"X 9"X 35' 7 GA., TAPERED TUBULAR. (DWG. #658)
		POLE, CITY STEEL, EMBEDDED, 4"X 9"X 35' 3 GA., TAPERED TUBULAR. (DWG. #658)
		POLE, CITY STEEL, EMBEDDED. (ACQUIRED FROM CTA)
		COLUMN,ELEVATED STRUCTURE
		POLE, WOOD. (SIZE AS NOTED)
		POLE, FOUNDATION WITH ELBOWS AS INDICATED.(SIZE AS NOTED)
		POLE, ORNAMENTAL OR OTHER, AS INDICATED ON THE PLANS
		RESIDENTIAL STREET LIGHTING CONTROLLER

PROPOSED	PRESENT	
		MANHOLE, 3'X4'X4' 24" F & C (DWG.#730) (A) 30" F & C (DWG#729) (B)
		MANHOLE, 4'X6'X6' 24" F & C (DWG.#732) (C) 30" F & C (DWG#733) (D)
		HANDHOLE, HEAVY DUTY, 36" I.D. (DWG.#866) 24" F & C (E). (DWG#871) 30" F & C (F)
		HANDHOLE, CIRCULAR WITH 24"FRAME & COVER,30"I.D. (#867) (G)
		FOUNDATION, CONTROLLER OR PEDESTAL, 13" B.C.,20"X5' (DWG. #709)
		FOUNDATION, TRAFFIC CONTROLLER DWG. #854. F.A. TERMINAL FND. DWG. #11972
P	P	FOUNDATION, TRAFFIC TYPE "P", BASE MOUNT. (DWG. #888)
		FOUNDATION,CONTROLLER STREET LIGHT ,SPECIAL, 100A & 200A. (DWG.#876 & # 880)
		FOUNDATION, TRANSCLOSURE; TRANSCLOSURE HOUSING. (DWG.# 583 & #891)
		CONTROLLER,UNDERPASS LIGHTING 120V. & 240V. (DWG. #860 & #861)
	E	MANHOLE, UTILITY, E=COMMONWEALTH EDISON; T=ILL.BELL TEL.; G=PEOPLES GAS; W=CITY WATER; P=CHGO PARK DISTRICT; CTA=C.T.A; S= SEWER
		JUNCTION BOX, IN PAVEMENT (DWG. #815)
		DETECTOR LOOP IN PAVEMENT
2D	2D	CONDUIT or P.V.C., NUMBER,SIZE & TYPE. (AS NOTED)
		CONDUIT or P.V.C. ENCASED IN CONCRETE. (SECTION or NUMBER OF CONDUIT INDICATED
		LUMINAIRE, H.P.S.V. 400W LAMP, 240V, SEMI–CUTOFF
		LUMINAIRE, H.P.S.V. 400W LAMP, 240V, CUTOFF
		LUMINAIRE, H.P.S.V. 310W LAMP, 240V
		LUMINAIRE, H.P.S.V. 310W LAMP 240V, CUTOFF
		LUMINAIRE, H.P.S.V. 150W LAMP, 240V
		LUMINAIRE, H.P.S.V. 150W LAMP, 120V
		LUMINAIRE, H.P.S.V. 250W LAMP, 120V, (ALLEY LIGHT)
		LUMINAIRE, H.P.S.V. 250W LAMP, 120V
		LUMINAIRE, H.P.S.V. 400W LAMP, 240V, (FLOOD LIGHT)
T	T	TERMINAL, CABINET F.A. & P.C.
F	F	FIRE ALARM BOX, MOUNTED
F	F	FIRE ALARM BOX, POLE MOUNTED
PR.	PR	CABLE, TRAFFIC SIGNAL, COMMUNICATION, 1–PAIR #14 SHIELDED, IN CONDUIT
2	2	CABLE, TRAFFIC SIGNAL POWER SUPPLY, 2/C– #4, 600 V. EPR. IN CONDUIT
III	III	CABLE, TRAFFIC SIGNAL POWER SUPPLY, 2 1/C–#2 or #1/0 600V. EPR IN CONDUIT
II	II	CABLE, TRAFFIC SIGNAL POWER SUPPLY, 2/C–#10 or #6, 600V NSRI, IN CONDUIT
VII	VII	CABLE, TRAFFIC SIGNAL, 7/C–#12 or #14, 600V, EPR IN CONDUIT
X	X	CABLE, TRAFFIC SIGNAL, 10/C–#12 600V. EPR IN CONDUIT
	XIV	CABLE, TRAFFIC SIGNAL, 14/C–#14, 600V. EPR IN CONDUIT
XIX	XIX	CABLE, TRAFFIC SIGNAL, 19/C–#12 600V, EPR IN CONDUIT
2N	2N	CABLE, STREET LIGHT, 2 1/C–#6, 600V. RINS IN PARKWAY
2NC	2NC	CABLE, STREET LIGHT, 2 1/C–#6, 600V. RINS IN CONDUIT
3TC	3TC	CABLE, STREET LIGHT, 2 1/C–#6 EPRN 600V. & 1 1/C–#8 GREEN, TRIPLEXED,IN CONDUIT
3NC	3NC	CABLE, STREET LIGHT, 3 1/C–#1/0, or #2/0, or #4, 600V. EPR IN CONDUIT
2W	2W	WIRE, STREET LIGHT, 2 1/C–#6, HDNS. AERIAL
3W	3W	WIRE, STREET LIGHT, 2 1/C–#6 & 1 1/C #8, HDNS. AERIAL
III	III	CABLE, STREET LIGHT AERIAL, 3 1/C–#4 or #2 SELF SUPPORTING, 600V EPR
W FA	W FA	WIRE, F.A. & P.C. AERIAL, 1/C–#10, NUMERAL DENOTES QUANTITY
PR	PR	CABLE, F.A. & P.C. AERIAL, W/ MESSENGER #19–(NUMBER OF PAIRS AS INDICATED)
6 PR	6 PR	CABLE, F.A. & P.C. AERIAL, SELF SUPPORTING, #19–(NUMBER OF PAIRS AS INDICATED)
37 PR.	37 PR	CABLE, F.A. & P.C., IN CONDUIT, #19–(NUMBER OF PAIRS AS INDICATED)
		DOWNLIGHT ASSEMBLY. (DWG. #850)
		LIGHT, TRAFFIC SAFETY ISLAND
		FLASHING BEACON & DOWNLIGHT

C.M.H. LUMINAIRES

PROPOSED	PRESENT	
		LUMINAIRE, C.M.H. 315W LAMP, 240V
		LUMINAIRE, C.M.H. 315W LAMP, 240V, (FLOOD)
		LUMINAIRE, C.M.H. 210W LAMP, 240V
		LUMINAIRE, C.M.H. 140W LAMP, 240V
		LUMINAIRE, C.M.H. 140W LAMP, 120V, (ALLEY)
		LUMINAIRE, C.M.H. 90W LAMP, 240V
		LUMINAIRE, C.M.H. 90W LAMP, 240V (ACORN)
		LUMINAIRE, C.M.H. 60W LAMP, 240V (ACORN)

H.P.S.V. ORNAMENTAL LUMINAIRES

PROPOSED	PRESENT	
		310W PENDANT (240V)
		400W PENDANT (240V)
		250W PENDANT (240V)
		150W ACORN (120V)
		150W ACORN (240V)
		50W ACORN (240V)
		100W ACORN (240V)
		150W GLOBE (240V)
		100W GLOBE (240V)
		50W GLOBE (240V)

L.E.D. LUMINAIRES

PROPOSED	PRESENT	
		(400W HPSV EQUIVALENT), 240V
		(100W HPSV EQUIVALENT), 240V, ACORN
		(310W HPSV EQUIVALENT), 240V
		(100/150W HPSV EQUIVALENT), 240V ACORN
		(250W HPSV EQUIVALENT), 240V
		(50W HPSV EQUIVALENT), 240V, ACORN

F	01–08–14	ADDED LED LUMINAIRES A.VIEU
E	09–19–13	ADDED CMH LUMINAIRES A.VIEU
D	02–06–04	REVISED/REDRAW R.POOL/B.I.
C	04–01–02	REVISED/REDRAW R.POOL/B.I.
B	12–4–01	ADDED ORNAMENTAL SYMBOLS
A	8–6–96	REDRAWN
DATE		REVISION

SUPERSEDES DWG. #

WORK ORDER NO. _____ DATE _____

COST ALLOCATION ACCOUNT _____

APPROPRIATION ACCOUNT { MATERIAL _____ / LABOR _____

STANDARD CODE FOR TRAFFIC SIGNALS/ STREET LIGHTING

CITY OF CHICAGO
DEPT. OF TRANSPORTATION
DIVISION OF ENGINEERING
ELECTRICAL SECTION

DRAFTSMAN:	CHIEF DRAFTSMAN:	ENGINEER:
R. IVY	R. CARTER	R. POOL/R.C/W.T.

SUPERVISING ENGINEER: ELEC. DESIGN ENGR.

ENGINEER OF ELECTRICITY:

GEN'L SUPT. OF CONSTRUCTION:

DEPUTY COMMISSIONER:

DWG. NO. 826

SIZE: 22" | 36" SCALE: NONE DATE: 09–19–13

DESIGN BY:										
DRAWN BY:										
CHECKED BY:										
APPROVED BY:		4	7/3/2023	ISSUED FOR BID	JM	EM	JM			
CDOT/APPROVED BY:		NO.	DATE	REVISIONS	DES.	DRW.	CHK.	DCCO	CDOT	

TRANSYSTEMS
222 SOUTH RIVERSIDE PLAZA SUITE 610
CHICAGO, ILLINOIS 60606

SKIDMORE, OWINGS & MERRILL LLP
224 SOUTH MICHIGAN AVENUE, SUITE 1000
CHICAGO, ILLINOIS 60604

FACET ENGINEERING
4316 NORTH ELSTON AVENUE
CHICAGO, ILLINOIS 60641

CHICAGO DEPARTMENT OF TRANSPORTATION
DIVISION OF ENGINEERING

STATE / LAKE LOOP ELEVATED STATION
200 NORTH STATE STREET, CHICAGO, IL 60601

ELECTRICAL CDOT STANDARD SYMBOL LIST

CDOT PROJECT D-1-209 DATE: 9/9/2022

SPEC. NO.

DRAWING NO. E-181

REVISION NO.

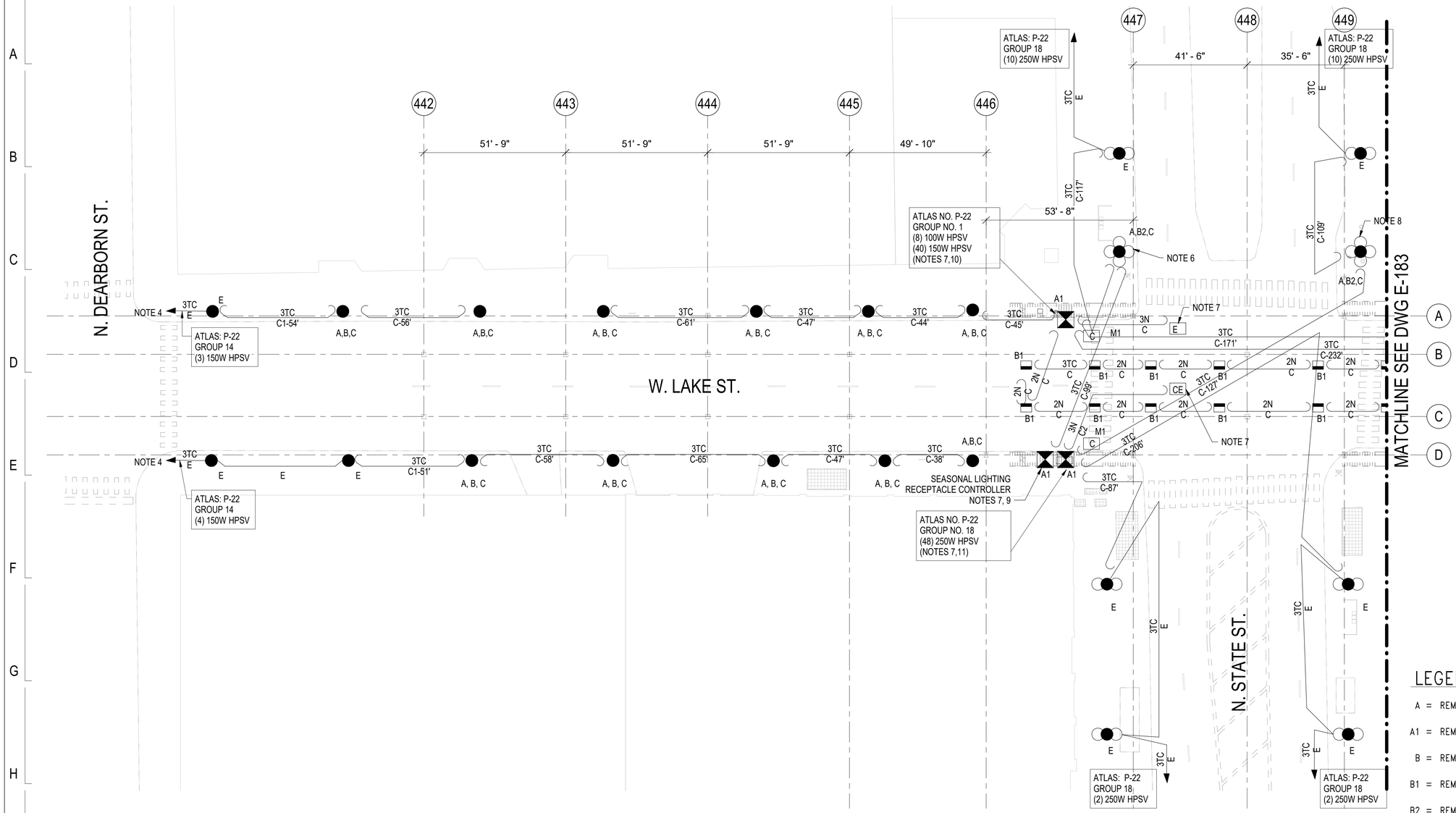

1 CDOT STREET - REMOVAL PLAN - PART 1

1" = 20'-0"

SHEET GENERAL NOTES

1. FOR ELECTRICAL GENERAL NOTES, SEE SHEET E-180. FOR LEGENDS AND SYMBOLS SEE SHEET E-181 FOR CDOT STANDARD DRAWING 826, STANDARD CODE FOR TRAFFIC SIGNALS/STREET LIGHTING.
2. ALL EXISTING WIRE AND CABLE SHOWN TO BE REMOVED SHALL BE REMOVED INCLUDING ALL UNDERGROUND CONDUIT.
3. PROVIDE TEMPORARY LAKE ST LIGHTING AND AERIAL CABLE PRIOR TO REMOVAL OF EXISTING LIGHTING.
4. EXISTING LIGHTING CONTROLLER GROUP 14 LOCATED SOUTHWEST CORNER OF DEARBORN ST. AND LAKE ST.
5. ALL EXISTING EQUIPMENT TO BE RETURNED TO DEO YARD 2451 AT S. ASHLAND.
6. SALVAGE EXISTING POLE, MAST ARM AND LUMINARES TO BE REINSTALLED ON NEW FOUNDATION.
7. REMOVE EXISTING GROUP 1 AND 18 LIGHTING CONTROLLER ELECTRIC SERVICE CABLES BACK TO EXISTING MANHOLE. CONTRACTOR TO PROVIDE TEMPORARY CONTROLLER AND POWER FOR EACH GROUP.
8. REMOVE EXISTING POLE, MAST ARM AND LUMINARES TO BE TURNED OVER TO CITY.
9. ONLY (1) 70A CB, UNABLE TO VERIFY LOAD. MOVE TO NEW SINGLE CONTROLLER AND REFEED CONNECTED LOAD. PULL BACK CABLES TO EXISTING MANHOLES AND PROTECT FOR RE-USE.
10. CONTAINS 100A-3P MAIN C.B., (6) 50A-2P AND (2) 50A-2P SPARE, (1) 20A-1P (CTA BUS SHELTER). REFER TO DWG E-185 FOR ADDITIONAL CB'S.
11. CONTAINS 100A-3P MAIN C.B., (2) 70A-2P, (2) 50A-1P. REFER TO DWG E-185 FOR ADDITIONAL CB'S.

LEGEND

A = REMOVE EXISTING POLE, MAST ARM AND FOUNDATION

A1 = REMOVE EXISTING LIGHTING CONTROLLER AND FOUNDATION

B = REMOVE EXISTING (2) 150W HPSV ACORN LUMINIARE

B1 = REMOVE EXISTING 100W HPSV CTA ELEVATED TRACK LUMINIARE

B2 = REMOVE EXISTING (4) 250W HPSV STATE STREET STREET LUMINAIRE

C = REMOVE EXISTING CABLE IN CONDUIT (NOTE 2)

C1 = REMOVE EXISTING CABLE TO NEXT EXISTING LIGHT POLE TO REMAIN.

E = EXISTING TO REMAIN

M1 = REMOVE EXISTING MANHOLE

ATLAS NO. P22 & Q22

LAKE ST. KEY PLAN:

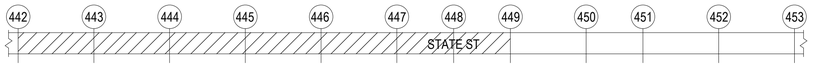

DESIGN BY:										
DRAWN BY:										
CHECKED BY:										
APPROVED BY:		4	7/3/2023	ISSUED FOR BID	JM	SM	OS			
CDOT/APPROVED BY:		NO.	DATE	REVISIONS	DES.	DRW.	CHK.	DCCO	CDOT	

TRANSYSTEMS
222 SOUTH RIVERSIDE PLAZA SUITE 610
CHICAGO, ILLINOIS 60606

SKIDMORE, OWINGS & MERRILL LLP
224 SOUTH MICHIGAN AVENUE, SUITE 1000
CHICAGO, ILLINOIS 60604

FACET ENGINEERING
4316 NORTH ELSTON AVENUE
CHICAGO, ILLINOIS 60641

CHICAGO DEPARTMENT OF TRANSPORTATION
DIVISION OF ENGINEERING

STATE / LAKE LOOP ELEVATED STATION
200 NORTH STATE STREET, CHICAGO, IL 60601

SPEC. NO.

CDOT STREET LIGHTING REMOVAL PLAN - PART 1

DRAWING NO. E-182

CDOT PROJECT D-1-209

DATE: 9/9/2022

REVISION NO.1

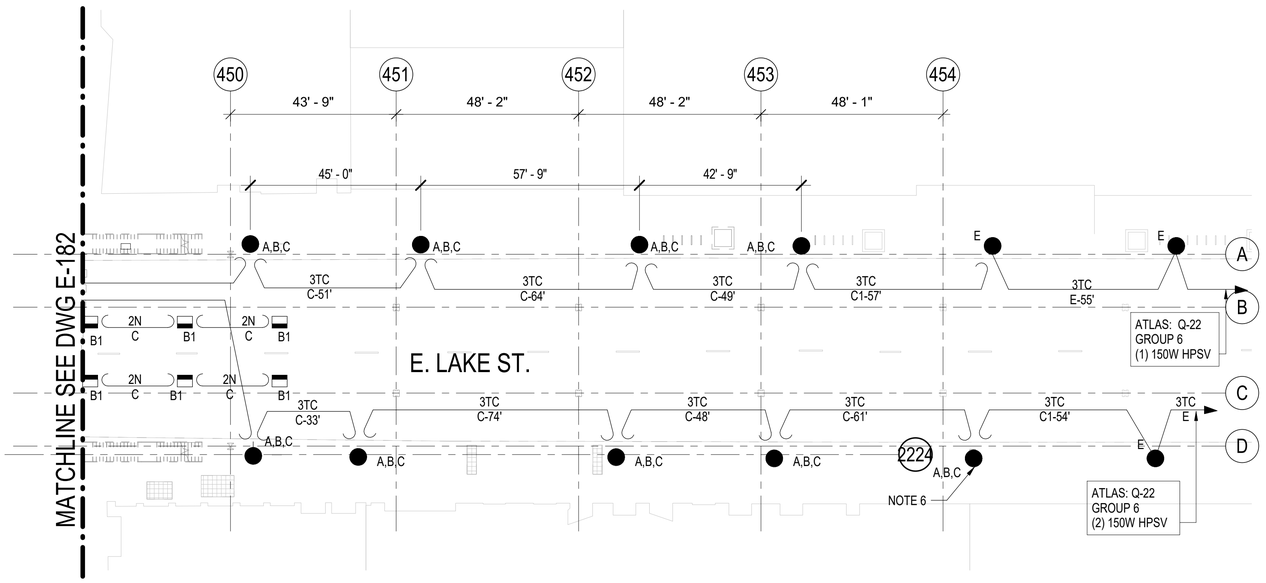

1 CDOT STREET - REMOVAL PLAN - PART 2

1" = 20'-0"

LEGEND

A = REMOVE EXISTING POLE, MAST ARM AND FOUNDATION

A1 = REMOVE EXISTING LIGHTING CONTROLLER AND FOUNDATION

B = REMOVE EXISTING (2) 150W HPSV ACORN LUMINIARE

B1 = REMOVE EXISTING 100W HPSV CTA ELEVATED TRACK LUMINIARE

B2 = REMOVE EXISTING (4) 250W HPSV STATE STREET STREET LUMINAIRE

C = REMOVE EXISTING CABLE IN CONDUIT (NOTE 2)

C1 = REMOVE EXISTING CABLE TO NEXT EXISTING LIGHT POLE TO REMAIN.

E = EXISTING TO REMAIN

M1 = REMOVE EXISTING MANHOLE

NOTES:

1. REFER TO DRAWING E-182 FOR LEGEND AND SHEET GENERAL NOTES.

ATLAS NO. P22 & Q22

LAKE ST. KEY PLAN:

DESIGN BY:										
DRAWN BY:										
CHECKED BY:										
APPROVED BY:		4	7/3/2023	ISSUED FOR BID	JM	EM	SM			
CDOT/APPROVED BY:		NO.	DATE	REVISIONS	DES.	DRW.	CHK.	DCCO	CDOT	

TRANSYSTEMS
222 SOUTH RIVERSIDE PLAZA SUITE 610
CHICAGO, ILLINOIS 60606

SKIDMORE, OWINGS & MERRILL LLP
224 SOUTH MICHIGAN AVENUE, SUITE 1000
CHICAGO, ILLINOIS 60604

FACET ENGINEERING
4316 NORTH ELSTON AVENUE
CHICAGO, ILLINOIS 60641

CHICAGO DEPARTMENT OF TRANSPORTATION
DIVISION OF ENGINEERING

STATE / LAKE LOOP ELEVATED STATION
200 NORTH STATE STREET, CHICAGO, IL 60601

SPEC. NO.

CDOT STREET LIGHTING REMOVAL PLAN - PART 2

DRAWING NO.
E-183

CDOT PROJECT D-1-209

DATE: 9/9/2022

REVISION NO.

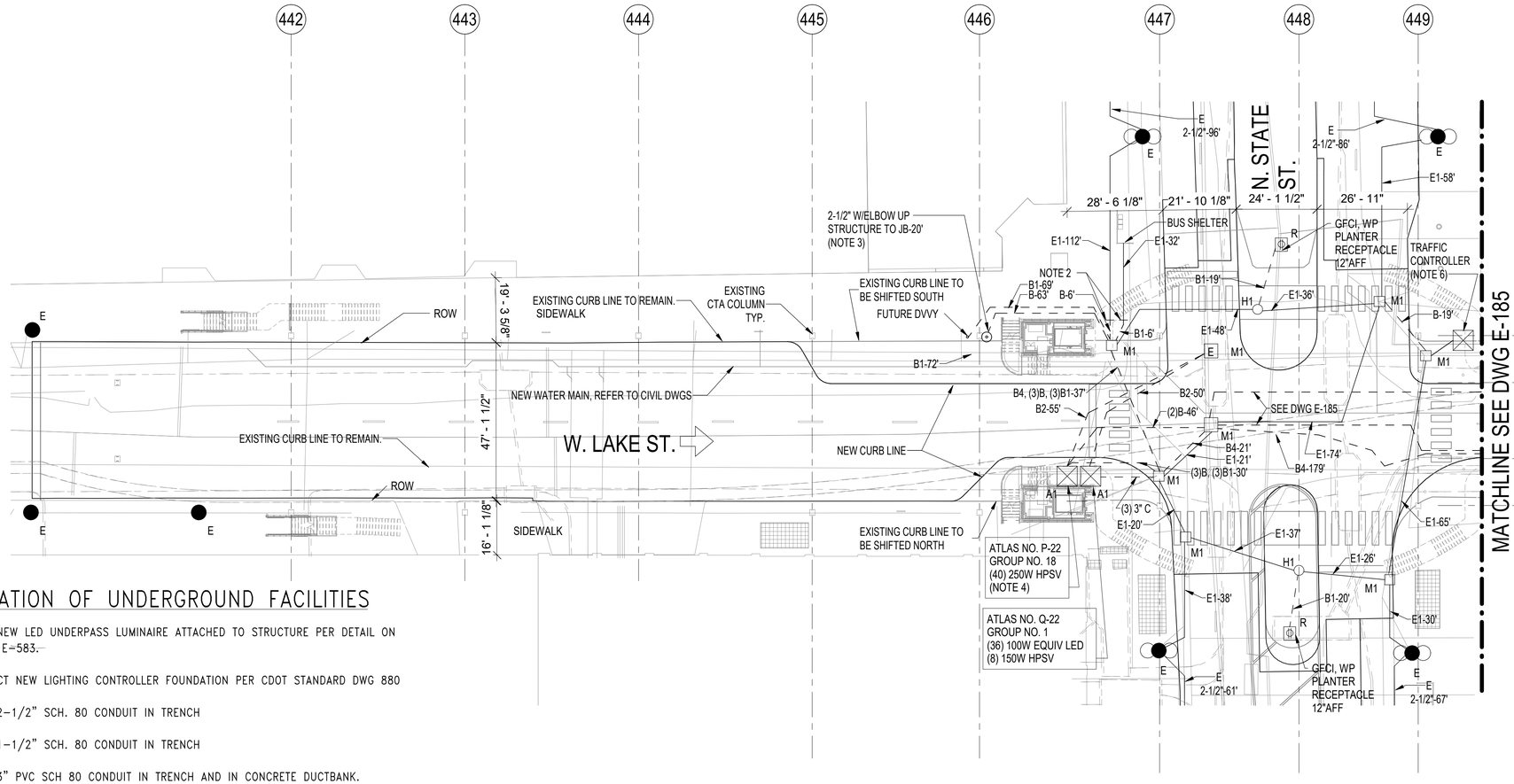

INSTALLATION OF UNDERGROUND FACILITIES

A = INSTALL NEW LED UNDERPASS LUMINAIRE ATTACHED TO STRUCTURE PER DETAIL ON DRAWING E-583.

A1 = CONSTRUCT NEW LIGHTING CONTROLLER FOUNDATION PER CDOT STANDARD DWG 880

B = INSTALL 2-1/2" SCH. 80 CONDUIT IN TRENCH

B1 = INSTALL 1-1/2" SCH. 80 CONDUIT IN TRENCH

B2 = INSTALL 3" PVC SCH 80 CONDUIT IN TRENCH AND IN CONCRETE DUCTBANK. DUCTBANK PER COMED STANDARDS

B3 = INSTALL 1" GRS CONDUIT ATTACHED TO STRUCTURE USING FIBERGLASS UNISTRUT.

B4 = INSTALL (4) 3" SCH. 40 CONDUIT IN TRENCH AND IN CONCRETE DUCTBANK FOR RELOCATED 911, TRAFFIC AND COMMUNICATION F.O. AND COPPER CABLES. ALL CABLES TO BE RELOCATED BE OTHER. REMOVE EXISTING DUCTBANK AFTER INSTALLATION OF NEW DUCTBANK. REFER TO DETAIL 1 ON DRAWING E-584.

C = REINSTALL LIGHT POLE ON NEW FOUNDATION.

E = EXISTING LIGHT POLE TO REMAIN.

E1 = EXISTING UNDERGROUND CONDUIT

M = INSTALL 3'X4'X4' MANHOLE WITH 24" FRAME AND COVER PER CDOT STANDARD DRAWING 730 AND 872.

M1 = EXISTING MANHOLE TO REMAIN

M2 = NEW HANDHOLE PER DEO STANDARD #867.

R = INSTALL 20A GFCI DUPLEX RECEPTACLE IN WEATHERPROOF ENCLOSURE. CONNECT TO STATE STREET SEASONAL RECEPTACLE CONTROLLER.

1 CDOT STREET - UNDERGROUND CONDUIT AND FACILITIES PLAN - PART 1

1" = 20'-0"

LEGEND

PROPOSED	EXISTING	
□	□	MANHOLE, CITY
— —	———	CONDUIT ATTACH TO STRUCTURE
- - - -	———	CONDUIT IN TRENCH
◌	○	HANDHOLE PER CDOT STANDARD DRAWINGS #867.
J		6"X6"X2" STAINLESS STEEL JUNCTION BOX MOUNTED TO STRUCTURE WITH FIBERGLASS UNISTRUT

NOTES:

1. FOR ELECTRICAL GENERAL NOTES, SEE SHEET E-180. FOR LEGENDS AND SYMBOLS SEE SHEET E-181 FOR CDOT STANDARD DRAWING 826, STANDARD CODE FOR TRAFFIC SIGNALS/STREET LIGHTING.
2. INTERCEPT EXISTING UNDER GROUND CONDUIT AND EXTEND AS SHOWN ON PLANS.
3. PROVIDE NEW CONDUIT RISER ATTACHED TO CTA COLUMN USING FIBERGLASS UNISTRUT. REFER TO UNDERGROUND CONDUIT PLAN DRAWINGS FOR CONTINUATION.
4. PROVIDE TWO LIGHTING CONTROLLERS WITH CIRCUIT BREAKERS AND CONTACTORS TO MATCH EXISTING CONTENT OF STATE ST. LIGHTING CONTROLLER AND SEASONAL RECEPTACLE CONTROLLER. PULL EXISTING CABLES INTO NEW CONTROLLERS AND TERMINATE.
5. REFER TO DRAWING E-185 FOR LIGHTING CONTROLLER LOAD TABLES.
6. PROVIDE NEW 70A-1P POWER FEED TO NEW TRAFFIC CONTROLLER.
7. CONTRACTOR SHALL CONTACT DIGGER (312) 744-7000 TO NOTIFY UTILITY OWNER PRIOR TO TRENCHING OR DIRECTIONAL BORING WORK (72 HOURS PRIOR TO COMMENCING WORK) TO PREVENT DAMAGE TO UTILITIES. CONTRACTOR SHALL COMPLY WITH ALL EXISTING FACILITY PROTECTION REQUIREMENTS.
8. CONTRACTOR TO REMOVE TEMPORARY CONTROLLER, LIGHTING, AND SERVICE POWER UPON COMPLETION OF NEW WORK.
9. MOUNT CDOT UNDERPASS LIGHT FIXTURE TO COMMUNICATIONS ROOM STRUCTURAL BEAM. ALIGN BOTTOM OF LIGHT FIXTURE TO BE AT THE SAME ELEVATION AS THE LOWEST TRACK STRUCTURE FLANGE.

ATLAS NO. P22 & Q22

LAKE ST. KEY PLAN:

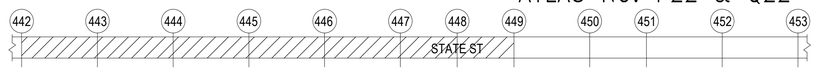

DESIGN BY:										
DRAWN BY:										
CHECKED BY:										
APPROVED BY:		4	7/3/2023	ISSUED FOR BID	JM	EM	OS			
CDOT/APPROVED BY:		NO.	DATE	REVISIONS	DES.	DRW.	CHK.	DCCO	CDOT	

TRANSYSTEMS
222 SOUTH RIVERSIDE PLAZA SUITE 610
CHICAGO, ILLINOIS 60606

SKIDMORE, OWINGS & MERRILL LLP
224 SOUTH MICHIGAN AVENUE, SUITE 1000
CHICAGO, ILLINOIS 60604

FACET ENGINEERING
4316 NORTH ELSTON AVENUE
CHICAGO, ILLINOIS 60641

CHICAGO DEPARTMENT OF TRANSPORTATION
DIVISION OF ENGINEERING

STATE / LAKE LOOP ELEVATED STATION
200 NORTH STATE STREET, CHICAGO, IL 60601

CDOT STREET LIGHTING UNDERGROUND CONDUIT AND FACILITIES PLAN - PART 1

CDOT PROJECT D-1-209 | DATE: 9/9/2022

SPEC. NO.

DRAWING NO. E-184

REVISION NO.1

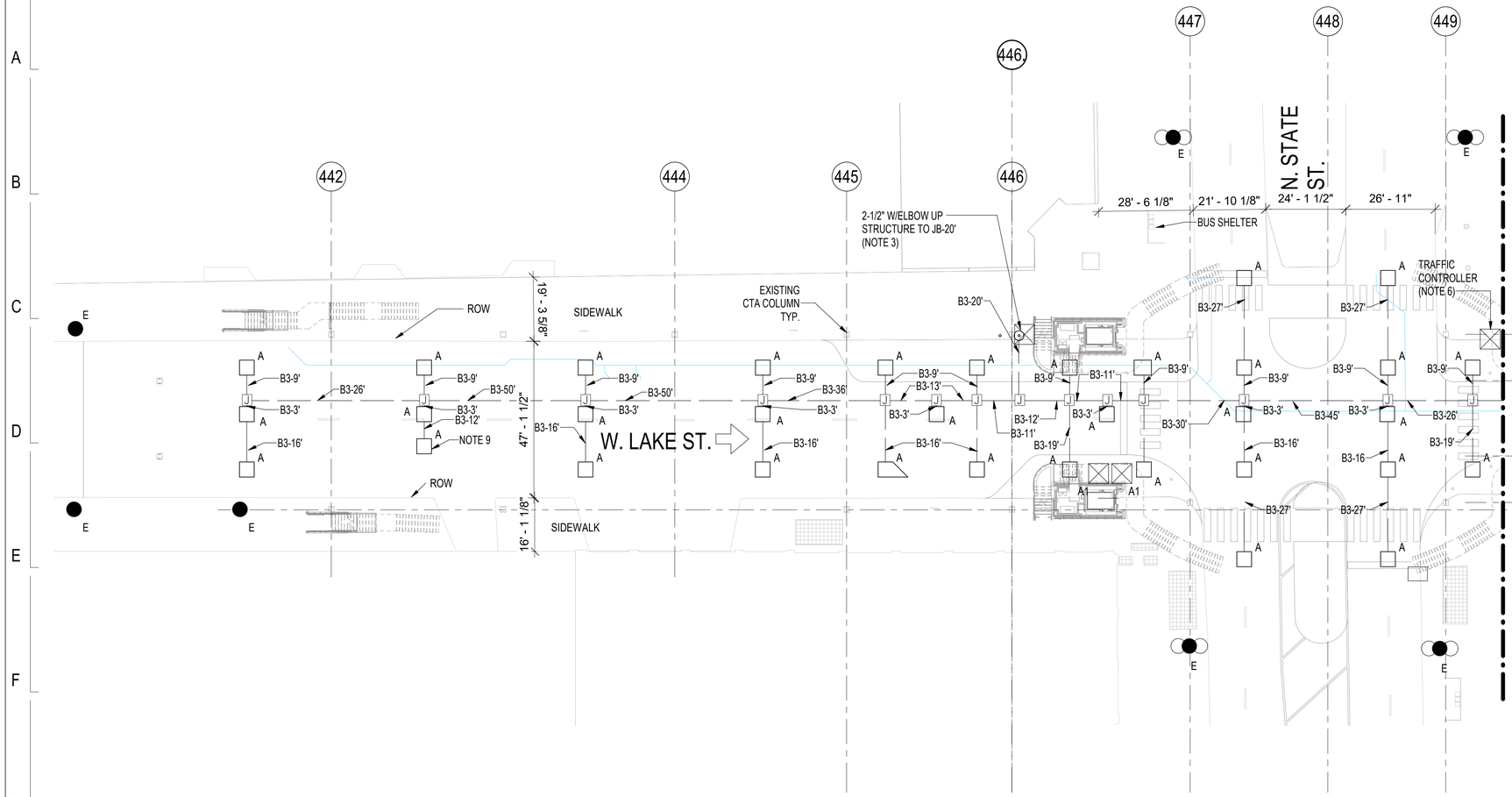

NOTES:

1. FOR ELECTRICAL GENERAL NOTES, SEE SHEET E-180. FOR LEGENDS AND SYMBOLS SEE SHEET E-181 FOR CDOT STANDARD DRAWING 826, STANDARD CODE FOR TRAFFIC SIGNALS/STREET LIGHTING.
2. INTERCEPT EXISTING UNDER GROUND CONDUIT AND EXTEND AS SHOWN ON PLANS.
3. PROVIDE NEW CONDUIT RISER ATTACHED TO CTA COLUMN USING FIBERGLASS UNISTRUT. REFER TO UNDERGROUND CONDUIT PLAN DRAWINGS FOR CONTINUATION.
4. PROVIDE TWO LIGHTING CONTROLLERS WITH CIRCUIT BREAKERS AND CONTACTORS TO MATCH EXISTING CONTENT OF STATE ST. LIGHTING CONTROLLER AND SEASONAL RECEPTACLE CONTROLLER. PULL EXISTING CABLES INTO NEW CONTROLLERS AND TERMINATE.
5. REFER TO DRAWING E-185 FOR LIGHTING CONTROLLER LOAD TABLES.
6. PROVIDE NEW 70A-1P POWER FEED TO NEW TRAFFIC CONTROLLER.
7. CONTRACTOR SHALL CONTACT DIGGER (312) 744-7000 TO NOTIFY UTILITY OWNER PRIOR TO TRENCHING OR DIRECTIONAL BORING WORK (72 HOURS PRIOR TO COMMENCING WORK) TO PREVENT DAMAGE TO UTILITIES. CONTRACTOR SHALL COMPLY WITH ALL EXISTING FACILITY PROTECTION REQUIREMENTS.
8. CONTRACTOR TO REMOVE TEMPORARY CONTROLLER, LIGHTING, AND SERVICE POWER UPON COMPLETION OF NEW WORK.
9. MOUNT CDOT UNDERPASS LIGHT FIXTURE TO COMMUNICATIONS ROOM STRUCTURAL BEAM. ALIGN BOTTOM OF LIGHT FIXTURE TO BE AT THE SAME ELEVATION AS THE LOWEST TRACK STRUCTURE FLANGE.

INSTALLATION OF UNDERGROUND FACILITIES

A = INSTALL NEW LED UNDERPASS LUMINAIRE ATTACHED TO STRUCTURE PER DETAIL ON DRAWING E-583.

A1 = CONSTRUCT NEW LIGHTING CONTROLLER FOUNDATION PER CDOT STANDARD DWG 880

B = INSTALL 2-1/2" SCH. 80 CONDUIT IN TRENCH

B1 = INSTALL 1-1/2" SCH. 80 CONDUIT IN TRENCH

B2 = INSTALL 3" PVC SCH 80 CONDUIT IN TRENCH AND IN CONCRETE DUCTBANK. DUCTBANK PER COMED STANDARDS

B3 = INSTALL 1" GRS CONDUIT ATTACHED TO STRUCTURE USING FIBERGLASS UNISTRUT.

C = REINSTALL LIGHT POLE ON NEW FOUNDATION.

E = EXISTING LIGHT POLE TO REMAIN.

E1 = EXISTING UNDERGROUND CONDUIT

M = INSTALL 3'X4'X4' MANHOLE WITH 24" FRAME AND COVER PER CDOT STANDARD DRAWING 730 AND 872.

M1 = EXISTING MANHOLE TO REMAIN

M2 = NEW HANDHOLE PER DEO STANDARD #867.

R = INSTALL 20A GFCI DUPLEX RECEPTACLE IN WEATHERPROOF ENCLOSURE. CONNECT TO STATE STREET SEASONAL RECEPTACLE CONTROLLER.

1 CDOT STREET - UNDERPASS CONDUIT AND FACILITIES PLAN - PART 1

1" = 20'-0"

LEGEND

PROPOSED	EXISTING	
□	□	MANHOLE, CITY
—— ——	——	CONDUIT ATTACH TO STRUCTURE
- - - - -	——	CONDUIT IN TRENCH
◠	○	HANDHOLE PER CDOT STANDARD DRAWINGS #867.
J		6"X6"X2" STAINLESS STEEL JUNCTION BOX MOUNTED TO STRUCTURE WITH FIBERGLASS UNISTRUT

LAKE ST. KEY PLAN:

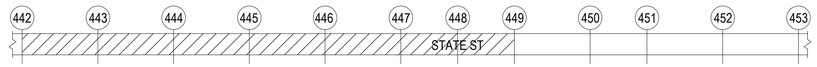

DESIGN BY:										
DRAWN BY:										
CHECKED BY:										
APPROVED BY:		4	7/3/2023	ISSUED FOR BID	JM	EM	SM			
CDOT/APPROVED BY:		NO.	DATE	REVISIONS	DES.	DRW.	CHK.	DCCO	CDOT	

TRANSYSTEMS
222 SOUTH RIVERSIDE PLAZA SUITE 610
CHICAGO, ILLINOIS 60606

SKIDMORE, OWINGS & MERRILL LLP
224 SOUTH MICHIGAN AVENUE, SUITE 1000
CHICAGO, ILLINOIS 60604

FACET ENGINEERING
4316 NORTH ELSTON AVENUE
CHICAGO, ILLINOIS 60641

CHICAGO DEPARTMENT OF TRANSPORTATION
DIVISION OF ENGINEERING

STATE / LAKE LOOP ELEVATED STATION
200 NORTH STATE STREET, CHICAGO, IL 60601

CDOT STREET UNDERPASS CONDUIT AND FACILITIES PLAN - PART 1

CDOT PROJECT D-1-209 | DATE: 9/9/2022

SPEC. NO.

DRAWING NO. E-184A

REVISION NO.1

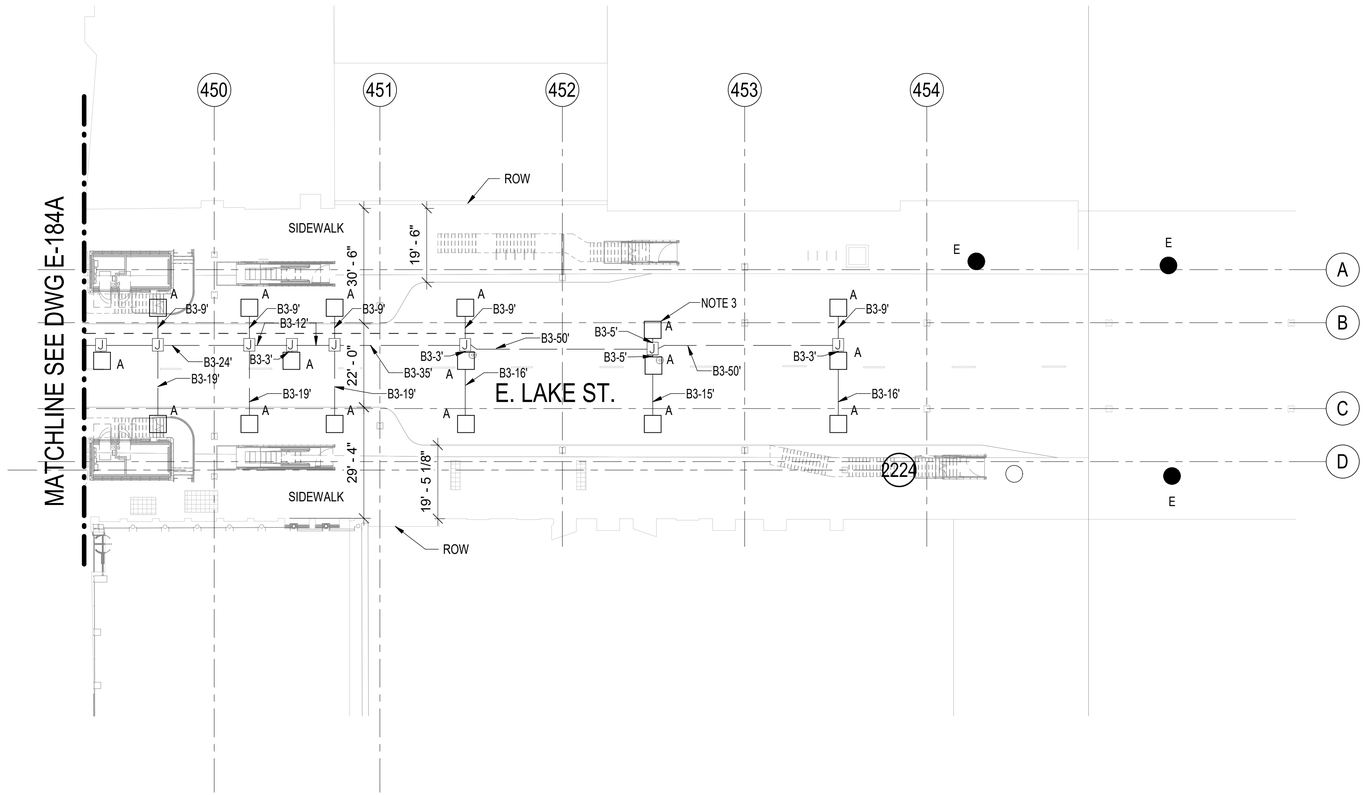

1 CDOT STREET - UNDERPASS CONDUIT AND FACILITIES PLAN - PART 2

1" = 20'-0"

NOTES:

1. REFER TO DRAWING E-184A FOR LEGEND, NOTES, AND INSTALLATION OF UNDERGROUND FACILIITES NOTES.
2. CONTRACTOR TO VERIFY EXISTING LIGHTING CONTROLLER CIRCUIT REQUIREMENTS IN FIELD AND PROVIDE CIRCUIT BREKAERS AS NEEDED.
3. MOUNT CDOT UNDERPASS LIGHT FIXTURE TO ELECTRICAL ROOM STRUCTURAL BEAM. ALIGN BOTTOM OF LIGHT FIXTURE TO BE AT THE SAME ELEVATION AS THE LOWEST TRACK STRUCTURE FLANGE.

LEGEND

PROPOSED	EXISTING	
□	□	MANHOLE, CITY
—— ——	——	CONDUIT ATTACH TO STRUCTURE
– – – – –	——	CONDUIT IN TRENCH
◌	○	HANDHOLE PER CDOT STANDARD DRAWINGS #867.
J		6"X6"X2" STAINLESS STEEL JUNCTION BOX MOUNTED TO STRUCTURE WITH FIBERGLASS UNISTRUT

LAKE ST. KEY PLAN:

DESIGN BY:										
DRAWN BY:										
CHECKED BY:										
APPROVED BY:		4	7/3/2023	ISSUED FOR BID	JM	EM	SM			
CDOT/APPROVED BY:		NO.	DATE	REVISIONS	DES.	DRW.	CHK.	DCCO	CDOT	

TRANSYSTEMS
222 SOUTH RIVERSIDE PLAZA SUITE 610
CHICAGO, ILLINOIS 60606

SKIDMORE, OWINGS & MERRILL LLP
224 SOUTH MICHIGAN AVENUE, SUITE 1000
CHICAGO, ILLINOIS 60604

FACET ENGINEERING
4316 NORTH ELSTON AVENUE
CHICAGO, ILLINOIS 60641

CHICAGO DEPARTMENT OF TRANSPORTATION
DIVISION OF ENGINEERING

STATE / LAKE LOOP ELEVATED STATION
200 NORTH STATE STREET, CHICAGO, IL 60601

CDOT STREET UNDERPASS CONDUIT AND FACILITIES PLAN - PART 2

CDOT PROJECT D-1-209

DATE: 9/9/2022

SPEC. NO.

DRAWING NO. E-184B

REVISION NO. 1

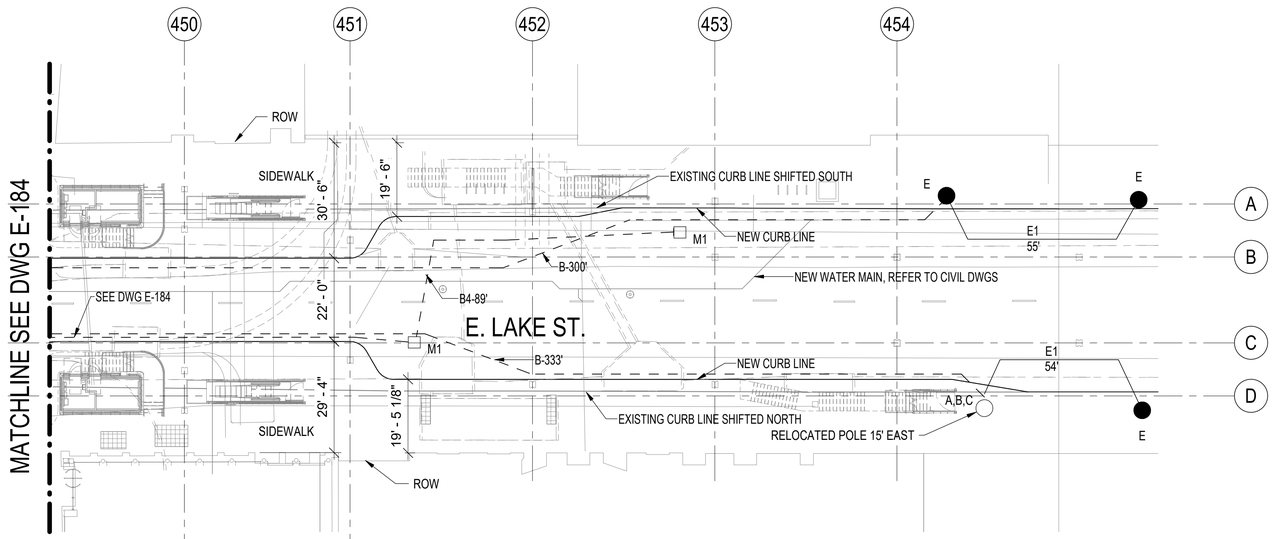

1 CDOT STREET - UNDERGROUND CONDUIT AND FACILITIES PLAN - PART 2

1" = 20'-0"

LEGEND

PROPOSED	EXISTING	
□	□	MANHOLE, CITY
—— ——	——	CONDUIT ATTACH TO STRUCTURE
- - - -	——	CONDUIT IN TRENCH
◌	○	HANDHOLE PER CDOT STANDARD DRAWINGS #867.
[J]		6"X6"X2" STAINLESS STEEL JUNCTION BOX MOUNTED TO STRUCTURE WITH FIBERGLASS UNISTRUT

NOTES:

1. REFER TO DRAWING E-184 FOR LEGEND, NOTES, AND INSTALLATION OF UNDERGROUND FACILIITES NOTES.
2. CONTRACTOR TO VERIFY EXISTING LIGHTING CONTROLLER CIRCUIT REQUIREMENTS IN FIELD AND PROVIDE CIRCUIT BREKAERS AS NEEDED.

ATLAS NO. P22 & Q22

LAKE ST. KEY PLAN:

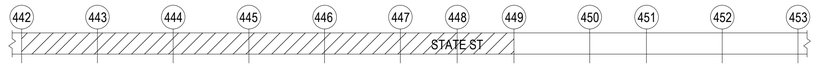

DESIGN BY:										
DRAWN BY:										
CHECKED BY:										
APPROVED BY:		4	7/3/2023	ISSUED FOR BID	JM	EM	SM			
CDOT/APPROVED BY:		NO.	DATE	REVISIONS	DES.	DRW.	CHK.	DCCO	CDOT	

TRANSYSTEMS
222 SOUTH RIVERSIDE PLAZA SUITE 610
CHICAGO, ILLINOIS 60606

SKIDMORE, OWINGS & MERRILL LLP
224 SOUTH MICHIGAN AVENUE, SUITE 1000
CHICAGO, ILLINOIS 60604

FACET ENGINEERING
4316 NORTH ELSTON AVENUE
CHICAGO, ILLINOIS 60641

CHICAGO DEPARTMENT OF TRANSPORTATION
DIVISION OF ENGINEERING

STATE / LAKE LOOP ELEVATED STATION
200 NORTH STATE STREET, CHICAGO, IL 60601

CDOT STREET LIGHTING UNDERGROUND CONDUIT AND FACILITIES PLAN - PART 2

CDOT PROJECT D-1-209 | DATE: 9/9/2022

SPEC. NO.

DRAWING NO. E-185

REVISION NO.

INSTALLATION OF STREET LIGHTING EQUIPMENT

A = INSTALL STREET LIGHTING CABLE 3TC (2 1/C #6 & 1/C #8) IN 2" CONDUIT.

B1 = INSTALL NEW LED UNDERPASS NEWSTAR LUMINAIRE MODEL NUMBER ADLLP-T2-WLR-C-MIC-W10-30-CHI, 100W LED WITH EL BRACKET SYSTEM. 20'-4" MOUNTING HEIGHT ATTACHED TO BOTTOM OF PLATFORM FLANGE. CONNECT TO CDOT SILVER SPRING SMART LIGHTING SYSTEM.

B2 = INSTALL NEW LED UNDERPASS NEWSTAR LUMINAIRE MODEL NUMBER ADLLP-T2-WLR-C-MIC-W10-30-CHI, 100W LED WITH EL BRACKET SYSTEM. 15'-8" MOUNTING HEIGHT ATTACHED TO BOTTOM OF TRACK STRINGER. CONNECT TO CDOT SILVER SPRING SMART LIGHTING SYSTEM.

E = EXISTING

H = INSTALL 200A-208/120V ARTERIAL STREET LIGHT CONTROLLER AS PER DRAWING 880, AND 864. (1) 60A-2P UNDERPASS CONTROLLER, (1) 70a-1P FOR TRAFFIC CONTROLLER, (4) 50A (2P), (2) 30A-120V(1P), (1) 20A-120(1P) FOR FUTURE DIVVY

H1 = INSTALL 200A-208/120V STATE STREET LIGHT CONTROLLER AS PER DRAWING 880 AND 864. (6) 50A-2P, (6) 50A-1P, (2) 30A-120V(1P), (20) 20A-120V(1P) FOR BUS SHELTER

H2 = INSTALL 60A-208/120V STATE STREET SEASONAL RECEPTACLE CONTROLLER (18) 20A-1P

H3 = INSTALL UNDERPASS LIGHT CONTROLLER PER CDOT STANDARD DRAWING 861A

R = INSTALL 20A GFCI DUPLEX RECEPTACLE IN WEATHERPROOF ENCLOSURE. CONNECT TO STATE STREET SEASONAL RECEPTACLE CONTROLLER.

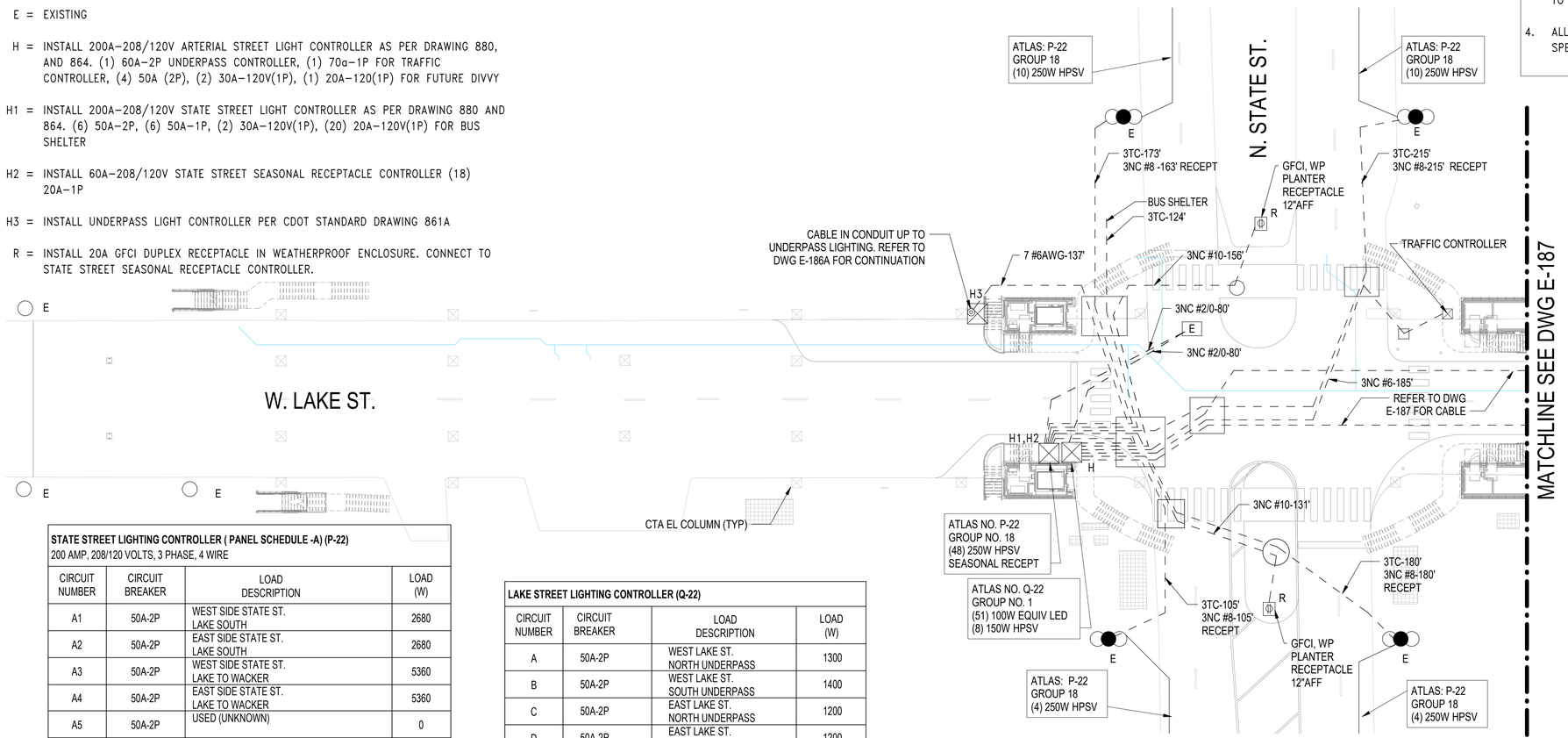

SHEET GENERAL NOTES

1. FOR ELECTRICAL GENERAL NOTES, SEE SHEET E-180. FOR LEGENDS AND SYMBOLS SEE SHEET E-181 FOR CDOT STANDARD DRAWING 826, STANDARD CODE FOR TRAFFIC SIGNALS/STREET LIGHTING.
2. INSTALLL SERVICE EQUIPMENT AS PER CDOT STANDARD DRAWING #864.
3. ALL LIGHTING EQUIPMENT INSTALLED WITH NODES. COMMISSION OF NODES INTO CENTRAL SYSTEM MUST BE COMPLETED PRIOR TO TURN PROJECT OVER TO CITY.
4. ALL UNDERPASS LIGHTING CABLE #6AWG AS PER CDOT SPECIFICATION 1534.

STATE STREET CONTROLLER (P-22)
(SEASONAL LIGHTING RECEPTACLE OUTLET PANEL SCHEDULE -B)

CIRCUIT NUMBER	CIRCUIT BREAKER	LOAD DESCRIPTION	LOAD (WATTS)
B1	20A-1P	WEST SIDE STATE ST. LAKE SOUTH	400
B2	20A-1P	EAST SIDE STATE ST. LAKE SOUTH	400
B3	20A-1P	WEST SIDE STATE ST. LAKE TO WACKER	200
B4	20A-1P	EAST SIDE STATE ST. LAKE TO WACKER	200
B5	20A-1P	WEST SIDE STATE ST. LAKE TO WACKER	400
B6	20A-1P	EAST SIDE STATE ST. LAKE TO WACKER	400
B7	20A-1P	WEST SIDE STATE ST. LAKE TO WACKER	200
B8	20A-1P	EAST SIDE STATE ST. LAKE TO WACKER	200
B9	20A-1P	USED (UNKNOWN)	0
B10	20A-1P	USED (UNKNOWN)	0
B11	20A-1P	USED (UNKNOWN)	0
B12	20A-1P	USED (UNKNOWN)	0
B13	20A-1P	USED (UNKNOWN)	0
B14	20A-1P	USED (UNKNOWN)	0
B15	20A-1P	USED (UNKNOWN)	0
B16	20A-1P	USED (UNKNOWN)	0
B17	20A-1P	USED (UNKNOWN)	0
B18	20A-1P	USED (UNKNOWN)	0
B19	20A-1P	NEW NORTH STATE ST MEDIAN RECEPTACLE (EXISTING SPARE)	400
B20	20A-10	NEW SOUTH STATE ST MEDIAN RECEPTACLE (EXISTING SPARE)	400
TOTAL LOAD			2400

STATE STREET LIGHTING CONTROLLER (PANEL SCHEDULE -A) (P-22)
200 AMP, 208/120 VOLTS, 3 PHASE, 4 WIRE

CIRCUIT NUMBER	CIRCUIT BREAKER	LOAD DESCRIPTION	LOAD (W)
A1	50A-2P	WEST SIDE STATE ST. LAKE SOUTH	2680
A2	50A-2P	EAST SIDE STATE ST. LAKE SOUTH	2680
A3	50A-2P	WEST SIDE STATE ST. LAKE TO WACKER	5360
A4	50A-2P	EAST SIDE STATE ST. LAKE TO WACKER	5360
A5	50A-2P	USED (UNKNOWN)	0
A6	50A-2P	USED (UNKNOWN)	0
A7	50A-1P	WEST SIDE STATE ST. LAKE TO WACKER	2040
A8	50A-1P	EAST SIDE STATE ST. LAKE TO WACKER	2040
A9	50A-1P	WEST SIDE STATE ST. LAKE TO WACKER	1720
A10	50A-1P	EAST SIDE STATE ST. LAKE TO WACKER	1720
A11	50A-1P	WEST SIDE STATE ST. LAKE TO WACKER	1720
A12	50A-1P	EAST SIDE STATE ST. LAKE TO WACKER	1720
A13	20A-1P	BUS SHELTER	1000
TOTAL LOAD			28040

LAKE STREET LIGHTING CONTROLLER (Q-22)

CIRCUIT NUMBER	CIRCUIT BREAKER	LOAD DESCRIPTION	LOAD (W)
A	50A-2P	WEST LAKE ST. NORTH UNDERPASS	1300
B	50A-2P	WEST LAKE ST. SOUTH UNDERPASS	1400
C	50A-2P	EAST LAKE ST. NORTH UNDERPASS	1200
D	50A-2P	EAST LAKE ST. SOUTH UNDERPASS	1200
E	50A-2P	NW LIGHT POLE	150
F	50A-2P	NE LIGHT POLES (2)	600
G	50A-2P	SE LIGHT POLES (2)	600
H	70A-1P	TRAFFIC CONTROLLER	1000
TOTAL LOAD			7450

ATLAS NO. P22 & Q22

1 CDOT STREET - INSTALLATION PLAN - PART 1

NTS

LAKE ST. KEY PLAN:

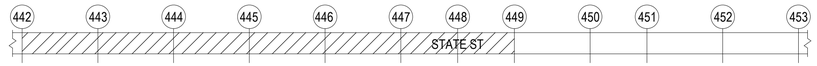

NO.	DATE	REVISIONS	DES.	DRW.	CHK.	DCCO	CDOT
4	7/3/2023	ISSUED FOR BID	JM	SM	OS		

DESIGN BY:
DRAWN BY:
CHECKED BY:
APPROVED BY:
CDOT/APPROVED BY:

TRANSYSTEMS
222 SOUTH RIVERSIDE PLAZA SUITE 610
CHICAGO, ILLINOIS 60606

SKIDMORE, OWINGS & MERRILL LLP
224 SOUTH MICHIGAN AVENUE, SUITE 1000
CHICAGO, ILLINOIS 60604

FACET ENGINEERING
4316 NORTH ELSTON AVENUE
CHICAGO, ILLINOIS 60641

CHICAGO DEPARTMENT OF TRANSPORTATION
DIVISION OF ENGINEERING

STATE / LAKE LOOP ELEVATED STATION
200 NORTH STATE STREET, CHICAGO, IL 60601

CDOT STREET LIGHTING INSTALLATION PLAN - PART 1

CDOT PROJECT D-1-209

DATE: 9/9/2022

SPEC. NO.

DRAWING NO. E-186

REVISION NO.

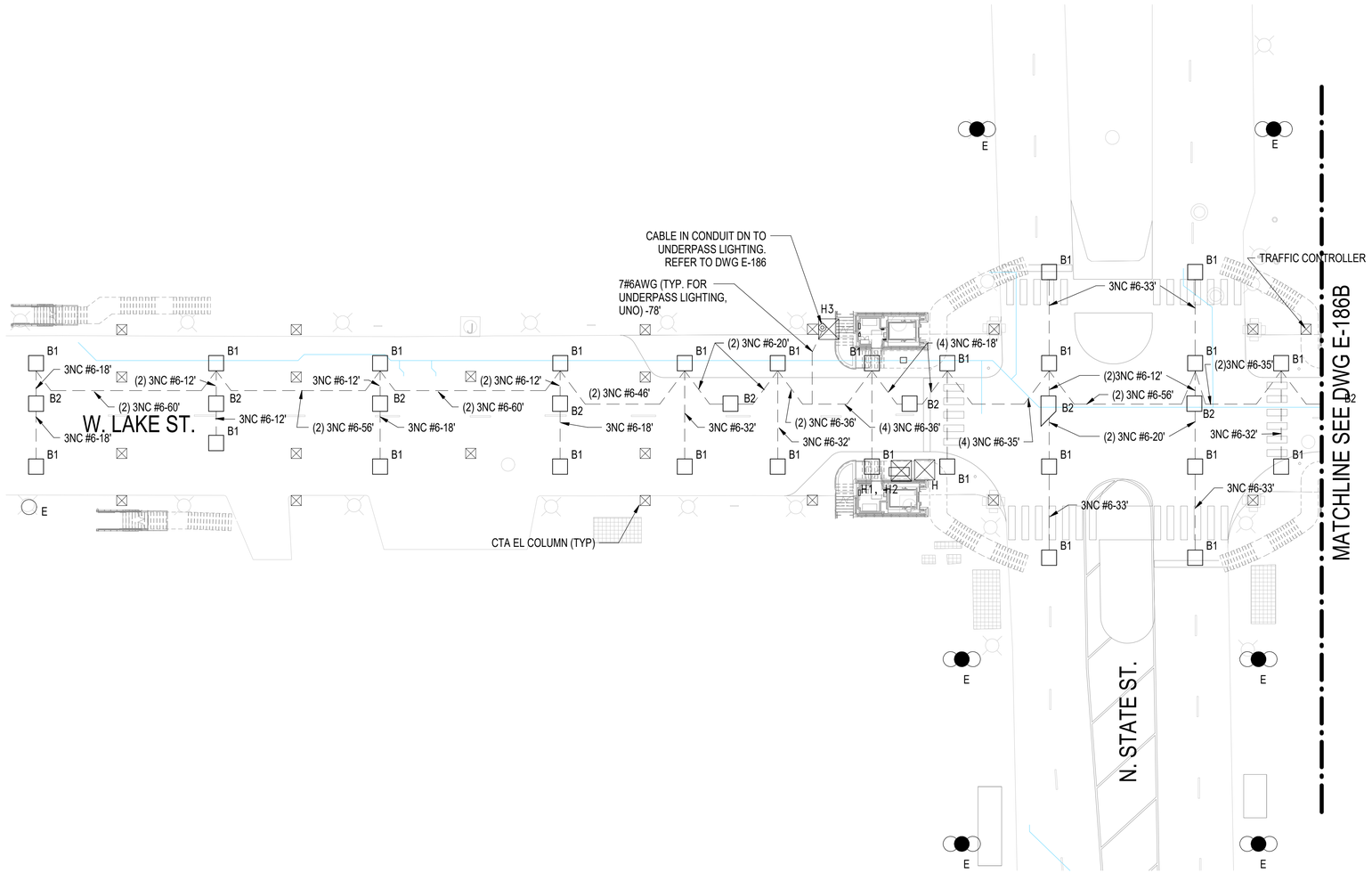

1 CDOT STREET - UNDERPASS LIGHTING INSTALLATION PLAN - PART 1

1" = 20'-0"

SHEET GENERAL NOTES

1. FOR ELECTRICAL GENERAL NOTES, SEE SHEET E-180. FOR LEGENDS AND SYMBOLS SEE SHEET E-181 FOR CDOT STANDARD DRAWING 826, STANDARD CODE FOR TRAFFIC SIGNALS/STREET LIGHTING.
2. INSTALLL SERVICE EQUIPMENT AS PER CDOT STANDARD DRAWING #864.
3. ALL LIGHTING EQUIPMENT INSTALLED WITH NODES. COMMISSION OF NODES INTO CENTRAL SYSTEM MUST BE COMPLETED PRIOR TO TURN PROJECT OVER TO CITY.
4. ALL UNDERPASS LIGHTING CABLE #6AWG AS PER CDOT SPECIFICATION 1534.

INSTALLATION OF STREET LIGHTING EQUIPMENT

A = INSTALL STREET LIGHTING CABLE 3TC (2 1/C #6 & 1/C #8) IN 2" CONDUIT.

B1 = INSTALL NEW LED UNDERPASS NEWSTAR LUMINAIRE MODEL NUMBER ADLLP-T2-WLR-C-MIC-W10-30-CHI, 100W LED WITH EL BRACKET SYSTEM. 20'-4" MOUNTING HEIGHT ATTACHED TO BOTTOM OF PLATFORM FLANGE. CONNECT TO CDOT SILVER SPRING SMART LIGHTING SYSTEM.

B2 = INSTALL NEW LED UNDERPASS NEWSTAR LUMINAIRE MODEL NUMBER ADLLP-T2-WLR-C-MIC-W10-30-CHI, 100W LED WITH EL BRACKET SYSTEM. 15'-8" MOUNTING HEIGHT ATTACHED TO BOTTOM OF TRACK STRINGER. CONNECT TO CDOT SILVER SPRING SMART LIGHTING SYSTEM.

E = EXISTING

H = INSTALL 200A-208/120V ARTERIAL STREET LIGHT CONTROLLER AS PER DRAWING 880, AND 864. (1) 60A-2P UNDERPASS CONTROLLER, (1) 70a-1P FOR TRAFFIC CONTROLLER, (4) 50A (2P), (2) 30A-120V(1P), (1) 20A-120(1P) FOR FUTURE DIVVY

H1 = INSTALL 200A-208/120V STATE STREET LIGHT CONTROLLER AS PER DRAWING 880 AND 864. (6) 50A-2P, (6) 50A-1P, (2) 30A-120V(1P), (20) 20A-120V(1P) FOR BUS SHELTER

H2 = INSTALL 60A-208/120V STATE STREET SEASONAL RECEPTACLE CONTROLLER (18) 20A-1P

H3 = INSTALL UNDERPASS LIGHT CONTROLLER PER CDOT STANDARD DRAWING 861A

R = INSTALL 20A GFCI DUPLEX RECEPTACLE IN WEATHERPROOF ENCLOSURE. CONNECT TO STATE STREET SEASONAL RECEPTACLE CONTROLLER.

LAKE ST. KEY PLAN:

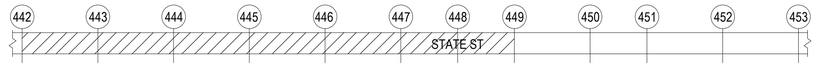

DESIGN BY:										
DRAWN BY:										
CHECKED BY:										
APPROVED BY:		4	7/3/2023	ISSUED FOR BID	JM	EM	SM			
CDOT/APPROVED BY:		NO.	DATE	REVISIONS	DES.	DRW.	CHK.	DCCO	CDOT	

TRANSYSTEMS
222 SOUTH RIVERSIDE PLAZA SUITE 610
CHICAGO, ILLINOIS 60606

SKIDMORE, OWINGS & MERRILL LLP
224 SOUTH MICHIGAN AVENUE, SUITE 1000
CHICAGO, ILLINOIS 60604

FACET ENGINEERING
4316 NORTH ELSTON AVENUE
CHICAGO, ILLINOIS 60641

CHICAGO DEPARTMENT OF TRANSPORTATION
DIVISION OF ENGINEERING

STATE / LAKE LOOP ELEVATED STATION
200 NORTH STATE STREET, CHICAGO, IL 60601

CDOT STREET UNDERPASS LIGHTING INSTALLATION PLAN - PART 1

CDOT PROJECT D-1-209 | DATE: 9/9/2022

SPEC. NO.

DRAWING NO. E-186A

REVISION NO. 1

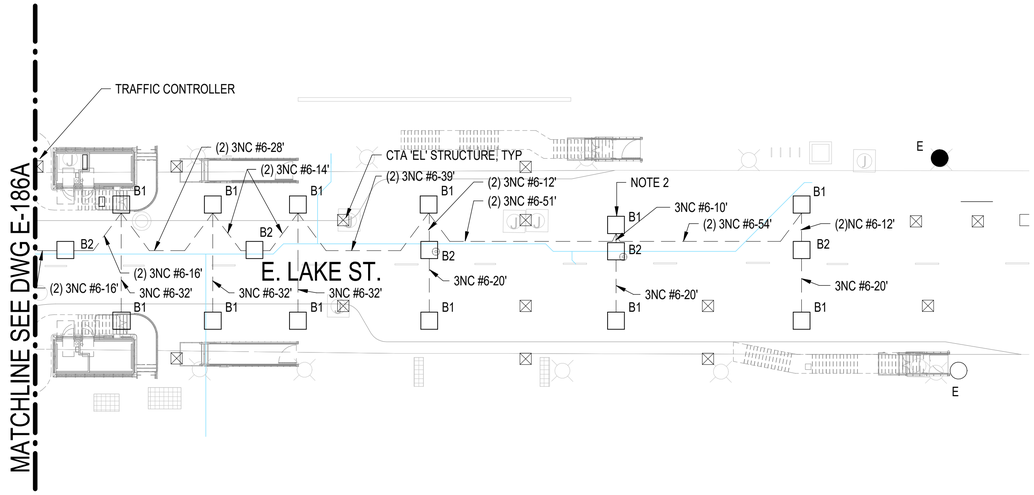

1 CDOT STREET - UNDERPASS LIGHTING INSTALLATION PLAN - PART 2

1" = 20'-0"

INSTALLATION OF STREET LIGHTING EQUIPMENT

A = INSTALL STREET LIGHTING CABLE 3TC (2 1/C #6 & 1/C #8) IN 2" CONDUIT.

B1 = INSTALL NEW LED UNDERPASS NEWSTAR LUMINAIRE MODEL NUMBER ADLLP-T2-WLR-C-MIC-W10-30-CHI, 100W LED WITH EL BRACKET SYSTEM. 20'-4" MOUNTING HEIGHT ATTACHED TO BOTTOM OF PLATFORM FLANGE. CONNECT TO CDOT SILVER SPRING SMART LIGHTING SYSTEM.

B2 = INSTALL NEW LED UNDERPASS NEWSTAR LUMINAIRE MODEL NUMBER ADLLP-T2-WLR-C-MIC-W10-30-CHI, 100W LED WITH EL BRACKET SYSTEM. 15'-8" MOUNTING HEIGHT ATTACHED TO BOTTOM OF TRACK STRINGER. CONNECT TO CDOT SILVER SPRING SMART LIGHTING SYSTEM.

E = EXISTING

H = INSTALL 200A-208/120V ARTERIAL STREET LIGHT CONTROLLER AS PER DRAWING 880, AND 864. (1) 60A-2P UNDERPASS CONTROLLER, (1) 70a-1P FOR TRAFFIC CONTROLLER, (4) 50A (2P), (2) 30A-120V(1P), (1) 20A-120(1P) FOR FUTURE DIVVY

H1 = INSTALL 200A-208/120V STATE STREET LIGHT CONTROLLER AS PER DRAWING 880 AND 864. (6) 50A-2P, (6) 50A-1P, (2) 30A-120V(1P), (20) 20A-120V(1P) FOR BUS SHELTER

H2 = INSTALL 60A-208/120V STATE STREET SEASONAL RECEPTACLE CONTROLLER (18) 20A-1P

H3 = INSTALL UNDERPASS LIGHT CONTROLLER PER CDOT STANDARD DRAWING 861A

R = INSTALL 20A GFCI DUPLEX RECEPTACLE IN WEATHERPROOF ENCLOSURE. CONNECT TO STATE STREET SEASONAL RECEPTACLE CONTROLLER.

NOTES:

1. REFER TO DRAWING E-186A FOR LEGEND, SHEET GENERAL NOTES AND INSTALLATION OF STREET LIGHTING NOTES.
2. MOUNT CDOT UNDERPASS LIGHT FIXTURE TO ELECTRICAL ROOM STRUCTURAL BEAM. ALIGN BOTTOM OF LIGHT FIXTURE TO BE AT THE SAME ELEVATION AS THE LOWEST TRACK STRUCTURE FLANGE.

LAKE ST. KEY PLAN:

DESIGN BY:										
DRAWN BY:										
CHECKED BY:										
APPROVED BY:		4	7/3/2023	ISSUED FOR BID	JM	EM	SM			
CDOT/APPROVED BY:		NO.	DATE	REVISIONS	DES.	DRW.	CHK.	DCCO	CDOT	

TRANSYSTEMS
222 SOUTH RIVERSIDE PLAZA SUITE 610
CHICAGO, ILLINOIS 60606

SKIDMORE, OWINGS & MERRILL LLP
224 SOUTH MICHIGAN AVENUE, SUITE 1000
CHICAGO, ILLINOIS 60604

FACET ENGINEERING
4316 NORTH ELSTON AVENUE
CHICAGO, ILLINOIS 60641

CHICAGO DEPARTMENT OF TRANSPORTATION
DIVISION OF ENGINEERING

STATE / LAKE LOOP ELEVATED STATION
200 NORTH STATE STREET, CHICAGO, IL 60601

CDOT STREET UNDERPASS LIGHTING INSTALLATION PLAN - PART 2

CDOT PROJECT D-1-209 | DATE: 9/9/2022

SPEC. NO.

DRAWING NO. E-186B

REVISION NO.1

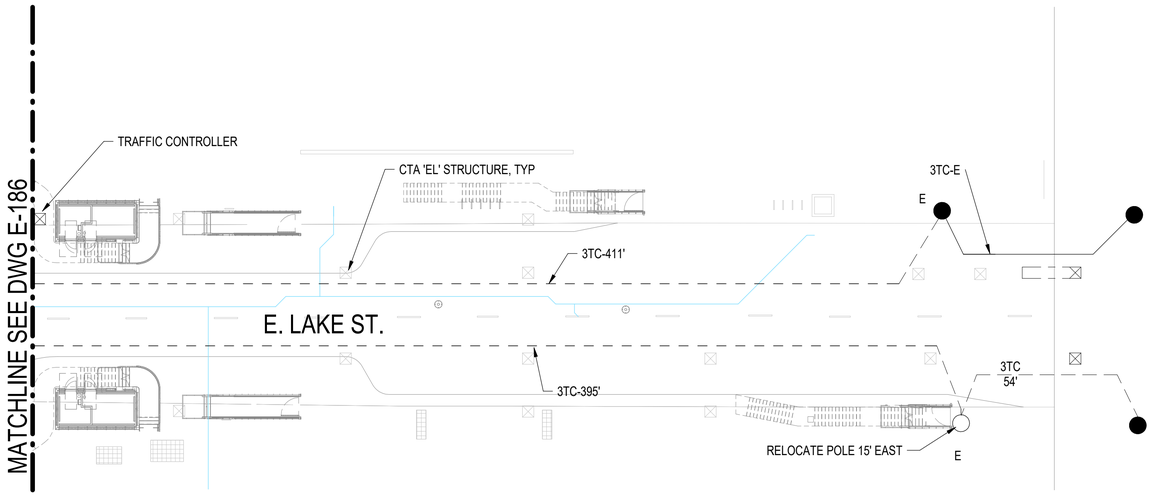

1 CDOT STREET - INSTALLATION PLAN - PART 2
NTS

INSTALLATION OF STREET LIGHTING EQUIPMENT

A = INSTALL STREET LIGHTING CABLE 3TC (2 1/C #6 & 1/C #8) IN 2" CONDUIT.

B1 = INSTALL NEW LED UNDERPASS NEWSTAR LUMINAIRE MODEL NUMBER ADLLP-T2-WLR-C-MIC-W10-30-CHI, 100W LED WITH EL BRACKET SYSTEM. 20'-4" MOUNTING HEIGHT ATTACHED TO BOTTOM OF PLATFORM FLANGE. CONNECT TO CDOT SILVER SPRING SMART LIGHTING SYSTEM.

B2 = INSTALL NEW LED UNDERPASS NEWSTAR LUMINAIRE MODEL NUMBER ADLLP-T2-WLR-C-MIC-W10-30-CHI, 100W LED WITH EL BRACKET SYSTEM. 15'-8" MOUNTING HEIGHT ATTACHED TO BOTTOM OF TRACK STRINGER. CONNECT TO CDOT SILVER SPRING SMART LIGHTING SYSTEM.

E = EXISTING

H = INSTALL 200A-208/120V ARTERIAL STREET LIGHT CONTROLLER AS PER DRAWING 880, AND 864. (1) 60A-2P UNDERPASS CONTROLLER, (1) 70a-1P FOR TRAFFIC CONTROLLER, (4) 50A (2P), (2) 30A-120V(1P), (1) 20A-120(1P) FOR FUTURE DIVVY

H1 = INSTALL 200A-208/120V STATE STREET LIGHT CONTROLLER AS PER DRAWING 880 AND 864. (6) 50A-2P, (6) 50A-1P, (2) 30A-120V(1P), (20) 20A-120V(1P) FOR BUS SHELTER

H2 = INSTALL 60A-208/120V STATE STREET SEASONAL RECEPTACLE CONTROLLER (18) 20A-1P

H3 = INSTALL UNDERPASS LIGHT CONTROLLER PER CDOT STANDARD DRAWING 861A

R = INSTALL 20A GFCI DUPLEX RECEPTACLE IN WEATHERPROOF ENCLOSURE. CONNECT TO STATE STREET SEASONAL RECEPTACLE CONTROLLER.

NOTES:

1. REFER TO DRAWING E-186 FOR LEGEND, SHEET GENERAL NOTES AND INSTALLATION OF STREET LIGHTING NOTES.

ATLAS NO. P22 & Q22

LAKE ST. KEY PLAN:

DESIGN BY:										
DRAWN BY:										
CHECKED BY:										
APPROVED BY:		4	7/3/2023	ISSUED FOR BID	JM	EM	SM			
CDOT/APPROVED BY:		NO.	DATE	REVISIONS	DES.	DRW.	CHK.	DCCO	CDOT	

TRANSYSTEMS
222 SOUTH RIVERSIDE PLAZA SUITE 610
CHICAGO, ILLINOIS 60606

SKIDMORE, OWINGS & MERRILL LLP
224 SOUTH MICHIGAN AVENUE, SUITE 1000
CHICAGO, ILLINOIS 60604

FACET ENGINEERING
4316 NORTH ELSTON AVENUE
CHICAGO, ILLINOIS 60641

CHICAGO DEPARTMENT OF TRANSPORTATION
DIVISION OF ENGINEERING

STATE / LAKE LOOP ELEVATED STATION
200 NORTH STATE STREET, CHICAGO, IL 60601

SPEC. NO.

CDOT STREET LIGHTING INSTALLATION PLAN - PART 2

DRAWING NO.
E-187

CDOT PROJECT D-1-209

DATE: 9/9/2022

REVISION NO.

NOTES:

1. SEE DRAWING E-001 FOR ELECTRICAL SYMBOL LIST.
2. SEE DRAWING E-002 FOR ELECTRICAL GENERAL NOTES AND ABBREVIATIONS.
3. SEE DRAWING E-612 ELECTRICAL EQUIPMENT SCHEDULE FOR CONDUIT AND WIRING REQUIREMENTS.
4. SEE DRAWING E-614 THROUGH E-621 FOR PANELBOARD SCHEDULES.
5. SEE DRAWING E-611 FOR CABLE AND CONDUIT SCHEDULE.
6. SEE DRAWING E-601, E-602 AND E-603 FOR ELECTRICAL SINGLE LINE DIAGRAM.
7. FURNISH AND INSTALL EQUIPMENT DISCONNECT SWITCHES IN STRICT COMPLIANCE WITH CHICAGO ELECTRICAL CODE REQUIREMENTS. INCLUDE NAMEPLATE ON EACH ISCONNECT SWITCH WHICH STATES ID, VOLTAGE, PHASE, AMPERES AND NEMA TYPE.
8. FLOOR MOUNTED EQUIPMENT SHALL BE PROVIDED WITH 4" HIGH CONCRETE HOUSE KEEPING PAD EXTENDED 4" BEYOND EDGE OF EQUIMENT ENCLOSURE.
9. PROVIDE CTA SAFETY SIGNAGE ON EACH ENTRANCE DOOR AND EACH PANEL.
10. PROVIDE PANIC DOOR HARDWARE ON MAIN ELECTRICAL ROOM EXIT DOORS.

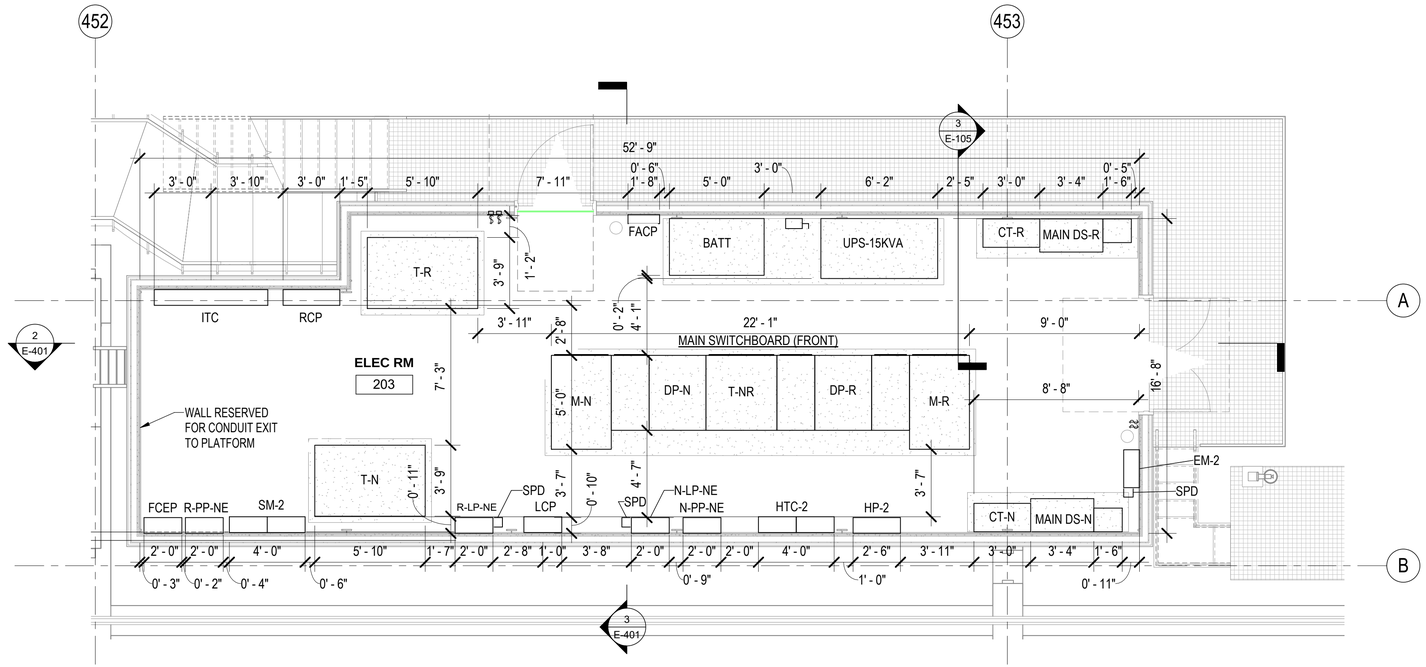

1 MAIN ELECTRICAL ROOM
1/4" = 1'-0"

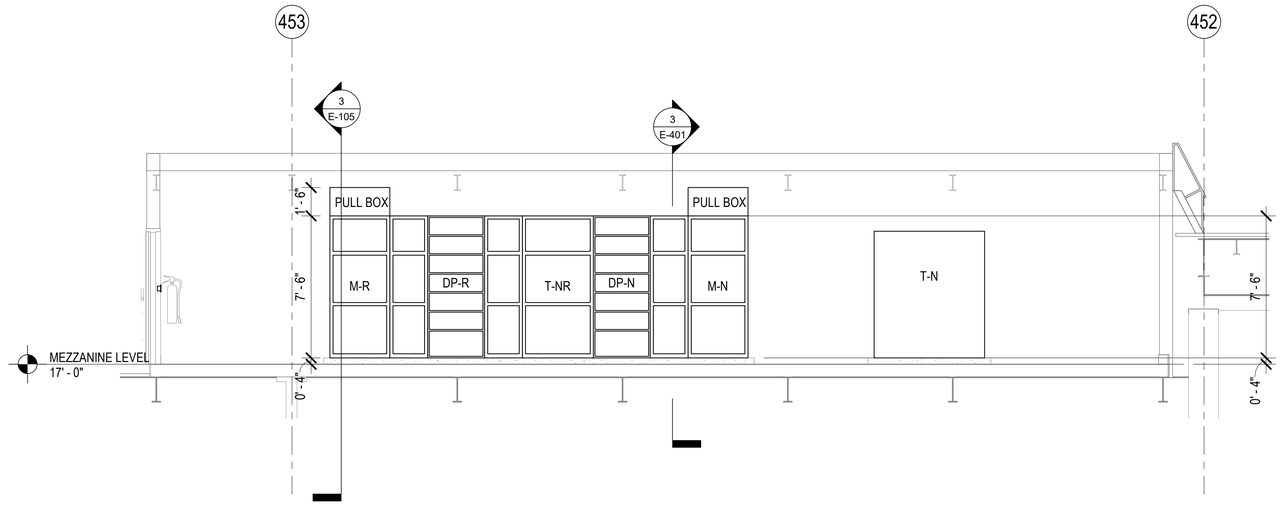

2 MAIN SWITCHBOARD ELEVATION
1/4" = 1'-0"

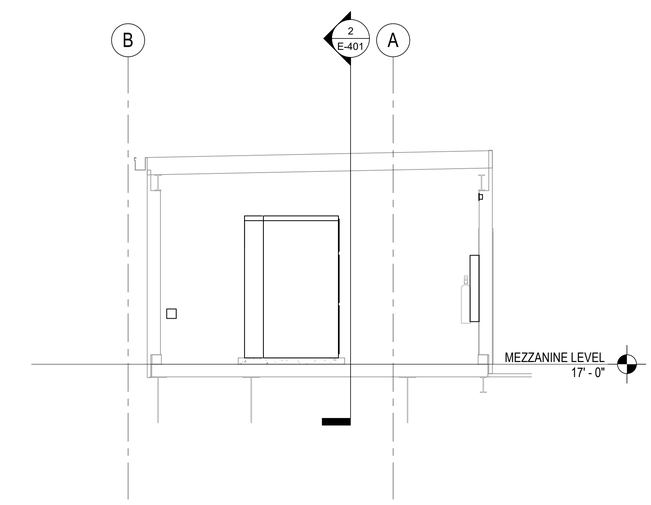

3 SECTION - MAIN ELECTRICAL ROOM
1/4" = 1'-0"

DESIGN BY:										
DRAWN BY:										
CHECKED BY:										
APPROVED BY:		4	7/3/2023	ISSUED FOR BID	JM	EM	OS			
CDOT/APPROVED BY:		NO.	DATE	REVISIONS	DES.	DRW.	CHK.	DCCO	CDOT	

TRANSYSTEMS
222 SOUTH RIVERSIDE PLAZA SUITE 610
CHICAGO, ILLINOIS 60606

SKIDMORE, OWINGS & MERRILL LLP
224 SOUTH MICHIGAN AVENUE, SUITE 1000
CHICAGO, ILLINOIS 60604

FACET ENGINEERING
4316 NORTH ELSTON AVENUE
CHICAGO, ILLINOIS 60641

CHICAGO DEPARTMENT OF TRANSPORTATION
DIVISION OF ENGINEERING

STATE / LAKE LOOP ELEVATED STATION
200 NORTH STATE STREET, CHICAGO, IL 60601

ENLARGED PLAN - MAIN ELECTRICAL ROOM

CDOT PROJECT D-1-209 | DATE: 9/9/2022

SPEC. NO.

DRAWING NO. E-401

REVISION NO.1

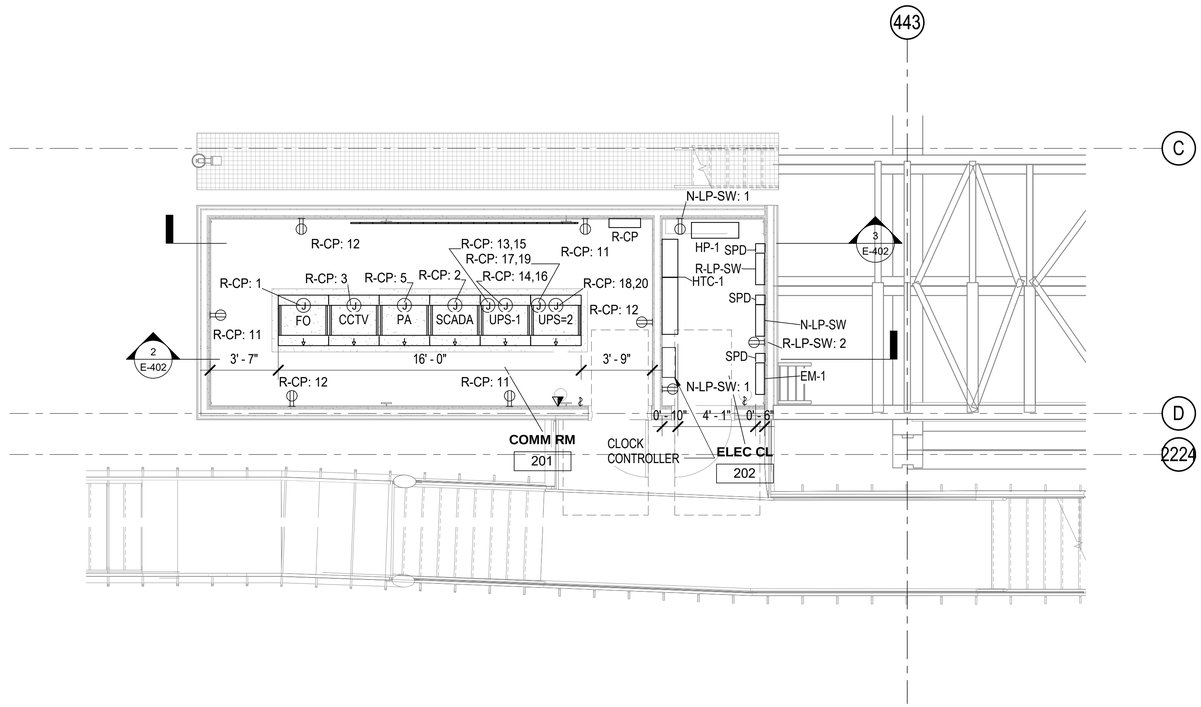

1 MAIN COMMUNICATION ROOM AND ELECTRICAL CLOSET

1/4" = 1'-0"

NOTES:

1. SEE DRAWING E-001 FOR ELECTRICAL SYMBOL LIST.
2. SEE DRAWING E-002 FOR ELECTRICAL GENERAL NOTES AND ABBREVIATIONS.
3. SEE DRAWING E-612 ELECTRICAL EQUIPMENT SCHEDULE FOR CONDUIT AND WIRING REQUIREMENTS.
4. SEE DRAWING E-614 THROUGH E-621 FOR PANELBOARD SCHEDULES.
5. SEE DRAWING E-611 FOR CABLE AND CONDUIT SCHEDULE.
6. SEE DRAWING E-601, E-602 AND E-603 FOR ELECTRICAL SINGLE LINE DIAGRAM.
7. FURNISH AND INSTALL EQUIPMENT DISCONNECT SWITCHES IN STRICT COMPLIANCE WITH CHICAGO ELECTRICAL CODE REQUIREMENTS. INCLUDE NAMEPLATE ON EACH ISCONNECT SWITCH WHICH STATES ID, VOLTAGE, PHASE, AMPERES AND NEMA TYPE.
8. FLOOR MOUNTED EQUIPMENT SHALL BE PROVIDED WITH 4" HIGH CONCRETE HOUSE KEEPING PAD EXTENDED 4" BEYOND EDGE OF EQUIMENT ENCLOSURE.
9. PROVIDE CTA SAFETY SIGNAGE ON EACH ENTRANCE DOOR AND EACH PANEL.
10. PROVIDE PANIC DOOR HARDWARE ON MAIN ELECTRICAL ROOM EXIT DOORS.

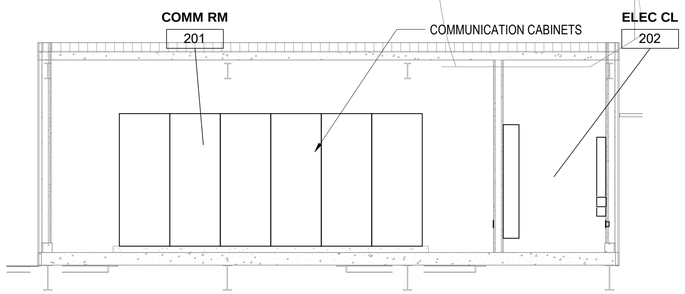

2 COMMUNICATION CABINETS ELEVATION

1/4" = 1'-0"

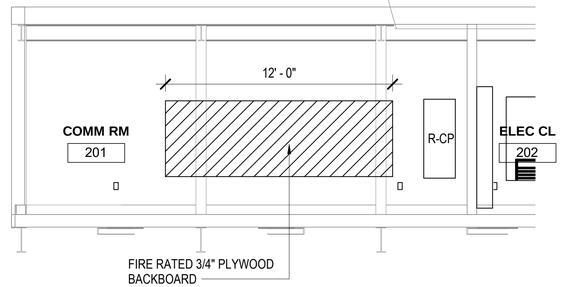

3 COMMUNICATIONS BACKBOARD ELEVATION

1/4" = 1'-0"

DESIGN BY:										
DRAWN BY:										
CHECKED BY:										
APPROVED BY:		4	7/3/2023	ISSUED FOR BID	JM	EM	OS			
CDOT/APPROVED BY:		NO.	DATE	REVISIONS	DES.	DRW.	CHK.	DCCO	CDOT	

TRANSYSTEMS
222 SOUTH RIVERSIDE PLAZA SUITE 610
CHICAGO, ILLINOIS 60606

SKIDMORE, OWINGS & MERRILL LLP
224 SOUTH MICHIGAN AVENUE, SUITE 1000
CHICAGO, ILLINOIS 60604

FACET ENGINEERING
4316 NORTH ELSTON AVENUE
CHICAGO, ILLINOIS 60641

CHICAGO DEPARTMENT OF TRANSPORTATION
DIVISION OF ENGINEERING

STATE / LAKE LOOP ELEVATED STATION
200 NORTH STATE STREET, CHICAGO, IL 60601

ENLARGED PLAN - COMMUNICATION ROOM AND ELECTRICAL CLOSETS

CDOT PROJECT D-1-209

DATE: 9/9/2022

SPEC. NO.

DRAWING NO. E-402

REVISION NO.

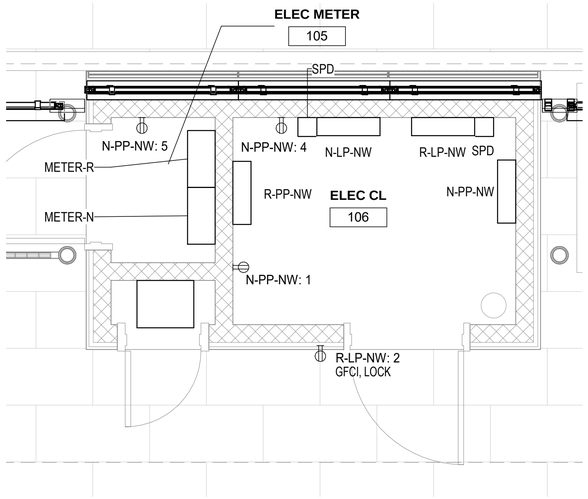

1 NW ELECTRICAL AND METER CLOSETS
1/2" = 1'-0"

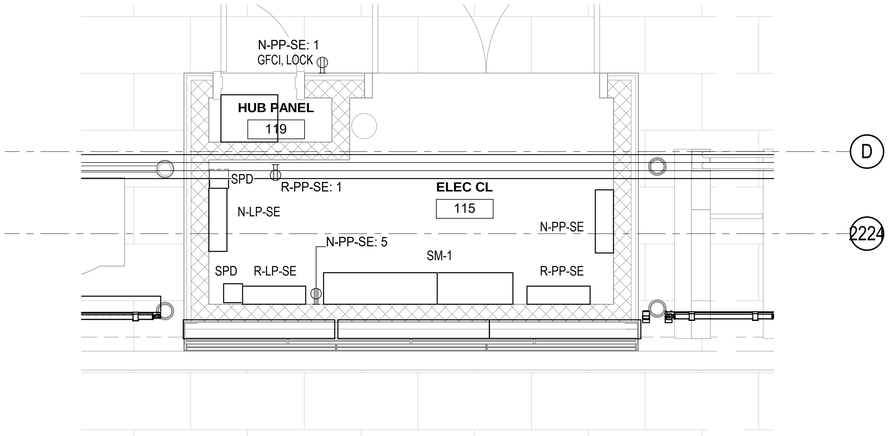

2 SE ELECTRICAL CLOSET
1/2" = 1'-0"

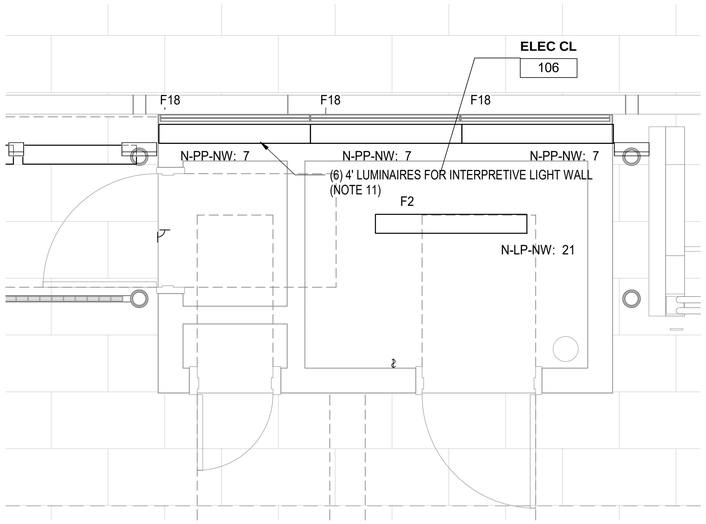

3 NW ELECTRICAL CLOSET LIGHTING PLAN
1/2" = 1'-0"

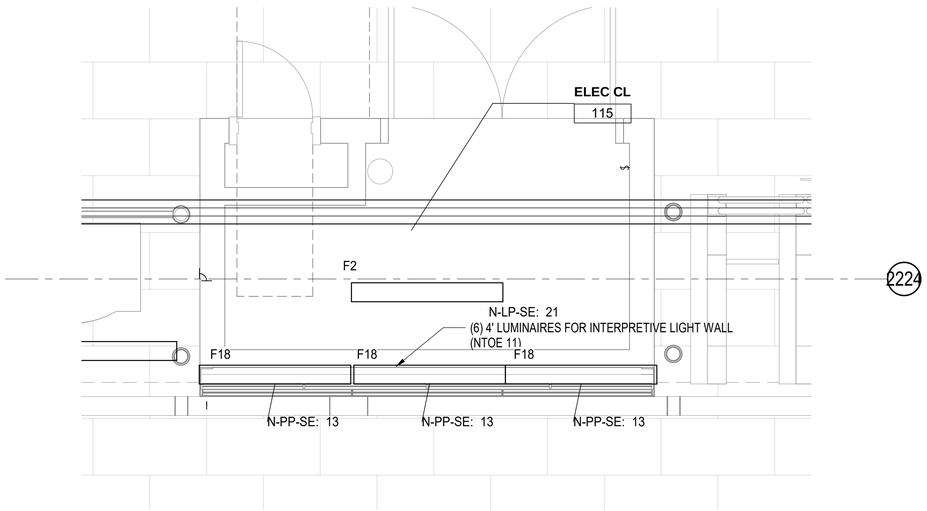

4 SE ELECTRICAL CLOSET LIGHTING PLAN
1/2" = 1'-0"

NOTES:

1. SEE DRAWING E-001 FOR ELECTRICAL SYMBOL LIST.
2. SEE DRAWING E-002 FOR ELECTRICAL GENERAL NOTES AND ABBREVIATIONS.
3. SEE DRAWING E-612 ELECTRICAL EQUIPMENT SCHEDULE FOR CONDUIT AND WIRING REQUIREMENTS.
4. SEE DRAWING E-614 THROUGH E-621 FOR PANELBOARD SCHEDULES.
5. SEE DRAWING E-611 FOR CABLE AND CONDUIT SCHEDULE.
6. SEE DRAWING E-601, E-602 AND E-603 FOR ELECTRICAL SINGLE LINE DIAGRAM.
7. FURNISH AND INSTALL EQUIPMENT DISCONNECT SWITCHES IN STRICT COMPLIANCE WITH CHICAGO ELECTRICAL CODE REQUIREMENTS. INCLUDE NAMEPLATE ON EACH ISCONNECT SWITCH WHICH STATES ID, VOLTAGE, PHASE, AMPERES AND NEMA TYPE.
8. FLOOR MOUNTED EQUIPMENT SHALL BE PROVIDED WITH 4" HIGH CONCRETE HOUSE KEEPING PAD EXTENDED 4" BEYOND EDGE OF EQUIMENT ENCLOSURE.
9. PROVIDE CTA SAFETY SIGNAGE ON EACH ENTRANCE DOOR AND EACH PANEL.
10. PROVIDE PANIC DOOR HARDWARE ON ELECTRICAL ROOM EXIT DOORS.
11. CONTRACTOR SHALL NOT ROUTE CONDUITS DIRECTLY UNDER AREA WHERE THE IMPERATIVE LIT WALL UNDER PLATFORM. CONDUITS SHALL BE DIVERTED TO ALLOW FOR UNDER PLATFORM ACCESS TO WALL AREA.

DESIGN BY:										
DRAWN BY:										
CHECKED BY:										
APPROVED BY:		4	7/3/2023	ISSUED FOR BID	JM	EM	OS			
CDOT/APPROVED BY:		NO.	DATE	REVISIONS	DES.	DRW.	CHK.	DCCO	CDOT	

TRANSYSTEMS
222 SOUTH RIVERSIDE PLAZA SUITE 610
CHICAGO, ILLINOIS 60606

SKIDMORE, OWINGS & MERRILL LLP
224 SOUTH MICHIGAN AVENUE, SUITE 1000
CHICAGO, ILLINOIS 60604

FACET ENGINEERING
4316 NORTH ELSTON AVENUE
CHICAGO, ILLINOIS 60641

CHICAGO DEPARTMENT OF TRANSPORTATION
DIVISION OF ENGINEERING

STATE / LAKE LOOP ELEVATED STATION
200 NORTH STATE STREET, CHICAGO, IL 60601

SPEC. NO.

ENLARGED PLAN - ELECTRICAL CLOSETS

DRAWING NO.
E-403

CDOT PROJECT D-1-209

DATE: 9/9/2022

REVISION NO.

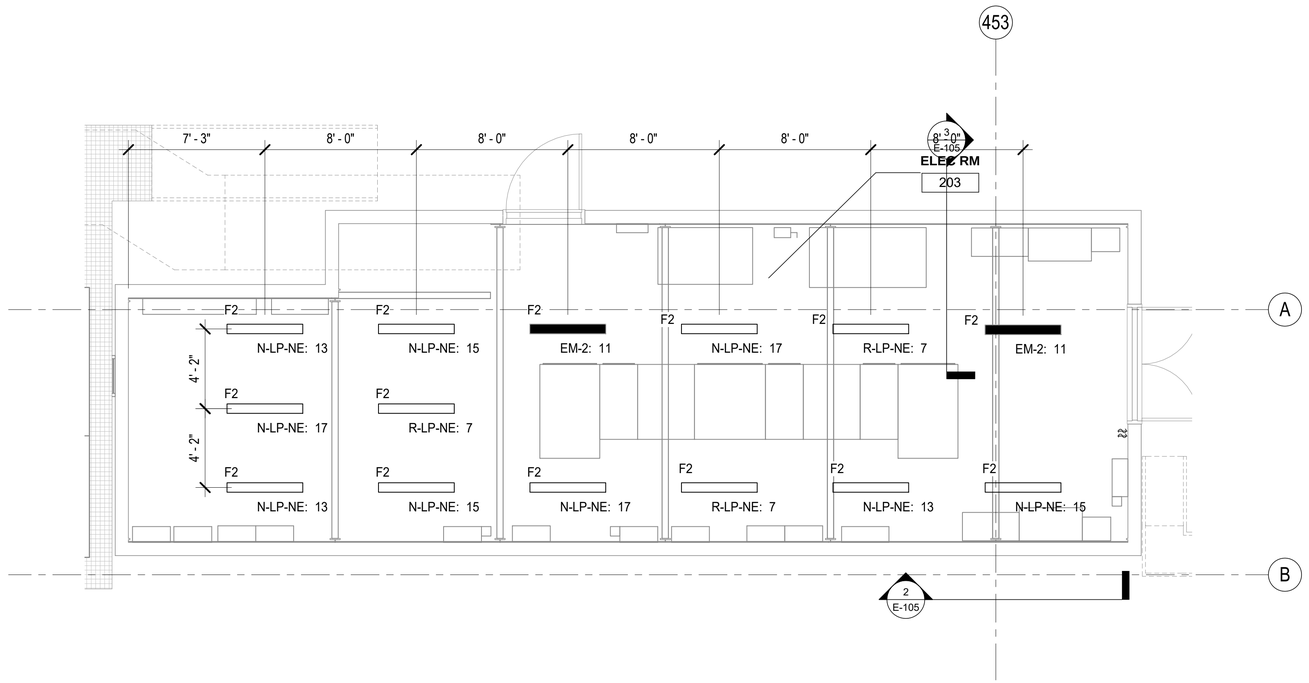

1 ENLARGED MAIN ELECTRICAL ROOM LIGHTING PLAN

1/4" = 1'-0"

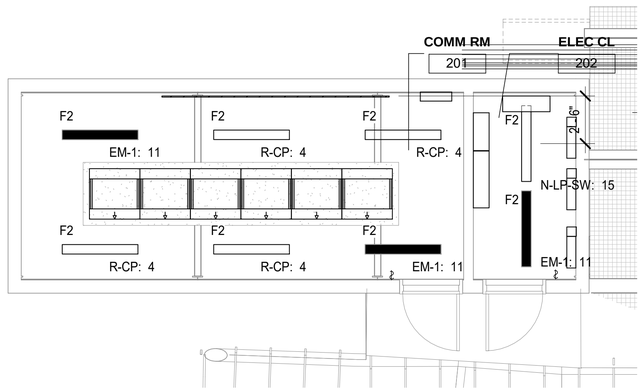

2 ENLARGED ELECTRICAL/COMM ROOM LIGHTING PLAN

1/4" = 1'-0"

NOTES:

1. SEE DRAWING E-001 FOR ELECTRICAL SYMBOL LIST.
2. SEE DRAWING E-002 FOR ELECTRICAL GENERAL NOTES AND ABBREVIATIONS.
3. MOUNT PHOTOCELL ON WEST WALL. ROUTE CONDUIT IN COMM RM TO BELOW PLATFORM TO LCP.
4. SEE DRAWING E-604 FOR LIGHTING FIXTURE SCHEDULE.

DESIGN BY:									
DRAWN BY:									
CHECKED BY:									
APPROVED BY:		4	7/3/2023	ISSUED FOR BID	JM	EM	OS		
CDOT/APPROVED BY:		NO.	DATE	REVISIONS	DES.	DRW.	CHK.	DCCO	CDOT

TRANSYSTEMS
222 SOUTH RIVERSIDE PLAZA SUITE 610
CHICAGO, ILLINOIS 60606

SKIDMORE, OWINGS & MERRILL LLP
224 SOUTH MICHIGAN AVENUE, SUITE 1000
CHICAGO, ILLINOIS 60604

FACET ENGINEERING
4316 NORTH ELSTON AVENUE
CHICAGO, ILLINOIS 60641

CHICAGO DEPARTMENT OF TRANSPORTATION
DIVISION OF ENGINEERING

STATE / LAKE LOOP ELEVATED STATION
200 NORTH STATE STREET, CHICAGO, IL 60601

ENLARGED PLAN - ELECTRICAL ROOM LIGHTING

CDOT PROJECT D-1-209

DATE: 9/9/2022

SPEC. NO.

DRAWING NO. E-404

REVISION NO.

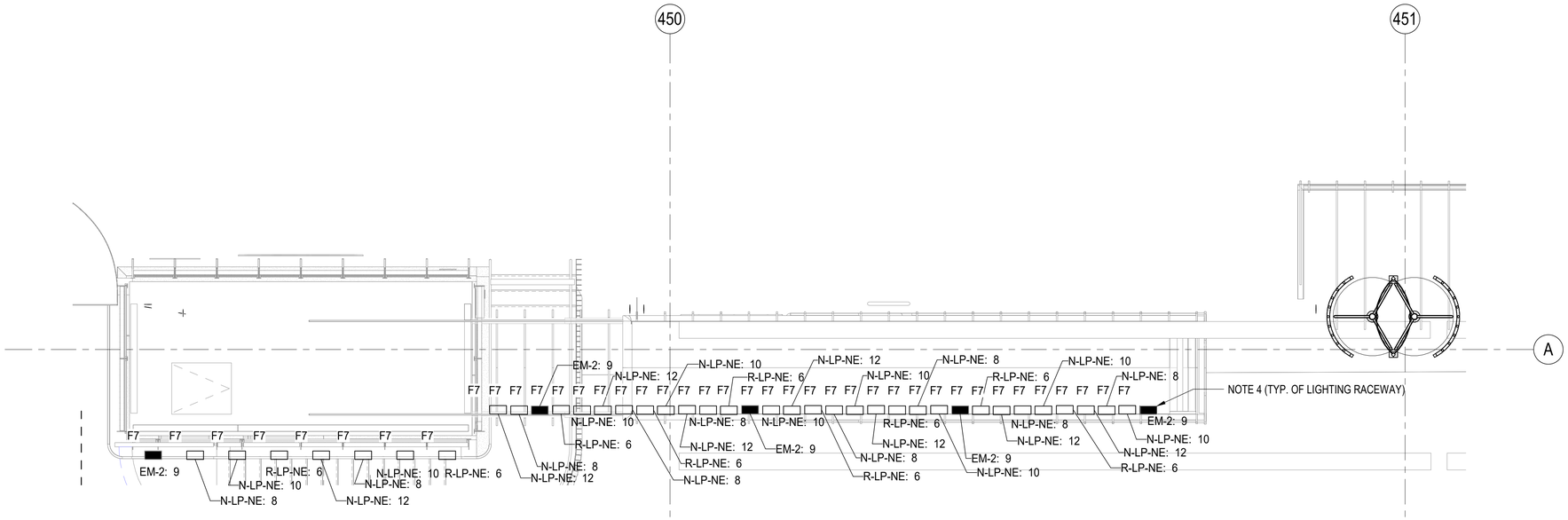

1 NORTH ESCALATOR LIGHTING PLAN

1/4" = 1'-0"

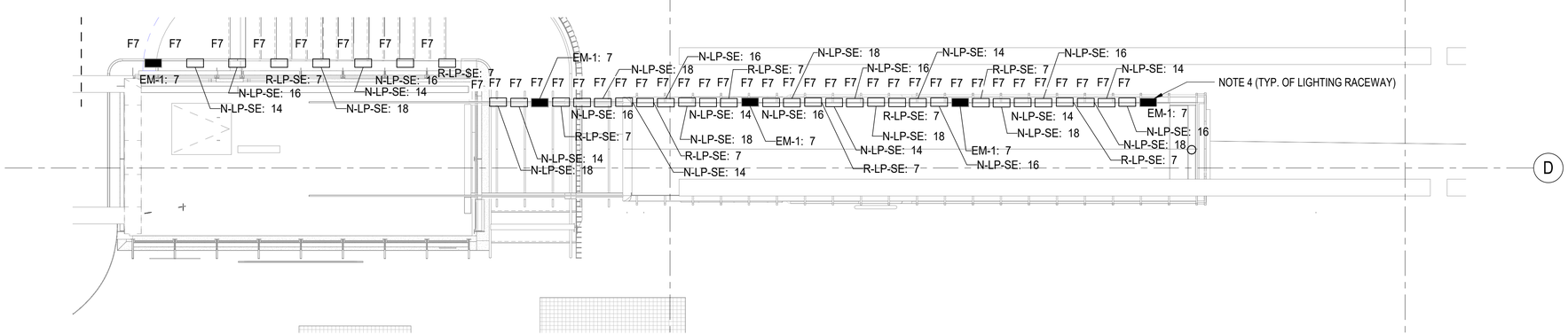

2 SOUTH ESCALATOR LIGHTING PLAN

1/4" = 1'-0"

NOTES:

1. SEE DRAWING E-001 FOR ELECTRICAL SYMBOL LIST.
2. SEE DRAWING E-002 FOR ELECTRICAL GENERAL NOTES AND ABBREVIATIONS.
3. SEE DRAWING E-604 FOR LIGHTING FIXTURE SCHEDULE.
4. REFER TO DETAIL 5 ON ARCH. DRAWING A-543 FOR LIGHTING AND CABLE TRAY INSTALLATION DETAIL.

DESIGN BY:									
DRAWN BY:									
CHECKED BY:									
APPROVED BY:		4	7/3/2023	ISSUED FOR BID	JM	EM	OS		
CDOT/APPROVED BY:		NO.	DATE	REVISIONS	DES.	DRW.	CHK.	DCCO	CDOT

TRANSYSTEMS
222 SOUTH RIVERSIDE PLAZA SUITE 610
CHICAGO, ILLINOIS 60606

SKIDMORE, OWINGS & MERRILL LLP
224 SOUTH MICHIGAN AVENUE, SUITE 1000
CHICAGO, ILLINOIS 60604

FACET ENGINEERING
4316 NORTH ELSTON AVENUE
CHICAGO, ILLINOIS 60641

CHICAGO DEPARTMENT OF TRANSPORTATION
DIVISION OF ENGINEERING

STATE / LAKE LOOP ELEVATED STATION
200 NORTH STATE STREET, CHICAGO, IL 60601

ENLARGED PLAN - ESCALATOR LIGHTING

CDOT PROJECT D-1-209

DATE: 9/9/2022

SPEC. NO.

DRAWING NO. E-406

REVISION NO.

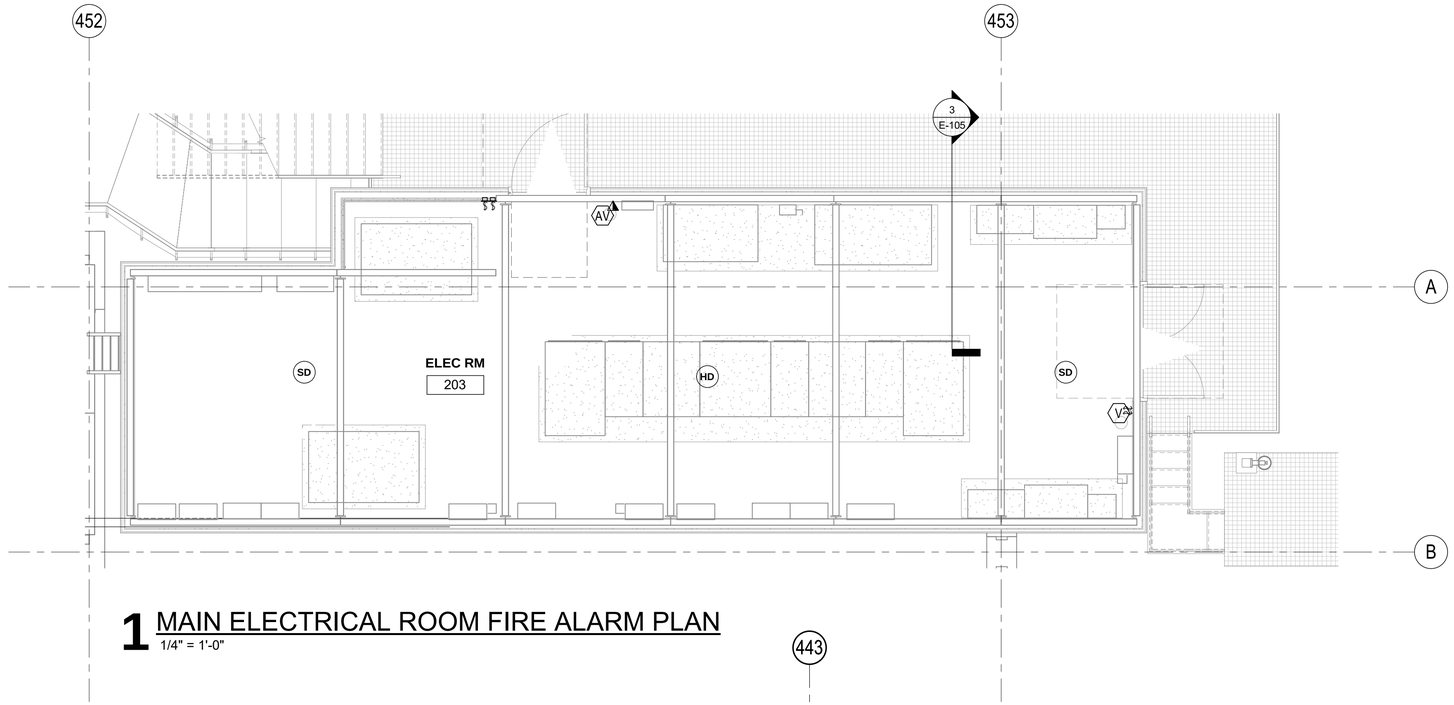

1 MAIN ELECTRICAL ROOM FIRE ALARM PLAN

1/4" = 1'-0"

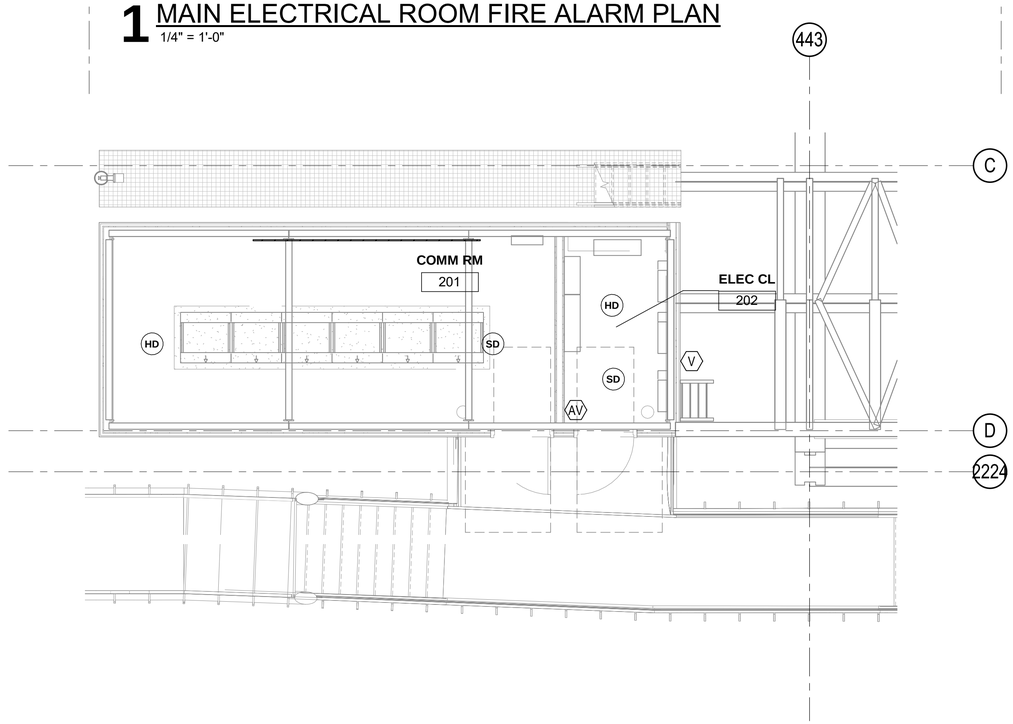

2 MAIN COMMUNICATION ROOM AND ELECTRICAL CLOSET FIRE ALARM PLAN

1/4" = 1'-0"

NOTES:

1. SEE DRAWING E-001 FOR ELECTRICAL SYMBOL LIST.
2. SEE DRAWING E-002 FOR ELECTRICAL GENERAL NOTES AND ABBREVIATIONS.
3. SEE DRAWING E-633 FIRE ALARM RISER DIAGRAM FOR CONDUIT AND WIRING REQUIREMENTS.

DESIGN BY:										
DRAWN BY:										
CHECKED BY:										
APPROVED BY:		4	7/3/2023	ISSUED FOR BID	EM	EM	JM			
CDOT/APPROVED BY:		NO.	DATE	REVISIONS	DES.	DRW.	CHK.	DCCO	CDOT	

TRANSYSTEMS
222 SOUTH RIVERSIDE PLAZA SUITE 610
CHICAGO, ILLINOIS 60606

SKIDMORE, OWINGS & MERRILL LLP
224 SOUTH MICHIGAN AVENUE, SUITE 1000
CHICAGO, ILLINOIS 60604

FACET ENGINEERING
4316 NORTH ELSTON AVENUE
CHICAGO, ILLINOIS 60641

CHICAGO DEPARTMENT OF TRANSPORTATION
DIVISION OF ENGINEERING

STATE / LAKE LOOP ELEVATED STATION
200 NORTH STATE STREET, CHICAGO, IL 60601

ENLARGED PLAN - ELECTRICAL AND COMMUNICATIONS ROOMS FIRE ALARM

CDOT PROJECT D-1-209 | DATE: 9/9/2022

SPEC. NO.

DRAWING NO. E-407

REVISION NO.

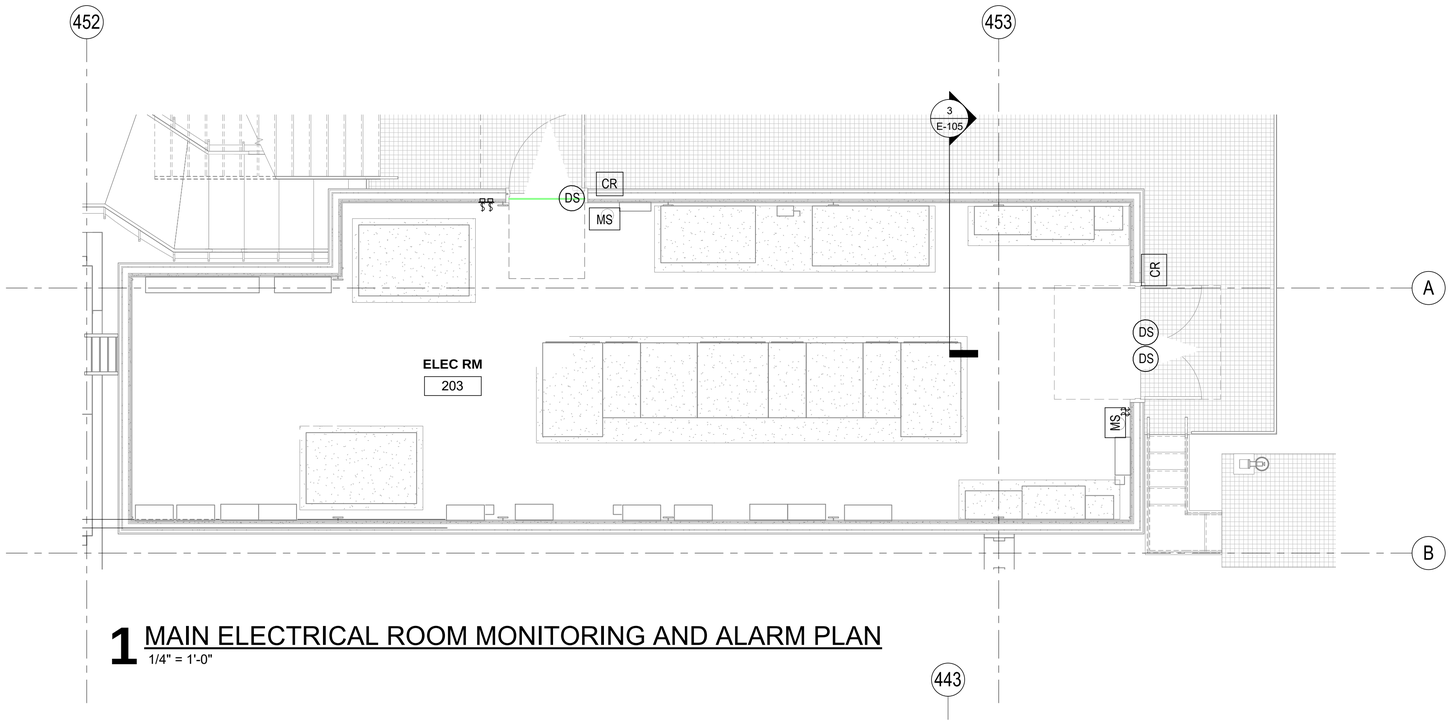

1 MAIN ELECTRICAL ROOM MONITORING AND ALARM PLAN
1/4" = 1'-0"

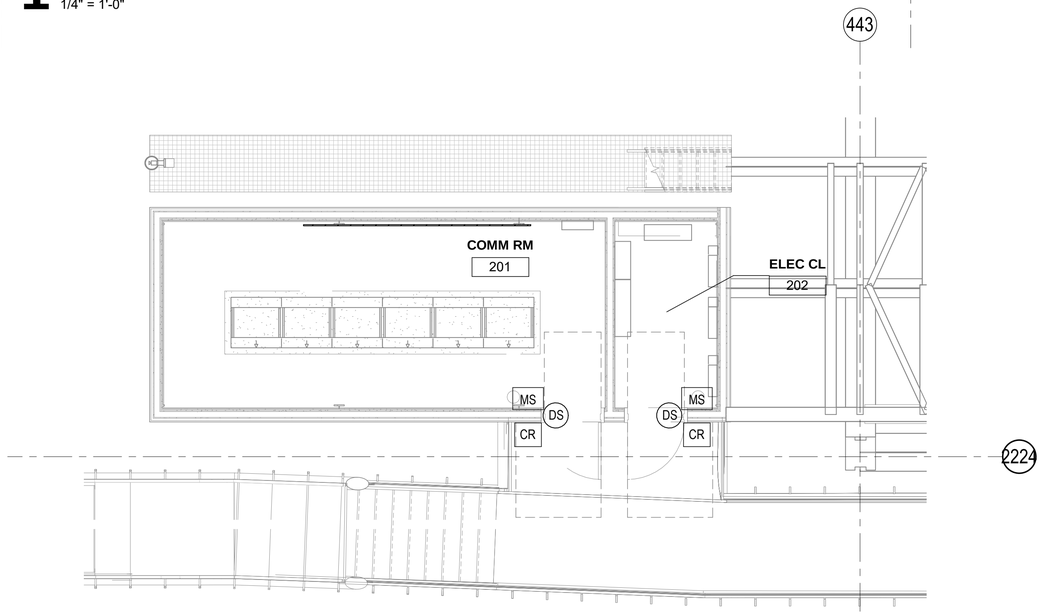

2 MAIN COMMUNICATION ROOM AND ELECTRICAL CLOSET MONITORING AND ALARM PLAN
1/4" = 1'-0"

1 2 3 4 5 6 7 8 9 10 11 12 13 14 15 16 17 18 19 20

NOTES:

1. SEE DRAWING E-001 FOR ELECTRICAL SYMBOL LIST.
2. SEE DRAWING E-002 FOR ELECTRICAL GENERAL NOTES AND ABBREVIATIONS.
3. SEE DRAWING E-632 MONITOR AND ALARM DIAGRAM FOR CONDUIT AND WIRING REQUIREMENTS.

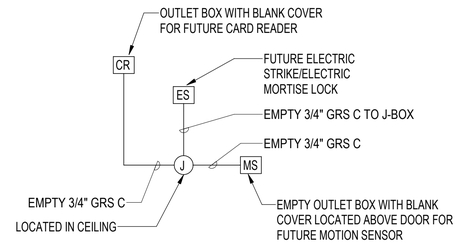

3 CARD READER DIAGRAM
1/8" = 1'-0"

DESIGN BY:										
DRAWN BY:										
CHECKED BY:										
APPROVED BY:		4	7/3/2023	ISSUED FOR BID	EM	EM	JM			
CDOT/APPROVED BY:		NO.	DATE	REVISIONS	DES.	DRW.	CHK.	DCCO	CDOT	

TRANSYSTEMS
222 SOUTH RIVERSIDE PLAZA SUITE 610
CHICAGO, ILLINOIS 60606

SKIDMORE, OWINGS & MERRILL LLP
224 SOUTH MICHIGAN AVENUE, SUITE 1000
CHICAGO, ILLINOIS 60604

FACET ENGINEERING
4316 NORTH ELSTON AVENUE
CHICAGO, ILLINOIS 60641

CHICAGO DEPARTMENT OF TRANSPORTATION
DIVISION OF ENGINEERING

STATE / LAKE LOOP ELEVATED STATION
200 NORTH STATE STREET, CHICAGO, IL 60601

SPEC. NO.

ENLARGED PLAN - ELECTRICAL AND COMMUNICATIONS ROOMS - MONITORING AND ALARM

DRAWING NO. E-408

CDOT PROJECT D-1-209 | DATE: 9/9/2022 | REVISION NO.

NOTES:

1. SEE DRAWING E-001 FOR ELECTRICAL SYMBOL LIST.
2. SEE DRAWING E-002 FOR ELECTRICAL GENERAL NOTES AND ABBREVIATIONS.
3. SEE DRAWING E-612 ELECTRICAL EQUIPMENT SCHEDULE FOR CONDUIT AND WIRING REQUIREMENTS.
4. SEE DRAWING E-614 THROUGH E-621 FOR PANELBOARD SCHEDULES.
5. SEE DRAWING E-611 FOR CABLE AND CONDUIT SCHEDULE.
6. FURNISH AND INSTALL EQUIPMENT DISCONNECT SWITCHES IN STRICT COMPLIANCE WITH CHICAGO ELECTRICAL CODE REQUIREMENTS. INCLUDE NAMEPLATE ON EACH ISCONNECT SWITCH WHICH STATES ID, VOLTAGE, PHASE, AMPERES AND NEMA TYPE.

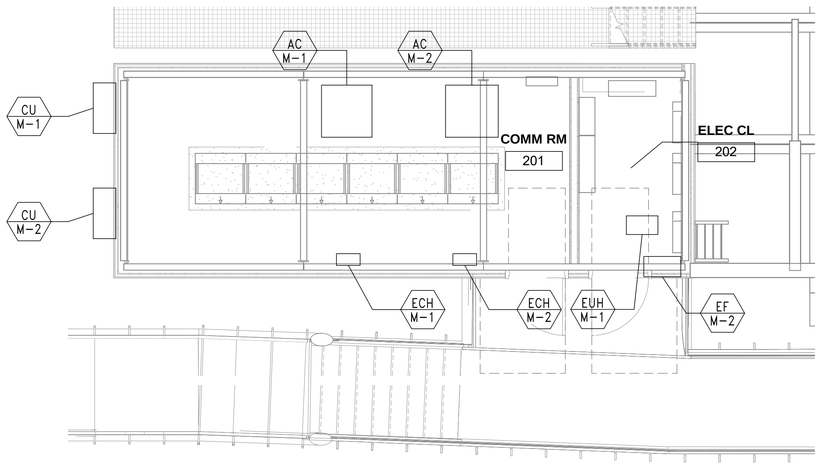

1 MAIN COMMUNICATION ROOM AND ELECTRICAL CLOSET EQUIPMENT PLAN
1/4" = 1'-0"

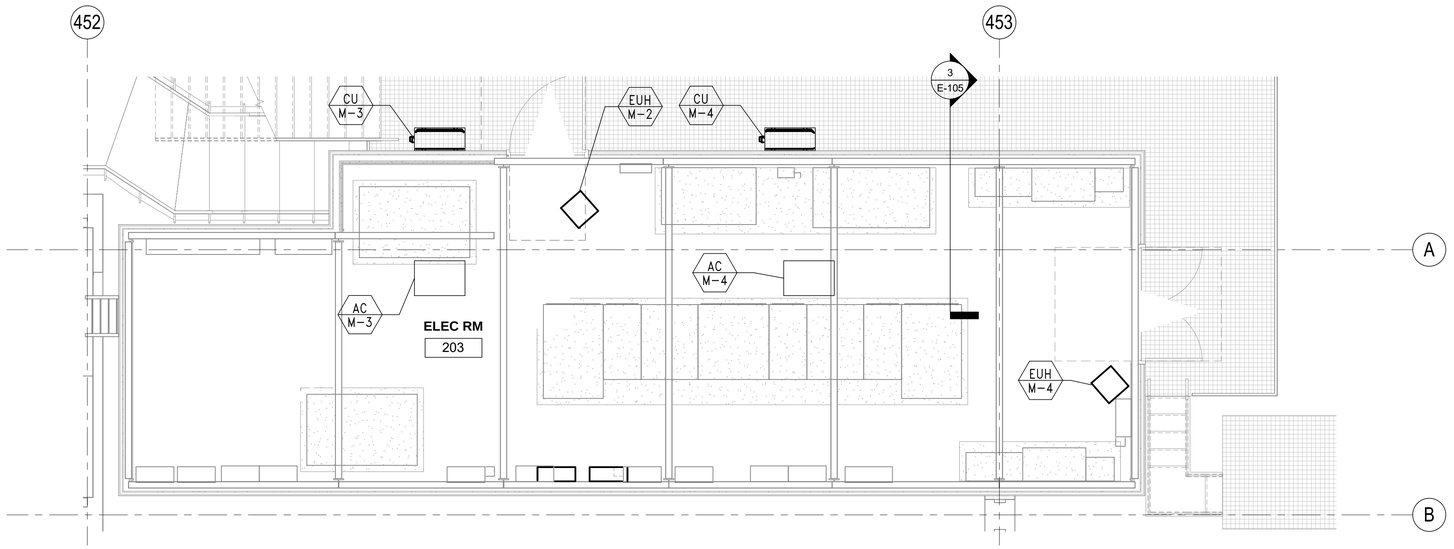

2 MAIN ELECTRICAL ROOM EQUIPMENT PLAN
1/4" = 1'-0"

DESIGN BY:										
DRAWN BY:										
CHECKED BY:										
APPROVED BY:		4	7/3/2023	ISSUED FOR BID	EM	EM	JM			
CDOT/APPROVED BY:		NO.	DATE	REVISIONS	DES.	DRW.	CHK.	DCCO	CDOT	

TRANSYSTEMS
222 SOUTH RIVERSIDE PLAZA SUITE 610
CHICAGO, ILLINOIS 60606

SKIDMORE, OWINGS & MERRILL LLP
224 SOUTH MICHIGAN AVENUE, SUITE 1000
CHICAGO, ILLINOIS 60604

FACET ENGINEERING
4316 NORTH ELSTON AVENUE
CHICAGO, ILLINOIS 60641

CHICAGO DEPARTMENT OF TRANSPORTATION
DIVISION OF ENGINEERING

STATE / LAKE LOOP ELEVATED STATION
200 NORTH STATE STREET, CHICAGO, IL 60601

ENLARGED PLAN - ELECTRICAL AND COMMUNICATIONS ROOMS - EQUIPMENT LAYOUT

CDOT PROJECT D-1-209

DATE: 9/9/2022

SPEC. NO.

DRAWING NO. E-409

REVISION NO.

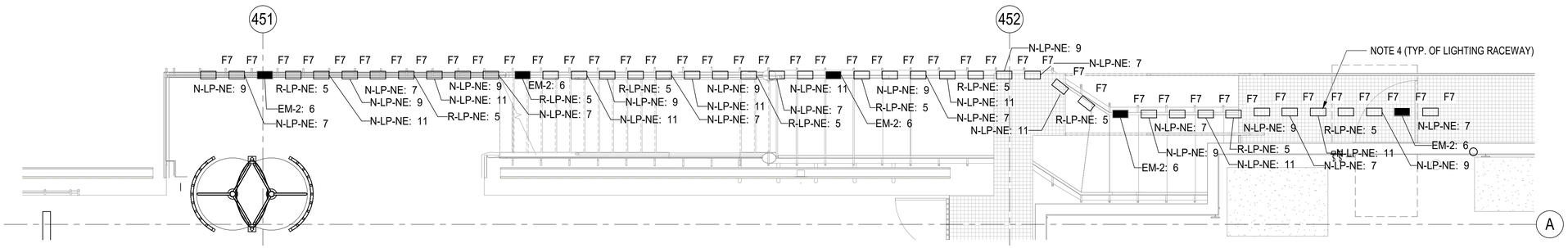

1 NE PLATFORM TO STREET STAIR
1/4" = 1'-0"

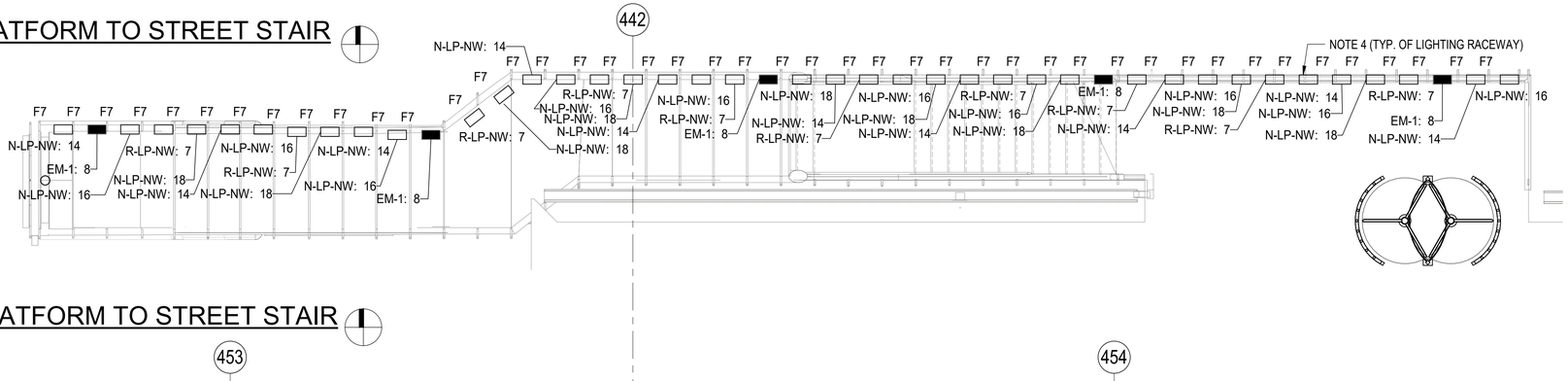

2 NW PLATFORM TO STREET STAIR
1/4" = 1'-0"

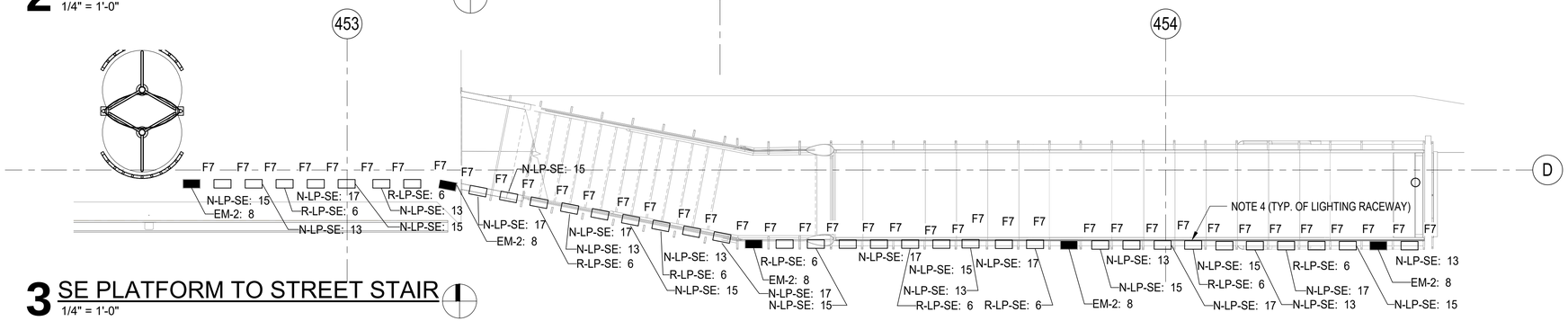

3 SE PLATFORM TO STREET STAIR
1/4" = 1'-0"

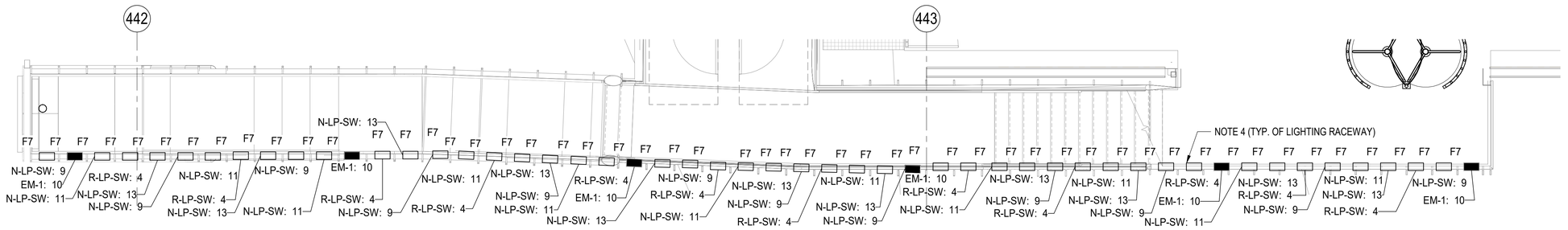

4 SW PLATFORM TO STREET STAIR
1/4" = 1'-0"

LAKE ST. KEY PLAN:

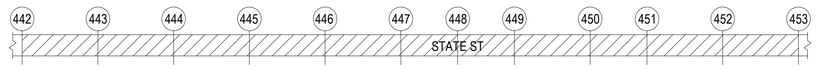

NOTES:

1. SEE DRAWING E-001 FOR ELECTRICAL SYMBOL LIST.
2. SEE DRAWING E-002 FOR ELECTRICAL GENERAL NOTES AND ABBREVIATIONS.
3. SEE DRAWING E-604 FOR LIGHTING FIXTURE SCHEDULE.
4. REFER TO DETAIL 5 ON ARCH. DRAWING A-543 FOR LIGHTING AND CABLE TRAY INSTALLATION DETAIL.

DESIGN BY:										
DRAWN BY:										
CHECKED BY:										
APPROVED BY:		4	7/3/2023	ISSUED FOR BID	EM	EM	JM			
CDOT/APPROVED BY:		NO.	DATE	REVISIONS	DES.	DRW.	CHK.	DCCO	CDOT	

TRANSYSTEMS
222 SOUTH RIVERSIDE PLAZA SUITE 610
CHICAGO, ILLINOIS 60606

SKIDMORE, OWINGS & MERRILL LLP
224 SOUTH MICHIGAN AVENUE, SUITE 1000
CHICAGO, ILLINOIS 60604

FACET ENGINEERING
4316 NORTH ELSTON AVENUE
CHICAGO, ILLINOIS 60641

CHICAGO DEPARTMENT OF TRANSPORTATION
DIVISION OF ENGINEERING

STATE / LAKE LOOP ELEVATED STATION
200 NORTH STATE STREET, CHICAGO, IL 60601

ENLARGED PLAN - PLATFORM TO STREET STAIR LIGHTING

SPEC. NO.

DRAWING NO. E-410

CDOT PROJECT D-1-209

DATE: 9/9/2022

REVISION NO.

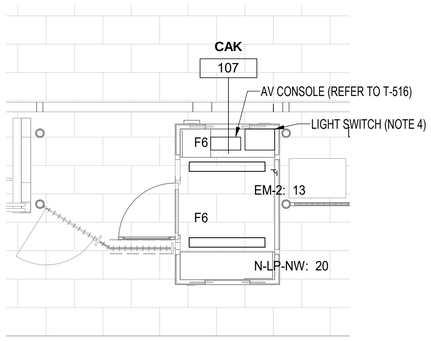

1 NORTH CAK LIGHTING PLAN
1/4" = 1'-0"

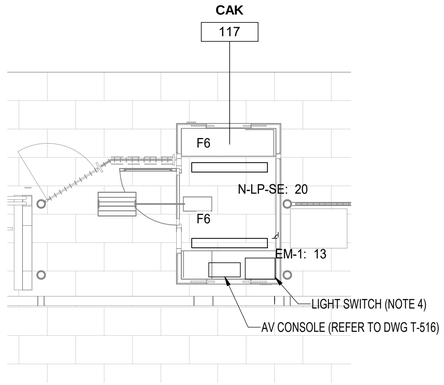

2 SOUTH CAK LIGHTING PLAN
1/4" = 1'-0"

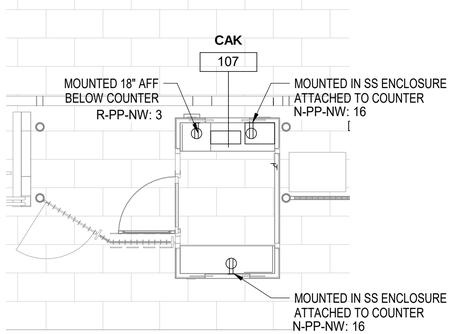

3 NORTH CAK POWER PLAN
1/4" = 1'-0"

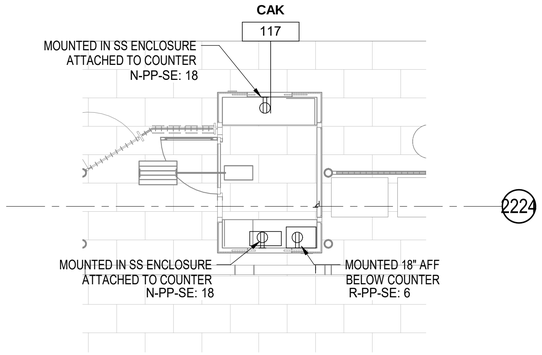

4 SOUTH CAK POWER PLAN
1/4" = 1'-0"

NOTES:

1. SEE DRAWING E-001 FOR ELECTRICAL SYMBOL LIST.
2. SEE DRAWING E-002 FOR ELECTRICAL GENERAL NOTES AND ABBREVIATIONS.
3. SEE DRAWING E-604 FOR LIGHTING FIXTURE SCHEDULE.
4. LIGHT SWITCH IS PART OF CAK CONTROL PANEL. E-509.
5. REFER TO THE COMMUNICATION DRAWINGS FOR ADDITIONAL CAK REQUIREMENTS.

LAKE ST. KEY PLAN:

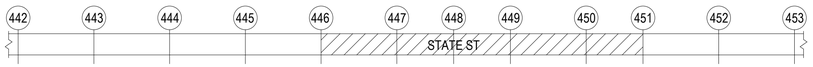

DESIGN BY:										
DRAWN BY:										
CHECKED BY:										
APPROVED BY:		4	7/3/2023	ISSUED FOR BID	EM	EM	JM			
CDOT/APPROVED BY:		NO.	DATE	REVISIONS	DES.	DRW.	CHK.	DCCO	CDOT	

TRANSYSTEMS
222 SOUTH RIVERSIDE PLAZA SUITE 610
CHICAGO, ILLINOIS 60606

SKIDMORE, OWINGS & MERRILL LLP
224 SOUTH MICHIGAN AVENUE, SUITE 1000
CHICAGO, ILLINOIS 60604

FACET ENGINEERING
4316 NORTH ELSTON AVENUE
CHICAGO, ILLINOIS 60641

CHICAGO DEPARTMENT OF TRANSPORTATION
DIVISION OF ENGINEERING

STATE / LAKE LOOP ELEVATED STATION
200 NORTH STATE STREET, CHICAGO, IL 60601

ENLARGED PLAN - CAK

CDOT PROJECT D-1-209

DATE: 9/9/2022

SPEC. NO.

DRAWING NO. E-411

REVISION NO.

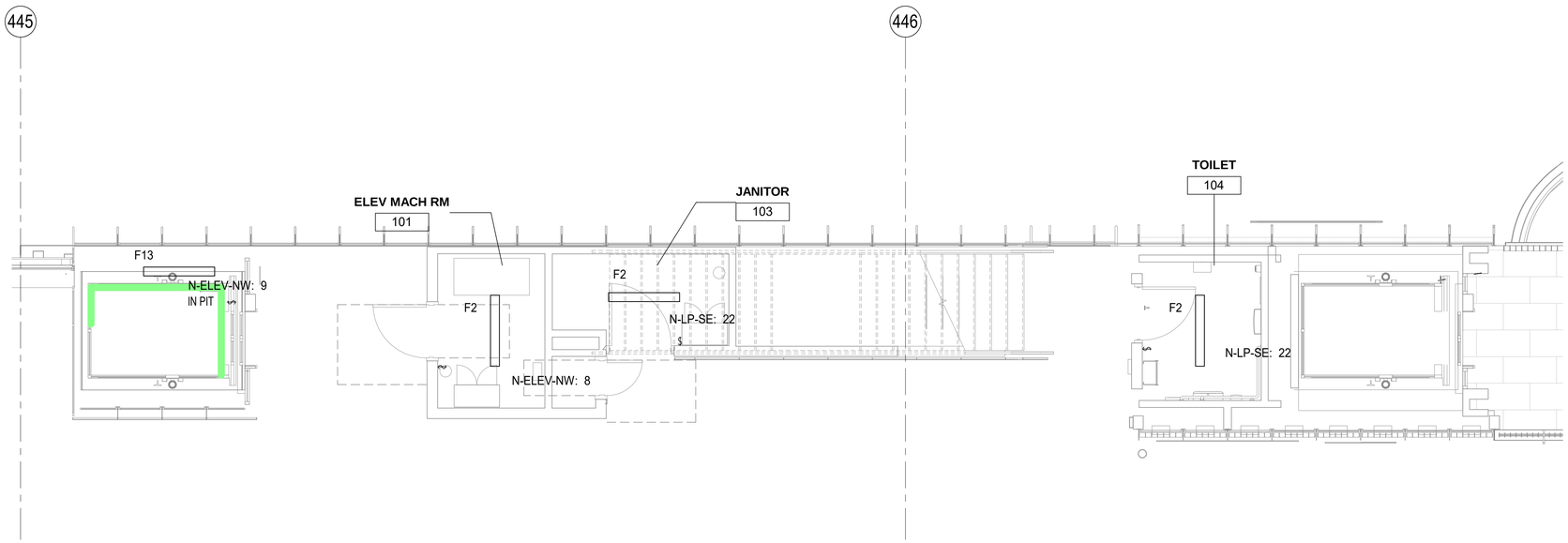

1 NW PLATFORM ROOM LIGHTING PLAN

1/4" = 1'-0"

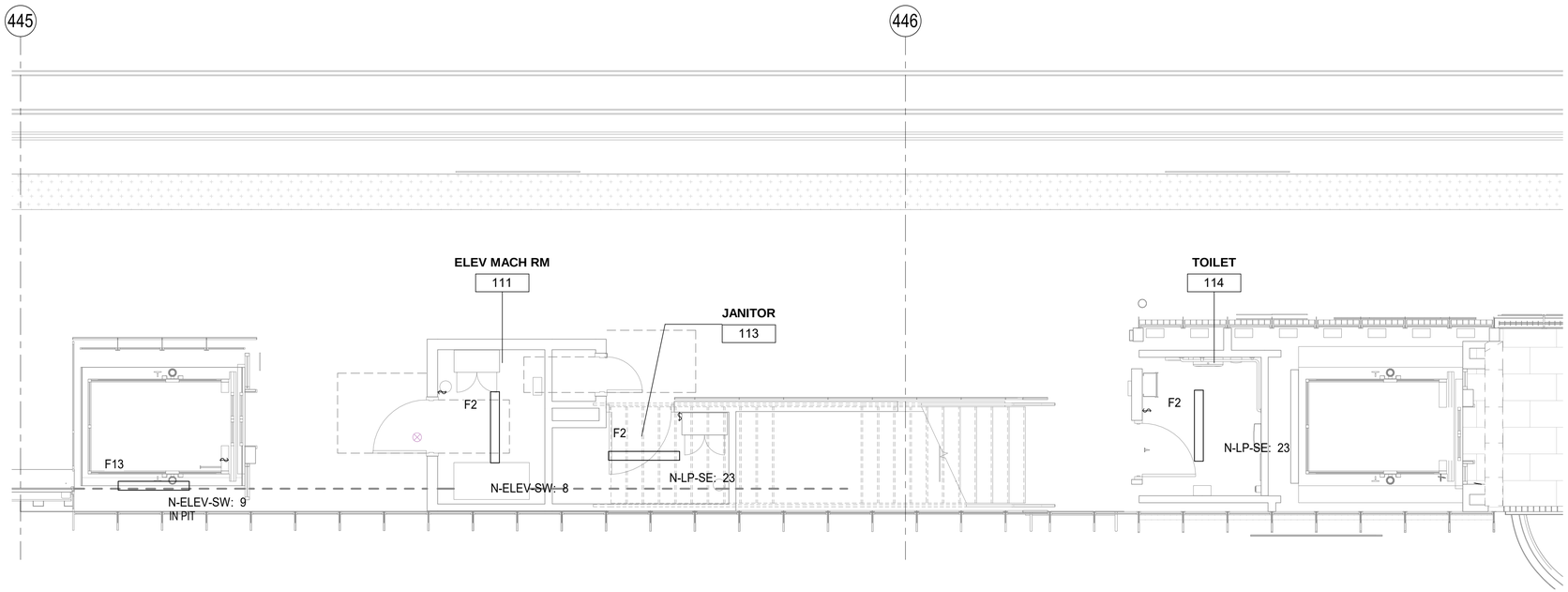

2 SW PLATFORM ROOM LIGHTING PLAN

1/4" = 1'-0"

NOTES:

1. SEE DRAWING E-001 FOR ELECTRICAL SYMBOL LIST.
2. SEE DRAWING E-002 FOR ELECTRICAL GENERAL NOTES AND ABBREVIATIONS.
3. SEE DRAWING E-604 FOR LIGHTING FIXTURE SCHEDULE.

LAKE ST. KEY PLAN:

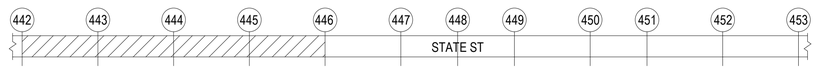

DESIGN BY:										
DRAWN BY:										
CHECKED BY:										
APPROVED BY:		4	7/3/2023	ISSUED FOR BID	Designe	Author	Checker			
CDOT/APPROVED BY:		NO.	DATE	REVISIONS	DES.	DRW.	CHK.	DCCO	CDOT	

TRANSYSTEMS
222 SOUTH RIVERSIDE PLAZA SUITE 610
CHICAGO, ILLINOIS 60606

SKIDMORE, OWINGS & MERRILL LLP
224 SOUTH MICHIGAN AVENUE, SUITE 1000
CHICAGO, ILLINOIS 60604

FACET ENGINEERING
4316 NORTH ELSTON AVENUE
CHICAGO, ILLINOIS 60641

CHICAGO DEPARTMENT OF TRANSPORTATION
DIVISION OF ENGINEERING

STATE / LAKE LOOP ELEVATED STATION
200 NORTH STATE STREET, CHICAGO, IL 60601

SPEC. NO.

ENLARGED PLAN - WEST PLATFORM ROOMS LIGHTING

DRAWING NO.
E-412

CDOT PROJECT D-1-209

DATE: 9/9/2022

REVISION NO.

1 NW CENTER STAIR
1/4" = 1'-0"

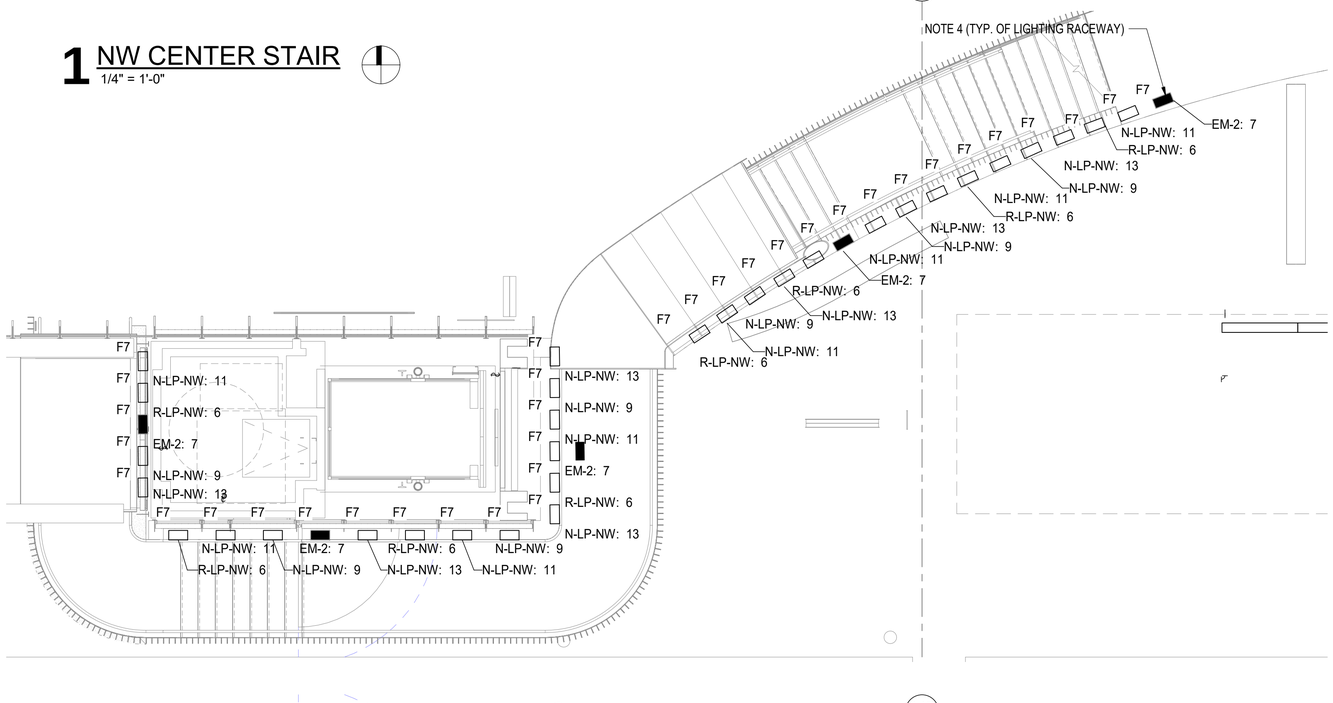

2 SW CENTER STAIR
1/4" = 1'-0"

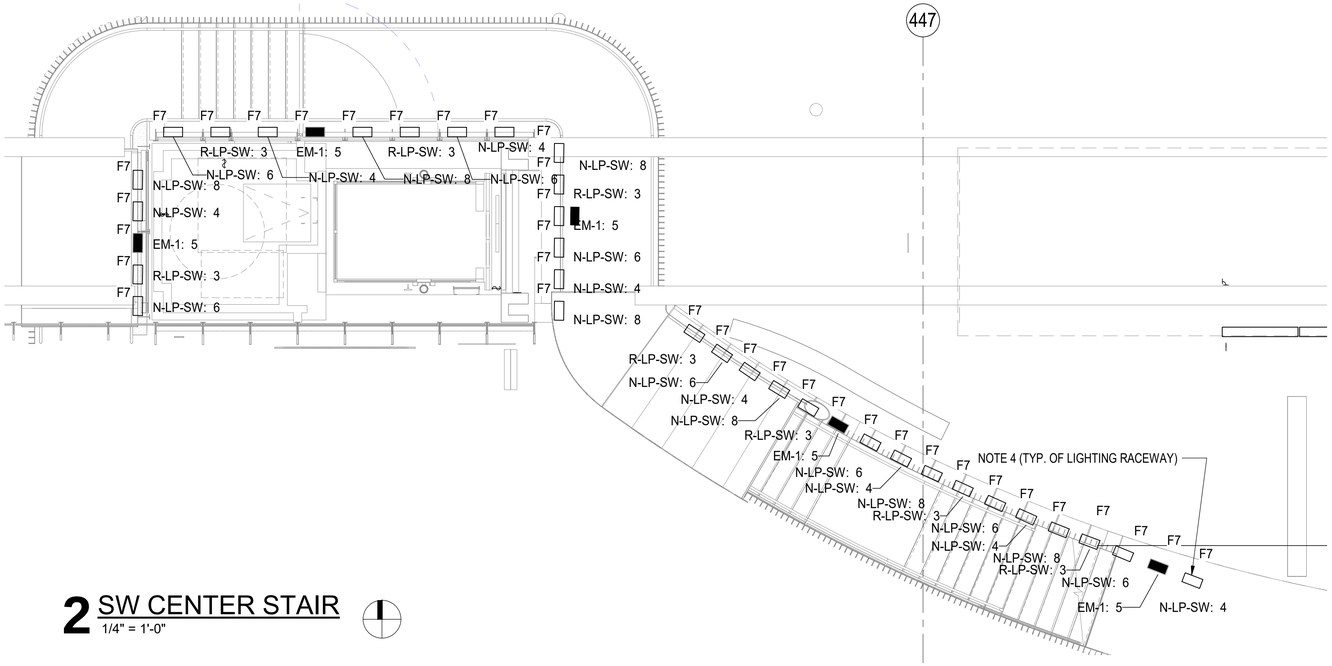

NOTES:

1. SEE DRAWING E-001 FOR ELECTRICAL SYMBOL LIST.
2. SEE DRAWING E-002 FOR ELECTRICAL GENERAL NOTES AND ABBREVIATIONS.
3. SEE DRAWING E-604 FOR LIGHTING FIXTURE SCHEDULE.
4. REFER TO DETAIL 5 ON ARCH. DRAWING A-541 FOR LIGHTING AND CABLE TRAY INSTALLATION DETAIL.

LAKE ST. KEY PLAN:

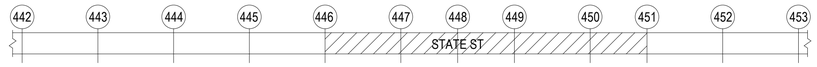

DESIGN BY:										
DRAWN BY:										
CHECKED BY:										
APPROVED BY:		4	7/3/2023	ISSUED FOR BID	JM	EM	OS			
CDOT/APPROVED BY:		NO.	DATE	REVISIONS	DES.	DRW.	CHK.	DCCO	CDOT	

TRANSYSTEMS
222 SOUTH RIVERSIDE PLAZA SUITE 610
CHICAGO, ILLINOIS 60606

SKIDMORE, OWINGS & MERRILL LLP
224 SOUTH MICHIGAN AVENUE, SUITE 1000
CHICAGO, ILLINOIS 60604

FACET ENGINEERING
4316 NORTH ELSTON AVENUE
CHICAGO, ILLINOIS 60641

CHICAGO DEPARTMENT OF TRANSPORTATION
DIVISION OF ENGINEERING

STATE / LAKE LOOP ELEVATED STATION
200 NORTH STATE STREET, CHICAGO, IL 60601

SPEC. NO.

ENLARGED PLAN - WEST CENTER STAIR LIGHTING

DRAWING NO.
E-413

CDOT PROJECT D-1-209

DATE: 9/9/2022

REVISION NO.

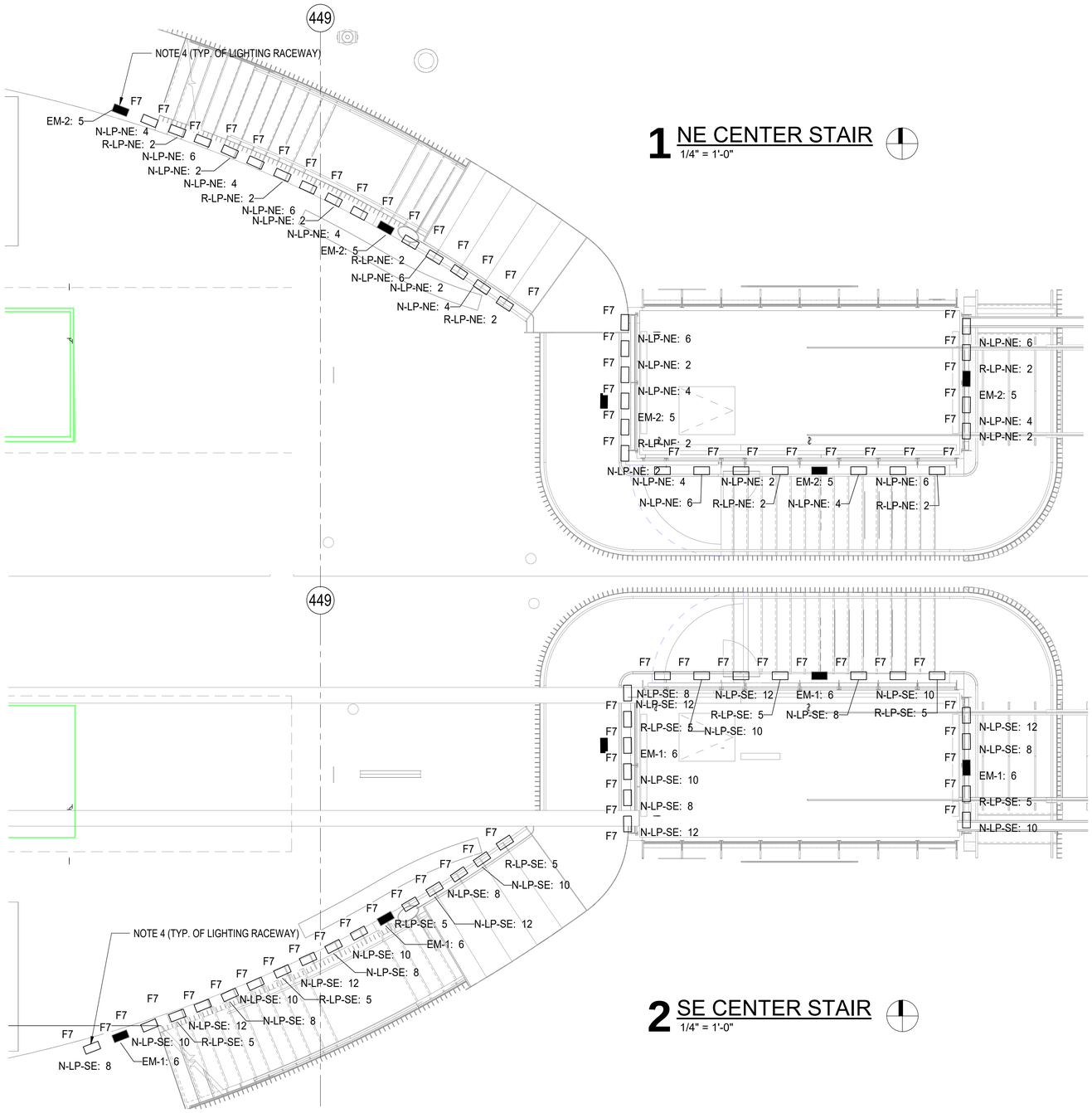

1 NE CENTER STAIR
1/4" = 1'-0"

2 SE CENTER STAIR
1/4" = 1'-0"

NOTES:

1. SEE DRAWING E-001 FOR ELECTRICAL SYMBOL LIST.
2. SEE DRAWING E-002 FOR ELECTRICAL GENERAL NOTES AND ABBREVIATIONS.
3. SEE DRAWING E-604 FOR LIGHTING FIXTURE SCHEDULE.
4. REFER TO DETAIL 5 ON ARCH. DRAWING A-541 FOR LIGHTING AND CABLE TRAY INSTALLATION DETAIL.

LAKE ST. KEY PLAN:

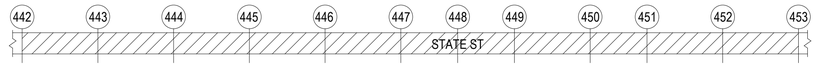

DESIGN BY:									
DRAWN BY:									
CHECKED BY:									
APPROVED BY:		4	7/3/2023	ISSUED FOR BID	EM	EM	JM		
CDOT/APPROVED BY:		NO.	DATE	REVISIONS	DES.	DRW.	CHK.	DCCO	CDOT

TRANSYSTEMS
222 SOUTH RIVERSIDE PLAZA SUITE 610
CHICAGO, ILLINOIS 60606

SKIDMORE, OWINGS & MERRILL LLP
224 SOUTH MICHIGAN AVENUE, SUITE 1000
CHICAGO, ILLINOIS 60604

FACET ENGINEERING
4316 NORTH ELSTON AVENUE
CHICAGO, ILLINOIS 60641

CHICAGO DEPARTMENT OF TRANSPORTATION
DIVISION OF ENGINEERING

STATE / LAKE LOOP ELEVATED STATION
200 NORTH STATE STREET, CHICAGO, IL 60601

ENLARGED PLAN - EAST CENTER STAIR LIGHTING

CDOT PROJECT D-1-209

DATE: 9/9/2022

SPEC. NO.

DRAWING NO. E-414

REVISION NO.

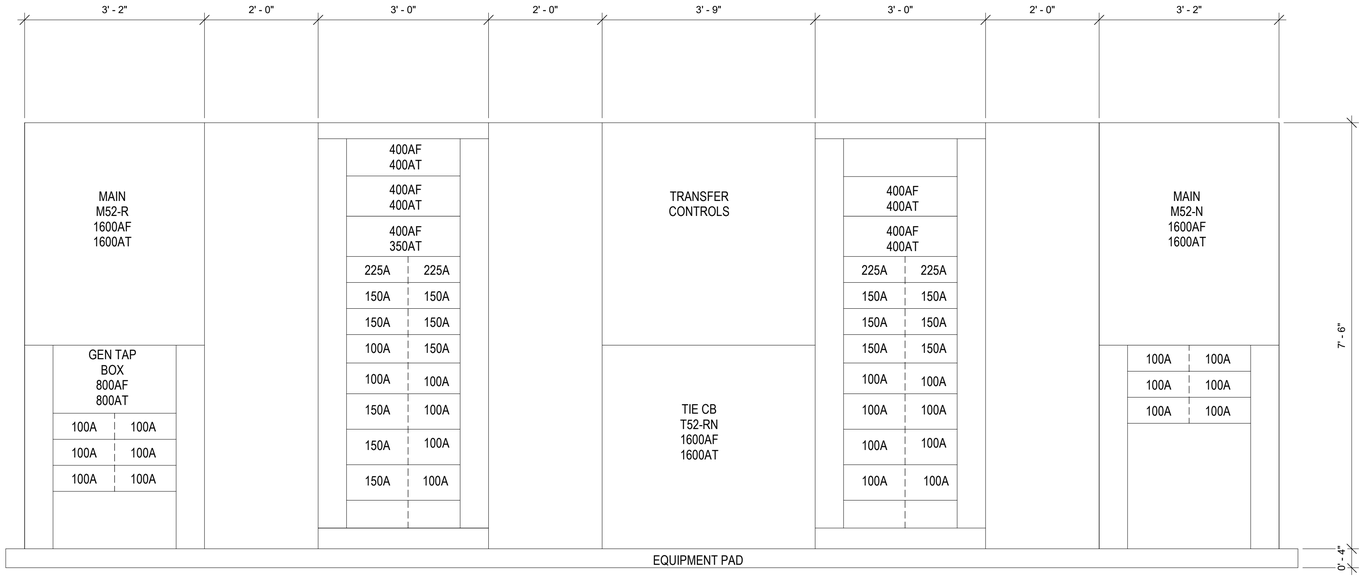

1 SWITCHBOARD SWBD FRONT ELEVATION
NTS

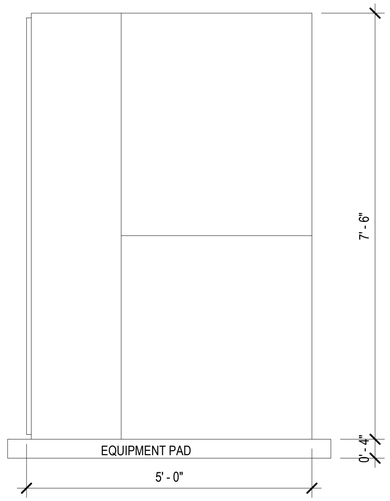

2 SWITCHBOARD SIDE ELEVATION
NTS

NOTES:

1. SEE DRAWING E-001 FOR ELECTRICAL SYMBOL LIST.
2. SEE DRAWING E-002 FOR ELECTRICAL GENERAL NOTES AND ABBREVIATIONS.

DESIGN BY:									
DRAWN BY:									
CHECKED BY:									
APPROVED BY:		4	7/3/2023	ISSUED FOR BID	JM	EM	OS		
CDOT/APPROVED BY:		NO.	DATE	REVISIONS	DES.	DRW.	CHK.	DCCO	CDOT

TRANSYSTEMS
222 SOUTH RIVERSIDE PLAZA SUITE 610
CHICAGO, ILLINOIS 60606

SKIDMORE, OWINGS & MERRILL LLP
224 SOUTH MICHIGAN AVENUE, SUITE 1000
CHICAGO, ILLINOIS 60604

FACET ENGINEERING
4316 NORTH ELSTON AVENUE
CHICAGO, ILLINOIS 60641

CHICAGO DEPARTMENT OF TRANSPORTATION
DIVISION OF ENGINEERING

STATE / LAKE LOOP ELEVATED STATION
200 NORTH STATE STREET, CHICAGO, IL 60601

DETAILS - SWITCHBOARD ELEVATIONS

CDOT PROJECT D-1-209 | DATE: 9/9/2022

SPEC. NO.

DRAWING NO. E-501

REVISION NO.

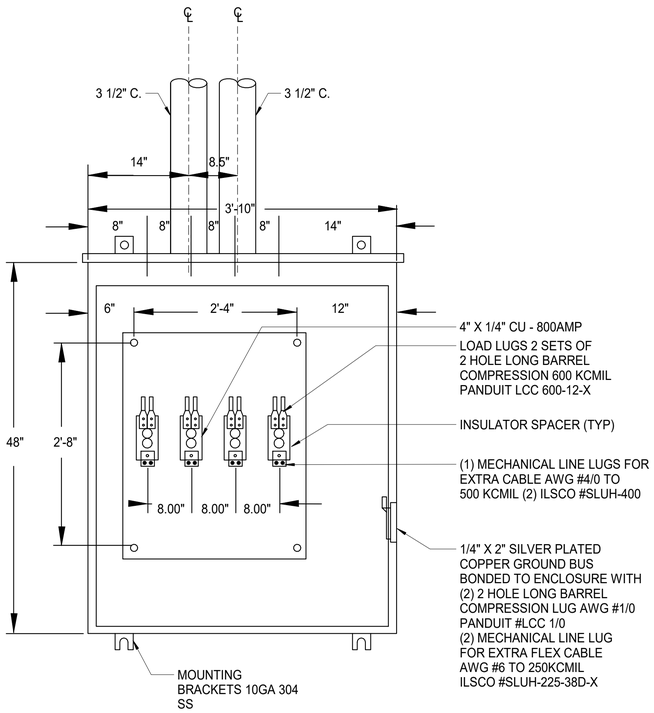

OPEN VIEW

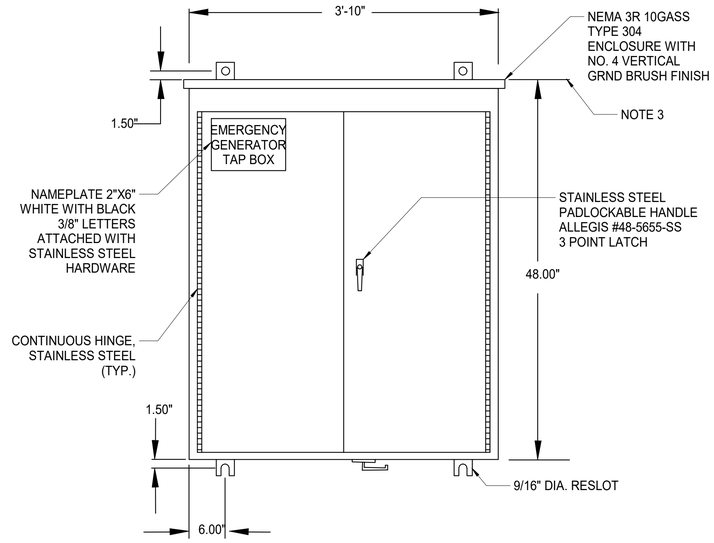

FRONT VIEW

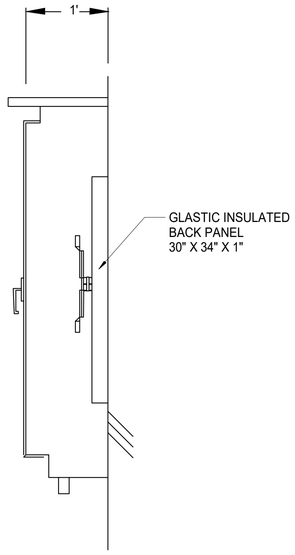

SECTION

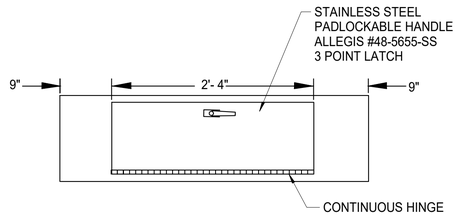

BOTTOM VIEW

1 PORTABLE GENERATOR TAP BOX DETAIL
NTS

DESIGN BY:										
DRAWN BY:										
CHECKED BY:										
APPROVED BY:		4	7/3/2023	ISSUED FOR BID	JM	EM	OS			
CDOT/APPROVED BY:		NO.	DATE	REVISIONS	DES.	DRW.	CHK.	DCCO	CDOT	

TRANSYSTEMS
222 SOUTH RIVERSIDE PLAZA SUITE 610
CHICAGO, ILLINOIS 60606

SKIDMORE, OWINGS & MERRILL LLP
224 SOUTH MICHIGAN AVENUE, SUITE 1000
CHICAGO, ILLINOIS 60604

FACET ENGINEERING
4316 NORTH ELSTON AVENUE
CHICAGO, ILLINOIS 60641

CHICAGO DEPARTMENT OF TRANSPORTATION
DIVISION OF ENGINEERING

STATE / LAKE LOOP ELEVATED STATION
200 NORTH STATE STREET, CHICAGO, IL 60601

DETAILS - GENERATOR TAP BOX

CDOT PROJECT D-1-209

DATE: 9/9/2022

SPEC. NO.

DRAWING NO. E-502

REVISION NO.

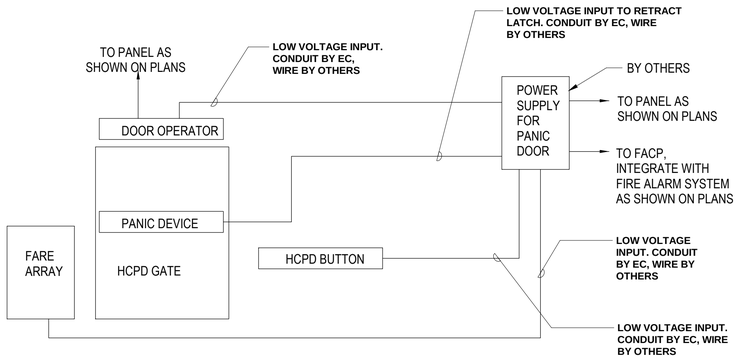

Operation Sequence:

(Fare Paid)(Unpaid Area Operation):

1. Fare paid at fare array
2. Fare array sends signal to panic device power supply
3. Panic device power supply retract the latch on the panic device
4. Panic device power supply sends signal to door operator
5. Door operator opens the door

(HCPD Button)(Paid Area Operation):

1. HCPD Button Pushed
2. Panic device power supply retract the latch on the panic device
3. Panic device power supply sends signal to door operator
4. Door operator opens the door

(Fire Alarm Integration):

1. Fire Alarm Control Panel sends signal to panic device power supply
2. Panic device power supply retract the latch on the panic device
3. Panic device power supply sends signal to door operator
   Door operator opens the door

1 ACCESSIBLE ENTRANCE GATES INSTALLATION DETAIL

NTS

DESIGN BY:										
DRAWN BY:										
CHECKED BY:										
APPROVED BY:		4	7/3/2023	ISSUED FOR BID	JM	EM	OS			
CDOT/APPROVED BY:		NO.	DATE	REVISIONS	DES.	DRW.	CHK.	DCCO	CDOT	

TRANSYSTEMS
222 SOUTH RIVERSIDE PLAZA SUITE 610
CHICAGO, ILLINOIS 60606

SKIDMORE, OWINGS & MERRILL LLP
224 SOUTH MICHIGAN AVENUE, SUITE 1000
CHICAGO, ILLINOIS 60604

FACET ENGINEERING
4316 NORTH ELSTON AVENUE
CHICAGO, ILLINOIS 60641

CHICAGO DEPARTMENT OF TRANSPORTATION
DIVISION OF ENGINEERING

STATE / LAKE LOOP ELEVATED STATION
200 NORTH STATE STREET, CHICAGO, IL 60601

SPEC. NO.

DETAILS - ACCESSIBLE ENTRANCE GATES

DRAWING NO. E-503

CDOT PROJECT D-1-209

DATE: 9/9/2022

REVISION NO.

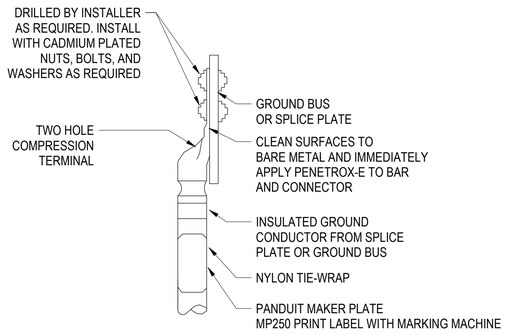

1 TYP. GROUND TERMINAL CONNECTION
NTS

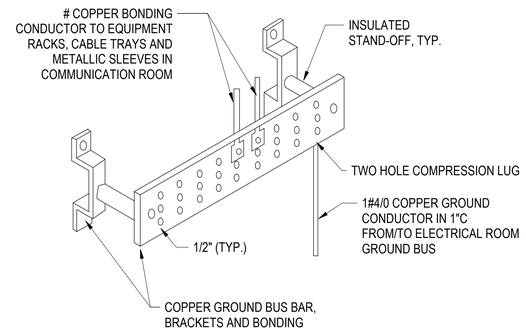

NOTES:

1. MOUNT COPPER GROUND BAR AT +6'-6" A.F.F.
2. STANDOFF INSULATIONS MUST BE PROVIDED WHEN ZONING THE BAR.

2 GROUND BUS BAR DETAIL
NTS

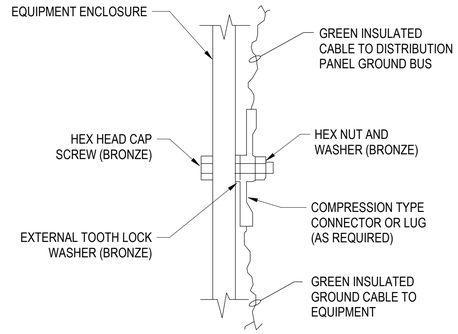

3 TYPICAL EQUIPMENT ENCLOSURE GROUNDING DETAIL
NTS

LAKE ST. KEY PLAN:

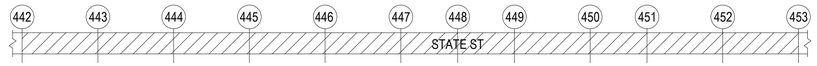

DESIGN BY:										
DRAWN BY:										
CHECKED BY:										
APPROVED BY:		4	7/3/2023	ISSUED FOR BID	JM	EM	OS			
CDOT/APPROVED BY:		NO.	DATE	REVISIONS	DES.	DRW.	CHK.	DCCO	CDOT	

TRANSYSTEMS
222 SOUTH RIVERSIDE PLAZA SUITE 610
CHICAGO, ILLINOIS 60606

SKIDMORE, OWINGS & MERRILL LLP
224 SOUTH MICHIGAN AVENUE, SUITE 1000
CHICAGO, ILLINOIS 60604

FACET ENGINEERING
4316 NORTH ELSTON AVENUE
CHICAGO, ILLINOIS 60641

CHICAGO DEPARTMENT OF TRANSPORTATION
DIVISION OF ENGINEERING

STATE / LAKE LOOP ELEVATED STATION
200 NORTH STATE STREET, CHICAGO, IL 60601

DETAILS - GROUNDING

CDOT PROJECT D-1-209

DATE: 9/9/2022

SPEC. NO.

DRAWING NO. E-504

REVISION NO.

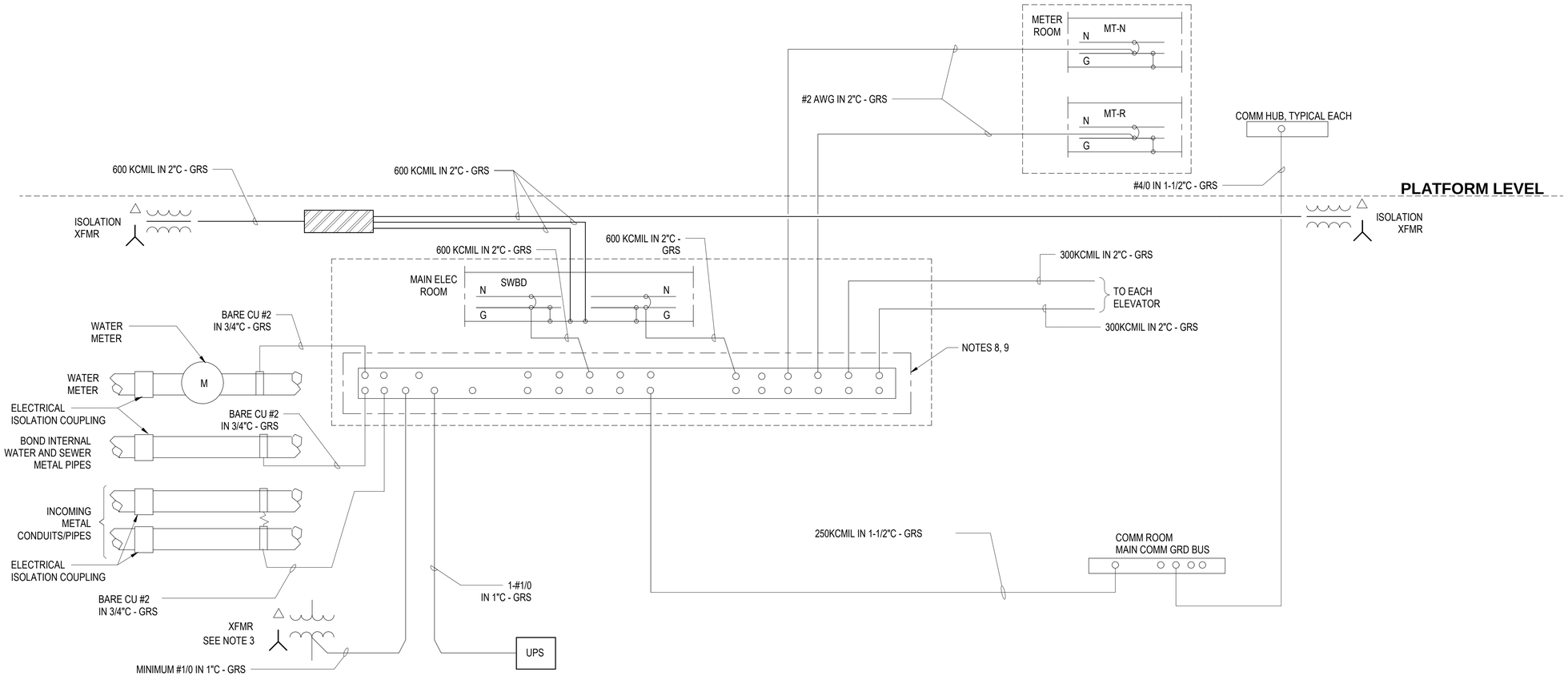

1 GROUNDING SYSTEM DIAGRAM
NTS

NOTES:

1. SEE DRAWING E-001 FOR ELECTRICAL SYMBOL LIST.
2. SEE DRAWING E-002 FOR ELECTRICAL GENERAL NOTES AND ABBREVIATIONS.
3. GROUNDING POINT OF TRANSFORMER SHALL BE CONNECTED TO GROUND BAR WHICH IS CLOSEST TO TRANSFORMER LOCATION.
4. EXOTHERMIC WELDED CONNECTION.
5. ALL UNGROUNDED CONDUITS SHALL BE NON-METALLIC.
6. ALL GROUND RODS SHALL BE 3/4" x 10'-0" MIN STAINLESS STEEL DRIVEN INTO UNDISTURBED EARTH TO ACHIEVE PROPER RESISTANCE.
7. ADDITIONAL GROUND RODS SHALL BE PROVIDED TO OBTAIN 25 OHM FIELD TESTED READING OF GROUNDING SYSTEM.
8. ALL CONNECTIONS TO GROUND BAR SHALL BE EXOTHERMICALLY WELDED.
9. CITY OF CHICAGO "HOGAN" GROUND ENCLOSURE WITH COPPER GROUND ELECTRODE SYSTEM BAR.

DESIGN BY:										
DRAWN BY:										
CHECKED BY:										
APPROVED BY:		4	7/3/2023	ISSUED FOR BID	JM	EM	OS			
CDOT/APPROVED BY:		NO.	DATE	REVISIONS	DES.	DRW.	CHK.	DCCO	CDOT	

TRANSYSTEMS
222 SOUTH RIVERSIDE PLAZA SUITE 610
CHICAGO, ILLINOIS 60606

SKIDMORE, OWINGS & MERRILL LLP
224 SOUTH MICHIGAN AVENUE, SUITE 1000
CHICAGO, ILLINOIS 60604

FACET ENGINEERING
4316 NORTH ELSTON AVENUE
CHICAGO, ILLINOIS 60641

CHICAGO DEPARTMENT OF TRANSPORTATION
DIVISION OF ENGINEERING

STATE / LAKE LOOP ELEVATED STATION
200 NORTH STATE STREET, CHICAGO, IL 60601

DETAILS - GROUNDING SYSTEM

CDOT PROJECT D-1-209

DATE: 9/9/2022

SPEC. NO.

DRAWING NO. E-505

REVISION NO.

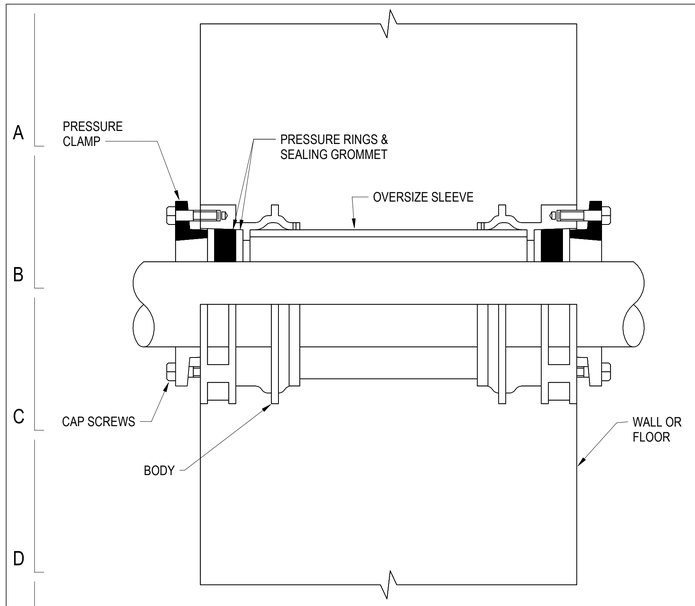

1 THRUWALL AND FLOOR CONDUIT SEALS
N.T.S.

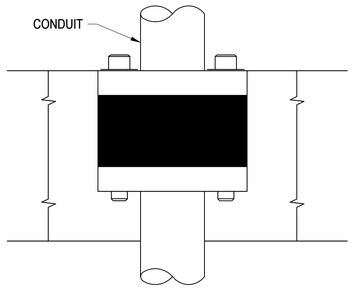

2 SEALING BUSHING
N.T.S.

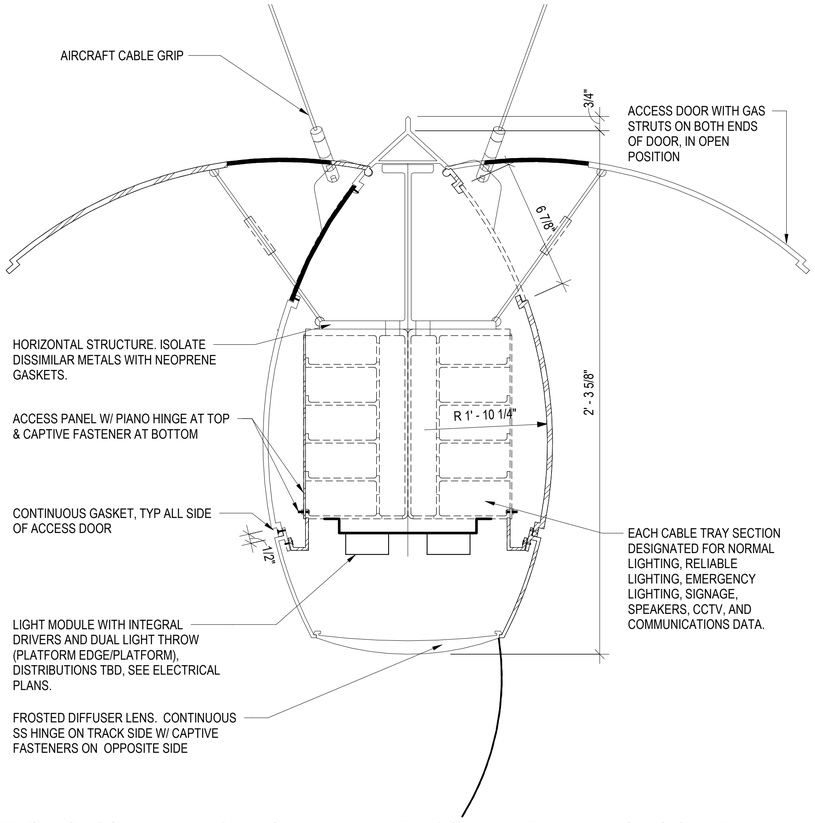

7 SECTION DETAIL - CABLE AND LIGHT TRAY ENCLOSURE TYP
NTS

NOTES:

1. SEE DRAWING E-001 FOR ELECTRICAL SYMBOL LIST.
2. SEE DRAWING E-002 FOR ELECTRICAL GENERAL NOTES AND ABBREVIATIONS.
3. CONDUITS MUST BE SUPPORTED SECURELY FASTEND SUPPORTED AT INTERVALS NOT EXCEEDING 7 FEET

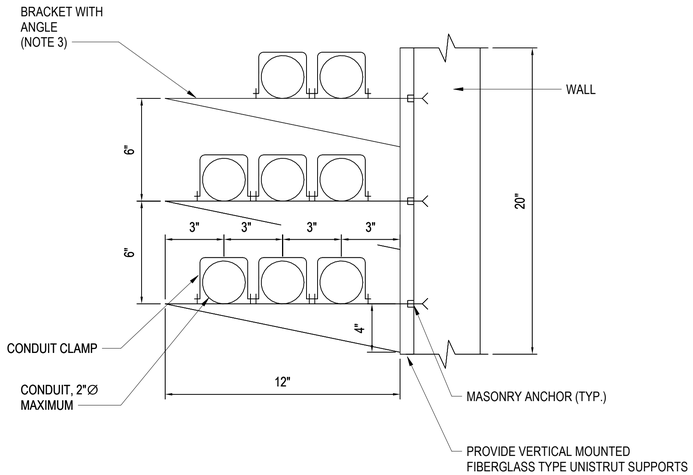

3 CONDUIT MOUNTING DETAIL
N.T.S.

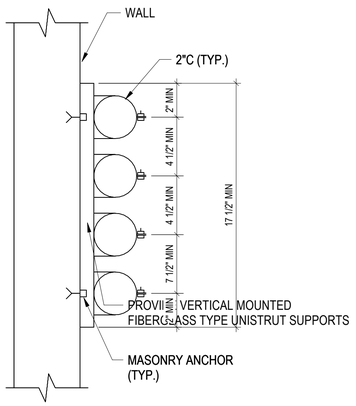

4 CONDUIT MOUNTING DETAIL
N.T.S.

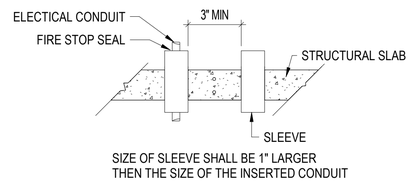

SIZE OF SLEEVE SHALL BE 1" LARGER THEN THE SIZE OF THE INSERTED CONDUIT

5 TYPICAL SLEEVE
NTS

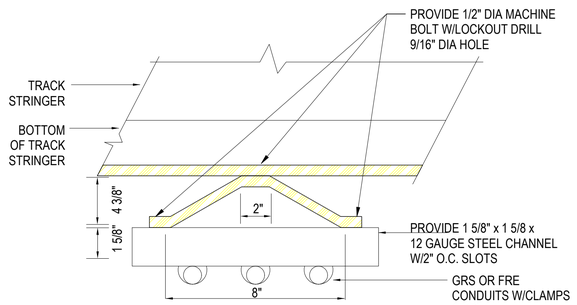

6 DETAILS - CONDUIT CROSSING GIRDER
NTS

DESIGN BY:										
DRAWN BY:										
CHECKED BY:										
APPROVED BY:		4	7/3/2023	ISSUED FOR BID	JM	EM	OS			
CDOT/APPROVED BY:		NO.	DATE	REVISIONS	DES.	DRW.	CHK.	DCCO	CDOT	

TRANSYSTEMS
222 SOUTH RIVERSIDE PLAZA SUITE 610
CHICAGO, ILLINOIS 60606

SKIDMORE, OWINGS & MERRILL LLP
224 SOUTH MICHIGAN AVENUE, SUITE 1000
CHICAGO, ILLINOIS 60604

FACET ENGINEERING
4316 NORTH ELSTON AVENUE
CHICAGO, ILLINOIS 60641

CHICAGO DEPARTMENT OF TRANSPORTATION
DIVISION OF ENGINEERING

STATE / LAKE LOOP ELEVATED STATION
200 NORTH STATE STREET, CHICAGO, IL 60601

DETAILS - CONDUIT

CDOT PROJECT D-1-209 | DATE: 9/9/2022

SPEC. NO.

DRAWING NO. E-506

REVISION NO.

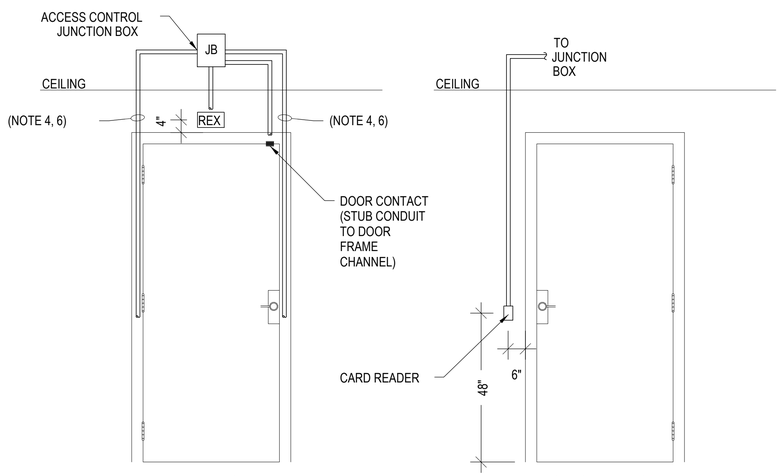

NOTES:

1. ALL CONDUITS SHALL BE 3/4" UNLESS NOTED OTHERWISE.
2. REFER TO PLANS FOR EXACT DOOR SWING.
3. REFER TO AUTODOOR SHOP DRAWINGS FOR EXACT CONDUIT ROUGH-IN LOCATIONS.
4. FOR FILLED FRAMES, PROVIDE EXPOSED CONDUITS ON SECURE SIDE OF DOOR.
5. ALL CONDUITS ARE SHOWN RECESSED IN WALL. WHEN SURFACE-MOUNTED CONDUIT IS REQUIRED, ROUTE ON SECURED SIDE OF DOOR AND PENETRATE AT DEVICE LOCATION AS REQUIRED.
6. PROVIDE CONDUIT AT STRIKE SIDE OF DOOR FOR DOORS PREPPED FOR ELECTRIC STRIKES. PROVIDE CONDUIT AT HINGE SIDE OF DOOR FOR DOORS PREPPED FOR ELECTRIFIED DOOR HARDWARE.

1 ACCESS CONTROL AT SINGLE DOOR DETAILS
NTS

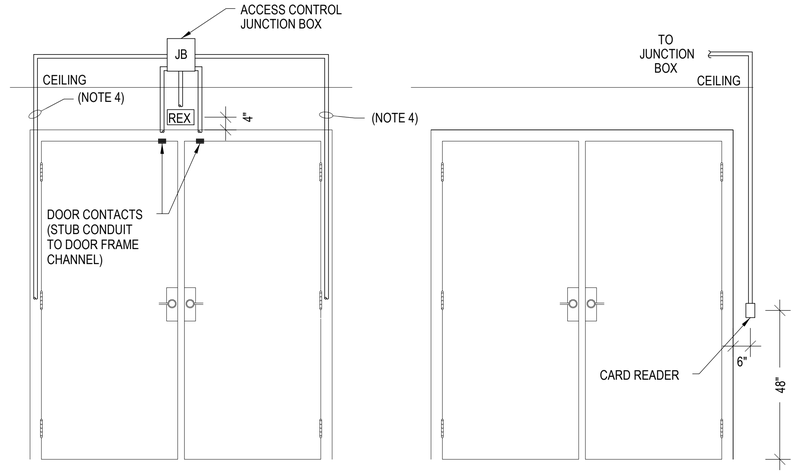

NOTES:

1. ALL CONDUITS SHALL BE 3/4" UNLESS NOTED OTHERWISE.
2. REFER TO PLANS FOR EXACT DOOR SWING.
3. REFER TO AUTODOOR SHOP DRAWINGS FOR EXACT CONDUIT ROUGH-IN LOCATIONS.
4. FOR FILLED FRAMES, PROVIDE EXPOSED CONDUITS ON SECURE SIDE OF DOOR.
5. ALL CONDUITS ARE SHOWN RECESSED IN WALL. WHEN SURFACE-MOUNTED CONDUIT IS REQUIRED, ROUTE ON SECURED SIDE OF DOOR AND PENETRATE AT DEVICE LOCATION AS REQUIRED.

2 ACCESS CONTROL AT DOUBLE DOOR DETAIL
NTS

DESIGN BY:										
DRAWN BY:										
CHECKED BY:										
APPROVED BY:		4	7/3/2023	ISSUED FOR BID	JM	EM	OS			
CDOT/APPROVED BY:		NO.	DATE	REVISIONS	DES.	DRW.	CHK.	DCCO	CDOT	

TRANSYSTEMS
222 SOUTH RIVERSIDE PLAZA SUITE 610
CHICAGO, ILLINOIS 60606

SKIDMORE, OWINGS & MERRILL LLP
224 SOUTH MICHIGAN AVENUE, SUITE 1000
CHICAGO, ILLINOIS 60604

FACET ENGINEERING
4316 NORTH ELSTON AVENUE
CHICAGO, ILLINOIS 60641

CHICAGO DEPARTMENT
OF TRANSPORTATION
DIVISION OF ENGINEERING

STATE / LAKE LOOP ELEVATED STATION
200 NORTH STATE STREET, CHICAGO, IL 60601

DETAILS - ACCESS CONTROL DOOR

CDOT PROJECT D-1-209

DATE: 9/9/2022

SPEC. NO.

DRAWING NO.
E-507

REVISION NO.

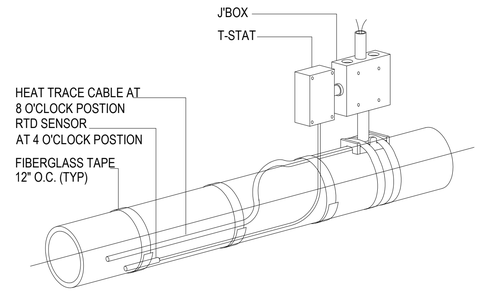

USE THE T-F FIBERGLASS BANDING TAPE, ON BOTH METAL AND NONMETALLIC PIPES TO HOLD CABLE ONTO THE PIPE, INSTALL TAPE EVERY 12".

1 HEAT TRACE POWER CONNECTION, TYPICAL

NTS

DESIGN BY:										
DRAWN BY:										
CHECKED BY:										
APPROVED BY:		4	7/3/2023	ISSUED FOR BID	JM	EM	OS			
CDOT/APPROVED BY:		NO.	DATE	REVISIONS	DES.	DRW.	CHK.	DCCO	CDOT	

TRANSYSTEMS
222 SOUTH RIVERSIDE PLAZA SUITE 610
CHICAGO, ILLINOIS 60606

SKIDMORE, OWINGS & MERRILL LLP
224 SOUTH MICHIGAN AVENUE, SUITE 1000
CHICAGO, ILLINOIS 60604

FACET ENGINEERING
4316 NORTH ELSTON AVENUE
CHICAGO, ILLINOIS 60641

CHICAGO DEPARTMENT OF TRANSPORTATION
DIVISION OF ENGINEERING

STATE / LAKE LOOP ELEVATED STATION
200 NORTH STATE STREET, CHICAGO, IL 60601

DETAILS - HEAT TRACE POWER CONNECTIONS

CDOT PROJECT D-1-209

DATE: 9/9/2022

SPEC. NO.

DRAWING NO. E-508

REVISION NO.

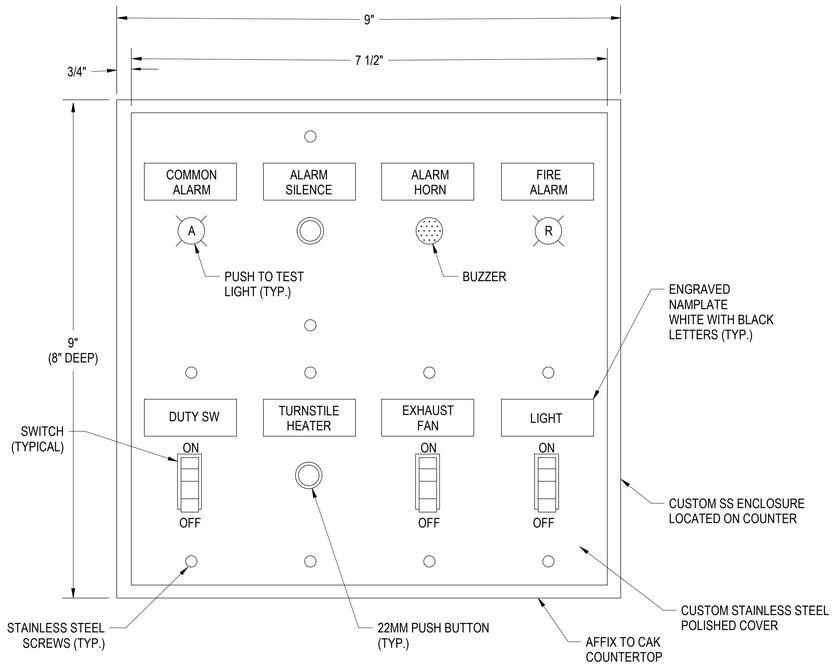

1 CUSTOMER ASSISTANCE KIOSK (CAK) SWITCH BANK, TYPICAL
NTS

NOTES:

1. SEE DRAWING E-001 FOR ELECTRICAL SYMBOL LIST.
2. SEE DRAWING E-002 FOR ELECTRICAL GENERAL NOTES AND ABBREVIATIONS.

DESIGN BY:										
DRAWN BY:										
CHECKED BY:										
APPROVED BY:		4	7/3/2023	ISSUED FOR BID	EM	EM	JM			
CDOT/APPROVED BY:		NO.	DATE	REVISIONS	DES.	DRW.	CHK.	DCCO	CDOT	

TRANSYSTEMS
222 SOUTH RIVERSIDE PLAZA SUITE 610
CHICAGO, ILLINOIS 60606

SKIDMORE, OWINGS & MERRILL LLP
224 SOUTH MICHIGAN AVENUE, SUITE 1000
CHICAGO, ILLINOIS 60604

FACET ENGINEERING
4316 NORTH ELSTON AVENUE
CHICAGO, ILLINOIS 60641

CHICAGO DEPARTMENT OF TRANSPORTATION
DIVISION OF ENGINEERING

STATE / LAKE LOOP ELEVATED STATION
200 NORTH STATE STREET, CHICAGO, IL 60601

DETAILS - CAK ALARM PANEL

CDOT PROJECT D-1-209

DATE: 9/9/2022

SPEC. NO.

DRAWING NO. E-509

REVISION NO.

- DRILL (4) 1/2" DIA. HOLES IN BOTTOM OF CABINET & TOP OF BALLAST HOUSING BASE. BOLT CABINET TO B.H.B. USING (4) 3/8" X 2 1/2" BOLTS.
- OPENINGS IN BOTTOM OF CABINET & TOP OF B.H.B. MAY BE ENLARGED TO A MAX. OF 5" X 10" TO FACILITATE ADDITIONAL CABLE.
- NUMBER & SIZE OF CONDUITS TO BE SHOWN ON CONSTRUCTION DRAWINGS.
- SEE DRAWING # 884 FOR ELECTRICAL PANEL DETAILS.
- SEE DRAWINGS # 862 & 864 FOR WIRING DIAGRAM.

CODE	DRWG.	MATERIAL	SIZE	QUANT.
05-5082-5324	—	FIBER FORM	20" ø	4'
05-3267-2940	—	CONCRETE	CU. YD.	0.7
37-8180-0236	811	ANCHOR ROD	1" X 60"	4
09-7796-9200	—	GROUND ROD	3/4" X 10'	1
09-2636-3240	—	CLAMP, GROUND ROD	3/4"	1
09-3392-7850		CABINET ALUMINUM	41"X25"X16"	1
37-2130-4280	785	BALLAST HOUSING BS	1'-4" X 1'-8"	1

NOTE:
HENNESSY "G" CABINET # 212374 OR U.L. APPROVED EQUIVALENT.

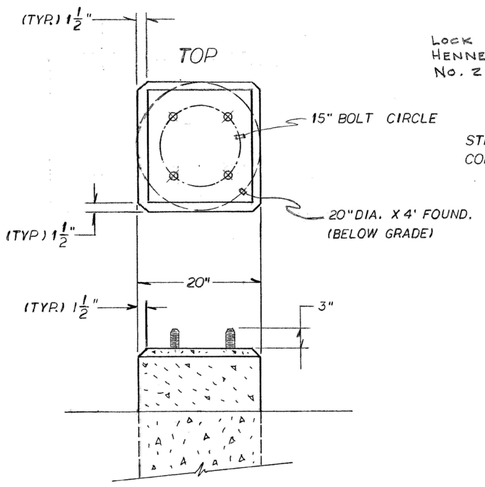

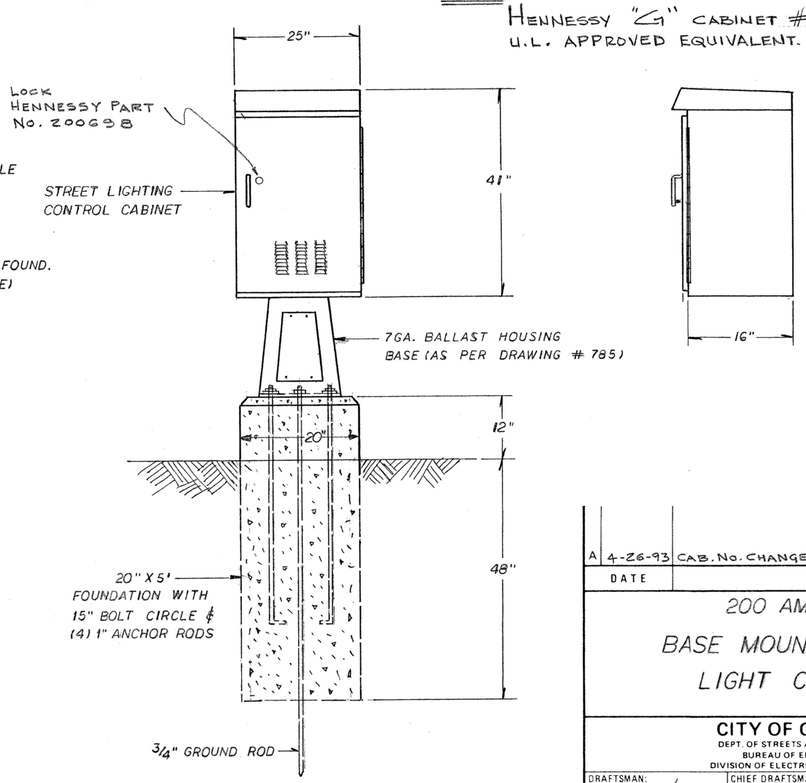

A	4-26-93	CAB. No. CHANGED CITY NAME REMOVED
DATE		REVISION

200 AMP.
BASE MOUNTED STREET LIGHT CONTROLLER

CITY OF CHICAGO
DEPT. OF STREETS AND SANITATION
BUREAU OF ELECTRICITY
DIVISION OF ELECTRICAL ENGINEERING

DRAFTSMAN: Armando Vivanco	CHIEF DRAFTSMAN: Carmen Respino	ENGINEER: M. DeBartolo
SUPERVISING ENGINEER: D. Carlson	ELEC. DESIGN ENGR.	DWG. NO. 880
ENGINEER OF ELECTRICITY: A. Dukelsky		
GEN'L. SUPT. OF ELECTRICITY		
DEPUTY COMMISSIONER:		
SIZE: 16 | 21	SCALE:	DATE:

544717
CENTURY BLUE PRINT 90280 1/87

DESIGN BY:									
DRAWN BY:									
CHECKED BY:									
APPROVED BY:		4	7/3/2023	ISSUED FOR BID	JM	EM	JM		
CDOT/APPROVED BY:		NO.	DATE	REVISIONS	DES.	DRW.	CHK.	DCCO	CDOT

TRANSYSTEMS
222 SOUTH RIVERSIDE PLAZA SUITE 610
CHICAGO, ILLINOIS 60606

SKIDMORE, OWINGS & MERRILL LLP
224 SOUTH MICHIGAN AVENUE, SUITE 1000
CHICAGO, ILLINOIS 60604

FACET ENGINEERING
DBE/MBE CERTIFIED
Performance • Respect • Initiation • Dedication • Experience
FACET ENGINEERING
4316 NORTH ELSTON AVENUE
CHICAGO, ILLINOIS 60641

CHICAGO DEPARTMENT OF TRANSPORTATION
DIVISION OF ENGINEERING

STATE / LAKE LOOP ELEVATED STATION
200 NORTH STATE STREET, CHICAGO, IL 60601

DETAILS - CDOT STANDARDS

CDOT PROJECT D-1-209 | DATE: 9/9/2022

SPEC. NO.

DRAWING NO. E-580

REVISION NO.

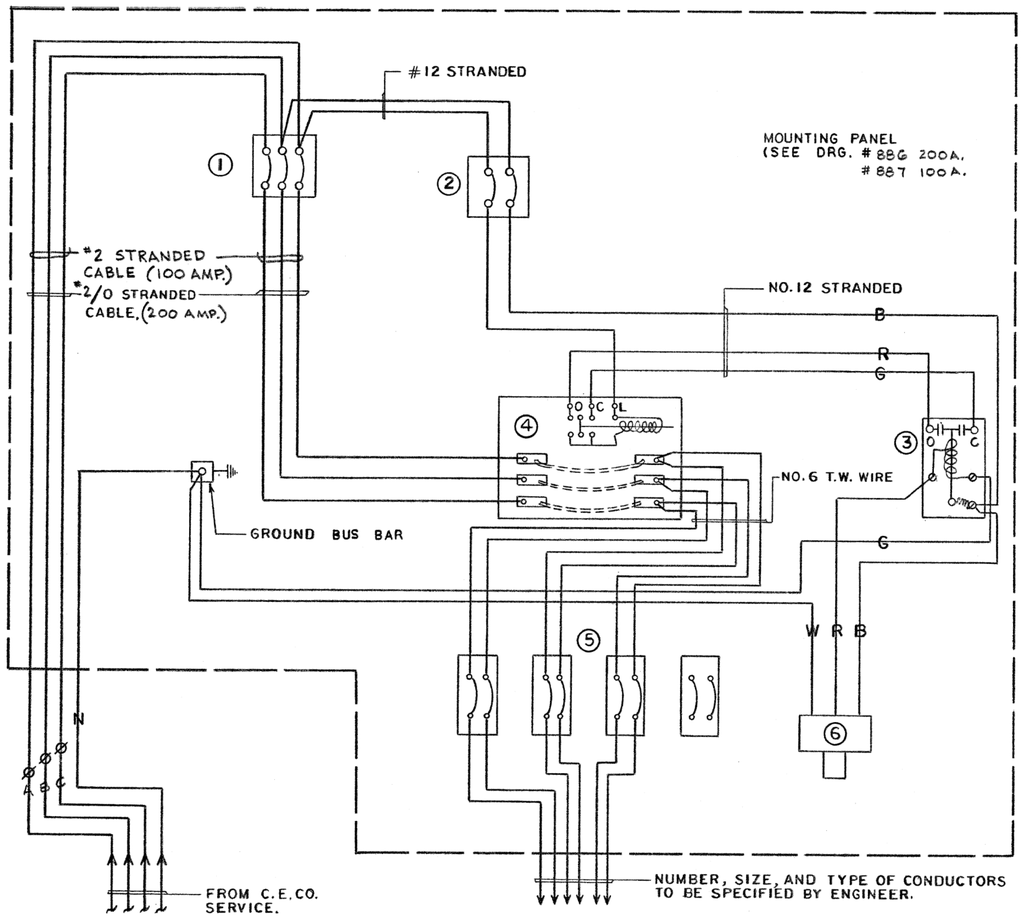

① CIRCUIT BREAKER - 3 POLE, 100A. "FDB" FRAME OR 200A. "JDB" FRAME (WESTINGHOUSE CO.)

② – MANUAL STARTER – 2 POLE, 5.3A. THERMAL OVERLOAD (SQUARE D CLASS 2510, TYPE FO-2)

③ – RELAY (POTTER. BRUMFIELD PRD 5AY0-120)

④ – REMOTE CONTROL SWITCH – 3 POLE, 100A. OR 200A. 240 V. AC. COIL. (AUTOMATIC SWITCH CO.)

⑤ – BRANCH CIRCUIT BREAKER – 2 POLE, 50A., OR 70A. "EHD" FRAME. (WESTINGHOUSE CO.)

⑥ – PHOTO ELECTRIC CELL DARK TO LIGHT MODEL DB120 – 1.5HT 105 – 130 VAC 60HZ.

– SEE DRG. NO. 876 FOR CABINET ASSEMBLY.

– MOUNT PHOTO-CELL IN BOTTOM OF CABINET AT RIGHT SIDE, BOTTOM OF PHOTO-CELL TO BE FLUSH OR SLIGHTLY ABOVE OUTSIDE EDGE OF CABINET.

– GROUND BUS TO BE MOUNTED ON LEFT SIDE WALL OF CABINET (SEE DETAIL DRG. # 887 DRG. # 886

DATE	REVISION

WIRING DIAG. FOR 100/200 AMP. THREE PHASE 120/208V. STREET LIGHTING CONTROLLER WITH PHOTO – CELL CONTROL.

CITY OF CHICAGO
DEPT. OF STREETS AND SANITATION
BUREAU OF ELECTRICITY
DIVISION OF ELECTRICAL ENGINEERING

DRAFTSMAN:	CHIEF DRAFTSMAN:	ENGINEER:
SHAKIL AHMED	CARMEN RESPIN	W. TROMKA.

SUPERVISING ENGINEER: D. Carlson — ELEC. DESIGN ENGR.
ENGINEER OF ELECTRICITY: A. Dukelsky
GEN'L. SUPT. OF ELECTRICITY
DEPUTY COMMISSIONER:

DWG. NO. 864

SIZE: 17"x22" — SCALE: NONE — DATE: 10/14/90

CENTURY BLUE PRINT 90280 1/87

DESIGN BY:										
DRAWN BY:										
CHECKED BY:										
APPROVED BY:		4	7/3/2023	ISSUED FOR BID	JM	EM	JM			
CDOT/APPROVED BY:		NO.	DATE	REVISIONS	DES.	DRW.	CHK.	DCCO	CDOT	

TRANSYSTEMS
222 SOUTH RIVERSIDE PLAZA SUITE 610
CHICAGO, ILLINOIS 60606

SKIDMORE, OWINGS & MERRILL LLP
224 SOUTH MICHIGAN AVENUE, SUITE 1000
CHICAGO, ILLINOIS 60604

FACET ENGINEERING
DBE/MBE CERTIFIED
Performance • Respect • Initiation • Dedication • Experience
FACET ENGINEERING
4316 NORTH ELSTON AVENUE
CHICAGO, ILLINOIS 60641

CHICAGO DEPARTMENT OF TRANSPORTATION
DIVISION OF ENGINEERING

STATE / LAKE LOOP ELEVATED STATION
200 NORTH STATE STREET, CHICAGO, IL 60601

SPEC. NO.

DETAILS - CDOT STANDARDS

DRAWING NO. E-581

CDOT PROJECT D-1-209 — DATE: 9/9/2022 — REVISION NO.

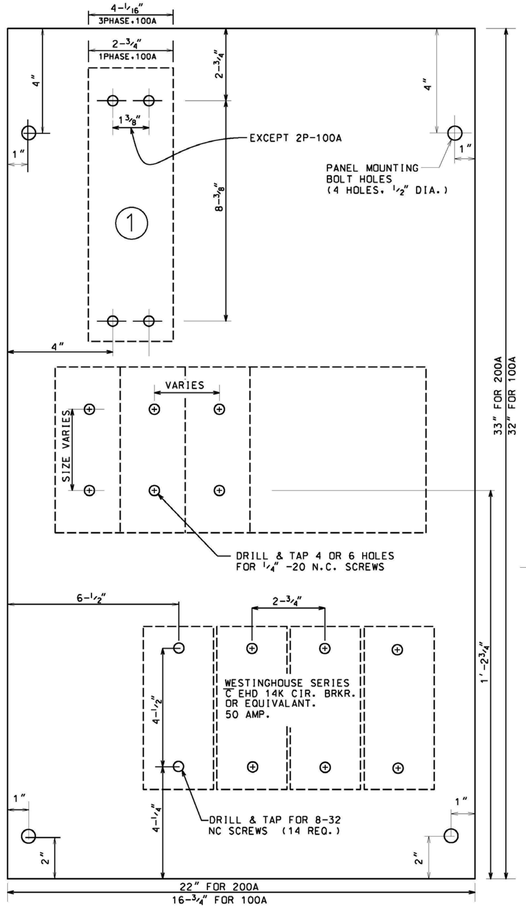

BACK PANEL
1/2" THICK PHENOLIC LINEN BASE

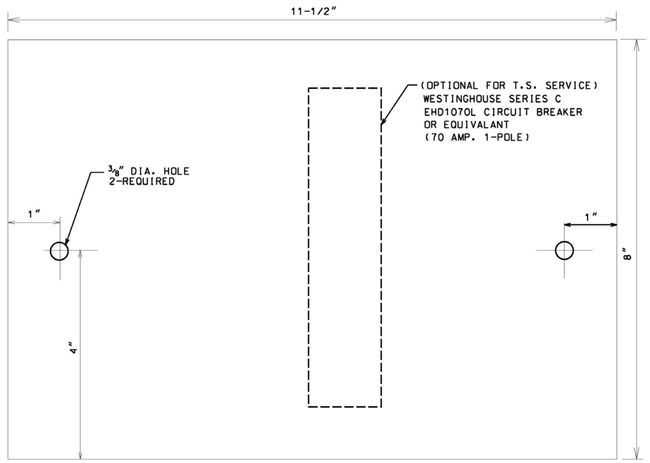

(OPTIONAL)

PANEL FOR TRAFFIC SIGNAL SERVICE
1/2" THICK PHENOLIC LINEN BASE PANEL
TO BE MOUNTED ON UPPER LEFT SIDE OF CABINET

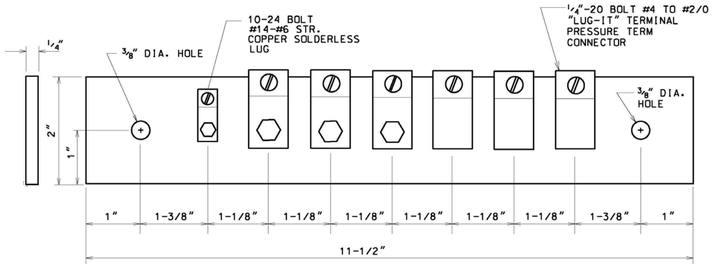

1/4" THICK COPPER BUS BAR
TO BE MOUNTED ON LOWER LEFT SIDE OF CABINET.

SEE DRG.#880 FOR CABINET DETAIL
SEE DRG# 983 FOR WIRING DIAGRAM

(1) - MAIN CIRCUIT BREAKER
100A 1PHASE : C FDB 14K 2P
100A 3PHASE : C FDB 14K 3P
200A 1PHASE : C JDK 25K 2P
200A 3PHASE : C JDB 25K 3P

(2) - POWER DISTRIBUTION BLOCKS RATED 600V, BASED ON NEC 376.56(B) 1-4, AND 310.15(B)(16) 75°C AMPACITIES (MERSEN OR EQUAL)

A	
DATE	REVISION

PANELS FOR 100A/200A
2 AND 3 POLE EQUIPMENT
IN STREET LIGHT CONTROL CABINET-
CONSTANT POWER

CITY OF CHICAGO
DEPARTMENT OF TRANSPORTATION
DIVISION OF ENGINEERING-ELECTRICAL SECTION

DRAFTSMAN/ENGINEER :	G.M.PADIYAR	DWG. NO.
SUPERVISING ENGINEER:	O. LETAMENDI	984
PROFESSIONAL ENGINEER :	R. POOL	
ENGINEER OF ELECTRICITY:		
DEPUTY COMMISSIONER:		
SIZE: 16" | 22"	SCALE: NONE	DATE: 10/12/17

DATE: 10/18/2017
FILE: H:\E_JM\New Drawings\984_Panel_10122017.dgn

DESIGN BY:									
DRAWN BY:									
CHECKED BY:									
APPROVED BY:		4	7/3/2023	ISSUED FOR BID	JM	EM	JM		
CDOT/APPROVED BY:		NO.	DATE	REVISIONS	DES.	DRW.	CHK.	DCCO	CDOT

TRANSYSTEMS
222 SOUTH RIVERSIDE PLAZA SUITE 610
CHICAGO, ILLINOIS 60606

SKIDMORE, OWINGS & MERRILL LLP
224 SOUTH MICHIGAN AVENUE, SUITE 1000
CHICAGO, ILLINOIS 60604

FACET ENGINEERING
4316 NORTH ELSTON AVENUE
CHICAGO, ILLINOIS 60641

CHICAGO DEPARTMENT OF TRANSPORTATION
DIVISION OF ENGINEERING

STATE / LAKE LOOP ELEVATED STATION
200 NORTH STATE STREET, CHICAGO, IL 60601

DETAILS - CDOT STANDARDS

CDOT PROJECT D-1-209 | DATE: 9/9/2022

SPEC. NO.

DRAWING NO. E-582

REVISION NO.

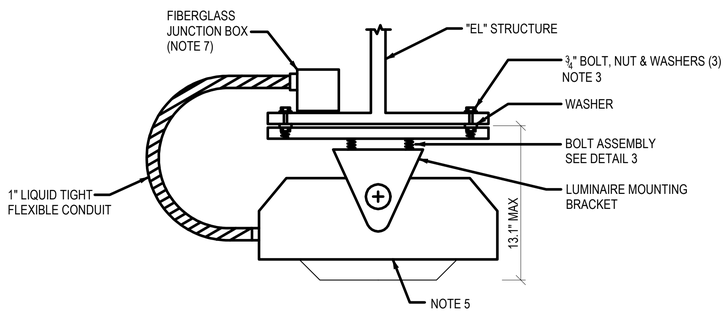

1 UNDERPASS LIGHTING FIXTURE MOUNTING DETAIL (SIDE VIEW)

N.T.S.

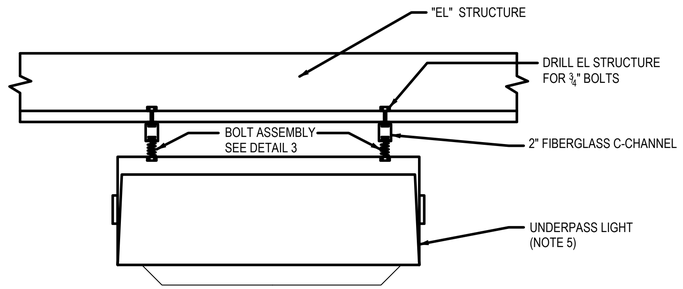

2 UNDERPASS LIGHTING FIXTURE MOUNTING DETAIL (FRONT VIEW)

N.T.S.

NOTES:

1. REFER TO PLAN DRAWINGS FOR LOCATIONS OF UNDERPASS LUMINAIRES. LUMINAIRES TO BE INSTALLED AT THE APPROXIMATE LOCATION AND TO THE BOTTOM OF EXISTING STRINGERS.
2. REFER TO DRAWING E-184 THROUGH E-103 FOR TYPICAL PROPOSED UNDERPASS LIGHTING LAYOUT.
3. DRILL BEAM TO ACCOMODATE ¾" BOLT. EXACT LOCATION TO BE APPROVED BY THE COMMISSIONER AND THE CTA. EACH LIGHTING FIXTURE REQUIRES FOUR BOLTS. PROVIDE WASHER BETWEEN UNISTRUT AND STRUCTURE. PROVIDE FLAT WASHER (TOP) AND LOCK WASHER BOTTOM FOR EACH BOLT.
4. ALL LUMINAIRE MOUNTING HARDWARE INCLUDING CHANNEL. NUTS, BOLTS AND WASHERS TO BE STAINLESS STEEL IF AVAILABLE.
5. ALL CONDUIT FEEDING UNDERPASS LIGHTING TO BE ELECTRICALLY ISOLATED FROM TRACK STRUCTURE USING FIBERGLASS UNISTRUT.

MATERIAL LIST:

1. BOLT, STEEL, ¾" DIAMETER
2. WASHER STEEL, 1⅞" DIA. x 3/32" THICK
3. NEOPRENE GROMMET, 1⅞" DIA. x 3/32" THICK
4. SPRING, STEEL, 15#, 1½" DIA. x 3/32"
5. CHANNEL NUT WITH SPRING UNISTRUT PART NO. P10235.

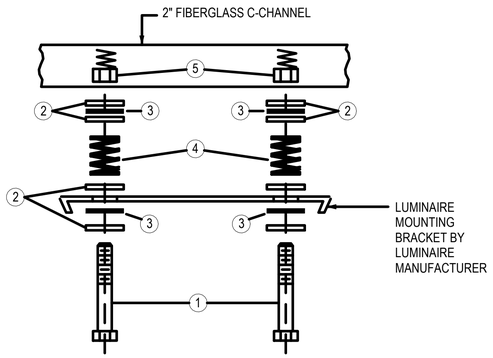

3 BOLT ASSEMBLY DETAIL

N.T.S.

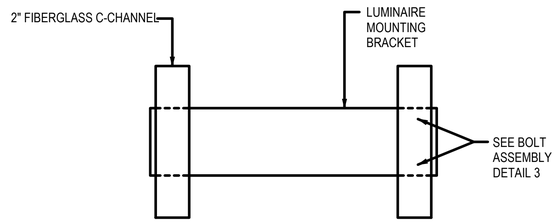

4 UNDERPASS BRACKET MOUNTING DETAIL (TOP VIEW)

N.T.S.

DESIGN BY:										
DRAWN BY:										
CHECKED BY:										
APPROVED BY:		4	7/3/2023	ISSUED FOR BID	JM	EM	SM			
CDOT/APPROVED BY:		NO.	DATE	REVISIONS	DES.	DRW.	CHK.	DCCO	CDOT	

TRANSYSTEMS
222 SOUTH RIVERSIDE PLAZA SUITE 610
CHICAGO, ILLINOIS 60606

SKIDMORE, OWINGS & MERRILL LLP
224 SOUTH MICHIGAN AVENUE, SUITE 1000
CHICAGO, ILLINOIS 60604

FACET ENGINEERING
4316 NORTH ELSTON AVENUE
CHICAGO, ILLINOIS 60641

CHICAGO DEPARTMENT OF TRANSPORTATION
DIVISION OF ENGINEERING

STATE / LAKE LOOP ELEVATED STATION
200 NORTH STATE STREET, CHICAGO, IL 60601

DETAILS - CDOT STREET LIGHTING UNDERPASS LIGHTING INSTALLATION

CDOT PROJECT D-1-209

DATE: 9/9/2022

SPEC. NO.

DRAWING NO. E-583

REVISION NO.

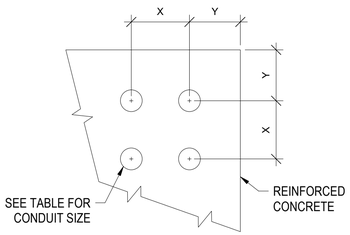

TYPICAL CONDUIT SPACING

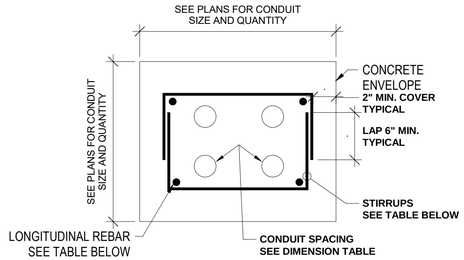

TYPICAL DUCTBANK REINFORCEMENT

TYPICAL DIMENSION TABLE

TYPICAL DIMENSION / CONDUIT SIZE (GRS & PVC)	X	Y
2"	4 1/2"	4 1/4"
3"	5 1/2"	4 3/4"
4"	6 1/2"	5 1/4"
5"	7 1/2"	5 3/4"

DUCTBANK REINFORCEMENT TABLE

DUCT BANK CONCRETE CROSS-SECTIONAL AREA SQ. IN.	LONGITUDINAL REBAR		STIRRUPS
	BARS	MIN. LAP (INCHES)	
LESS THAN 450	4 #4	12	#3 AT 12" SPACING
451 TO 650	4 #5	18	#3 AT 12" SPACING
GREATER THAN 651	4 #6	24	#3 AT 12" SPACING

1 TYPICAL DUCTBANK DETAILS

NTS

DESIGN BY:										
DRAWN BY:										
CHECKED BY:										
APPROVED BY:		4	7/3/2023	ISSUED FOR BID	JM	EM	SM			
CDOT/APPROVED BY:		NO.	DATE	REVISIONS	DES.	DRW.	CHK.	DCCO	CDOT	

TRANSYSTEMS
222 SOUTH RIVERSIDE PLAZA SUITE 610
CHICAGO, ILLINOIS 60606

SKIDMORE, OWINGS & MERRILL LLP
224 SOUTH MICHIGAN AVENUE, SUITE 1000
CHICAGO, ILLINOIS 60604

FACET ENGINEERING
4316 NORTH ELSTON AVENUE
CHICAGO, ILLINOIS 60641

CHICAGO DEPARTMENT
OF TRANSPORTATION
DIVISION OF ENGINEERING

STATE / LAKE LOOP ELEVATED STATION
200 NORTH STATE STREET, CHICAGO, IL 60601

DETAILS - DUCTBANK INSTALLATION DETAILS

CDOT PROJECT D-1-209

DATE: 9/9/2022

SPEC. NO.

DRAWING NO.
E-584

REVISION NO.

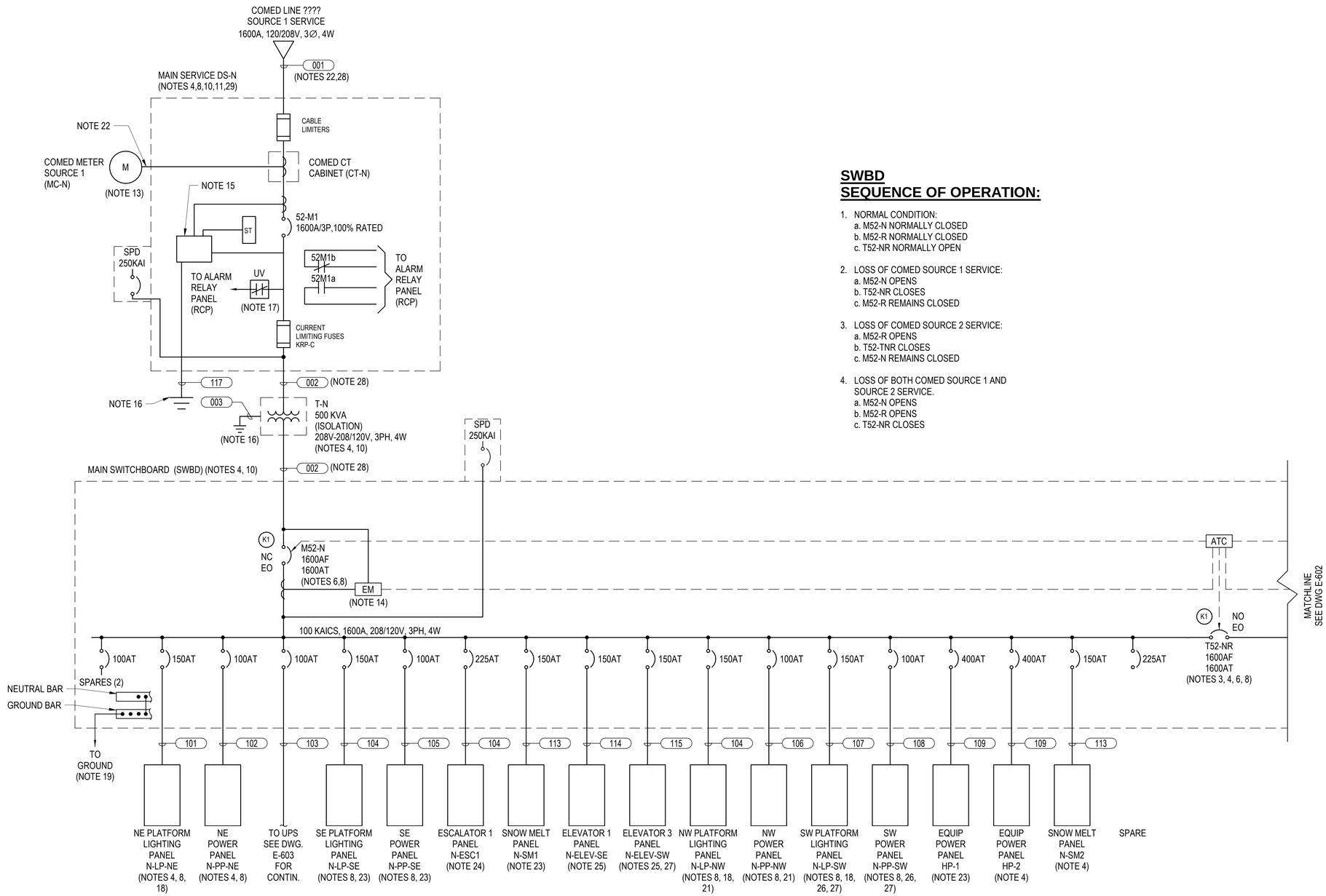

SWBD
SEQUENCE OF OPERATION:

1. NORMAL CONDITION:
   a. M52-N NORMALLY CLOSED
   b. M52-R NORMALLY CLOSED
   c. T52-NR NORMALLY OPEN
2. LOSS OF COMED SOURCE 1 SERVICE:
   a. M52-N OPENS
   b. T52-NR CLOSES
   c. M52-R REMAINS CLOSED
3. LOSS OF COMED SOURCE 2 SERVICE:
   a. M52-R OPENS
   b. T52-TNR CLOSES
   c. M52-N REMAINS CLOSED
4. LOSS OF BOTH COMED SOURCE 1 AND SOURCE 2 SERVICE.
   a. M52-N OPENS
   b. M52-R OPENS
   c. T52-NR CLOSES

NOTES:

1. SEE DRAWING E-001 FOR ELECTRICAL SYMBOL LIST.
2. SEE DRAWING E-002 FOR ELECTRICAL GENERAL NOTES AND ABBREVIATIONS
3. KEY INTERLOCKING TO PREVENT CONCURRENT OPERATION OF COMED ELECTRIC SERVICE POWER AND CTA PORTABLE GENERATOR.
4. LOCATED IN MAIN ELECTRICAL ROOM.
5. SEE DRAWING E-901 FOR EMERGENCY LIGHTING SINGLE LINE DIAGRAM.
6. MAIN AND TIE CIRCUIT BREAKERS SHALL BE PROVIDED WITH LONG TIME, SHORT TIME INSTANTANEOUS, AND GROUND FAULT TRIPPING.
7. ALL CONDUIT TO BE GRC, UNO.
8. PROVIDE N.C. CONTACT FOR OPEN/CLOSE STATUS TO SCADA. REFER TO DRAWING E-629 FOR ITC WIRING DIAGRAM.
9. REFER TO ARCHITECTURAL LIGHTING DRAWINGS FOR ADDITIONAL DETAILS.
10. FLOOR MOUNTED EQUIPMENT TO BE INSTALLED ON A 4 INCH CONCRETE PAD WITH A 4 INCH LIP. SEE SPECIFICATIONS.
11. ALL EQUIPMENT TO HAVE A MINIMUM RATING OF 65KAIC. SERIES RATED BREAKERS ARE NOT ALLOWED.
12. SIZE ALL CONDUIT AND CABLE PER CEC.
13. LOCATED IN METER CLOSET.
14. "EM" TO INCLUDE ANSI 27/59, 81OU, AND 47 DEVICES AS PART OF THE METER, BREAKER SENSING, OR PROVIDE SEPARATE DEVICES.
15. GROUND FAULT RELAY. SEE DWG E-603.
16. GROUND TO PLATFORM EL STRUCTURE WITH CABLE SIZED AS SHOWN. ALL GROUND CONNECTIONS TO TRACK STRUCTURE SHALL BE EXOTHERMIC WELD.
17. UNDER VOLTAGE SENSING RELAY.
18. PROVIDE SPD PROTECTION LOCATED IN OR NEAR ALL LIGHTING AND EMERGENCY POWER PANELS, SIZED AS REQUIRED.
19. GROUNDING CONDUCTOR CONNECTED TO PERIMETER GROUND BUS.
20. ALL CIRCUIT BREAKERS TO HAVE A MINIMUM RATING OF 65 KAIC OR AS REQUIRED BY POWER STUDY.
21. LOCATED IN NW ELECTRICAL CLOSET.
22. PROVIDE CONDUIT AND WIRES PER COMED REQUIREMENTS.
23. LOCATED IN SE ELECTRICAL CLOSET.
24. LOCATED IN ESCALATOR CONTROL ROOM.
25. LOCATED IN ELEVATOR CONTROL ROOM.
26. LOCATED IN SW ELECTRICAL CLOSET.
27. DUE TO UPSIZING THE CABLE FOR VOLTAGE DROP, THE PANEL SHALL BE EQUIPPED WITH ADDITIONAL BUSSING AT MAIN TERMINATION. THE BUSSING SHALL BE SIZED FOR THE LARGER CABLE LUGS. THE PANEL ENCLOSURE SHALL BE INCREASED IN SIZE AS NEEDED FOR THE ADDITIONAL BUS.
28. FRE CONDUIT.
29. FIBERGLASS ENCLOSURE.
30. PROVIDE PLAQUE ON EACH MAIN SERVICE DISCONNECT STATING "EQUIPMENT FED FROM TWO SEPARATE ELECTRIC SERVICES."

1 DIAGRAMS - ELECTRICAL SINGLE LINE DIAGRAM - PART 1
NTS

DESIGN BY:									
DRAWN BY:									
CHECKED BY:									
APPROVED BY:		4	7/3/2023	ISSUED FOR BID	JM	EM	OS		
CDOT/APPROVED BY:		NO.	DATE	REVISIONS	DES.	DRW.	CHK.	DCCO	CDOT

TRANSYSTEMS
222 SOUTH RIVERSIDE PLAZA SUITE 610
CHICAGO, ILLINOIS 60606

SKIDMORE, OWINGS & MERRILL LLP
224 SOUTH MICHIGAN AVENUE, SUITE 1000
CHICAGO, ILLINOIS 60604

FACET ENGINEERING
4316 NORTH ELSTON AVENUE
CHICAGO, ILLINOIS 60641

CHICAGO DEPARTMENT OF TRANSPORTATION
DIVISION OF ENGINEERING

STATE / LAKE LOOP ELEVATED STATION
200 NORTH STATE STREET, CHICAGO, IL 60601

SPEC. NO.

ELECTRICAL SINGLE LINE DIAGRAM - PART 1 OF 3

DRAWING NO.
E-601

CDOT PROJECT D-1-209

DATE: 9/9/2022

REVISION NO.1

SWBD
KIRK KEY OPERATION:

1. M52-N NORMALLY OPENED OR CLOSED
2. T52-NR OPENED TO RELEASE KEY K1 AND LOCK CB OPENED
3. M52-R OPENED TO RELEASE KEY K1 AND LOCK CB OPENED
4. (2) K1 KEYS REQUIRED TO CLOSE GEN TAP BOX CB
5. GEN TAP BOX CB OPENED TO RELEASE 2 KEYS

NOTE: ATC PROGRAM TO DEFEAT AUTO CONTROL OF M52-N, T52-NR, AND M52-R WHEN T52-NR AND M52-R ARE LOCKED OPEN.

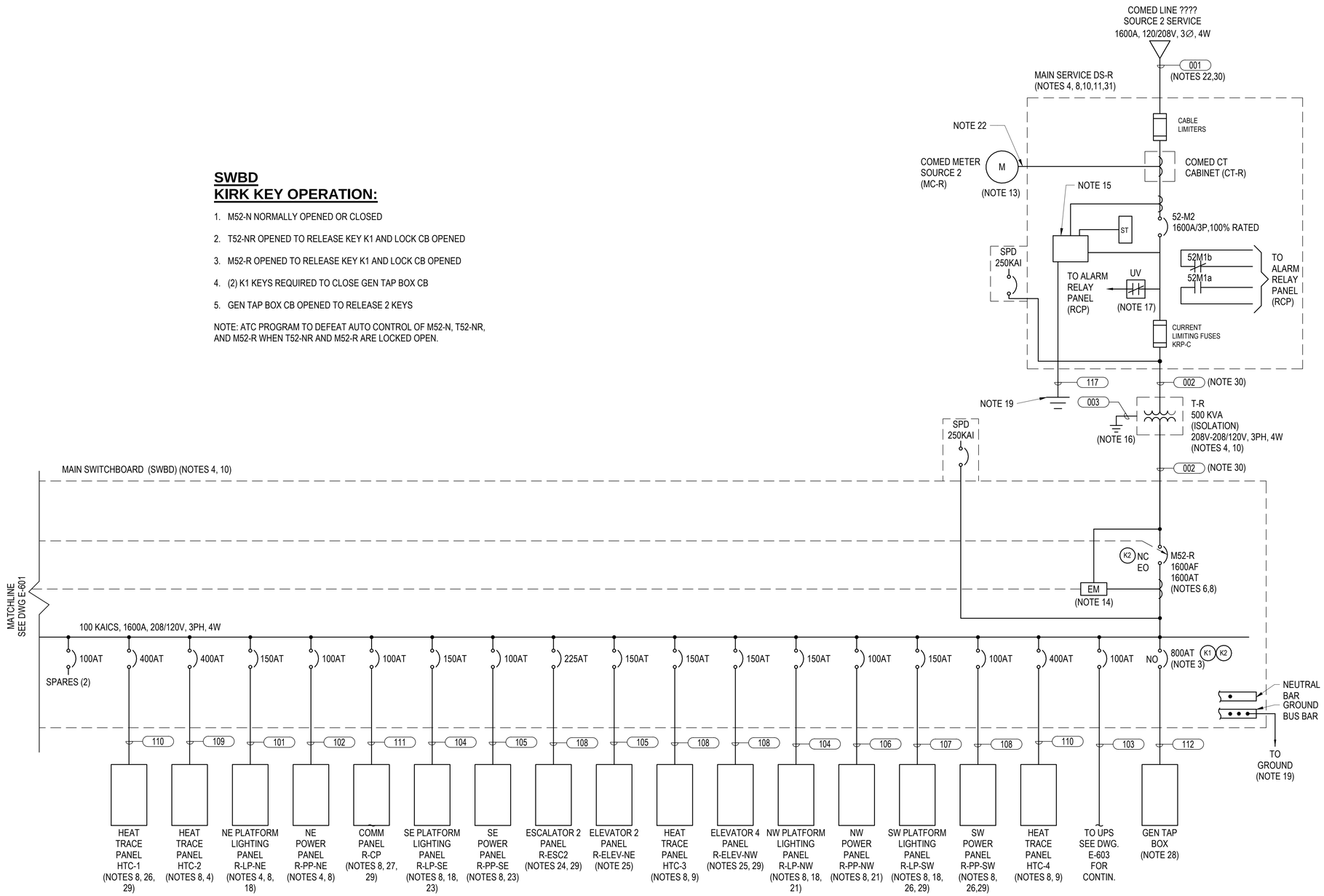

1 DIAGRAMS - ELECTRICAL SINGLE LINE DIAGRAM - PART 2
NTS

NOTES:

1. SEE DRAWING E-001 FOR ELECTRICAL SYMBOL LIST.
2. SEE DRAWING E-002 FOR ELECTRICAL GENERAL NOTES AND ABBREVIATIONS
3. KEY INTERLOCKING TO PREVENT CONCURRENT OPERATION OF COMED ELECTRIC SERVICE POWER AND CTA PORTABLE GENERATOR.
4. LOCATED IN MAIN ELECTRICAL ROOM.
5. SEE DRAWING E-901 FOR EMERGENCY LIGHTING SINGLE LINE DIAGRAM.
6. MAIN AND TIE CIRCUIT BREAKERS SHALL BE PROVIDED WITH LONG TIME, SHORT TIME INSTANTANEOUS, AND GROUND FAULT TRIPPING.
7. ALL CONDUIT TO BE GRC, UNO.
8. PROVIDE N.C. CONTACT FOR OPEN/CLOSE STATUS TO SCADA. REFER TO DRAWING E-629 FOR ITC WIRING DIAGRAM.
9. LOCATED IN STREET LEVEL UTILITY ROOM.
10. FLOOR MOUNTED EQUIPMENT TO BE INSTALLED ON A 4 INCH CONCRETE PAD WITH A 4 INCH LIP. SEE SPECIFICATIONS.
11. ALL EQUIPMENT TO HAVE A MINIMUM RATING OF 65KAIC. SERIES RATED BREAKERS ARE NOT ALLOWED.
12. SIZE ALL CONDUIT AND CABLE PER CEC.
13. LOCATED IN METER CLOSET.
14. "EM" TO INCLUDE ANSI 27/59, 81OU, AND 47 DEVICES AS PART OF THE METER, BREAKER SENSING, OR PROVIDE SEPARATE DEVICES.
15. GROUND FAULT RELAY. SEE DWG E-603.
16. GROUND TO PLATFORM EL STRUCTURE WITH CABLE SIZED AS SHOWN. ALL GROUND CONNECTIONS TO TRACK STRUCTURE SHALL BE EXOTHERMIC WELD.
17. UNDER VOLTAGE SENSING RELAY.
18. PROVIDE SPD PROTECTION LOCATED IN OR NEAR ALL LIGHTING AND EMERGENCY POWER PANELS, SIZED AS REQUIRED.
19. GROUNDING CONDUCTOR CONNECTED TO PERIMETER GROUND BUS.
20. ALL CIRCUIT BREAKERS TO HAVE A MINIMUM RATING OF 65 KAIC OR AS REQUIRED BY POWER STUDY.
21. LOCATED IN NW ELECTRICAL CLOSET.
22. PROVIDE CONDUIT AND WIRES PER COMED REQUIREMENTS.
23. LOCATED IN SE ELECTRICAL CLOSET.
24. LOCATED IN ITS ESCALATOR CONTROL ROOM.
25. LOCATED IN ITS ELEVATOR CONTROL ROOM.
26. LOCATED IN SW ELECTRICAL CLOSET.
27. LOCATED IN COMMUNICATION ROOM.
28. LOCATED AT STREET LEVEL.
29. DUE TO UPSIZING THE CABLE FOR VOLTAGE DROP, THE PANEL SHALL BE EQUIPED WITH ADDITIONAL BUSSING AT MAIN TERMINATION. THE BUSSING SHALL BE SIZED FOR THE LARGER CABLE LUGS. THE PANEL ENCLOSURE SHALL BE INCREASED IN SIZE AS NEEDED FOR THE ADDITIONAL BUS.
30. FRE CONDUIT.
31. FIBERGLASS ENCLOSURE.

DESIGN BY:										
DRAWN BY:										
CHECKED BY:										
APPROVED BY:		4	7/3/2023	ISSUED FOR BID	JM	EM	OS			
CDOT/APPROVED BY:		NO.	DATE	REVISIONS	DES.	DRW.	CHK.	DCCO	CDOT	

TRANSYSTEMS
222 SOUTH RIVERSIDE PLAZA SUITE 610
CHICAGO, ILLINOIS 60606

SKIDMORE, OWINGS & MERRILL LLP
224 SOUTH MICHIGAN AVENUE, SUITE 1000
CHICAGO, ILLINOIS 60604

FACET ENGINEERING
4316 NORTH ELSTON AVENUE
CHICAGO, ILLINOIS 60641

CHICAGO DEPARTMENT OF TRANSPORTATION
DIVISION OF ENGINEERING

STATE / LAKE LOOP ELEVATED STATION
200 NORTH STATE STREET, CHICAGO, IL 60601

SPEC. NO.

ELECTRICAL SINGLE LINE DIAGRAM - PART 2 OF 3

DRAWING NO.
E-602

CDOT PROJECT D-1-209 | DATE: 9/9/2022 | REVISION NO.1

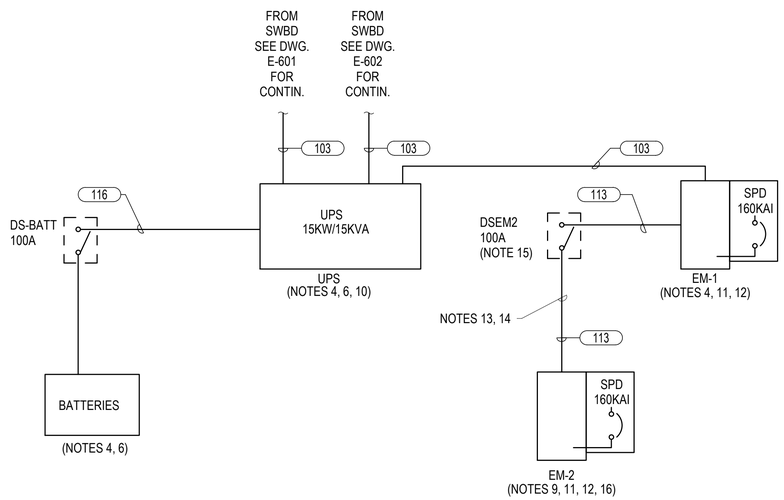

1 DIAGRAMS - ELECTRICAL SINGLE LINE DIAGRAM - EMERGENCY POWER

NTS

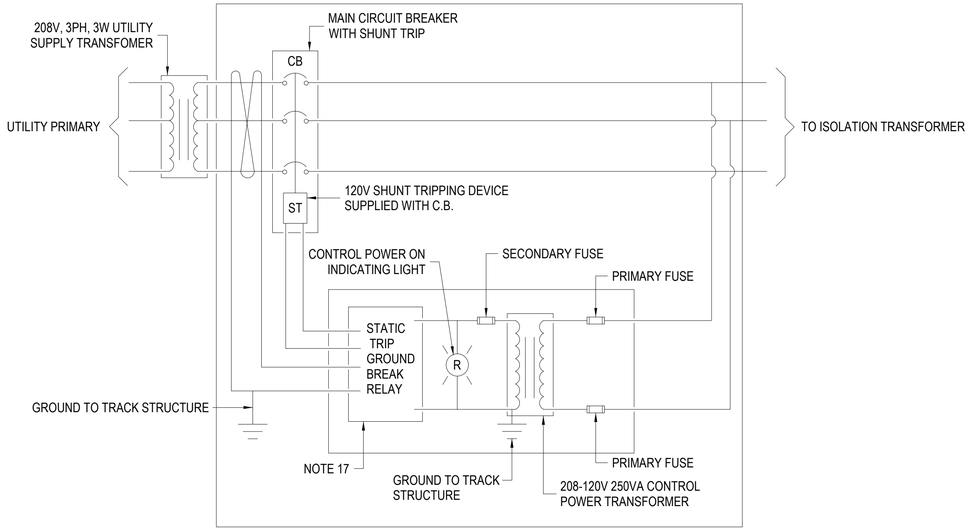

2 GROUND RELAY DETAIL

NTS

NOTES:

1. SEE DRAWING E-001 FOR ELECTRICAL SYMBOL LIST.
2. SEE DRAWING E-002 FOR ELECTRICAL GENERAL NOTES AND ABBREVIATIONS
3. ALL CONDUIT TO BE GRC, UNO..
4. LOCATED IN MAIN ELECTRICAL ROOM.
5. SEE DRAWING E-901 FOR EMERGENCY LIGHTING SINGLE LINE DIAGRAM.
6. FLOOR MOUNTED EQUIPMENT TO BE INSTALLED ON A 4 INCH CONCRETE PAD WITH A 4 INCH LIP. SEE SPECIFICATIONS.
7. ALL EQUIPMENT TO HAVE A MINIMUM RATING OF 65KAIC. SERIES RATED BREAKERS ARE NOT ALLOWED.
8. SIZE ALL CONDUIT AND CABLE PER CEC.
9. LOCATED IN SW ELECTRICAL CLOSET.
10. GROUND TO PLATFORM EL STRUCTURE WITH CABLE SIZED AS SHOWN.
11. PROVIDE SPD PROTECTION LOCATED IN OR NEAR ALL LIGHTING AND EMERGENCY POWER PANELS, SIZED AS REQUIRED.
12. ALL CIRCUIT BREAKERS TO HAVE A MINIMUM RATING OF 65 KAIC OR AS REQUIRED BY POWER STUDY.
13. PROVIDE ELECTRICAL GROUND ISOLATION BETWEEN STATION AND PLATFORM STRUCTURES.
14. PROVIDE FLEXIBLE METAL CONDUITS OUTSIDE OF STATION FOR ALL RACEWAYS EXITING/ENTERING STATION FROM PLATFORM FOR USE AS EXPANSION/DEFLECTION CONNECTION.
15. DUE TO UPSIZING THE CABLE FOR VOLTAGE DROP, THE DISCONNECT SHALL BE EQUIPED WITH ADDITIONAL BUSSING AT TERMINATION. THE BUSSING SHALL BE SIZED FOR THE LARGER CABLE LUGS. THE DISCONNECT ENCLOSURE SHALL BE INCREASED IN SIZE AS NEEDED FOR THE ADDITIONAL BUS.
16. DUE TO UPSIZING THE CABLE FOR VOLTAGE DROP, THE PANEL SHALL BE EQUIPED WITH ADDITIONAL BUSSING AT MAIN TERMINATION. THE BUSSING SHALL BE SIZED FOR THE LARGER CABLE LUGS. THE PANEL ENCLOSURE SHALL BE INCREASED IN SIZE AS NEEDED FOR THE ADDITIONAL BUS.
17. SOLID STATE GROUND CURRENT SENSING RELAY WITH ADJUSTABLE TRIP RANGE 2-24 AMPS WITH AN ADJUSTABLE TIME DELAY. INCLUDE BUILT-IN TEST BUTTON, INDEPENDANT POSITIVE TARGET INDICATOR AND TARGET RESET.

DESIGN BY:										
DRAWN BY:										
CHECKED BY:										
APPROVED BY:		4	7/3/2023	ISSUED FOR BID	EM	EM	JM			
CDOT/APPROVED BY:		NO.	DATE	REVISIONS	DES.	DRW.	CHK.	DCCO	CDOT	

TRANSYSTEMS
222 SOUTH RIVERSIDE PLAZA SUITE 610
CHICAGO, ILLINOIS 60606

SKIDMORE, OWINGS & MERRILL LLP
224 SOUTH MICHIGAN AVENUE, SUITE 1000
CHICAGO, ILLINOIS 60604

FACET ENGINEERING
DBE/MBE CERTIFIED
Performance • Respect • Initiation • Dedication • Experience
FACET ENGINEERING
4316 NORTH ELSTON AVENUE
CHICAGO, ILLINOIS 60641

CHICAGO DEPARTMENT OF TRANSPORTATION
DIVISION OF ENGINEERING

STATE / LAKE LOOP ELEVATED STATION
200 NORTH STATE STREET, CHICAGO, IL 60601

SPEC. NO.

ELECTRICAL SINGLE LINE DIAGRAM - PART 3 OF 3

DRAWING NO.
E-603

CDOT PROJECT D-1-209

DATE: 9/9/2022

REVISION NO.

LIGHTING FIXTURE SCHEDULE

Type Mark	DESCRIPTION	MODEL NUMBER	LAMP TYPE	VOLTAGE	Wattage	LUMENS	MOUNTING	NOTES
F1A	6" X 4' LED TYPE FIXTURE MOUNTED IN RACEWAY. TILTED 30 DEGREES TOWARDS OUTSIDE EDGE OF PLATFORM	HYDREL, HLF501 750LMF 90CRI 30X60 40K 4FT, OR APPROVED EQUAL	LED	120V	28 W	2412	MOUNTED IN CONTINUOUS PLATFORM RACEWAY	NOTES 1, 3, 4
F1B	6" X 4' LED TYPE FIXTURE MOUNTED IN RACEWAY. ASSYMETRIC THROW OF LIGHT TOWARDS EDGE OF PLATFORM	HYDREL, HLF501 750LMF 90CRI WWD 40K 4FT, OR APPROVED EQUAL	LED	120V	28 W	1881	MOUNTED IN CONTINUOUS PLATFORM RACEWAY	NOTES 1, 3, 4
F2	6" X 4' LED LIGHT WITH TYPE 304 STAINLESS STEEL HOUSING	ECLIPSE: SMS6 4' FCM LED45 4K EBU 82 ASH D7 SS FUSE	LED	120V	45W	3842	SURFACE MOUNTED ON RATED CEILING	
F3	6" X 4', LED TYPE FIXTURE IN FLYOVER. S.S. ENCLOSURE, TILTED 30 DEGREES	HYDREL, HLF501 600LMF 90CRI 60X60 40K 4FT OR APPROVED EQUAL	LED	120V	25 W	2000	SURFACE MOUNTED IN S.S. ENCLOSURE TO RACEWAY	-
F4	6" X 4', LED TYPE FIXTURE SURFACE MOUNTED IN S.S. ENCLOSURE ON HISTORIC CANOPY	HYDREL, HLF501 450LMF 90CRI 60X60 40K 3FT OR APPROVED EQUAL	LED	120V	13 W	1350	SURFACE MOUNTED	-
F5A	6" X 4', LED TYPE FIXTURE SURFACE MOUNTED TO CANOPY IN S.S. ENCLOSURE TO RACEWAY LOCATED IN UNPAID AREA, TILTED 30 DEGREES	HYDREL, HLF501 1000LMF 90CRI 60X60 40K 4FT OR APPROVED EQUAL	LED	120V	33 W	2772	SURFACE MOUNTED TO CANOPY IN S.S. ENCLOSURE TO RACEWAY LOCATED IN UNPAID AREA	-
F6	6" X 4' LED TYPE FIXTURE MOUNTED IN CAK CEILING SYSTEM	HYDREL, HLF501 750LMF 90CRI 30X60 40K 4FT, OR APPROVED EQUAL	LED	120V	28 W	2412	MOUNTED IN CAK CEILING SYSTEM	-
F7	6" X 1', LED TYPE FIXTURE IN STAIRWAY/ESCALATOR. S.S. ENCLOSURE, TILTED 30 DEGREES	INSIGHT LIGHTING,ME LO 40K 6060 SM 12 UNV ## FUSE OR APPROVED EQUAL	LED	120V	3.5	450	SURFACE MOUNTED IN RACEWAY ENCLOSURE TO RACEWAY	-
F12	4', DIRECT/INDIRECT, WALL MOUNT	PHILIPS: SF 4 V C 38A 40 U DZT US GLR	LED	120V	52.5 W	3828	WALL	-
F13	6" X 4' LED TYPE PIT VANDAL RESISTANT LIGHT FIXTURE	NEW STAR LIGHTING: VIC4N-L2401C-RWC-12-WH-FZ-DM	LED	120V	60		WALL	
F14	8" X 9" END OF PLATFORM POLE MOUNTED FLOOD LIGHT AT A 30 DEG TILT, IP66 RATED	LITHONIA: DSXF1 LED P2 40K HMF IS UBV VISOR	LED	120V	21W	2575	POLE MOINTED 12 FT ABOVE PLATFORM	NOTE 10
F15	ASSYMETRIC HANDRAIL LIGHTING WITH DRIVER BUILT IN TO RAILING POST	WAGNER, LULR 90 40K A 5 WITH LUMEN POST: LUPOST OR APPROVED EQUAL	LED	120V	150W	122LM/W	HANDRAIL LIGHTING WITH DRIVER BUILT IN TO RAILING POST	-
F18	4' IMPERATIVE LIGHT WALL, MTD ON SILL AND HEAD OF WALL,INTEGRAL DRIVER	INSIGHT LIGHTING,ME LO 40K 2020 SM 12 UNV ## FUSE OR APPROVED EQUAL	LED	120V	72 W	450	SURFACE	-
F21	6" X 4' LED LIGHT WITH TYPE 304 STAINLESS STEEL HOUSING	NEW STAR LIGHTING: VIC4N-L1401-RW-UN-SS-LW-FZ1	LED	120V	51W	2800	SURFACE	
F22A	6" X 4' LED LIGHT WITH TYPE 304 STAINLESS STEEL HOUSING	NEW STAR LIGHTING: VIC4N-L2401-RW-UN-SS-ST-FZ1	LED	120V	51W	5600	SURFACE	
F22B	6" X 4' LED LIGHT WITH TYPE 304 STAINLESS STEEL HOUSING WITH 30DEG TILT UP	NEW STAR LIGHTING: VIC4N-L2401-RW-UN-SS-ST-FZ1-CM	LED	120V	51W	5600	WALL	

EMERGENCY / EXIT SYMBOL LIST

TYPE	SYMBOL	DESCRIPTION	MANUFACTURER & CATALOG NUMBER	NUMBER OF LAMPS	LAMP TYPE & WATTAGE	VOLTAGE	MOUNTING	MOUNTING HEIGHT	NOTES
#3		EXIT SIGN, ELECTRIC, 120 VOLT, LED LIGHT SOURCE, GLASS PANEL, CHICAGO CODE APPROVED, EMERGENCY BACK-UP POWER	BIG BEAM: ECXLN2RWW-SS-TP-HTR12O-TM OR APPROVED EQUAL	LED ARRAY	LED 3.7W	120	VARIES	SEE ARCH. DWGS	1, 2, 3
#6		EXIT SIGN, ELECTRIC, 120 VOLT, LED LIGHT SOURCE, RIGHT ARROW, GLASS PANEL, CHICAGO CODE APPROVED, EMERGENCY BACK-UP POWER	BIG BEAM: ECXLN2RWW-SS-TP-HTR12O-TM-AR OR APPROVED EQUAL	LED ARRAY	LED 3.7W	120	VARIES	SEE ARCH. DWGS	1, 2, 3
#9		EXIT SIGN, ELECTRIC, 120 VOLT, LED LIGHT SOURCE, LEFT ARROW, GLASS PANEL, CHICAGO CODE APPROVED, EMERGENCY BACK-UP POWER	BIG BEAM: ECXLN2RWW-SS-TP-HTR12O-TM-AL OR APPROVED EQUAL	LED ARRAY	LED 3.7W	120	VARIES	SEE ARCH. DWGS	1, 2, 3
#18		EXIT SIGN, ELECTRIC, 120 VOLT, LED LIGHT SOURCE, DOUBLE FACE ARROW, GLASS PANEL, CHICAGO CODE APPROVED, EMERGENCY BACK-UP POWER	BIG BEAM: ECXLN2RWW-SS-TP-HTR12O-TM-ARAL/ARAR OR APPROVED EQUAL	LED ARRAY	LED 3.7W	120	VARIES	SEE ARCH. DWGS	1, 2, 3
#2A		STAIR EXIT SIGN, ELECTRIC, 120 VOLT, LED LIGHT SOURCE, GLASS PANEL, CHICAGO CODE APPROVED, EMERGENCY BACK-UP POWER	BIG BEAM: ECXLN2RWW-SS-TP-HTR12O-TM OR APPROVED EQUAL	LED ARRAY	LED 3.7W	120	VARIES	SEE ARCH. DWGS	1, 2, 3
#20		STAIRWAY SIGN, ELECTRIC, 120 VOLT, LED LIGHT SOURCE, DOUBLE FACE ARROW, GLASS PANEL, CHICAGO CODE APPROVED, EMERGENCY BACK-UP POWER	BIG BEAM: ECXLN2RWW-SS-TP-HTR12O-TM-ARAL/ARAR OR APPROVED EQUAL	LED ARRAY	LED 3.7W	120	VARIES	SEE ARCH. DWGS	1, 2, 3

CITY OF CHICAGO EXIT SIGN CODES

	SINGLE FACE EXIT	DOUBLE FACE EXIT	SINGLE FACE STAIRWAY	DOUBLE FACE STAIRWAY	SINGLE FACE STAIR	DOUBLE FACE STAIR
NO ARROWS	3	18	2	17	2A	17A
ARROW RIGHT	6	21	5	20	5A	20A
ARROW LEFT	9	21	8	20	8A	20A
DOUBLE ARROW	12	24	11	23	11A	23A

NOTES:

1. SEE SPECIFICATIONS FOR ADDITIONAL REQUIREMENTS.
2. EXIT SIGN TYPE TO BE PROVIDED TO MEET THE CITY OF CHICAGO REQUIREMENTS. SEE PLANS FOR SPECIFIC TYPE LETTER CODE.
3. PROVIDE STAINLESS STEEL FINISH.
4. LIGHTING FIXTURE MANUFACTURER TO PROVIDE CUSTOM STAINLESS STEEL ENCLOSURE WITH INTERNAL WIREWAYS. REFER TO DETAIL 7 ON DRAWING E-506 AND ARCHITECTURAL DRAWINGS FOR ADDITIONAL DETAILS.
5. MINIMUM EFFICACY OF 85 LM/W DELIVERED.
6. 4000K COLOR TEMPERATURE
7. SHALL BE MINIMUM IP-64 RATED, FOR INTERIOR FIXTURES, AND MINIMUM IP-65 RATED, FOR EXTERIOR AND PLATFORM FIXTURES.
8. FIXTURES MOUNTED 10' AFF AND BELOW SHALL BE VANDAL RESISTANT. FIXTURES MOUNTED MORE THAN 10' AFF NOT REQUIRED TO BE VANDAL RESISTANT.
9. FIXTURES SHOWN WITH CATALOG NUMBER ARE BASIS OF DESIGN. ALL ACCEPTABLE EQUAL FIXTURES TO MEET PERFORMANCE, QUALITY, AND AESTHETICS REQUIREMENTS.
10. CONTRACTOR TO FIELD ADJUST THE ORIENTATION OF POLE MOUNTED LIGHT FIXTURE AND TO BE APPROVED BY ENGINEER.

DESIGN BY:									
DRAWN BY:									
CHECKED BY:									
APPROVED BY:		4	7/3/2023	ISSUED FOR BID	JM	EM	OS		
CDOT/APPROVED BY:		NO.	DATE	REVISIONS	DES.	DRW.	CHK.	DCCO	CDOT

TRANSYSTEMS
222 SOUTH RIVERSIDE PLAZA SUITE 610
CHICAGO, ILLINOIS 60606

SKIDMORE, OWINGS & MERRILL LLP
224 SOUTH MICHIGAN AVENUE, SUITE 1000
CHICAGO, ILLINOIS 60604

FACET ENGINEERING
4316 NORTH ELSTON AVENUE
CHICAGO, ILLINOIS 60641

CHICAGO DEPARTMENT OF TRANSPORTATION
DIVISION OF ENGINEERING

STATE / LAKE LOOP ELEVATED STATION
200 NORTH STATE STREET, CHICAGO, IL 60601

SCHEDULES - LIGHTING FIXTURES

CDOT PROJECT D-1-209 | DATE: 9/9/2022

SPEC. NO.

DRAWING NO. E-604

REVISION NO.

LOAD CALCULATION FOR BUILDING SERVICE (Source 1)

Prepared By: FACET ENGINEERING, LLC
4316 N. Elston Avenue
Chicago, IL 60641

Building Description CDOT CTA State and Lake EL Station

Available Fault Current: 100 KAIC @ 208V

Type of Electrical Service: 208/120V, 3 PHASE, 4 WIRE

Size of Service Entrance Conductors: SEE DRAWINGS

Size of Grounding Electrode: SEE DRAWINGS

Size of O.C.P. 1600A/3P @208 Volts

GENERAL LIGHTING LOAD CALCULATION:

	Sq-Ft/Unit	Units	VA		Sub Totals
General Lighting Load:					
Lighting Load (Normal and Reliable)	24000	1.000	24,000.0		24,000.00 VA
Emergency Lighting Load	1	1	3,600.0		3,600.00 VA
Site Lighting		1	1,200.0		1,200.00 VA
				Total VA	*28,800.00* VA

SECTION 1
GENERAL LIGHTING LOAD DEMAND FACTOR:

ALL AT 100%		*Total VA*	*28,800.00* VA

SECTION 2
STATION LOAD:

		Units/Quantity	VA	Demand Fact	Sub Totals	
ELEVATOR 25 HP WalkOver (All Loads)		2	30,289.5	0.95	57,550.03	VA
ELEVATOR 25 HP Street to Platform (All Loads)		4	30,289.5	0.85	102,984.27	VA
ESCALATOR 40 HP (All Loads)		2	57,720.8	1	115,441.60	VA
SIGNAGE		24	100.0	1	2,400.00	VA
MECH HEATERS (est 4-8kw, 8-1kw, 2@4KW, 2@3.7KW)		1	53,400.0	1	53,400.00	VA
MECH EXH FANS/LOUVERS		1	8,000.0	1	8,000.00	VA
MECH AC LOADS (See Note below)		0	0.0	0	-	VA
INFARED HEATERS		16	3,200.0	1	51,200.00	VA
HEAT TRACING (HT)		2	22,000.0	1	44,000.00	VA
SUMP PUMPS		6	1,925.0	1	11,550.00	VA
COMM EQUIP (CP)		1	17,512.0	1	17,512.00	VA
REVENUE EQUIP (FCEP)		1	10,600.0	1	10,600.00	VA
RECEPTACLE/MISC		1	3,644.0	1	3,644.00	VA
WATER HEATER		1	6000.0	1	6,000.00	VA
Since Heating overall building is larger load we do not take into account Cooling loads				*Total VA*	*484,281.90*	VA

SECTION 3

25% Continous Load (Lighting)	28,800.0	0.25	7,200.00	VA
25% of Largest Motor (Escalator) (40 HP)	43,180.8	0.25	10,795.20	VA
		Total VA	*17,995.20*	VA

Total From Section 1	28,800.00	VA
Total From Section 2	484,281.90	VA
Total From Section 3	17,995.20	VA
TOTAL VA	531,077.10	
TOTAL AMPS	1,474.17	

On a 120/208V, 3 phase, 4 Wire System

LOAD CALCULATION FOR BUILDING SERVICE (Source 2)

Prepared By: FACET ENGINEERING, LLC
4316 N. Elston Avenue
Chicago, IL 60641

Building Description CDOT CTA State and Lake EL Station

Available Fault Current: 100 KAIC @ 208V

Type of Electrical Service: 208/120V, 3 PHASE, 4 WIRE

Size of Service Entrance Conductors: SEE DRAWINGS

Size of Grounding Electrode: SEE DRAWINGS

Size of O.C.P. 1600A/3P @208 Volts

GENERAL LIGHTING LOAD CALCULATION:

	Sq-Ft/Unit	Units	VA		Sub Totals
General Lighting Load:					
Lighting Load (Normal and Reliable)	24000	1.000	24,000.0		24,000.00 VA
Emergency Lighting Load	1	1	3,600.0		3,600.00 VA
Site Lighting		1	1,200.0		1,200.00 VA
				Total VA	*28,800.00* VA

SECTION 1
GENERAL LIGHTING LOAD DEMAND FACTOR:

ALL AT 100%		*Total VA*	*28,800.00* VA

SECTION 2
STATION LOAD:

		Units/Quantity	VA	Demand Fact	Sub Totals	
ELEVATOR 25 HP WalkOver (All Loads)		2	30,289.5	0.95	57,550.03	VA
ELEVATOR 25 HP Street to Platform (All Loads)		4	30,289.5	0.85	102,984.27	VA
ESCALATOR 40 HP (All Loads)		2	57,720.8	1	115,441.60	VA
SIGNAGE		24	100.0	1	2,400.00	VA
MECH HEATERS (est 4-8kw, 8-1kw, 2@4KW, 2@3.7KW)		1	53,400.0	1	53,400.00	VA
MECH EXH FANS/LOUVERS		1	8,000.0	1	8,000.00	VA
MECH AC LOADS (See Note below)		0	0.0	0	-	VA
INFARED HEATERS		16	3,200.0	1	51,200.00	VA
HEAT TRACING (HT)		2	22,000.0	1	44,000.00	VA
SUMP PUMPS		6	1,925.0	1	11,550.00	VA
COMM EQUIP (CP)		1	17,512.0	1	17,512.00	VA
REVENUE EQUIP (FCEP)		1	10,600.0	1	10,600.00	VA
RECEPTACLE/MISC		1	3,644.0	1	3,644.00	VA
WATER HEATER		1	6000.0	1	6,000.00	VA
Since Heating overall building is larger load we do not take into account Cooling loads				*Total VA*	*484,281.90*	VA

SECTION 3

25% Continous Load (Lighting)	28,800.0	0.25	7,200.00	VA
25% of Largest Motor (Escalator) (40 HP)	43,180.8	0.25	10,795.20	VA
		Total VA	*17,995.20*	VA

Total From Section 1	28,800.00	VA
Total From Section 2	484,281.90	VA
Total From Section 3	17,995.20	VA
TOTAL VA	531,077.10	
TOTAL AMPS	1,474.17	

On a 120/208V, 3 phase, 4 Wire System

DESIGN BY:									
DRAWN BY:									
CHECKED BY:									
APPROVED BY:		4	7/3/2023	ISSUED FOR BID	JM	EM	SM		
CDOT/APPROVED BY:		NO.	DATE	REVISIONS	DES.	DRW.	CHK.	DCCO	CDOT

TRANSYSTEMS
222 SOUTH RIVERSIDE PLAZA SUITE 610
CHICAGO, ILLINOIS 60606

SKIDMORE, OWINGS & MERRILL LLP
224 SOUTH MICHIGAN AVENUE, SUITE 1000
CHICAGO, ILLINOIS 60604

FACET ENGINEERING
DBE/MBE CERTIFIED
Performance • Respect • Initiation • Dedication • Experience
FACET ENGINEERING
4316 NORTH ELSTON AVENUE
CHICAGO, ILLINOIS 60641

CHICAGO DEPARTMENT OF TRANSPORTATION
DIVISION OF ENGINEERING

STATE / LAKE LOOP ELEVATED STATION
200 NORTH STATE STREET, CHICAGO, IL 60601

SCHEDULES - CITY LOAD CALCULATIONS

CDOT PROJECT D-1-209 | DATE: 9/9/2022

SPEC. NO.

DRAWING NO. E-610

REVISION NO.

CABLE AND CONDUIT SCHEDULE

TAG NUMBER	SETS	CABLE DESCRIPTION	CONDUIT (QTY) SIZE (NOTE 7)	NOTES
001	4	4 600 KCMIL	(4) 5"	NOTES 4,5,6,8
002	4	4 600 KCMIL + 1 #1/0 AWG (G)	(4) 4"	NOTE 4
003	1	1 #300 KCMIL	2"	
101	1	4 #1/0 AWG + 1 #6 AWG (G)	2"	
102	1	4 #3 AWG + 1 #8 AWG (G)	1-1/2"	
103	1	4 #3 AWG + 1 #8 AWG (G)	1-1/2"	
104	1	4 #4/0 AWG + 1 #4 AWG (G)	2"	
105	1	4 #2/0 AWG + 1 #6 AWG (G)	2"	
106	1	4 #2/0 AWG + 1 #6 AWG (G)	2"	
107	1	4 400KCMIL + 1 #3 AWG (G)	3"	
108	1	4 250 KCMIL + 1 #4 AWG (G)	2-1/2"	
109	1	4 600 KCMIL + 1 #3 AWG (G)	4"	
110	2	4 300 KCMIL + 1 #4 AWG (G)	(2) 2-1/2"	
111	1	4 #250 AWG + 1 #4 AWG (G)	2-1/2"	
112	2	4 #600 KCMIL + 1 #2 AWG (G)	(2) 5"	
113	1	4 250 KCMIL + 1 #4 AWG (G)	2-1/2"	
114	1	4 #3/0 AWG + 1 #6 AWG (G)	2"	
115	1	4 300 KCMIL + 1 #4 AWG (G)	2-1/2"	
116	1	2 #4 AWG + 1 #8 AWG (G)	1"	
117	1	1 #10 AWG	3/4"	
301	1	2 #12AWG + 1 #1AWG G.	3/4"	
304	1	4 #12AWG + 1 #1AWG G.	3/4"	
320	1	4-CAT6 AND 2MM FO	1"	
325	1	CAT6	3/4"	
326	1	2-CAT6	1"	
330	2	EMPTY WITH PULL STRING	(2) 1"	

NOTES:

1. SEE DRAWING E-001 FOR ELECTRICAL SYMBOL LIST.
2. SEE DRAWING E-002 FOR ELECTRICAL GENERAL NOTES AND ABBREVIATIONS.
3. PVC COATED CONDUIT.
4. FRE CONDUIT.
5. CONCRETE ENCASED REINFORCED DUCTBANK WHERE INSTALLED UNDERGROUND.
6. PVC SCHEDULE 80 CONDUIT WHERE INSTALLED UNDERGROUND UNDER ROADWAY.
7. THE CONDUITS LISTED INCLUDES QUANTITY OF CONDUITS IN PARENTHESIS FOLLOWED BY THE SIZE IN INCHES.
8. SEE DETAIL 1 ON DRAWING E-585 FOR CONDUIT AND DUCTBANK DETAILS.
10. SEE DETAIL 6 ON DRAWING E-506 FOR CONDUIT MOUNTING DETAIL.

DESIGN BY:									
DRAWN BY:									
CHECKED BY:									
APPROVED BY:		4	7/3/2023	ISSUED FOR BID	JM	EM	OS		
CDOT/APPROVED BY:		NO.	DATE	REVISIONS	DES.	DRW.	CHK.	DCCO	CDOT

TRANSYSTEMS
222 SOUTH RIVERSIDE PLAZA SUITE 610
CHICAGO, ILLINOIS 60606

SKIDMORE, OWINGS & MERRILL LLP
224 SOUTH MICHIGAN AVENUE, SUITE 1000
CHICAGO, ILLINOIS 60604

FACET ENGINEERING
4316 NORTH ELSTON AVENUE
CHICAGO, ILLINOIS 60641

CHICAGO DEPARTMENT OF TRANSPORTATION
DIVISION OF ENGINEERING

STATE / LAKE LOOP ELEVATED STATION
200 NORTH STATE STREET, CHICAGO, IL 60601

SCHEDULES - CABLE AND CONDUIT

CDOT PROJECT D-1-209

DATE: 9/9/2022

SPEC. NO.

DRAWING NO. E-611

REVISION NO. 1

ELECTRICAL EQUIPMENT SCHEDULE

Tag No.	Location	Voltage	Phase Wire	Neutral Wire	Ground Wire	Total Wire	HP	FLA	KW	Panel	Circuit No.	Cable/Conduit
AC-1-1	ELEV MACH RM 001	208 V	2	0	1	3	-	0.0 A		N-ELEV-NE	8,10	2#12AWG AND 1 #12AWG G IN 3/4" C
AC-1-2	ELEV MACH RM 011	208 V	2	0	1	3	-	0.0 A		N-ELEV-SE	8,10	2#12AWG AND 1 #12AWG G IN 3/4" C
AC-1-3	ESC CONTROL RM 002	208 V	2	0	1	3	-	0.0 A		N-ESC1	20,22	2#12AWG AND 1 #12AWG G IN 3/4" C
AC-1-4	ESC CONTROL RM 012	208 V	2	0	1	3	-	0.0 A		R-ESC2	20,22	2#12AWG AND 1 #12AWG G IN 3/4" C
AC-2-1	ELEV MACH RM 101	208 V	2	0	1	3	-	0.0 A		N-ELEV-NW	10,12	2#12AWG AND 1 #12AWG G IN 3/4" C
AC-2-2	ELEV MACH RM 111	208 V	2	0	1	3	-	0.0 A		N-ELEV-SW	10,12	2#12AWG AND 1 #12AWG G IN 3/4" C
AC-2-3	CAK 107	208 V	2	0	1	3	-	0.0 A		N-PP-NW	11,13	2#10AWG AND 1 #12AWG G IN 3/4" C
AC-2-4	CAK 117	208 V	2	0	1	3	-	0.0 A		N-PP-SE	10,12	2#10AWG AND 1 #12AWG G IN 3/4" C
AC-M-1	COMM ROOM 201	208 V	2	0	1	3	-	0.0 A		R-CP	30,32	SEE CU-M-1
AC-M-2	COMM ROOM 201	208 V	2	0	1	3	-	0.0 A		R-CP	29,31	SEE CU-M-2
AC-M-3	ELEC RM 203	208 V	2	0	1	3	-	0.0 A		N-PP-NE	3,5	2#8AWG AND 1 #10AWG G IN 3/4" C
AC-M-4	ELEC RM 203	208 V	2	0	1	3	-	0.0 A		N-PP-NE	4,6	2#8AWG AND 1 #10AWG G IN 3/4" C
ATM-NORTH	NORTH PLATFORM UNPAID	120 V	1	1	1	3	-	5.0 A		N-PP-NW	12	-
ATM-SOUTH	SOUTH PLATFORM UNPAID	120 V	1	1	1	3	-	5.0 A		N-PP-SE	15	-
CELL CHGR-NORTH	NORTH PLATFORM UNPAID	120 V	1	1	1	3	-	5.0 A		N-PP-NW	14	-
CELL CHGR-SOUTH	SOUTH PLATFORM UNPAID	120 V	1	1	1	3	-	5.0 A		N-PP-SE	16	-
CU-1-1	TOILET ROOF 104	208 V	2	0	1	3	-	25.0 A		N-ELEV-NE	8,10	2#10AWG AND 1 #12AWG G IN 3/4" C
CU-1-2	TOILET ROOF 114	208 V	2	0	1	3	-	25.0 A		N-ELEV-SE	8,10	2#10AWG AND 1 #12AWG G IN 3/4" C
CU-1-3	ESC CONTROL RM 002	208 V	2	0	1	3	-	25.0 A		N-ESC1	20,22	2#10AWG AND 1 #12AWG G IN 3/4" C
CU-1-4	ESC CONTROL RM 012	208 V	2	0	1	3	-	25.0 A		R-ESC2	20,22	2#10AWG AND 1 #12AWG G IN 3/4" C
CU-2-1	TOILET ROOF 104	208 V	2	0	1	3	-	25.0 A		N-ELEV-NW	10,12	2#10AWG AND 1 #12AWG G IN 3/4" C
CU-2-2	TOILET ROOF 114	208 V	2	0	1	3	-	25.0 A		N-ELEV-SW	10,12	2#10AWG AND 1 #12AWG G IN 3/4" C
CU-2-3	ESC CONTROL RM 002	208 V	2	0	1	3	-	16.0 A		N-PP-NW	11,13	2#8AWG AND 1 #10AWG G IN 3/4" C
CU-2-4	ESC CONTROL RM 012	208 V	2	0	1	3	-	16.0 A		N-PP-SE	10,12	2#8AWG AND 1 #10AWG G IN 3/4" C
CU-M-1	COMM ROOM 201	208 V	2	0	1	3	-	25.0 A		R-CP	30,32	2#8AWG AND 1 #10AWG G IN 3/4" C
CU-M-2	COMM ROOM 201	208 V	2	0	1	3	-	25.0 A		R-CP	29,31	2#8AWG AND 1 #10AWG G IN 3/4" C
CU-M-3	ELEC RM 203	208 V	2	0	1	3	-	25.0 A		N-PP-NE	3,5	2#8AWG AND 1 #10AWG G IN 3/4" C
CU-M-4	ELEC RM 203	208 V	2	0	1	3	-	25.0 A		N-PP-NE	4,6	2#8AWG AND 1 #10AWG G IN 3/4" C
DBP-1	UTILITY ROOM 003	208 V	3	0	1	4	2	7.5 A		R-PP-NE	2,4,6	3#10AWG AND 1 #12AWG G IN 3/4" C
DBP-2	UTILITY ROOM 013	208 V	3	0	1	4	2	7.5 A		R-PP-SE	3,5,7	3#10AWG AND 1 #12AWG G IN 3/4" C
ECH-1-1	NE ELEV PIT	208 V	3	0	1	4	-	11.1 A	4	N-ELEV-NE	13,15,17	3#12AWG AND 1 #12AWG G IN 3/4" C
ECH-1-2	SE ELEV PIT	208 V	3	0	1	4	-	11.1 A	4	N-ELEV-SE	13,15,17	3#12AWG AND 1 #12AWG G IN 3/4" C
ECH-2-1	JAN CLOSET 103	208 V	3	0	1	4	-	8.7 A	3	HP-2	7,9,11	3#10AWG AND 1 #12AWG G IN 3/4" C
ECH-2-2	JAN CLOSET 113	208 V	3	0	1	4	-	8.7 A	3	HP-1	12,14,16	3#8AWG AND 1 #10AWG G IN 3/4" C
ECH-2-3	TOILET 104	208 V	3	0	1	4	-	11.1 A	4	HP-2	12,14,16	3#8AWG AND 1 #10AWG G IN 3/4" C
ECH-2-4	TOILET 114	208 V	3	0	1	4	-	11.1 A	4	HP-1	13,15,17	3#10AWG AND 1 #12AWG G IN 3/4" C
ECH-2-5	CAK 107	208 V	3	0	1	4	-	8.3 A	3	HP-2	18,20,22	3#10AWG AND 1 #12AWG G IN 3/4" C
ECH-2-6	CAK 117	208 V	3	0	1	4	-	8.3 A	3	HP-1	20,22,24	3#10AWG AND 1 #12AWG G IN 3/4" C
ECH-M-1	COMM ROOM 201	208 V	3	0	1	4	-	11.1 A	4	R-CP	33,35,37	2#10AWG AND 1 #12AWG G IN 3/4" C
ECH-M-2	COMM ROOM 201	208 V	3	0	1	4	-	11.1 A	4	R-CP	34,36,38	2#10AWG AND 1 #12AWG G IN 3/4" C
EF-1-1	UTILITY ROOM 003	120 V	1	1	1	3	.25	5.8 A		N-PP-NE	2	2#12AWG AND 1 #12AWG G IN 3/4" C
EF-1-2	UTILITY RM 013	120 V	1	1	1	3	.25	5.8 A		N-PP-SE	14	2#12AWG AND 1 #12AWG G IN 3/4" C
EF-2-1	JAN CLOSET 103	120 V	1	1	1	3	.25	5.8 A		N-PP-NW	6	2#12AWG AND 1 #12AWG G IN 3/4" C
EF-2-2	JAN CLOSET 113	120 V	1	1	1	3	.25	5.8 A		N-PP-SE	9	2#12AWG AND 1 #12AWG G IN 3/4" C
EF-2-3	ELEC CLOSET 106	120 V	1	1	1	3	.25	5.8 A		N-PP-NW	10	2#12AWG AND 1 #12AWG G IN 3/4" C
EF-2-4	ELEC CLOSET 115	120 V	1	1	1	3	.25	5.8 A		N-PP-SE	8	2#12AWG AND 1 #12AWG G IN 3/4" C
EF-10	HUB 118	120 V	1	1	1	3	.25	5.8 A		N-PP-SE	11	2#12AWG AND 1 #12AWG G IN 3/4" C
EF-M-2	ELEC CLOSET 202	120 V	1	1	1	3	.25	5.8 A		N-LP-SW	2	2#12AWG AND 1 #12AWG G IN 3/4" C
EF-MS-1	ELEV MACH RM MS2	120 V	1	1	1	3	.25	5.8 A		EL-S	1	2#12AWG AND 1 #12AWG G IN 3/4" C
EF-MS-2	ELEV MACH RM MS1	120 V	1	1	1	3	.25	5.8 A		EL-N	2	2#12AWG AND 1 #12AWG G IN 3/4" C
EUH-1-1	ELEV MACH RM 001	208 V	3	0	1	4	-	8.3 A	3	N-ELEV-NE	14,16,18	3#12AWG AND 1 #12AWG G IN 3/4" C
EUH-1-2	ELEV MACH RM 011	208 V	3	0	1	4	-	8.3 A	3	N-ELEV-SE	14,16,18	3#12AWG AND 1 #12AWG G IN 3/4" C
EUH-1-3	ESC CONTROL RM 002	208 V	3	0	1	4	-	8.3 A	3	N-ESC1	19,21,23	3#12AWG AND 1 #12AWG G IN 3/4" C
EUH-1-4	ESC CONTROL RM 012	208 V	3	0	1	4	-	8.3 A	3	R-ESC2	19,21,23	3#12AWG AND 1 #12AWG G IN 3/4" C
EUH-1-5	UTILITY RM 003	208 V	3	0	1	4	-	8.3 A	3	HP-2	19,21,23	3#10AWG AND 1 #12AWG G IN 3/4" C
EUH-1-6	UTILITY RM 013	208 V	3	0	1	4	-	8.3 A	3	HP-2	24,26,28	3#10AWG AND 1 #12AWG G IN 3/4" C
EUH-2-1	ELEV MACH RM 101	208 V	3	0	1	4	-	8.3 A	2	N-ELEV-NW	11,13,15	3#12AWG AND 1 #12AWG G IN 3/4" C
EUH-2-2	ELEV MACH RM 111	208 V	3	0	1	4	-	8.3 A	3	N-ELEV-SW	11,13,15	3#12AWG AND 1 #12AWG G IN 3/4" C
EUH-2-3	ELEC CLOSET 106	208 V	3	0	1	4	-	8.3 A	3	HP-2	13,15,17	3#12AWG AND 1 #12AWG G IN 3/4" C
EUH-2-4	ELEC CLOSET 115	208 V	3	0	1	4	-	8.3 A	3	HP-1	6,8,10	3#10AWG AND 1 #12AWG G IN 3/4" C
EUH-2-5	ESC PIT NORTH	208 V	3	0	1	4	-	8.3 A	3	N-ESC1	8,10,12	3#12AWG AND 1 #12AWG G IN 3/4" C
EUH-2-6	ESC PIT SOUTH	208 V	3	0	1	4	-	8.3 A	3	R-ESC2	8,10,12	3#12AWG AND 1 #12AWG G IN 3/4" C
EUH-5-1	ELEV MACH RM MS2	208 V	3	0	1	4	-	11.1 A	4	EL-S	2,4,6	3#12AWG AND 1 #12AWG G IN 3/4" C
EUH-5-2	ELEV MACH RM MS1	208 V	3	0	1	4	-	11.1 A	4	EL-N	1,3,5	3#12AWG AND 1 #12AWG G IN 3/4" C
EUH-M-1	ELEC CLOSET 202	208 V	3	0	1	4	-	8.3 A	3	HP-1	7,9,11	3#12AWG AND 1 #12AWG G IN 3/4" C
EUH-M-2	ELEC RM 203	208 V	3	0	1	4	-	13.9 A	5	HP-2	25,27,29	3#12AWG AND 1 #12AWG G IN 3/4" C

ELECTRICAL EQUIPMENT SCHEDULE

Tag No.	Location	Voltage	Phase Wire	Neutral Wire	Ground Wire	Total Wire	HP	FLA	KW	Panel	Circuit No.	Cable/Conduit
EUH-M-4	ELEC RM 203	208 V	3	0	1	4	-	13.9 A	5	HP-2	30,32,34	3#12AWG AND 1 #12AWG G IN 3/4" C
EVM1-SOUTH	SOUTH PLATFORM UNPAID	120 V	1	1	1	3	-	3.3 A		FCEP	10	-
EVM2-SOUTH	SOUTH PLATFORM UNPAID	120 V	1	1	1	3	-	3.3 A		FCEP	8	-
EVM 1-NORTH	NORTH PLATFORM UNPAID	120 V	1	1	1	3	-	3.3 A		FCEP	7	-
EVM 2-NORTH	NORTH PLATFORM UNPAID	120 V	1	1	1	3	-	3.3 A		FCEP	9	-
EWH	SUBWAY ELEV	0 V	1	1	1	3	-	0.0 A				-
EWH-MS-1	SUBWAY SOUTH ELEV PIT	208 V	3	0	1	4	-	11.1 A	4	EL-S	3,5,7	3#12AWG AND 1 #12AWG G IN 3/4" C
EWH-MS-2	SUBWAY NORTH ELEV PIT	208 V	3	0	1	4	-	11.1 A	4	EL-N	4,6,8	3#12AWG AND 1 #12AWG G IN 3/4" C
IH-1	NORTH PLATFORM WINDBREAK	208 V	3	0	1	4	-	9.0 A	3.2	HP-2	1,3,5	3 #12AWG,3#8AWG AND 1 #10AWG G IN 3/4" C
IH-2	NORTH PLATFORM WINDBREAK	208 V	3	0	1	4	-	9.0 A	3.2	HP-2	1,3,5	SEE ABOVE
IH-3	NORTH PLATFORM WINDBREAK	208 V	3	0	1	4	-	9.0 A	3.2	HP-2	1,3,5	SEE ABOVE
IH-4	SOUTH PLATFORM WINDBREAK	208 V	3	0	1	4	-	9.0 A	3.2	HP-1	1,3,5	3 #12AWG,3#8AWG AND 1 #10AWG G IN 3/4" C
IH-5	SOUTH PLATFORM WINDBREAK	208 V	3	0	1	4	-	9.0 A	3.2	HP-1	1,3,5	SEE ABOVE
IH-6	SOUTH PLATFORM WINDBREAK	208 V	3	0	1	4	-	9.0 A	3.2	HP-1	1,3,5	SEE ABOVE
IH-7	SOUTH PLATFORM WINDBREAK	208 V	3	0	1	4	-	9.0 A	3.2	HP-2	6,8,10	3 #12AWG,3#8AWG AND 1 #10AWG G IN 3/4" C
IH-8	SOUTH PLATFORM WINDBREAK	208 V	3	0	1	4	-	9.0 A	3.2	HP-2	6,8,10	SEE ABOVE
IH-9	SOUTH PLATFORM WINDBREAK	208 V	3	0	1	4	-	9.0 A	3.2	HP-2	6,8,10	SEE ABOVE
IH-10	NORTH PLATFORM CAK	208 V	2	0	1	3	-	14.4 A	3.2	HP-2	2,4	2#8AWG AND 1 #10AWG G IN 3/4" C
IH-11	SOUTH PLATFORM CAK	208 V	2	0	1	3	-	14.4 A	3.2	HP-1	2,4	2#8AWG AND 1 #10AWG G IN 3/4" C
SP-1	NE ELEV PIT	120 V	2	0	1	3	.5	9.8 A		N-ELEV-NE	22	2#12AWG AND 1 #12AWG G IN 3/4" C
SP-2	SE ELEV PIT	120 V	2	0	1	3	.5	9.8 A		N-ELEV-SE	22	2#12AWG AND 1 #12AWG G IN 3/4" C
SP-3	NW ELEV PIT	120 V	2	0	1	3	.5	9.8 A		N-ELEV-NW	14	2#12AWG AND 1 #12AWG G IN 3/4" C
SP-4	SW ELEV PIT	120 V	2	0	1	3	.5	9.8 A		N-ELEV-SW	14	2#12AWG AND 1 #12AWG G IN 3/4" C
SP-5	ESC PIT NORTH	120 V	1	1	1	3	.5	9.8 A		N-ESC1	2	2#10AWG AND 1 #12AWG G IN 3/4" C
SP-6	ESC PIT SOUTH	120 V	1	1	1	3	.5	9.8 A		R-ESC2	2	2#10AWG AND 1 #12AWG G IN 3/4" C
SP-7	UTILITY ROOM 003	120 V	1	1	1	3	.5	9.8 A		R-PP-NE	1	2#10AWG AND 1 #12AWG G IN 3/4" C
SP-8	UTILITY ROOM 013	120 V	1	1	1	3	.5	9.8 A		R-PP-SE	2	2#10AWG AND 1 #12AWG G IN 3/4" C
SP-ES1	SUBWAY NORTH ELEV PIT	120 V	1	1	1	3	.5	9.8 A		EL-N	7	2#12AWG AND 1 #12AWG G IN 3/4" C
SP-ES2	SUBWAY SOUTH ELEV PIT	120 V	1	1	1	3	.5	9.8 A		EL-S	9	2#12AWG AND 1 #12AWG G IN 3/4" C
SVM-NORTH	NORTH PLATFORM UNPAID	120 V	1	1	1	3	-	5.0 A		N-PP-NW	15	-
SVM-SOUTH	SOUTH PLATFORM UNPAID	120 V	1	1	1	3	-	5.0 A		N-PP-SE	17	-
TE-2-1	TOILET ROOF 104	120 V	1	1	1	3	.25	5.8 A		N-PP-NW	8	2#12AWG AND 1 #12AWG G IN 3/4" C
TE-2-2	TOILET ROOF 114	120 V	1	1	1	3	.25	5.8 A		N-PP-SE	7	2#12AWG AND 1 #12AWG G IN 3/4" C
WHE-1	TOILET 104	120 V	1	1	1	3		30.0 A	3.6	HP-2	31	2#8AWG AND 1 #10AWG G IN 3/4" C
WHE-2	TOILET 114	120 V	1	1	1	3		30.0 A	3.6	HP-1	18	2#8AWG AND 1 #10AWG G IN 3/4" C
WHE-3	JAN CLOSET 103	208 V	3	0	1	4		43.4 A	15.6	HP-2	33,35,37	3#6AWG AND 1 #10AWG G IN 1" C
WHE-4	JAN CLOSET 113	208 V	3	0	1	4		43.4 A	15.6	HP-1	19,21,23	3#6AWG AND 1 #10AWG G IN 1" C

NOTES:

1. SEE DRAWING E-001 FOR ELECTRICAL SYMBOL LIST.
2. SEE DRAWING E-002 FOR ELECTRICAL GENERAL NOTES AND ABBREVIATIONS.
3. FURNISH AND INSTALL ALL EQUIPENT WITH EXTERNAL LOCAL DISCONNECT SWITCHES IN STRICT COMPLIANCE WITH CHICAGO ELECTRICAL CODE REQUIREMENT. INCLUDE NAMPLATE ON EACH DISCONNECT SWITCH WHICH STATES ID, VOLTAGE, PHASE, AMPERES AND NEMA TYPE.
4. PROVIDE DISCONNECT SWITCH AT EACH SIGN.

DESIGN BY:										
DRAWN BY:										
CHECKED BY:										
APPROVED BY:		4	7/3/2023	ISSUED FOR BID	JM	EM	OS			
CDOT/APPROVED BY:		NO.	DATE	REVISIONS	DES.	DRW.	CHK.	DCCO	CDOT	

TRANSYSTEMS
222 SOUTH RIVERSIDE PLAZA SUITE 610
CHICAGO, ILLINOIS 60606

SKIDMORE, OWINGS & MERRILL LLP
224 SOUTH MICHIGAN AVENUE, SUITE 1000
CHICAGO, ILLINOIS 60604

FACET ENGINEERING
4316 NORTH ELSTON AVENUE
CHICAGO, ILLINOIS 60641

CHICAGO DEPARTMENT OF TRANSPORTATION
DIVISION OF ENGINEERING

STATE / LAKE LOOP ELEVATED STATION
200 NORTH STATE STREET, CHICAGO, IL 60601

SCHEDULES - EQUIPMENT SCHEDULE

CDOT PROJECT D-1-209 | DATE: 9/9/2022

SPEC. NO.

DRAWING NO. E-612

REVISION NO.1

SIGNAGE SCHEDULE (NOTE 4)

SIGN ID	PANEL	CIRCUIT	CABLE/CONDUIT	NOTES:
DMS	HUB-1	3		
DMS	HUB-1	1		
DMS	HUB-3	3		
DMS	HUB-3	1		
DMS	HUB-1	3		
DMS	HUB-1	1		
DMS	HUB-3	3		
DMS	HUB-3	1		
DMS	HUB-2	3		
DMS	HUB-2	1		
DMS	HUB-4	3		
DMS	HUB-4	1		
DMS	HUB-2	2		
DMS	HUB-2	4		
DMS	HUB-4	2		
DMS	HUB-4	4		
E22	N-LP-SW	17	2-#12AWG + 1-#12 AWG G IN 3/4" C	
E22	N-LP-SW	17	2-#12AWG + 1-#12 AWG G IN 3/4" C	
E22	N-LP-NW	23	2-#12AWG + 1-#12 AWG G IN 3/4" C	
E22	N-LP-NW	23	2-#12AWG + 1-#12 AWG G IN 3/4" C	
E22	N-LP-SW	18	2-#12AWG + 1-#12 AWG G IN 3/4" C	
E22	N-LP-SW	18	2-#12AWG + 1-#12 AWG G IN 3/4" C	
E22	N-LP-SW	18	2-#12AWG + 1-#12 AWG G IN 3/4" C	
E22	N-LP-SW	18	2-#12AWG + 1-#12 AWG G IN 3/4" C	
E22	N-LP-NW	25	2-#12AWG + 1-#12 AWG G IN 3/4" C	
E22	N-LP-NW	25	2-#12AWG + 1-#12 AWG G IN 3/4" C	
E22	N-LP-SE	27	2-#12AWG + 1-#12 AWG G IN 3/4" C	
E22	N-LP-SE	27	2-#12AWG + 1-#12 AWG G IN 3/4" C	
E22	N-LP-NW	1	2-#12AWG + 1-#12 AWG G IN 3/4" C	
E22	N-LP-NW	1	2-#12AWG + 1-#12 AWG G IN 3/4" C	
E22	N-LP-SW	19	2-#12AWG + 1-#12 AWG G IN 3/4" C	
E22	N-LP-SW	19	2-#12AWG + 1-#12 AWG G IN 3/4" C	
E22	N-LP-SE	30	2-#12AWG + 1-#12 AWG G IN 3/4" C	
E22	N-LP-SE	30	2-#12AWG + 1-#12 AWG G IN 3/4" C	
E22	N-LP-NE	20	2-#12AWG + 1-#12 AWG G IN 3/4" C	
E22	N-LP-NE	20	2-#12AWG + 1-#12 AWG G IN 3/4" C	
E-16	N-LP-NW	26	2-#12AWG + 1-#12 AWG G IN 3/4" C	
E-16	N-LP-NW	26	2-#12AWG + 1-#12 AWG G IN 3/4" C	
E-16	N-LP-NW	26	2-#12AWG + 1-#12 AWG G IN 3/4" C	
E-16	N-LP-NW	26	2-#12AWG + 1-#12 AWG G IN 3/4" C	
E-16	N-LP-NW	26	2-#12AWG + 1-#12 AWG G IN 3/4" C	
E-16	N-LP-NW	26	2-#12AWG + 1-#12 AWG G IN 3/4" C	
E-16	N-LP-SW	18	2-#12AWG + 1-#12 AWG G IN 3/4" C	
E-16	N-LP-SW	18	2-#12AWG + 1-#12 AWG G IN 3/4" C	
E-27a	N-LP-SE	24	2-#12AWG + 1-#12 AWG G IN 3/4" C	
E-27a	N-LP-SE	25	2-#12AWG + 1-#12 AWG G IN 3/4" C	
E-27a	N-LP-SW	17	2-#12AWG + 1-#12 AWG G IN 3/4" C	
E-27a2	N-LP-SW	17	2-#12AWG + 1-#12 AWG G IN 3/4" C	
E-27b	N-LP-NW	23	2-#12AWG + 1-#12 AWG G IN 3/4" C	
E-27b	N-LP-NE	16	2-#12AWG + 1-#12 AWG G IN 3/4" C	
E-27b	N-LP-NE	18	2-#12AWG + 1-#12 AWG G IN 3/4" C	
E-27b2	N-LP-NW	23	2-#12AWG + 1-#12 AWG G IN 3/4" C	
E-33	N-LP-SE	26	2-#12AWG + 1-#12 AWG G IN 3/4" C	
E-33	N-LP-NW	24	2-#12AWG + 1-#12 AWG G IN 3/4" C	
E-34A	N-LP-SE	26	2-#12AWG + 1-#12 AWG G IN 3/4" C	
E-34A	N-LP-NW	24	2-#12AWG + 1-#12 AWG G IN 3/4" C	
E-34B	N-LP-SE	26	2-#12AWG + 1-#12 AWG G IN 3/4" C	
E-34B	N-LP-NW	24	2-#12AWG + 1-#12 AWG G IN 3/4" C	
E-K1				

NOTES:

1. SEE DRAWING E-001 FOR ELECTRICAL SYMBOL LIST.
2. SEE DRAWING E-002 FOR ELECTRICAL GENERAL NOTES AND ABBREVIATIONS.
3. FURNISH AND INSTALL EQUIPMENT DISCONNECT SWITCHES IN STRICT COMPLIANCE WITH CHICAGO ELECTRICAL CODE REQUIREMENTS. INCLUDE NAMEPLATE ON EACH DISCONNECT SWITCH WHICH STATES ID, VOLTAGE, PHASE, AMPERES AND NEMA TYPE.
4. PROVIDE DISCONNECT SWITCH AT EACH SIGN.

DESIGN BY:									
DRAWN BY:									
CHECKED BY:									
APPROVED BY:		4	7/3/2023	ISSUED FOR BID	EM	EM	JM		
CDOT/APPROVED BY:		NO.	DATE	REVISIONS	DES.	DRW.	CHK.	DCCO	CDOT

TRANSYSTEMS
222 SOUTH RIVERSIDE PLAZA SUITE 610
CHICAGO, ILLINOIS 60606

SKIDMORE, OWINGS & MERRILL LLP
224 SOUTH MICHIGAN AVENUE, SUITE 1000
CHICAGO, ILLINOIS 60604

FACET ENGINEERING
4316 NORTH ELSTON AVENUE
CHICAGO, ILLINOIS 60641

CHICAGO DEPARTMENT OF TRANSPORTATION
DIVISION OF ENGINEERING

STATE / LAKE LOOP ELEVATED STATION
200 NORTH STATE STREET, CHICAGO, IL 60601

SCHEDULES - SIGNAGE SCHEDULE

CDOT PROJECT D-1-209

DATE: 9/9/2022

SPEC. NO.

DRAWING NO. E-613

REVISION NO.1

Branch Panel: R-LP-NE

Location:
Supply From:
Mounting: Surface
Enclosure: Type 1

Volts: 120/208 Wye
Phases: 3
Wires: 4

A.I.C. Rating: 65K
Mains Type: MCB
Mains Rating: 150 A
MCB Rating: 150 A

CKT	Circuit Description	Trip	Poles	A		B		C		Poles	Trip	Circuit Description	CKT
1	Other	20 A	1	1400...	28 VA					1	20 A	CENTER NE STAIR LTG	2
3	PLATFORM LTG TRAY LTG	20 A	1			560 VA	1400...			1	20 A	Other	4
5	NE STAIR PLAT TO STREET LTG	20 A	1					35 VA	32 VA	1	20 A	N. ESCALATOR LTG	6
7	MAIN ELECT ROOM LTG	20 A	1	135 VA									8
9													10
11									1440...	1	15 A	RCP POWER	12
13													14
15													16
17													18
19													20
21													22
23													24
25													26
27													28
29													30
31													32
33													34
35													36
37					0 VA					3	90 A	SPD	38
39							0 VA			--	--	--	40
41									0 VA	--	--	--	42
		Total Load:		1563 VA		1960 VA		1507 VA					
		Total Amps:		13 A		16 A		13 A					

Load Classification	Connected Load	Demand Factor	Estimated Demand	Panel Totals	
Lighting	790 VA	100.00%	790 VA		
Other	2800 VA	100.00%	2800 VA	**Total Conn. Load:**	5030 VA
Spare	1440 VA	100.00%	1440 VA	**Total Est. Demand:**	5030 VA
				Total Conn. Current:	14 A
				Total Est. Demand Current:	14 A

Notes:

Branch Panel: N-LP-NE

Location:
Supply From:
Mounting: Surface
Enclosure: Type 1

Volts: 120/208 Wye
Phases: 3
Wires: 4

A.I.C. Rating: 65K
Mains Type: MCB
Mains Rating: 150 A
MCB Rating: 150 A

CKT	Circuit Description	Trip	Poles	A		B		C		Poles	Trip	Circuit Description	CKT
1	PLATFORM LTG TRAY LTG	20 A	1	504 VA	25 VA					1	20 A	CENTER NE STAIR LTG	2
3	PLATFORM LTG TRAY LTG	20 A	1			448 VA	28 VA			1	20 A	CENTER NE STAIR LTG	4
5	PLATFORM LTG TRAY LTG	20 A	1					448 VA	25 VA	1	20 A	CENTER NE STAIR LTG	6
7	NE STAIR PLAT TO STREET LTG	20 A	1	35 VA	32 VA					1	20 A	N. ESCALATOR LTG	8
9	NE STAIR PLAT TO STREET LTG	20 A	1			35 VA	32 VA			1	20 A	N. ESCALATOR LTG	10
11	NE STAIR PLAT TO STREET LTG	20 A	1					32 VA	28 VA	1	20 A	N. ESCALATOR LTG	12
13	MAIN ELECT ROOM LTG	20 A	1	135 VA	45 VA					1	20 A	STREET LEVEL N. UTILITY RM LTG	14
15	MAIN ELECT ROOM LTG	20 A	1			135 VA	100 VA			1	20 A	NE STAIR SIGNAGE	16
17	MAIN ELECT ROOM LTG	20 A	1					135 VA	100 VA	1	20 A	N. ESC SIGNAGE	18
19	NE END OF PLAT LTG	20 A	1	42 VA	200 VA					1	20 A	E-22	20
21	NE ART LIGHTING	20 A	1			300 VA							22
23													24
25													26
27													28
29	ARCH FARE ARRAY TRUSS LTG	20 A	1					144 VA					30
31	ARCH CANOPY LTG	20 A	1	240 VA									32
33	ARCH CANOPY LTG	20 A	1			304 VA							34
35	ARCH FARE ARRAY SCROLL LTG	20 A	1					144 VA					36
37	ARCH CANOPY LTG	20 A	1	176 VA									38
39	ARCH CANOPY LTG	20 A	1			352 VA							40
41	ARCH CANOPY LTG	20 A	1					304 VA					42
		Total Load:		1433 VA		1734 VA		1359 VA					
		Total Amps:		12 A		15 A		11 A					

Load Classification	Connected Load	Demand Factor	Estimated Demand	Panel Totals	
Lighting	3784 VA	100.00%	3784 VA		
Other	442 VA	100.00%	442 VA	**Total Conn. Load:**	4526 VA
Power	300 VA	100.00%	300 VA	**Total Est. Demand:**	4526 VA
				Total Conn. Current:	13 A
				Total Est. Demand Current:	13 A

Notes:

Branch Panel: EM-1

Location: ELEC CL 202
Supply From:
Mounting: Surface
Enclosure: Type 1

Volts: 120/208 Wye
Phases: 3
Wires: 4

A.I.C. Rating: 65K
Mains Type: MCB
Mains Rating: 100 A
MCB Rating: 100 A

CKT	Circuit Description	Trip	Poles	A		B		C		Poles	Trip	Circuit Description	CKT
1	ELEV-SE CAB LTG	20 A	1	500 VA	610 VA					1	20 A	PLATFORM LTG TRAY LTG	2
3	HISTORIC CANOPY DN LTG	20 A	1			108 VA	99 VA			1	20 A	HIGH CANOPY UNPAID LTG	4
5	CENTER SW STAIR LTG	20 A	1					34 VA	34 VA	1	20 A	CENTER SE STAIR LTG	6
7	S. ESCALATOR LTG	20 A	1	18 VA	34 VA					1	20 A	NW STAIR PLAT TO STREET LTG	8
9	FLYOVER LTG	20 A	1			27 VA	38 VA			1	20 A	SW STAIR LTG	10
11	ELEC CL AND COMM RM LTG	20 A	1					135 VA	45 VA	1	20 A	STREET LEVEL S. UTILITY RM LTG	12
13	S. CAK LTG	20 A	1	34 VA									14
15													16
17													18
19													20
21													22
23													24
25													26
27													28
29													30
31													32
33													34
35													36
37													38
39													40
41													42
		Total Load:		1196 VA		272 VA		248 VA					
		Total Amps:		10 A		2 A		2 A					

Load Classification	Connected Load	Demand Factor	Estimated Demand	Panel Totals	
Lighting	1716 VA	100.00%	1716 VA		
				Total Conn. Load:	1716 VA
				Total Est. Demand:	1716 VA
				Total Conn. Current:	5 A
				Total Est. Demand Current:	5 A

Notes:

Branch Panel: N-PP-NE

Location:
Supply From:
Mounting: Surface
Enclosure: Type 1

Volts: 120/208 Wye
Phases: 3
Wires: 4

A.I.C. Rating: 65K
Mains Type: MCB
Mains Rating: 100 A
MCB Rating: 100 A

CKT	Circuit Description	Trip	Poles	A		B		C		Poles	Trip	Circuit Description	CKT
1	UTILITY ROOM RECEPT	20 A	1	360 VA	696 VA					1	20 A	EF-1-1	2
3	CU-M-3, AC-M-3	35 A	2			2600...	2600...			2	35 A	AC-M-4, CU-M-4	4
5	--	--	--					2600...	2600...	--	--	--	6
7													8
9													10
11													12
13													14
15													16
17													18
19													20
21													22
23													24
25													26
27													28
29													30
31													32
33													34
35													36
37													38
39													40
41													42
		Total Load:		1056 VA		5200 VA		5200 VA					
		Total Amps:		9 A		49 A		49 A					

Load Classification	Connected Load	Demand Factor	Estimated Demand	Panel Totals	
Exhaust Fan	696 VA	100.00%	696 VA		
HVAC	10400 VA	100.00%	10400 VA	**Total Conn. Load:**	11456 VA
Receptacle	360 VA	100.00%	360 VA	**Total Est. Demand:**	11456 VA
				Total Conn. Current:	32 A
				Total Est. Demand Current:	32 A

Notes:

NOTES:

1. PROVIDE POWER FEEDS FROM EACH PANEL CIRCUIT TO INDICATED LOAD. PROVIDE WIRE/CABLE SIZED PER CODE INCLUDING VOLTAGE DROP AND CONDUIT SIZE PER CODE.
2. ALL RACEWAYS TO BE INSTALLED CONCEALED FROM PUBLIC VISIBILITY.
3. PROVIDE LOCKABLE CIRCUIT BREAKERS.

DESIGN BY:										
DRAWN BY:										
CHECKED BY:										
APPROVED BY:		4	7/3/2023	ISSUED FOR BID	JM	SRM	SM			
CDOT/APPROVED BY:		NO.	DATE	REVISIONS	DES.	DRW.	CHK.	DCCO	CDOT	

TRANSYSTEMS
222 SOUTH RIVERSIDE PLAZA SUITE 610
CHICAGO, ILLINOIS 60606

SKIDMORE, OWINGS & MERRILL LLP
224 SOUTH MICHIGAN AVENUE, SUITE 1000
CHICAGO, ILLINOIS 60604

FACET ENGINEERING
4316 NORTH ELSTON AVENUE
CHICAGO, ILLINOIS 60641

CHICAGO DEPARTMENT OF TRANSPORTATION
DIVISION OF ENGINEERING

STATE / LAKE LOOP ELEVATED STATION
200 NORTH STATE STREET, CHICAGO, IL 60601

SCHEDULES - PANELS

CDOT PROJECT D-1-209

DATE: 9/9/2022

SPEC. NO.

DRAWING NO. E-614

REVISION NO.1

Branch Panel: HP-2

Location:
Supply From:
Mounting: Surface
Enclosure: Type 1

Volts: 120/208 Wye
Phases: 3
Wires: 4

A.I.C. Rating: 65K
Mains Type: MCB
Mains Rating: 400 A
MCB Rating: 400 A

CKT	Circuit Description	Trip	Poles	A		B		C		Poles	Trip	Circuit Description	CKT
1	Infrared Heater IH-1,2,3	40 A	3	3242...	1500...					2	30 A	Infrared Heater North CAK	2
3	--	--	--			3242...	1500...			--	--	--	4
5	--	--	--					3242...	3242...	3	40 A	IH-7,8,9	6
7	ECH-2-1	20 A	3	1050...	3242...					--	--	--	8
9	--	--	--			1050...	3242...			--	--	--	10
11	--	--	--					1050...	1334...	3	20 A	ECH-2-3	12
13	EUH-2-3	20 A	3	1002...	1334...					--	--	--	14
15	--	--	--			1002...	1334...			--	--	--	16
17	--	--	--					1002...	1002...	3	20 A	ECH-2-5	18
19	EUH-1-5	20 A	3	1002...	1002...					--	--	--	20
21	--	--	--			1002...	1002...			--	--	--	22
23	--	--	--					1002...	1002...	3	20 A	EUH-1-6	24
25	EUH-M-2	20 A	3	1668...	1002...					--	--	--	26
27	--	--	--			1668...	1002...			--	--	--	28
29	--	--	--					1668...	1668...	3	20 A	EUH-M-4	30
31	WHE-1	40 A	1	3600...	1668...					--	--	--	32
33	WHE-3	60 A	3			5206...	1668...			--	--	--	34
35	--	--	--					5206...					36
37	--	--	--	5206...									38
39													40
41													42
			Total Load:	26516 VA		22916 VA		21417 VA					
			Total Amps:	223 A		193 A		178 A					

Load Classification	Connected Load	Demand Factor	Estimated Demand	Panel Totals	
HEAT	29178 VA	100.00%	29178 VA		
Infrared Heater	22454 VA	100.00%	22454 VA	**Total Conn. Load:**	70849 VA
Water Heater	19218 VA	100.00%	19218 VA	**Total Est. Demand:**	70849 VA
				Total Conn. Current:	197 A
				Total Est. Demand Current:	197 A

Notes:
SEE NOTE 3

Branch Panel: R-PP-NE

Location:
Supply From:
Mounting: Surface
Enclosure: Type 1

Volts: 120/208 Wye
Phases: 3
Wires: 4

A.I.C. Rating: 65K
Mains Type: MCB
Mains Rating: 100 A
MCB Rating: 100 A

CKT	Circuit Description	Trip	Poles	A		B		C		Poles	Trip	Circuit Description	CKT
1	SP-7	20 A	1	1176...	901 VA					3	20 A	DBP-1	2
3	Other	20 A	1			500 VA	901 VA			--	--	--	4
5								901 VA		--	--	--	6
7													8
9													10
11													12
13													14
15													16
17													18
19													20
21													22
23													24
25													26
27													28
29													30
31													32
33													34
35													36
37													38
39													40
41													42
			Total Load:	2077 VA		1401 VA		901 VA					
			Total Amps:	18 A		12 A		8 A					

Load Classification	Connected Load	Demand Factor	Estimated Demand	Panel Totals	
BOOSTER PUMP	2702 VA	100.00%	2702 VA		
Other	500 VA	100.00%	500 VA	**Total Conn. Load:**	4378 VA
Sump Pump	1176 VA	100.00%	1176 VA	**Total Est. Demand:**	4378 VA
				Total Conn. Current:	12 A
				Total Est. Demand Current:	12 A

Notes:

Branch Panel: HTC-2

Location: ELEC RM 203
Supply From:
Mounting: Surface
Enclosure: Type 1

Volts: 120/208 Wye
Phases: 3
Wires: 4

A.I.C. Rating: 65K
Mains Type: MCB
Mains Rating: 400 A
MCB Rating: 400 A

CKT	Circuit Description	Trip	Poles	A		B		C		Poles	Trip	Circuit Description	CKT
1													2
3													4
5													6
7													8
9													10
11													12
13													14
15													16
17													18
19													20
21													22
23													24
25													26
27													28
29													30
31													32
33													34
35													36
37													38
39													40
41													42
			Total Load:	0 VA		0 VA		0 VA					
			Total Amps:	0 A		0 A		0 A					

Load Classification	Connected Load	Demand Factor	Estimated Demand	Panel Totals	
				Total Conn. Load:	0 VA
				Total Est. Demand:	0 VA
				Total Conn. Current:	0 A
				Total Est. Demand Current:	0 A

Notes:
SEE NOTE 3

Branch Panel: FCEP

Location:
Supply From:
Mounting: Surface
Enclosure: Type 1

Volts: 120/208 Wye
Phases: 3
Wires: 4

A.I.C. Rating: 65K
Mains Type: MCB
Mains Rating: 100 A
MCB Rating: 100 A

CKT	Circuit Description	Trip	Poles	A		B		C		Poles	Trip	Circuit Description	CKT
1	CAK - NORTH	20 A	1	500 VA	500 VA					1	20 A	CAK -SOUTH	2
3													4
5													6
7	EVM-NORTH	20 A	1	400 VA	400 VA					1	20 A	EVM-SOUTH	8
9	EVM-NORTH	20 A	1			400 VA	400 VA			1	20 A	EVM-SOUTH	10
11													12
13													14
15													16
17													18
19													20
21													22
23													24
25													26
27													28
29													30
31													32
33													34
35													36
			Total Load:	1799 VA		799 VA		0 VA					
			Total Amps:	16 A		8 A		0 A					

Load Classification	Connected Load	Demand Factor	Estimated Demand	Panel Totals	
EVM	1598 VA	100.00%	1598 VA		
Power - General	1000 VA	100.00%	1000 VA	**Total Conn. Load:**	2598 VA
				Total Est. Demand:	2598 VA
				Total Conn. Current:	7 A
				Total Est. Demand Current:	7 A

Notes:

NOTES:

1. PROVIDE POWER FEEDS FROM EACH PANEL CIRCUIT TO INDICATED LOAD. PROVIDE WIRE/CABLE SIZED PER CODE INCLUDING VOLTAGE DROP AND CONDUIT SIZE PER CODE.
2. ALL RACEWAYS TO BE INSTALLED CONCEALED FROM PUBLIC VISIBILITY.
3. PROVIDE LOCKABLE CIRCUIT BREAKERS.
4. CIRCUIT BREAKERS FEEDING MECHANICAL, PLUMBING, AND MOTORS SHALL BE HACR TYPE.

DESIGN BY:										
DRAWN BY:										
CHECKED BY:										
APPROVED BY:		4	7/3/2023	ISSUED FOR BID	EM	SRM	SM			
CDOT/APPROVED BY:		NO.	DATE	REVISIONS	DES.	DRW.	CHK.	DCCO	CDOT	

TRANSYSTEMS
222 SOUTH RIVERSIDE PLAZA SUITE 610
CHICAGO, ILLINOIS 60606

SKIDMORE, OWINGS & MERRILL LLP
224 SOUTH MICHIGAN AVENUE, SUITE 1000
CHICAGO, ILLINOIS 60604

FACET ENGINEERING
4316 NORTH ELSTON AVENUE
CHICAGO, ILLINOIS 60641

CHICAGO DEPARTMENT OF TRANSPORTATION
DIVISION OF ENGINEERING

STATE / LAKE LOOP ELEVATED STATION
200 NORTH STATE STREET, CHICAGO, IL 60601

SCHEDULES - PANELS

CDOT PROJECT D-1-209

DATE: 9/9/2022

SPEC. NO.

DRAWING NO. E-615

REVISION NO. 1

Branch Panel: HP-1

Location:
Supply From:
Mounting: Surface
Enclosure: Type 1

Volts: 120/208 Wye
Phases: 3
Wires: 4

A.I.C. Rating: 65K
Mains Type: MCB
Mains Rating: 400 A
MCB Rating: 400 A

CKT	Circuit Description	Trip	Poles	A		B		C		Poles	Trip	Circuit Description	CKT
1	Infrared Heater IH-4,5,6	40 A	3	3242...	1500...					2	20 A	Infrared Heater South CAK	2
3	--	--	--			3242...	1500...			--	--	--	4
5	--	--	--					3242...	1002...	3	20 A	EUH-2-4	6
7	EHU-M-1	20 A	3	1002...	1002...					--	--	--	8
9	--	--	--			1002...	1002...			--	--	--	10
11	--	--	--					1002...	1050...	3	20 A	ECH-2-2	12
13	ECH-2-4	20 A	3	1334...	1050...					--	--	--	14
15	--	--	--			1334...	1050...			--	--	--	16
17	--	--	--					1334...	3600...	1	40 A	WHE-2	18
19	WHE-4	60 A	3	5206...	1002...					3	20 A	ECH-2-6	20
21	--	--	--			5206...	1002...			--	--	--	22
23	--	--	--					5206...	1002...	--	--	--	24
25													26
27													28
29													30
31													32
33													34
35													36
37													38
39													40
41													42
		Total Load:		15336 VA		15336 VA		17437 VA					
		Total Amps:		128 A		128 A		145 A					

Load Classification	Connected Load	Demand Factor	Estimated Demand	Panel Totals	
HEAT	16165 VA	100.00%	16165 VA		
Infrared Heater	12727 VA	100.00%	12727 VA	**Total Conn. Load:**	48109 VA
Water Heater	19218 VA	100.00%	19218 VA	**Total Est. Demand:**	48109 VA
				Total Conn. Current:	134 A
				Total Est. Demand Current:	134 A

Notes:
SEE NOTE 4

Branch Panel: HTC-1

Location: ELEC CL 202
Supply From:
Mounting: Surface
Enclosure: Type 1

Volts: 120/208 Wye
Phases: 3
Wires: 4

A.I.C. Rating: 65K
Mains Type: MCB
Mains Rating: 400 A
MCB Rating: 400 A

CKT	Circuit Description	Trip	Poles	A		B		C		Poles	Trip	Circuit Description	CKT
1													2
3													4
5													6
7													8
9													10
11													12
13													14
15													16
17													18
19													20
21													22
23													24
25													26
27													28
29													30
31													32
33													34
35													36
37													38
39													40
41													42
		Total Load:		0 VA		0 VA		0 VA					
		Total Amps:		0 A		0 A		0 A					

Load Classification	Connected Load	Demand Factor	Estimated Demand	Panel Totals	
				Total Conn. Load:	0 VA
				Total Est. Demand:	0 VA
				Total Conn. Current:	0 A
				Total Est. Demand Current:	0 A

Notes:
SEE NOTE 4

Branch Panel: EM-2

Location:
Supply From:
Mounting: Surface
Enclosure: Type 1

Volts: 120/208 Wye
Phases: 3
Wires: 4

A.I.C. Rating: 65K
Mains Type: MCB
Mains Rating: 100 A
MCB Rating: 100 A

CKT	Circuit Description	Trip	Poles	A		B		C		Poles	Trip	Circuit Description	CKT
1	ELEV NE CAB LTG	20 A	1	500 VA	610 VA					1	20 A	PLATFORM LTG TRAY LTG	2
3	HISTORIC CANOPY DN LTG	20 A	1			108 VA	99 VA			1	20 A	HIGH CANOPY UNPAID LTG	4
5	CENTER NE STAIR LTG	20 A	1					34 VA	34 VA	1	20 A	NE STAIR PLAT TO STREET LTG	6
7	CENTER NW STAIR LTG	20 A	1	34 VA	34 VA					1	20 A	SE STAIR PLAT TO STREET LTG	8
9	N. ESCALATOR LTG	20 A	1			18 VA	52 VA			1	20 A	FLYOVER LTG	10
11	MAIN ELECT ROOM LTG	20 A	1					90 VA	45 VA	1	20 A	STREET LEVEL N. UTILITY RM LTG	12
13	NW PLATFORM ROOM LIGHTING PLAN	20 A	1	34 VA									14
15													16
17													18
19													20
21													22
23													24
25													26
27													28
29													30
31													32
33													34
35	FACP PANEL PWR	20 A	2					500 VA	500 VA	1	20 A	NW ELEV FACP CONTROL	36
37	--	--	--	500 VA	500 VA					1	20 A	NE ELEV FACP CONTROL	38
39	N. ESCALATOR FACP CONTROL	20 A	1			500 VA	500 VA			1	20 A	SW ELEV FACP CONTROL	40
41	S. ESCALATOR FACP CONTROL	20 A	1					500 VA	500 VA	1	20 A	SE ELEV FACP CONTROL	42
		Total Load:		2212 VA		1277 VA		2203 VA					
		Total Amps:		20 A		11 A		20 A					

Load Classification	Connected Load	Demand Factor	Estimated Demand	Panel Totals	
Lighting	1693 VA	100.00%	1693 VA		
Spare	4000 VA	100.00%	4000 VA	**Total Conn. Load:**	5693 VA
				Total Est. Demand:	5693 VA
				Total Conn. Current:	16 A
				Total Est. Demand Current:	16 A

Notes:
SEE NOTE 3

Branch Panel: R-LP-SW

Location: ELEC CL 202
Supply From:
Mounting: Surface
Enclosure: Type 1

Volts: 120/208 Wye
Phases: 3
Wires: 4

A.I.C. Rating: 65K
Mains Type: MCB
Mains Rating: 150 A
MCB Rating: 150 A

CKT	Circuit Description	Trip	Poles	A		B		C		Poles	Trip	Circuit Description	CKT
1	PLATFORM LTG TRAY LTG	20 A	1	616 VA	180 VA					1	20 A	Receptacle	2
3	CENTER SW STAIR LTG	20 A	1			28 VA	42 VA			1	20 A	SW STAIR LTG	4
5	FLYOVER LTG	20 A	1					18 VA					6
7													8
9													10
11													12
13													14
15													16
17													18
19													20
21													22
23													24
25													26
27													28
29													30
31													32
33													34
35													36
37					0 VA					3	90 A	SPD	38
39							0 VA			--	--	--	40
41									0 VA	--	--	--	42
		Total Load:		796 VA		70 VA		18 VA					
		Total Amps:		7 A		1 A		0 A					

Load Classification	Connected Load	Demand Factor	Estimated Demand	Panel Totals	
Lighting	704 VA	100.00%	704 VA		
Receptacle	180 VA	100.00%	180 VA	**Total Conn. Load:**	884 VA
				Total Est. Demand:	884 VA
				Total Conn. Current:	2 A
				Total Est. Demand Current:	2 A

Notes:

NOTES:

1. PROVIDE POWER FEEDS FROM EACH PANEL CIRCUIT TO INDICATED LOAD. PROVIDE WIRE/CABLE SIZED PER CODE INCLUDING VOLTAGE DROP AND CONDUIT SIZE PER CODE.
2. ALL RACEWAYS TO BE INSTALLED CONCEALED FROM PUBLIC VISIBILITY.
3. PROVIDE LOCKABLE CIRCUIT BREAKERS.
4. CIRCUIT BREAKERS FEEDING MECHANICAL, PLUMBING, AND MOTORS SHALL BE HACR TYPE.

DESIGN BY:										
DRAWN BY:										
CHECKED BY:										
APPROVED BY:		4	7/3/2023	ISSUED FOR BID	EM	SRM	SM			
CDOT/APPROVED BY:		NO.	DATE	REVISIONS	DES.	DRW.	CHK.	DCCO	CDOT	

TRANSYSTEMS
222 SOUTH RIVERSIDE PLAZA SUITE 610
CHICAGO, ILLINOIS 60606

SKIDMORE, OWINGS & MERRILL LLP
224 SOUTH MICHIGAN AVENUE, SUITE 1000
CHICAGO, ILLINOIS 60604

FACET ENGINEERING
4316 NORTH ELSTON AVENUE
CHICAGO, ILLINOIS 60641

CHICAGO DEPARTMENT OF TRANSPORTATION
DIVISION OF ENGINEERING

STATE / LAKE LOOP ELEVATED STATION
200 NORTH STATE STREET, CHICAGO, IL 60601

SCHEDULES - PANELS

CDOT PROJECT D-1-209

DATE: 9/9/2022

SPEC. NO.

DRAWING NO. E-616

REVISION NO.1

Branch Panel: N-LP-SW

Location: ELEC CL 202
Supply From:
Mounting: Surface
Enclosure: Type 1

Volts: 120/208 Wye
Phases: 3
Wires: 4

A.I.C. Rating: 65K
Mains Type: MCB
Mains Rating: 150 A
MCB Rating: 150 A

CKT	Circuit Description	Trip	Poles	A		B		C		Poles	Trip	Circuit Description	CKT
1	ELEC 202 RECEPT	20 A	1	360 VA	696 VA					1	20 A	EF-M-2 ELECT CLOSET	2
3	PLATFORM LTG TRAY LTG	20 A	1			616 VA	28 VA			1	20 A	CENTER SW STAIR LTG	4
5	PLATFORM LTG TRAY LTG	20 A	1					560 VA	28 VA	1	20 A	CENTER SW STAIR LTG	6
7	PLATFORM LTG TRAY LTG	20 A	1	560 VA	25 VA					1	20 A	CENTER SW STAIR LTG	8
9	SW STAIR LTG	20 A	1			42 VA	14 VA			1	20 A	FLYOVER LTG	10
11	Lighting	20 A	1					39 VA	14 VA	1	20 A	FLYOVER LTG	12
13	SW STAIR LTG	20 A	1	39 VA	14 VA					1	20 A	FLYOVER LTG	14
15	SW ELEC CL LTG	20 A	1			45 VA	300 VA			1	20 A	SOUTH FLYOVER STAIR HANDRAIL LTG	16
17	SW STAIR/ELEV SIGNAGE	20 A	1					400 VA	600 VA	1	20 A	LTG TRAY PLATFORM SIGNAGE	18
19	E-22	20 A	1	200 VA	200 VA					1	20 A	CLOCK CONTROLLER	20
21	SW ART LTG	20 A	1			300 VA	500 VA			1	20 A	CLOCK CONTROLLER - HTR FOR CLOCK	22
23									120 VA	1	20 A	CLOCK FACE LED LTG	24
25					120 VA					1	20 A	CLOCK FACE LED LTG	26
27													28
29	ARCH FARE ARRAY TRUSS LTG	20 A	1					144 VA					30
31	ARCH CANOPY LTG	20 A	1	304 VA									32
33	ARCH CANOPY LTG	20 A	1			240 VA							34
35	ARCH FARE ARRAY SCROLL LTG	20 A	1					144 VA					36
37	ARCH CANOPY LTG	20 A	1	352 VA	0 VA					3	90 A	SPD	38
39	ARCH CANOPY LTG	20 A	1			176 VA	0 VA			--	--	--	40
41	ARCH CANOPY LTG	20 A	1					416 VA	0 VA	--	--	--	42
			Total Load:	2869 VA		2261 VA		2465 VA					
			Total Amps:	24 A		19 A		21 A					

Load Classification	Connected Load	Demand Factor	Estimated Demand	Panel Totals	
Exhaust Fan	696 VA	100.00%	696 VA		
Lighting	4099 VA	100.00%	4099 VA	**Total Conn. Load:**	7595 VA
Other	1200 VA	100.00%	1200 VA	**Total Est. Demand:**	7595 VA
Power	300 VA	100.00%	300 VA	**Total Conn. Current:**	21 A
Receptacle	360 VA	100.00%	360 VA	**Total Est. Demand Current:**	21 A
Spare	940 VA	100.00%	940 VA		

Notes:

Branch Panel: SM-1

Location: ELEC CL 115
Supply From:
Mounting: Surface
Enclosure: Type 1

Volts: 120/208 Wye
Phases: 3
Wires: 4

A.I.C. Rating: 65K
Mains Type: MCB
Mains Rating: 400 A
MCB Rating: 400 A

CKT	Circuit Description	Trip	Poles	A		B		C		Poles	Trip	Circuit Description	CKT
1	Heat Trace	20 A	1	1200...	1200...					1	20 A	Heat Trace	2
3	Heat Trace	20 A	1			1200...	1200...			1	20 A	Heat Trace	4
5	Heat Trace	20 A	1					1200...	1200...	1	20 A	Heat Trace	6
7	Heat Trace	20 A	1	1200...	1200...					1	20 A	Heat Trace	8
9	Heat Trace	20 A	1			1200...	1200...			1	20 A	Heat Trace	10
11	Heat Trace	20 A	1					1200...	1200...	1	20 A	Heat Trace	12
13	Heat Trace	20 A	1	1200...	1200...					1	20 A	Heat Trace	14
15	Heat Trace	20 A	1			1200...	1200...			1	20 A	Heat Trace	16
17	Heat Trace	20 A	1					1200...	1200...	1	20 A	Heat Trace	18
19	Heat Trace	20 A	1	1200...									20
21													22
23													24
25													26
27													28
29													30
31													32
33													34
35													36
37													38
39													40
41													42
			Total Load:	8400 VA		7200 VA		7200 VA					
			Total Amps:	70 A		60 A		60 A					

Load Classification	Connected Load	Demand Factor	Estimated Demand	Panel Totals	
Heat Trace	22800 VA	100.00%	22800 VA		
				Total Conn. Load:	22800 VA
				Total Est. Demand:	22800 VA
				Total Conn. Current:	63 A
				Total Est. Demand Current:	63 A

Notes:

Branch Panel: SM-2

Location: ELEC RM 203
Supply From:
Mounting: Surface
Enclosure: Type 1

Volts: 120/208 Wye
Phases: 3
Wires: 4

A.I.C. Rating: 65K
Mains Type: MCB
Mains Rating: 400 A
MCB Rating: 400 A

CKT	Circuit Description	Trip	Poles	A		B		C		Poles	Trip	Circuit Description	CKT
1	Heat Trace	20 A	1	1200...	1200...					1	20 A	Heat Trace	2
3	Heat Trace	20 A	1			1200...	1200...			1	20 A	Heat Trace	4
5	Heat Trace	20 A	1					1200...	1200...	1	20 A	Heat Trace	6
7	Heat Trace	20 A	1	1200...	1200...					1	20 A	Heat Trace	8
9	Heat Trace	20 A	1			1200...	1200...			1	20 A	Heat Trace	10
11	Heat Trace	20 A	1					1200...	1500...	1	20 A	Heat Trace	12
13	Heat Trace	20 A	1	1500...	1200...					1	20 A	Heat Trace	14
15	Heat Trace	20 A	1			1200...	1500...			1	20 A	Heat Trace	16
17	Heat Trace	20 A	1					1200...	1500...	1	20 A	Heat Trace	18
19	Heat Trace	20 A	1	1200...	1500...					1	20 A	Heat Trace	20
21	Heat Trace	20 A	1			1500...							22
23													24
25													26
27													28
29													30
31													32
33													34
35													36
37													38
39													40
41													42
			Total Load:	10200 VA		9000 VA		7800 VA					
			Total Amps:	87 A		77 A		65 A					

Load Classification	Connected Load	Demand Factor	Estimated Demand	Panel Totals	
Heat Trace	27000 VA	100.00%	27000 VA		
				Total Conn. Load:	27000 VA
				Total Est. Demand:	27000 VA
				Total Conn. Current:	75 A
				Total Est. Demand Current:	75 A

Notes:

NOTES:

1. PROVIDE POWER FEEDS FROM EACH PANEL CIRCUIT TO INDICATED LOAD. PROVIDE WIRE/CABLE SIZED PER CODE INCLUDING VOLTAGE DROP AND CONDUIT SIZE PER CODE.
2. ALL RACEWAYS TO BE INSTALLED CONCEALED FROM PUBLIC VISIBILITY.

DESIGN BY:										
DRAWN BY:										
CHECKED BY:										
APPROVED BY:		4	7/3/2023	ISSUED FOR BID	EM	SRM	SM			
CDOT/APPROVED BY:		NO.	DATE	REVISIONS	DES.	DRW.	CHK.	DCCO	CDOT	

TRANSYSTEMS
222 SOUTH RIVERSIDE PLAZA SUITE 610
CHICAGO, ILLINOIS 60606

SKIDMORE, OWINGS & MERRILL LLP
224 SOUTH MICHIGAN AVENUE, SUITE 1000
CHICAGO, ILLINOIS 60604

FACET ENGINEERING
4316 NORTH ELSTON AVENUE
CHICAGO, ILLINOIS 60641

CHICAGO DEPARTMENT OF TRANSPORTATION
DIVISION OF ENGINEERING

STATE / LAKE LOOP ELEVATED STATION
200 NORTH STATE STREET, CHICAGO, IL 60601

SCHEDULES - PANELS

CDOT PROJECT D-1-209

DATE: 9/9/2022

SPEC. NO.

DRAWING NO. E-617

REVISION NO.1

Branch Panel: R-PP-NW

Location: ELEC CL 106
Supply From:
Mounting: Surface
Enclosure: Type 1

Volts: 120/208 Wye
Phases: 3
Wires: 4

A.I.C. Rating: 65K
Mains Type: MCB
Mains Rating: 100 A
MCB Rating: 100 A

CKT	Circuit Description	Trip	Poles	A	B	C	Poles	Trip	Circuit Description	CKT
1	Receptacle	20 A	1	180 VA	180 VA		1	20 A	Receptacle	2
3	CAK RECEPT	20 A	1		180 VA					4
5										6
7										8
9										10
11										12
13										14
15										16
17										18
19										20
21										22
23										24
25										26
27										28
29										30
31										32
33										34
35										36
37										38
39										40
41										42
	Total Load:			360 VA	180 VA	0 VA				
	Total Amps:			3 A	2 A	0 A				

Load Classification	Connected Load	Demand Factor	Estimated Demand	Panel Totals	
Receptacle	540 VA	100.00%	540 VA		
				Total Conn. Load:	540 VA
				Total Est. Demand:	540 VA
				Total Conn. Current:	1 A
				Total Est. Demand Current:	1 A

Notes:

Branch Panel: N-LP-NW

Location: ELEC CL 106
Supply From:
Mounting: Surface
Enclosure: Type 1

Volts: 120/208 Wye
Phases: 3
Wires: 4

A.I.C. Rating: 65K
Mains Type: MCB
Mains Rating: 150 A
MCB Rating: 150 A

CKT	Circuit Description	Trip	Poles	A	B	C	Poles	Trip	Circuit Description	CKT
1	E-22	20 A	1	200 VA	672 VA		1	20 A	PLATFORM LTG TRAY LTG	2
3	HISTORIC CANOPY DN LTG	20 A	1		100 VA	734 VA	1	20 A	PLATFORM LTG TRAY LTG	4
5	HISTORIC CANOPY DN LTG	20 A	1			75 VA	616 VA	1	20 A	PLATFORM LTG TRAY LTG	6
7	HISTORIC CANOPY DN LTG	20 A	1	75 VA	165 VA		1	20 A	HIGH CANOPY UNPAID LTG	8
9	CENTER NW STAIR LTG	20 A	1		25 VA	132 VA	1	20 A	HIGH CANOPY UNPAID LTG	10
11	CENTER NW STAIR LTG	20 A	1			28 VA	132 VA	1	20 A	HIGH CANOPY UNPAID LTG	12
13	CENTER NW STAIR LTG	20 A	1	25 VA	35 VA		1	20 A	NW STAIR PLAT TO STREET LTG	14
15	FLYOVER LTG	20 A	1		64 VA	35 VA	1	20 A	NW STAIR PLAT TO STREET LTG	16
17	FLYOVER LTG	20 A	1			64 VA	32 VA	1	20 A	NW STAIR PLAT TO STREET LTG	18
19	FLYOVER LTG	20 A	1	64 VA	34 VA		1	20 A	N. CAK LTG	20
21	NW ELEC CL. LTG	20 A	1		45 VA	300 VA	1	20 A	NORTH FLYOVER STAIR HANDRAIL LTG	22
23	NW STAIR/ELEV SIGNAGE	20 A	1			400 VA	700 VA	1	20 A	N. CTA ILLUM SIGNAGE OVER STREET	24
25	UNPAID E22 SIGN	20 A	1	200 VA	600 VA			1	20 A	LTG TRAY PLATFORM SIGNAGE	26
27	NW ART LTG	20 A	1		300 VA						28
29	ARCH FARE ARRAY TRUSS LTG	20 A	1			144 VA					30
31	ARCH CANOPY LTG	20 A	1	240 VA							32
33	ARCH CANOPY LTG	20 A	1		304 VA						34
35	ARCH FARE ARRAY SCROLL LTG	20 A	1			144 VA					36
37	ARCH CANOPY LTG	20 A	1	352 VA	0 VA		3	90 A	SPD		38
39	ARCH CANOPY LTG	20 A	1		528 VA	0 VA	--	--	--		40
41	ARCH CANOPY LTG	20 A	1			240 VA	0 VA	--	--	--	42
	Total Load:			2662 VA	2567 VA	2575 VA				
	Total Amps:			22 A	21 A	21 A				

Load Classification	Connected Load	Demand Factor	Estimated Demand	Panel Totals	
Lighting	5403 VA	100.00%	5403 VA		
Other	2100 VA	100.00%	2100 VA	**Total Conn. Load:**	7803 VA
Power	300 VA	100.00%	300 VA	**Total Est. Demand:**	7803 VA
				Total Conn. Current:	22 A
				Total Est. Demand Current:	22 A

Notes:

Branch Panel: R-LP-NW

Location: ELEC CL 106
Supply From:
Mounting: Surface
Enclosure: Type 1

Volts: 120/208 Wye
Phases: 3
Wires: 4

A.I.C. Rating: 65K
Mains Type: MCB
Mains Rating: 150 A
MCB Rating: 150 A

CKT	Circuit Description	Trip	Poles	A	B	C	Poles	Trip	Circuit Description	CKT
1	Other	20 A	1	1400...	180 VA		1	20 A	PLAT RECEPT OUTSIDE ELEC CL.	2
3	PLATFORM LTG TRAY LTG	20 A	1		784 VA	75 VA	1	20 A	HISTORIC CANOPY DN LTG	4
5	HIGH CANOPY UNPAID LTG	20 A	1			66 VA	28 VA	1	20 A	CENTER NW STAIR LTG	6
7	NW STAIR PLAT TO STREET LTG	20 A	1	35 VA	68 VA			1	20 A	FLYOVER LTG	8
9	STREET NW DAS	20 A	1		1400...						10
11											12
13											14
15											16
17											18
19											20
21											22
23											24
25											26
27											28
29											30
31											32
33											34
35											36
37				0 VA			3	90 A	SPD		38
39					0 VA		--	--	--		40
41						0 VA	--	--	--		42
	Total Load:			1683 VA	2259 VA	94 VA				
	Total Amps:			16 A	21 A	1 A				

Load Classification	Connected Load	Demand Factor	Estimated Demand	Panel Totals	
Lighting	1056 VA	100.00%	1056 VA		
Other	2800 VA	100.00%	2800 VA	**Total Conn. Load:**	4036 VA
Receptacle	180 VA	100.00%	180 VA	**Total Est. Demand:**	4036 VA
				Total Conn. Current:	11 A
				Total Est. Demand Current:	11 A

Notes:

Branch Panel: N-PP-NW

Location: ELEC CL 106
Supply From:
Mounting: Surface
Enclosure: Type 1

Volts: 120/208 Wye
Phases: 3
Wires: 4

A.I.C. Rating: 65K
Mains Type: MCB
Mains Rating: 100 A
MCB Rating: 100 A

CKT	Circuit Description	Trip	Poles	A	B	C	Poles	Trip	Circuit Description	CKT
1	Receptacle	20 A	1	720 VA	720 VA		1	20 A	Receptacle	2
3	Receptacle	20 A	1		180 VA	180 VA				4
5	Receptacle	20 A	1			180 VA	696 VA	1	20 A	EF 2-1	6
7	Lighting	20 A	1	216 VA	696 VA		1	20 A	TE-2-1	8
9	TOILET RECEPT	20 A	1		180 VA	696 VA	1	20 A	EF-2-3	10
11	AC-2-3,CU-2-3	25 A	2			1664...	600 VA	1	20 A	ATM-NORTH	12
13	--	--	--	1664...	600 VA		1	20 A	CELL CHARGER	14
15	SVM-NORTH	20 A	1		600 VA	360 VA	1	20 A	CAK RECEPT	16
17	Receptacle	20 A	1			180 VA					18
19											20
21											22
23											24
25											26
27											28
29											30
31											32
33											34
35											36
37											38
39											40
41											42
	Total Load:			4616 VA	2196 VA	3320 VA				
	Total Amps:			40 A	18 A	29 A				

Load Classification	Connected Load	Demand Factor	Estimated Demand	Panel Totals	
ATM	1200 VA	100.00%	1200 VA		
Exhaust Fan	2088 VA	100.00%	2088 VA	**Total Conn. Load:**	10132 VA
HVAC	3328 VA	100.00%	3328 VA	**Total Est. Demand:**	10132 VA
Lighting	216 VA	100.00%	216 VA	**Total Conn. Current:**	28 A
Receptacle	2700 VA	100.00%	2700 VA	**Total Est. Demand Current:**	28 A
SVM	600 VA	100.00%	600 VA		

Notes:

NOTES:

1. PROVIDE POWER FEEDS FROM EACH PANEL CIRCUIT TO INDICATED LOAD. PROVIDE WIRE/CABLE SIZED PER CODE INCLUDING VOLTAGE DROP AND CONDUIT SIZE PER CODE.
2. ALL RACEWAYS TO BE INSTALLED CONCEALED FROM PUBLIC VISIBILITY.

DESIGN BY:										
DRAWN BY:										
CHECKED BY:										
APPROVED BY:		4	7/3/2023	ISSUED FOR BID	EM	SRM	SM			
CDOT/APPROVED BY:		NO.	DATE	REVISIONS	DES.	DRW.	CHK.	DCCO	CDOT	

TRANSYSTEMS
222 SOUTH RIVERSIDE PLAZA SUITE 610
CHICAGO, ILLINOIS 60606

SKIDMORE, OWINGS & MERRILL LLP
224 SOUTH MICHIGAN AVENUE, SUITE 1000
CHICAGO, ILLINOIS 60604

FACET ENGINEERING
4316 NORTH ELSTON AVENUE
CHICAGO, ILLINOIS 60641

CHICAGO DEPARTMENT OF TRANSPORTATION
DIVISION OF ENGINEERING

STATE / LAKE LOOP ELEVATED STATION
200 NORTH STATE STREET, CHICAGO, IL 60601

SCHEDULES - PANELS

CDOT PROJECT D-1-209

DATE: 9/9/2022

SPEC. NO.

DRAWING NO. E-618

REVISION NO.1

Branch Panel: N-LP-SE

Location: ELEC CL 115 | **Volts:** 120/208 Wye | **A.I.C. Rating:** 65K
Supply From: | **Phases:** 3 | **Mains Type:** MCB
Mounting: Surface | **Wires:** 4 | **Mains Rating:** 150 A
Enclosure: Type 1 | **MCB Rating:** 150 A

CKT	Circuit Description	Trip	Poles	A		B		C		Poles	Trip	Circuit Description	CKT
1	PLATFORM LTG TRAY LTG	20 A	1	560 VA	75 VA					1	20 A	HISTORIC CANOPY DN LTG	2
3	PLATFORM LTG TRAY LTG	20 A	1			504 VA	75 VA			1	20 A	HISTORIC CANOPY DN LTG	4
5	PLATFORM LTG TRAY LTG	20 A	1					504 VA	75 VA	1	20 A	HISTORIC CANOPY DN LTG	6
7	HIGH CANOPY UNPAID LTG	20 A	1	165 VA	28 VA					1	20 A	CENTER SE STAIR LTG	8
9	HIGH CANOPY UNPAID LTG	20 A	1			132 VA	28 VA			1	20 A	CENTER SE STAIR LTG	10
11	HIGH CANOPY UNPAID LTG	20 A	1					132 VA	25 VA	1	20 A	CENTER SE STAIR LTG	12
13	SE STAIR PLAT TO STREET LTG	20 A	1	32 VA	32 VA					1	20 A	S. ESCALATOR LTG	14
15	SE STAIR PLAT TO STREET LTG	20 A	1			32 VA	32 VA			1	20 A	S. ESCALATOR LTG	16
17	SE STAIR PLAT TO STREET LTG	20 A	1					28 VA	28 VA	1	20 A	S. ESCALATOR LTG	18
19	STREET LEVEL S. UTILITY RM LTG	20 A	1	45 VA	34 VA					1	20 A	S. CAK LTG	20
21	SE ELEC CL LTG	20 A	1			45 VA	90 VA			1	20 A	N. JANITOR/TOILET LTG	22
23	S. JANITOR/TOILET LTG	20 A	1					90 VA	100 VA	1	20 A	SOUTH ESC. SIGNAGE	24
25	SE STAIR SIGNAGE	20 A	1	100 VA	700 VA					1	20 A	S. CTA ILLUM SIGNAGE OVER STREET	26
27	UNPAID E22 SIGN	20 A	1			200 VA	42 VA			1	20 A	SE END OF PLAT LTG	28
29	ARCH FARE ARRAY TRUSS LTG	20 A	1					144 VA	200 VA	1	20 A	E-22	30
31	ARCH CANOPY LTG	20 A	1	224 VA	300 VA					1	20 A	SE ART LIGHTING	32
33	ARCH CANOPY LTG	20 A	1			240 VA							34
35	ARCH FARE ARRAY SCROLL LTG	20 A	1					144 VA					36
37	ARCH CANOPY LTG	20 A	1	224 VA	0 VA					3	90 A	SPD	38
39	ARCH CANOPY LTG	20 A	1			304 VA	0 VA			--	--	--	40
41	ARCH CANOPY LTG	20 A	1					352 VA	0 VA	--	--	--	42
		Total Load:		2518 VA		1723 VA		1822 VA					
		Total Amps:		21 A		14 A		15 A					

Load Classification	Connected Load	Demand Factor	Estimated Demand	Panel Totals	
Lighting	4421 VA	100.00%	4421 VA		
Other	1342 VA	100.00%	1342 VA	**Total Conn. Load:**	6063 VA
Power	300 VA	100.00%	300 VA	**Total Est. Demand:**	6063 VA
				Total Conn. Current:	17 A
				Total Est. Demand Current:	17 A

Notes:

Branch Panel: N-PP-SE

Location: ELEC CL 115 | **Volts:** 120/208 Wye | **A.I.C. Rating:** 65K
Supply From: | **Phases:** 3 | **Mains Type:** MCB
Mounting: Surface | **Wires:** 4 | **Mains Rating:** 100 A
Enclosure: Type 1 | **MCB Rating:** 100 A

CKT	Circuit Description	Trip	Poles	A		B		C		Poles	Trip	Circuit Description	CKT
1	Receptacle	20 A	1	540 VA	720 VA					1	20 A	Receptacle	2
3	Receptacle	20 A	1			180 VA	180 VA			1	20 A	Receptacle	4
5	Receptacle	20 A	1					180 VA	360 VA	1	20 A	UTILITY ROOM RECEPT	6
7	TE-2-2	20 A	1	696 VA	696 VA					1	20 A	EF-2-4	8
9	EF-2-2	20 A	1			696 VA	1664...			2	25 A	AC-2-4,CU-2-4	10
11	EF-10	20 A	1					696 VA	1664...	--	--	--	12
13	Lighting	20 A	1	216 VA	696 VA					1	20 A	EF-1-2	14
15	ATM-SOUTH	20 A	1			600 VA	600 VA			1	20 A	CELL CHARGER	16
17	SVM-SOUTH	20 A	1					600 VA	360 VA	1	20 A	CAK RECEPT	18
19	Receptacle	20 A	1	180 VA									20
21													22
23													24
25													26
27													28
29													30
31													32
33													34
35													36
37													38
39													40
41													42
		Total Load:		3744 VA		3920 VA		3860 VA					
		Total Amps:		31 A		33 A		32 A					

Load Classification	Connected Load	Demand Factor	Estimated Demand	Panel Totals	
ATM	1200 VA	100.00%	1200 VA		
Exhaust Fan	3480 VA	100.00%	3480 VA	**Total Conn. Load:**	11524 VA
HVAC	3328 VA	100.00%	3328 VA	**Total Est. Demand:**	11524 VA
Lighting	216 VA	100.00%	216 VA	**Total Conn. Current:**	32 A
Receptacle	2700 VA	100.00%	2700 VA	**Total Est. Demand Current:**	32 A
SVM	600 VA	100.00%	600 VA		

Notes:

Branch Panel: R-LP-SE

Location: ELEC CL 115 | **Volts:** 120/208 Wye | **A.I.C. Rating:** 65K
Supply From: | **Phases:** 3 | **Mains Type:** MCB
Mounting: Surface | **Wires:** 4 | **Mains Rating:** 150 A
Enclosure: Type 1 | **MCB Rating:** 150 A

CKT	Circuit Description	Trip	Poles	A		B		C		Poles	Trip	Circuit Description	CKT
1	Other	20 A	1	1400...	672 VA					1	20 A	PLATFORM LTG TRAY LTG	2
3	HISTORIC CANOPY DN LTG	20 A	1			100 VA	66 VA			1	20 A	HIGH CANOPY UNPAID LTG	4
5	CENTER SE STAIR LTG	20 A	1					28 VA	32 VA	1	20 A	SE STAIR PLAT TO STREET LTG	6
7	S. ESCALATOR LTG	20 A	1	32 VA	1400...					1	20 A	STREET SE DAS	8
9													10
11													12
13													14
15													16
17													18
19													20
21													22
23													24
25													26
27													28
29													30
31													32
33													34
35													36
37					0 VA					3	90 A	SPD	38
39							0 VA			--	--	--	40
41									0 VA	--	--	--	42
		Total Load:		3504 VA		166 VA		60 VA					
		Total Amps:		29 A		2 A		0 A					

Load Classification	Connected Load	Demand Factor	Estimated Demand	Panel Totals	
Lighting	929 VA	100.00%	929 VA		
Other	2800 VA	100.00%	2800 VA	**Total Conn. Load:**	3729 VA
				Total Est. Demand:	3729 VA
				Total Conn. Current:	10 A
				Total Est. Demand Current:	10 A

Notes:

Branch Panel: R-PP-SE

Location: ELEC CL 115 | **Volts:** 120/208 Wye | **A.I.C. Rating:** 65K
Supply From: | **Phases:** 3 | **Mains Type:** MCB
Mounting: Surface | **Wires:** 4 | **Mains Rating:** 100 A
Enclosure: Type 1 | **MCB Rating:** 100 A

CKT	Circuit Description	Trip	Poles	A		B		C		Poles	Trip	Circuit Description	CKT
1	Receptacle	20 A	1	180 VA	1176...					1	20 A	SP-8	2
3	DBP-2	20 A	3			901 VA	500 VA			1	20 A	Other	4
5	--	--	--					901 VA	180 VA	1	20 A	Receptacle	6
7	--	--	--	901 VA									8
9													10
11													12
13													14
15													16
17													18
19													20
21													22
23													24
25													26
27													28
29													30
31													32
33													34
35													36
37													38
39													40
41													42
		Total Load:		2257 VA		1401 VA		1081 VA					
		Total Amps:		19 A		12 A		9 A					

Load Classification	Connected Load	Demand Factor	Estimated Demand	Panel Totals	
BOOSTER PUMP	2702 VA	100.00%	2702 VA		
Other	500 VA	100.00%	500 VA	**Total Conn. Load:**	4738 VA
Receptacle	360 VA	100.00%	360 VA	**Total Est. Demand:**	4738 VA
Sump Pump	1176 VA	100.00%	1176 VA	**Total Conn. Current:**	13 A
				Total Est. Demand Current:	13 A

Notes:

NOTES:

1. PROVIDE POWER FEEDS FROM EACH PANEL CIRCUIT TO INDICATED LOAD. PROVIDE WIRE/CABLE SIZED PER CODE INCLUDING VOLTAGE DROP AND CONDUIT SIZE PER CODE.
2. ALL RACEWAYS TO BE INSTALLED CONCEALED FROM PUBLIC VISIBILITY.

DESIGN BY:										
DRAWN BY:										
CHECKED BY:										
APPROVED BY:		4	7/3/2023	ISSUED FOR BID	EM	SRM	SM			
CDOT/APPROVED BY:		NO.	DATE	REVISIONS	DES.	DRW.	CHK.	DCCO	CDOT	

TRANSYSTEMS
222 SOUTH RIVERSIDE PLAZA SUITE 610
CHICAGO, ILLINOIS 60606

SKIDMORE, OWINGS & MERRILL LLP
224 SOUTH MICHIGAN AVENUE, SUITE 1000
CHICAGO, ILLINOIS 60604

FACET ENGINEERING
4316 NORTH ELSTON AVENUE
CHICAGO, ILLINOIS 60641

CHICAGO DEPARTMENT OF TRANSPORTATION
DIVISION OF ENGINEERING

STATE / LAKE LOOP ELEVATED STATION
200 NORTH STATE STREET, CHICAGO, IL 60601

SCHEDULES - PANELS

CDOT PROJECT D-1-209 | DATE: 9/9/2022

SPEC. NO.

DRAWING NO. E-619

REVISION NO.1

Branch Panel: N-ELEV-NW

Location: ELEV MACH RM 101 | **Volts:** 120/208 Wye | **A.I.C. Rating:** 65K
Supply From: | **Phases:** 3 | **Mains Type:** MCB
Mounting: Surface | **Wires:** 4 | **Mains Rating:** 150 A
Enclosure: Type 1 | **MCB Rating:** 225 A

CKT	Circuit Description	Trip	Poles	A		B		C		Poles	Trip	Circuit Description	CKT
1	CB-ELEV-NW	90 A	3	7125...	1000...					1	20 A	SILL HEATER PLATFORM	2
3	--	--	--			7125...	1000...			1	20 A	SILL HEATER FLYOVER	4
5	--	--	--					7125...	500 VA	1	20 A	PIT FLOAT SWITCH	6
7	ELEV RM RECEPT	20 A	1	180 VA	45 VA					1	20 A	ELEV MACH RM LTG	8
9	ELEV PIT LIGHTING	20 A	1			53 VA	2600...			2	35 A	AC-2-1,CU-2-1	10
11	EUH 2-1	20 A	3					1002...	2600...	--	--	--	12
13	--	--	--	1002...	1176...					1	20 A	SP-3	14
15	--	--	--			1002...							16
17													18
19													20
21													22
23													24
25													26
27													28
29													30
31													32
33													34
35													36
37													38
39													40
41													42
		Total Load:		10527 VA		11779 VA		11226 VA					
		Total Amps:		88 A		99 A		94 A					

Load Classification	Connected Load	Demand Factor	Estimated Demand	Panel Totals	
AC	0 VA	0.00%	0 VA		
HEAT	3005 VA	100.00%	3005 VA	**Total Conn. Load:**	33533 VA
HVAC	5200 VA	100.00%	5200 VA	**Total Est. Demand:**	38876 VA
Heating	2000 VA	100.00%	2000 VA	**Total Conn. Current:**	93 A
Lighting	98 VA	100.00%	98 VA	**Total Est. Demand Current:**	108 A
Motor	21375 VA	125.00%	26718 VA		
Other	500 VA	100.00%	500 VA		
Receptacle	180 VA	100.00%	180 VA		
Sump Pump	1176 VA	100.00%	1176 VA		

Notes:

Branch Panel: N-ELEV-NE

Location: ELEV MACH RM 001 | **Volts:** 120/208 Wye | **A.I.C. Rating:** 65K
Supply From: | **Phases:** 3 | **Mains Type:** MCB
Mounting: Surface | **Wires:** 4 | **Mains Rating:** 150 A
Enclosure: TYPE 4X SS | **MCB Rating:** 225 A

CKT	Circuit Description	Trip	Poles	A		B		C		Poles	Trip	Circuit Description	CKT
1	CB-ELEV-NE	90 A	3	7125...	1000...					1	20 A	SILL HEATER STREET LEVEL	2
3	--	--	--			7125...	500 VA			1	20 A	PIT FLOAT SWITCH	4
5	--	--	--					7125...	180 VA	1	20 A	ELEV PIT RECEPTACLE	6
7					2600...					2	35 A	AC-1-1, CU-1-1	8
9	ELEV RM RECEPT	20 A	1			180 VA	2600...			--	--	--	10
11	SILL HEATER PLATFORM	20 A	1					1000...	0 VA	1	20 A	Spare	12
13	ECH-1-1 PIT	20 A	3	1334...	1000...					3	20 A	EUH-1-1	14
15	--	--	--			1334...	1000...			--	--	--	16
17	--	--	--					1334...	1000...	--	--	--	18
19	ELEV CAB LTG	20 A	1	500 VA	53 VA					1	20 A	ELEV PIT LIGHT	20
21	ELEV MACH RM LTG	20 A	1			45 VA	1176...			1	20 A	SP-1	22
23													24
25													26
27													28
29													30
31													32
33													34
35													36
37													38
39													40
41													42
		Total Load:		13612 VA		13960 VA		10639 VA					
		Total Amps:		117 A		120 A		89 A					

Load Classification	Connected Load	Demand Factor	Estimated Demand	Panel Totals	
HEAT	7004 VA	100.00%	7004 VA		
HVAC	5200 VA	100.00%	5200 VA	**Total Conn. Load:**	38212 VA
Heating	2000 VA	100.00%	2000 VA	**Total Est. Demand:**	43555 VA
Lighting	598 VA	100.00%	598 VA	**Total Conn. Current:**	106 A
Motor	21375 VA	125.00%	26718 VA	**Total Est. Demand Current:**	121 A
Other	500 VA	100.00%	500 VA		
PUMP	0 VA	0.00%	0 VA		
Receptacle	360 VA	100.00%	360 VA		
Sump Pump	1176 VA	100.00%	1176 VA		

Notes:

Branch Panel: N-ELEV-SW

Location: ELEV MACH RM 111 | **Volts:** 120/208 Wye | **A.I.C. Rating:** 65K
Supply From: | **Phases:** 3 | **Mains Type:** MCB
Mounting: Surface | **Wires:** 4 | **Mains Rating:** 150 A
Enclosure: Type 1 | **MCB Rating:** 225 A

CKT	Circuit Description	Trip	Poles	A		B		C		Poles	Trip	Circuit Description	CKT
1	CB-ELEV-SW	90 A	3	7125...	1000...					1	20 A	SILL HTR PLATFORM	2
3	--	--	--			7125...	1000...			1	20 A	SILL HTR FLYOVER	4
5	--	--	--					7125...	500 VA	1	20 A	PIT FLOAT SWITCH	6
7	ELEV ROOM RECEPT	20 A	1	180 VA	45 VA					1	20 A	ELEV MACH RM LTG	8
9	ELEV PIT LIGHT	20 A	1			53 VA	2600...			2	35 A	AC-2-2, CU-2-2	10
11	EUH-2-2	20 A	3					1002...	2600...	--	--	--	12
13	--	--	--	1002...	1176...					1	20 A	SP-4	14
15	--	--	--			1002...							16
17													18
19													20
21													22
23													24
25													26
27													28
29													30
31													32
33													34
35													36
37													38
39													40
41													42
		Total Load:		10527 VA		11779 VA		11226 VA					
		Total Amps:		88 A		99 A		94 A					

Load Classification	Connected Load	Demand Factor	Estimated Demand	Panel Totals	
AC	0 VA	0.00%	0 VA		
HEAT	3005 VA	100.00%	3005 VA	**Total Conn. Load:**	33533 VA
HVAC	5200 VA	100.00%	5200 VA	**Total Est. Demand:**	38876 VA
Heating	2000 VA	100.00%	2000 VA	**Total Conn. Current:**	93 A
Lighting	98 VA	100.00%	98 VA	**Total Est. Demand Current:**	108 A
Motor	21375 VA	125.00%	26718 VA		
Other	500 VA	100.00%	500 VA		
Receptacle	180 VA	100.00%	180 VA		
Sump Pump	1176 VA	100.00%	1176 VA		

Notes:

Branch Panel: N-ELEV-SE

Location: ELEV MACH RM 011 | **Volts:** 120/208 Wye | **A.I.C. Rating:** 65K
Supply From: | **Phases:** 3 | **Mains Type:** MCB
Mounting: Surface | **Wires:** 4 | **Mains Rating:** 150 A
Enclosure: TYPE 4X SS | **MCB Rating:** 225 A

CKT	Circuit Description	Trip	Poles	A		B		C		Poles	Trip	Circuit Description	CKT
1	CB-ELEV-SE	90 A	3	7125...	1000...					1	20 A	SILL HEATER STREET LEVEL	2
3	--	--	--			7125...	500 VA			1	20 A	PIT FLOAT SW	4
5	--	--	--					7125...	180 VA	1	20 A	ELEV PIT RECEPT	6
7					2600...					2	35 A	AC-1-2, CU-1-2	8
9	ELEV RM RECEPT	20 A	1			180 VA	2600...			--	--	--	10
11	SILL HEATER PLATFORM	20 A	1					1000...	0 VA	1	20 A	Spare	12
13	ECH-1-2 PIT	20 A	3	1334...	1002...					3	20 A	EUH 1-2	14
15	--	--	--			1334...	1002...			--	--	--	16
17	--	--	--					1334...	1002...	--	--	--	18
19	ELEV CAB LTG	20 A	1	500 VA	53 VA					1	20 A	ELEV PIT LIGHT	20
21	ELEV MACH RM LTG	20 A	1			45 VA	1176...			1	20 A	Sump Pump	22
23													24
25													26
27													28
29													30
31													32
33													34
35													36
37													38
39													40
41													42
		Total Load:		13613 VA		13962 VA		10641 VA					
		Total Amps:		117 A		120 A		89 A					

Load Classification	Connected Load	Demand Factor	Estimated Demand	Panel Totals	
HEAT	7007 VA	100.00%	7007 VA		
HVAC	5200 VA	100.00%	5200 VA	**Total Conn. Load:**	38215 VA
Heating	2000 VA	100.00%	2000 VA	**Total Est. Demand:**	43559 VA
Lighting	598 VA	100.00%	598 VA	**Total Conn. Current:**	106 A
Motor	21375 VA	125.00%	26718 VA	**Total Est. Demand Current:**	121 A
Other	500 VA	100.00%	500 VA		
PUMP	0 VA	0.00%	0 VA		
Receptacle	360 VA	100.00%	360 VA		
Sump Pump	1176 VA	100.00%	1176 VA		

Notes:

NOTES:

1. PROVIDE POWER FEEDS FROM EACH PANEL CIRCUIT TO INDICATED LOAD. PROVIDE WIRE/CABLE SIZED PER CODE INCLUDING VOLTAGE DROP AND CONDUIT SIZE PER CODE.
2. ALL RACEWAYS TO BE INSTALLED CONCEALED FROM PUBLIC VISIBILITY.

DESIGN BY:										
DRAWN BY:										
CHECKED BY:										
APPROVED BY:		4	7/3/2023	ISSUED FOR BID	JM	EM	SM			
CDOT/APPROVED BY:		NO.	DATE	REVISIONS	DES.	DRW.	CHK.	DCCO	CDOT	

TRANSYSTEMS
222 SOUTH RIVERSIDE PLAZA SUITE 610
CHICAGO, ILLINOIS 60606

SKIDMORE, OWINGS & MERRILL LLP
224 SOUTH MICHIGAN AVENUE, SUITE 1000
CHICAGO, ILLINOIS 60604

FACET ENGINEERING
4316 NORTH ELSTON AVENUE
CHICAGO, ILLINOIS 60641

CHICAGO DEPARTMENT OF TRANSPORTATION
DIVISION OF ENGINEERING

STATE / LAKE LOOP ELEVATED STATION
200 NORTH STATE STREET, CHICAGO, IL 60601

SCHEDULES - PANELS

CDOT PROJECT D-1-209 | DATE: 9/9/2022

SPEC. NO.

DRAWING NO. E-620

REVISION NO.1

Branch Panel: N-ESC1

Location: ESC CONTROL RM 002
Supply From:
Mounting: Surface
Enclosure: TYPE 4X SS

Volts: 120/208 Wye
Phases: 3
Wires: 4

A.I.C. Rating: 65K
Mains Type: MCB
Mains Rating: 225 A
MCB Rating: 225 A

CKT	Circuit Description	Trip	Poles	A		B		C		Poles	Trip	Circuit Description	CKT
1	CB-ESC1	100 A	3	7125...	1176...					1	20 A	SP-5	2
3	--	--	--			7125...	1000...			1	20 A	SILL COMB HEATER	4
5	--	--	--					7125...					6
7	ESC RM RECEPT	20 A	1	180 VA	1002...					3	20 A	EUH-2-5 PIT HEATER	8
9	PIT RECEPT	20 A	1			180 VA	1002...			--	--	--	10
11	ESC PIT LIGHT	20 A	1					53 VA	1002...	--	--	--	12
13	Truss Htr	30 A	3	2000...	2000...					3	30 A	Truss Htr	14
15	--	--	--			2000...	2000...			--	--	--	16
17	--	--	--					2000...	2000...	--	--	--	18
19	EUH-1-3 ESC RM	20 A	3	1002...	2600...					2	35 A	AC-1-3, CU-1-3	20
21	--	--	--			1002...	2600...			--	--	--	22
23	--	--	--					1002...	0 VA	1	20 A	Spare	24
25	ESC CONTROL RM LTG	20 A	1	45 VA									26
27													28
29													30
31													32
33													34
35													36
37													38
39													40
41													42
		Total Load:		17129 VA		16908 VA		13180 VA					
		Total Amps:		148 A		146 A		110 A					

Load Classification	Connected Load	Demand Factor	Estimated Demand	Panel Totals	
HEAT	6009 VA	100.00%	6009 VA		
HVAC	5200 VA	100.00%	5200 VA	**Total Conn. Load:**	47217 VA
Heating	1000 VA	100.00%	1000 VA	**Total Est. Demand:**	52561 VA
Lighting	98 VA	100.00%	98 VA	**Total Conn. Current:**	131 A
Motor	21375 VA	125.00%	26718 VA	**Total Est. Demand Current:**	146 A
Receptacle	360 VA	100.00%	360 VA		
Sump Pump	1176 VA	100.00%	1176 VA		
Truss Htr	12000 VA	100.00%	12000 VA		

Notes:

Branch Panel: R-ESC2

Location: ESC CONTROL RM 012
Supply From:
Mounting: Surface
Enclosure: TYPE 4X SS

Volts: 120/208 Wye
Phases: 3
Wires: 4

A.I.C. Rating: 65K
Mains Type: MCB
Mains Rating: 225 A
MCB Rating: 225 A

CKT	Circuit Description	Trip	Poles	A		B		C		Poles	Trip	Circuit Description	CKT
1	CB-ESC2	100 A	3	7125...	1176...					1	20 A	SP-6	2
3	--	--	--			7125...	1000...			1	20 A	SILL COMB HEATER	4
5	--	--	--					7125...					6
7	ESC RM RECEPT	20 A	1	180 VA	1002...					3	20 A	EUH-2-6 PIT EUH	8
9	PIT RECEPT	20 A	1			180 VA	1002...			--	--	--	10
11	ESC PIT LIGHTING	20 A	1					53 VA	1002...	--	--	--	12
13	Truss Htr	30 A	3	2000...	2000...					3	30 A	Truss Htr	14
15	--	--	--			2000...	2000...			--	--	--	16
17	--	--	--					2000...	2000...	--	--	--	18
19	EUH-1-4 ESC RM	20 A	3	1002...	2600...					2	35 A	AC-1-4, CU-1-4	20
21	--	--	--			1002...	2600...			--	--	--	22
23	--	--	--					1002...	0 VA	1	20 A	Spare	24
25	ESC CONTROL RM LTG	20 A	1	45 VA									26
27													28
29													30
31													32
33													34
35													36
37													38
39													40
41													42
		Total Load:		17129 VA		16908 VA		13180 VA					
		Total Amps:		148 A		146 A		110 A					

Load Classification	Connected Load	Demand Factor	Estimated Demand	Panel Totals	
HEAT	6009 VA	100.00%	6009 VA		
HVAC	5200 VA	100.00%	5200 VA	**Total Conn. Load:**	47217 VA
Heating	1000 VA	100.00%	1000 VA	**Total Est. Demand:**	52561 VA
Lighting	98 VA	100.00%	98 VA	**Total Conn. Current:**	131 A
Motor	21375 VA	125.00%	26718 VA	**Total Est. Demand Current:**	146 A
Receptacle	360 VA	100.00%	360 VA		
Sump Pump	1176 VA	100.00%	1176 VA		
Truss Htr	12000 VA	100.00%	12000 VA		

Notes:

Branch Panel: R-CP

Location: COMM RM 201
Supply From:
Mounting: Surface
Enclosure: Type 1

Volts: 120/208 Wye
Phases: 3
Wires: 4

A.I.C. Rating: 65K
Mains Type: MCB
Mains Rating: 100 A
MCB Rating: 100 A

CKT	Circuit Description	Trip	Poles	A		B		C		Poles	Trip	Circuit Description	CKT
1	FO CABINET	20 A	1	500 VA	500 VA					1	20 A	SCADA CABINET	2
3	CCTV CABINET	20 A	1			500 VA	180 VA			1	20 A	COMM RM LTG	4
5	PA CABINET	20 A	1					500 VA	0 VA	1	20 A	Spare	6
7	NORTH CAK SVT	20 A	1	500 VA	0 VA					1	20 A	SOUTH CAK SVT	8
9	NORTH CAK AV	20 A	1			500 VA	0 VA			1	20 A	SOUTH CAK AV	10
11	Receptacle	20 A	1					540 VA	540 VA	1	20 A	Receptacle	12
13	UPS-1	20 A	2	750 VA	750 VA					2	20 A	UPS-1 BYPASS	14
15	--	--	--			750 VA	750 VA			--	--	--	16
17	UPS-2	20 A	2					750 VA	750 VA	2	20 A	UPS-2 BYPASS	18
19	--	--	--	750 VA	750 VA					--	--	--	20
21	HUB-1	30 A	2			1000...	1000...			2	20 A	HUB-3	22
23	--	--	--					1000...	1000...	--	--	--	24
25	HUB-4	30 A	2	1000...	1000...					2	20 A	HUB-2	26
27	--	--	--			1000...	1000...			--	--	--	28
29	AC-M-2,AC-M-2	35 A	2					2600...	2600...	2	35 A	AC-M-1, CU-M-1	30
31	--	--	--	2600...	2600...					--	--	--	32
33	ECH-M-1	20 A	3			1334...	1334...			3	20 A	ECH-M-2	34
35	--	--	--					1334...	1334...	--	--	--	36
37	--	--	--	1334...	1334...					--	--	--	38
39	Spare	20 A	1			0 VA	0 VA			1	20 A	Spare	40
41	Spare	20 A	1					0 VA	0 VA	1	20 A	Spare	42
		Total Load:		13886 VA		9093 VA		12680 VA					
		Total Amps:		120 A		76 A		110 A					

Load Classification	Connected Load	Demand Factor	Estimated Demand	Panel Totals	
HEAT	8005 VA	100.00%	8005 VA		
HVAC	10400 VA	100.00%	10400 VA	**Total Conn. Load:**	35647 VA
Lighting	180 VA	100.00%	180 VA	**Total Est. Demand:**	35647 VA
Other	13297 VA	100.00%	13297 VA	**Total Conn. Current:**	99 A
Power	2000 VA	100.00%	2000 VA	**Total Est. Demand Current:**	99 A
Receptacle	1080 VA	100.00%	1080 VA		
Spare	1000 VA	100.00%	1000 VA		

Notes:

NOTES:

1. PROVIDE POWER FEEDS FROM EACH PANEL CIRCUIT TO INDICATED LOAD. PROVIDE WIRE/CABLE SIZED PER CODE INCLUDING VOLTAGE DROP AND CONDUIT SIZE PER CODE.
2. ALL RACEWAYS TO BE INSTALLED CONCEALED FROM PUBLIC VISIBILITY.

NO.	DATE	REVISIONS	DES.	DRW.	CHK.	DCCO	CDOT
4	7/3/2023	ISSUED FOR BID	JM	EM	SM		

DESIGN BY:
DRAWN BY:
CHECKED BY:
APPROVED BY:
CDOT/APPROVED BY:

TRANSYSTEMS
222 SOUTH RIVERSIDE PLAZA SUITE 610
CHICAGO, ILLINOIS 60606

SKIDMORE, OWINGS & MERRILL LLP
224 SOUTH MICHIGAN AVENUE, SUITE 1000
CHICAGO, ILLINOIS 60604

FACET ENGINEERING
4316 NORTH ELSTON AVENUE
CHICAGO, ILLINOIS 60641

CHICAGO DEPARTMENT OF TRANSPORTATION
DIVISION OF ENGINEERING

STATE / LAKE LOOP ELEVATED STATION
200 NORTH STATE STREET, CHICAGO, IL 60601

SCHEDULES - PANELS

CDOT PROJECT D-1-209

DATE: 9/9/2022

SPEC. NO.

DRAWING NO. E-621

REVISION NO.1

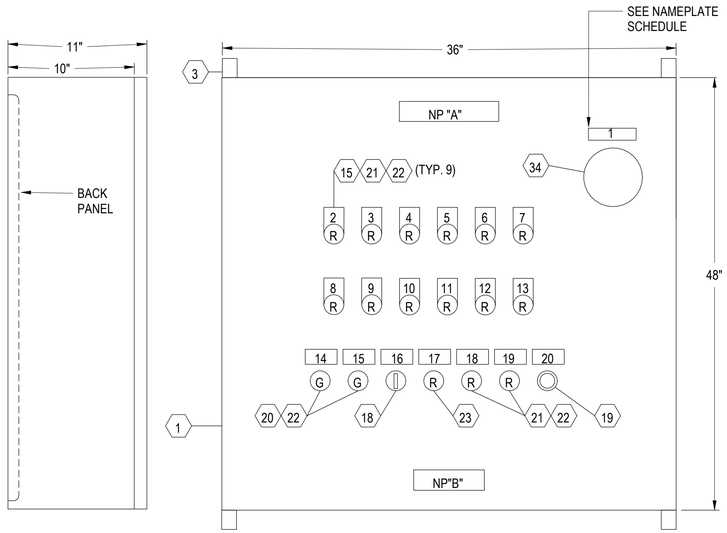

LEFT SIDE VIEW

FRONT VIEW

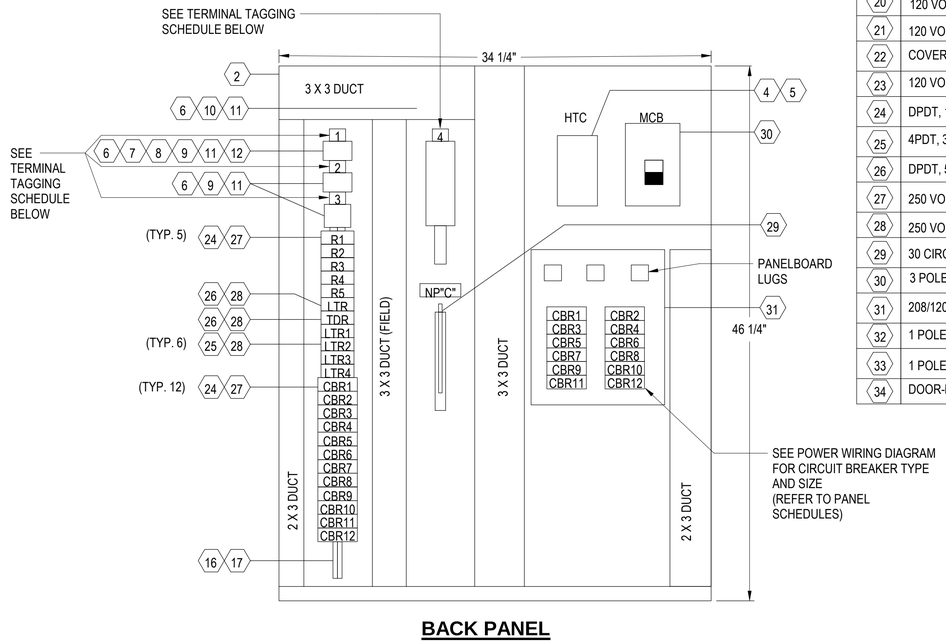

BACK PANEL

LEGEND

ITEM	DESCRIPTION
1	48" HIGH X 36" WIDE X 10" DEEP, NEMA 12, CARBON STEEL ENCLOSURE
2	46 1/4" HIGH X 34 1/4" WIDE BACK PANEL
3	MOUNTING FOOT KIT
4	3 POLE, 200 AMP RESISTIVE, 120 VOLT COIL, 600 VOLT, IEC CONTACTOR
5	1-NO AND NC AUXILIARY CONTACT BLOCK
6	TYPE SCHT5, LABLE HOLDER AND CLEAR COVER
7	TYPE WSI 6/2 LED, 600 VAC, 16 AMP, FUSE TERMINAL BLOCK
8	TYPE WAP 2/5-10, FUSE END SECTION
9	TYPE WDU4, 600 VAC, 35 AMP, #22 - #10 AWG, WEMID, TERMINAL
10	TYPE WDU10, 600 VAC, 65 AMP, # 18 - #6 AWG, WEMID, TERMINAL BLOCK
11	TYPE WEW 35/2, WEMID END SECTION/ END BRACKET
12	5 AMP, 250 VOLT, 1/4" X 1 1/4" FUSE
13	2" WIDE X 3" HIGH WHITE WIRE DUCT WITH COVER
14	3" WIDE X 3" HIGH WHITE WIRE DUCT WITH COVER
15	GRAVOPLY LEGEND PLATE
16	RELAY SOCKET MOUNTING RAIL
17	END CLAMP
18	3 POSITION, MAINTAINED, FINGER-SAFE SELECTOR SWITCH
19	1 NO., BLACK, MOMENTARY, FINGER-SAFE PUSH BUTTON
20	120 VOLT AC, GREEN LED, PILOT LIGHT
21	120 VOLT AC, RED LED, PILOT LIGHT
22	COVER FOR "APW" PILOT LIGHT
23	120 VOLT AC, RED LED, MOMENTARY, FINGER-SAFE ILLUMINATED PUSH BUTTON
24	DPDT, 10 AMP, 120 VOLT AC COIL, BLADE TYPE RELAY
25	4PDT, 3 AMP, 120 VOLT AC COIL, BLADE TYPE RELAY
26	DPDT, 5 AMP, 120 VOLT AC COIL, ADJUSTABLE 3 SEC TO 30 MIN TIME RANGE, ON DELAY, TIMER
27	250 VOLT, 10 AMP, 8 BLADE, FINGER-SAFE SOCKET
28	250 VOLT, 7 AMP, 14 BLADE, FINGER-SAFE SOCKET
29	30 CIRCUIT, 200 AMP, EQUIPMENT GROUND BAR WITH ONE #1- #4/0 LUGS
30	3 POLE, 150 AMP, 100,000 AIC, 240 VOLT, THERMAL MAGNETIC MAIN CIRCUIT BREAKER
31	208/120 VOLT, 3 PHASE, 4 WIRE, 225 AMP, MAIN LUGS ONLY, COPPER BUS, 12 SPACE, PANELBOARD
32	1 POLE, 20 AMP, 120 VOLT, BOLT-ON, 30 MILLIAMP GROUND FAULT TRIP, CIRCUIT
33	1 POLE CIRCUIT BREAKER HANDLE PADLOCK
34	DOOR-MOUNTED CIRCUIT BREAKER OPERATING MECHANISM

NAMEPLATE SCHEDULE

NP	FIRST LINE	SECOND LINE	NP	FIRST LINE	SECOND LINE
1	MAIN DISCONNECT		13	CIRCUIT BREAKER	NO. 12 OFF
2	CIRCUIT BREAKER	NO. 1 OFF	14	POWER ON	
3	CIRCUIT BREAKER	NO. 2 OFF	15	HEAT TRACE CONTACTOR	ENERGIZED
4	CIRCUIT BREAKER	NO. 3 OFF	16	HEAT TRACE	HAND OFF AUTO
5	CIRCUIT BREAKER	NO. 4 OFF	17	COMMON ALARM	PUSH TO ACKNOWLEDGE
6	CIRCUIT BREAKER	NO. 5 OFF	18	HEAT TRACE CONTACTOR	FAILURE ALARM
7	CIRCUIT BREAKER	NO. 6 OFF	19	HEAT TRACE	LOW TEMP.
8	CIRCUIT BREAKER	NO. 7 OFF	20	LAMP TEST	
9	CIRCUIT BREAKER	NO. 8 OFF	A	HTC - #	
10	CIRCUIT BREAKER	NO. 9 OFF	B	SEE LEGEND BELOW	
11	CIRCUIT BREAKER	NO. 10 OFF	C	GRD BUS	
12	CIRCUIT BREAKER	NO. 11 OFF			

TERMINAL TAGGING SCHEDULE

NP	FIRST LINE	SECOND LINE	THIRD LINE
1	TB1	FUSE FU1 5 AMP	CONTROL POWER
2	TB2	AMBIENT THERMOSTAT	INPUT
3	TB3	ALARM	OUTPUT
4	TB4	LOAD POWER	

NAMEPLATE "A"

MATERIAL:
1 1/4"X 7" WHITE GRAVOPLY WITH BLACK LETTERS.
FOAM ADHESIVE TAPE. 1/4" LETTER SIZE N.T.S.

NAMEPLATE "B"

MATERIAL:
3 1/2"X 4" WHITE GRAVOPLY WITH BLACK LETTERS.
FOAM ADHESIVE TAPE. 1/8" AND 1/4" LETTER SIZE N.T.S.

USE 75°C MINIMUM COPPER CONDUCTORS FOR FIELD WIRE

NAMEPLATE "C"

MATERIAL:
1"X 2" WHITE GRAVOPLY WITH BLACK LETTERS.
FOAM ADHESIVE TAPE. 3/16" LETTER SIZE N.T.S.

1 HEAT TRACE FREEZE PROTECTION PANEL HTC

NTS

NO.	DATE	REVISIONS	DES.	DRW.	CHK.	DCCO	CDOT
4	7/3/2023	ISSUED FOR BID	JM	EM	OS		

DESIGN BY:
DRAWN BY:
CHECKED BY:
APPROVED BY:
CDOT/APPROVED BY:

TRANSYSTEMS
222 SOUTH RIVERSIDE PLAZA SUITE 610
CHICAGO, ILLINOIS 60606

SKIDMORE, OWINGS & MERRILL LLP
224 SOUTH MICHIGAN AVENUE, SUITE 1000
CHICAGO, ILLINOIS 60604

FACET ENGINEERING
4316 NORTH ELSTON AVENUE
CHICAGO, ILLINOIS 60641

CHICAGO DEPARTMENT OF TRANSPORTATION
DIVISION OF ENGINEERING

STATE / LAKE LOOP ELEVATED STATION
200 NORTH STATE STREET, CHICAGO, IL 60601

DIAGRAMS - HEAT TRACE PANEL WIRING PART 1

SPEC. NO.

DRAWING NO. E-623

CDOT PROJECT D-1-209

DATE: 9/9/2022

REVISION NO.

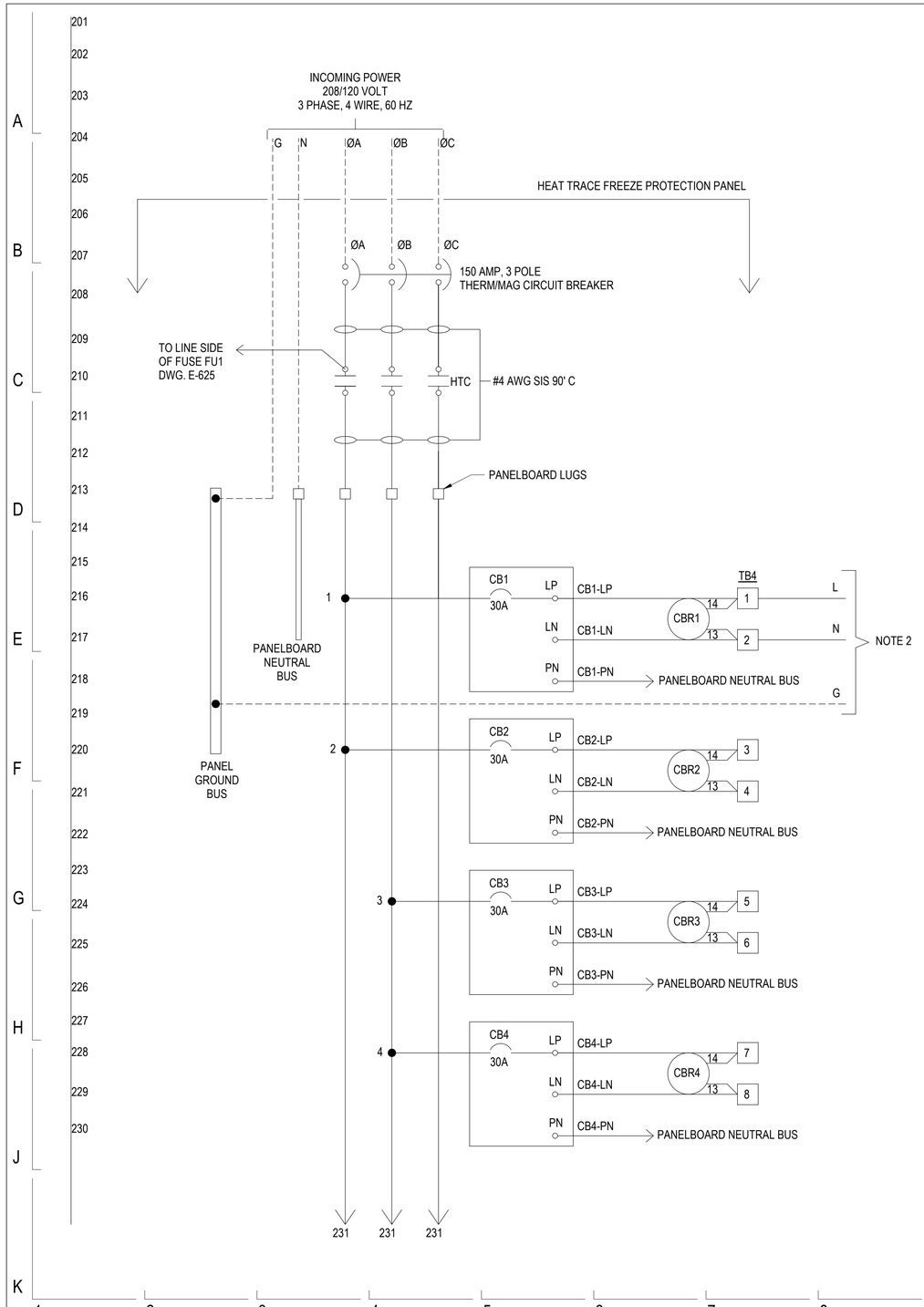

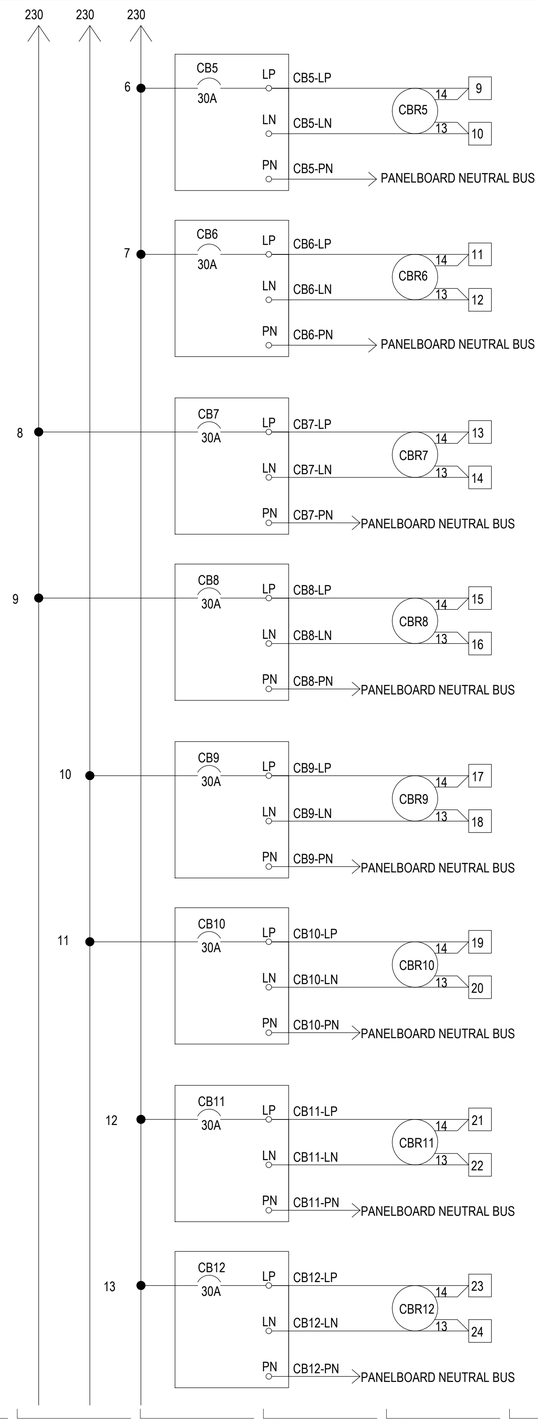

NOTES
1. DASHED LINES INDICATE FIELD WIRING.
2. PROVIDE 2-#10AWG AND 1-#10AWG(G) FOR UP TO 100' POWER FEEDS, 2-#8AWG AND 1-#8AWG(G) FOR 100' TO 150' POWER FEEDS, AND 2-#6AWG AND 1-#6AWG(G) FOR OVER 150' POWER FEEDS PER CIRCUIT. PROVIDE UP TO A MAXIMUM OF 3 CIRCUITS PER HOME RUN.

DESIGN BY:										
DRAWN BY:										
CHECKED BY:										
APPROVED BY:		4	7/3/2023	ISSUED FOR BID	JM	EM	OS			
CDOT/APPROVED BY:		NO.	DATE	REVISIONS	DES.	DRW.	CHK.	DCCO	CDOT	

TRANSYSTEMS
222 SOUTH RIVERSIDE PLAZA SUITE 610
CHICAGO, ILLINOIS 60606

SKIDMORE, OWINGS & MERRILL LLP
224 SOUTH MICHIGAN AVENUE, SUITE 1000
CHICAGO, ILLINOIS 60604

FACET ENGINEERING
4316 NORTH ELSTON AVENUE
CHICAGO, ILLINOIS 60641

CHICAGO DEPARTMENT OF TRANSPORTATION
DIVISION OF ENGINEERING

STATE / LAKE LOOP ELEVATED STATION
200 NORTH STATE STREET, CHICAGO, IL 60601

DIAGRAMS - HEAT TRACE PANEL WIRING PART 2

CDOT PROJECT D-1-209

DATE: 9/9/2022

SPEC. NO.

DRAWING NO. E-624

REVISION NO.

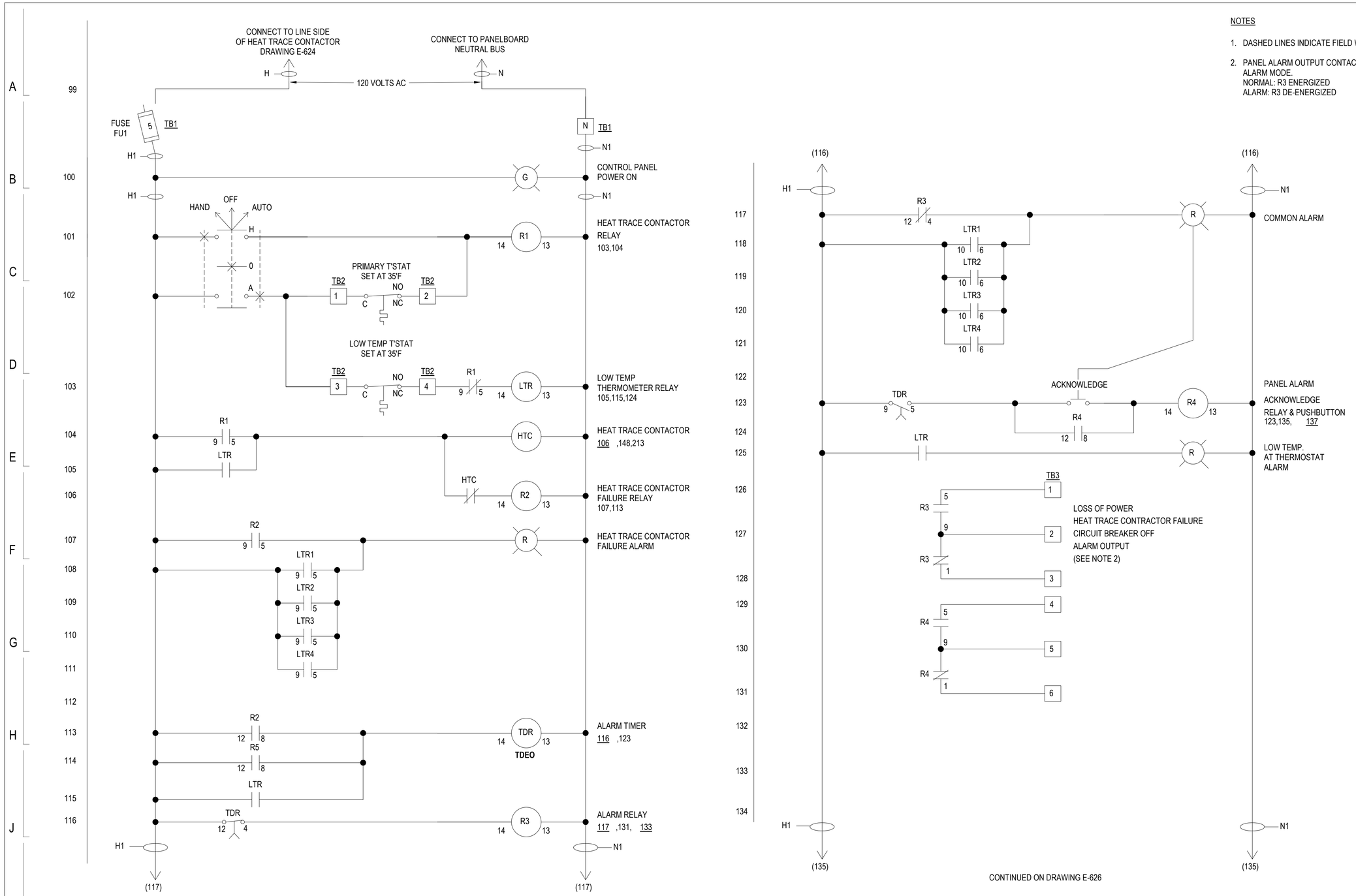

NOTES

1. DASHED LINES INDICATE FIELD WIRING
2. PANEL ALARM OUTPUT CONTACTS SHOWN IN ALARM MODE.
   NORMAL: R3 ENERGIZED
   ALARM: R3 DE-ENERGIZED

CONTINUED ON DRAWING E-626

NO.	DATE	REVISIONS	DES.	DRW.	CHK.	DCCO	CDOT
4	7/3/2023	ISSUED FOR BID	JM	EM	OS		

DESIGN BY:
DRAWN BY:
CHECKED BY:
APPROVED BY:
CDOT/APPROVED BY:

TRANSYSTEMS
222 SOUTH RIVERSIDE PLAZA SUITE 610
CHICAGO, ILLINOIS 60606

SKIDMORE, OWINGS & MERRILL LLP
224 SOUTH MICHIGAN AVENUE, SUITE 1000
CHICAGO, ILLINOIS 60604

FACET ENGINEERING
4316 NORTH ELSTON AVENUE
CHICAGO, ILLINOIS 60641

CHICAGO DEPARTMENT OF TRANSPORTATION
DIVISION OF ENGINEERING

STATE / LAKE LOOP ELEVATED STATION
200 NORTH STATE STREET, CHICAGO, IL 60601

DIAGRAMS - HEAT TRACE PANEL WIRING PART 3

CDOT PROJECT D-1-209

DATE: 9/9/2022

SPEC. NO.

DRAWING NO. E-625

REVISION NO.

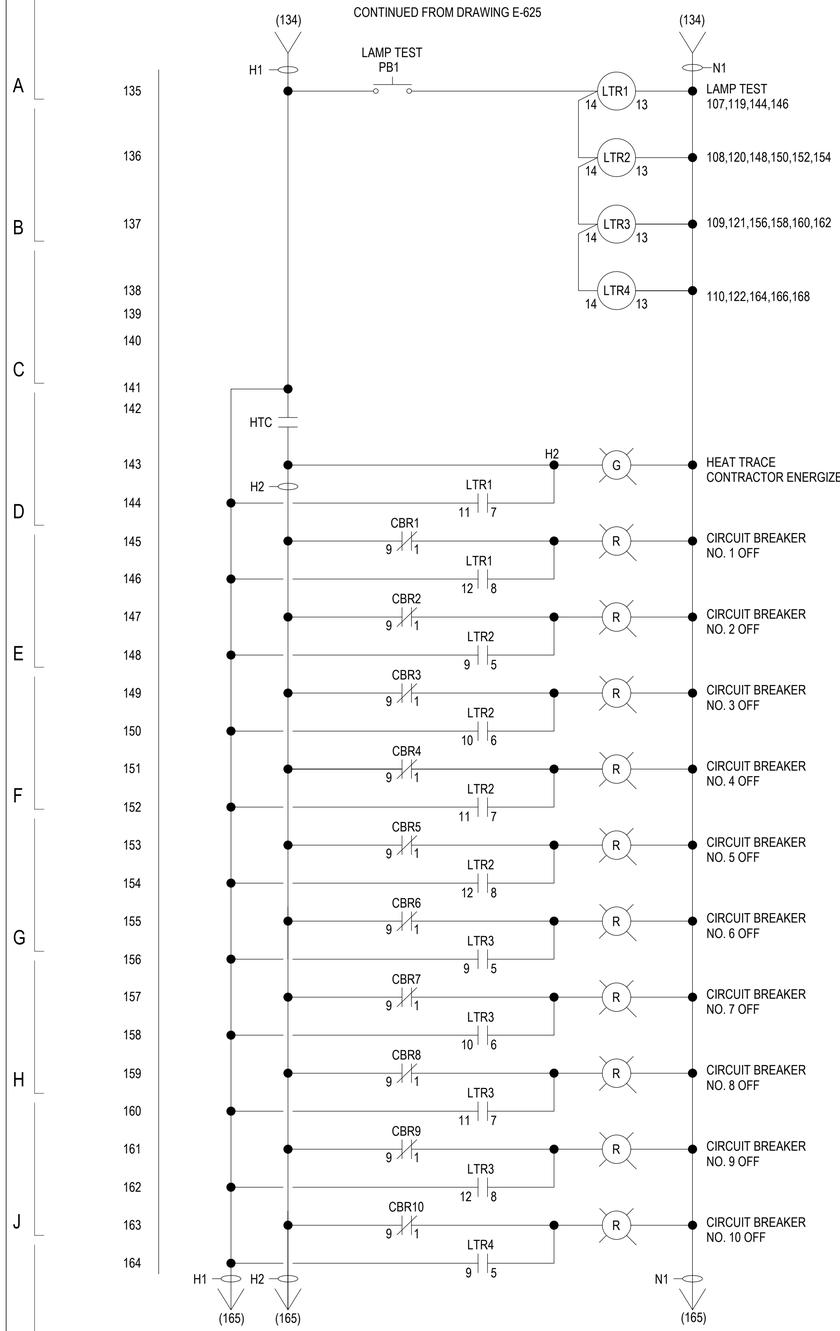

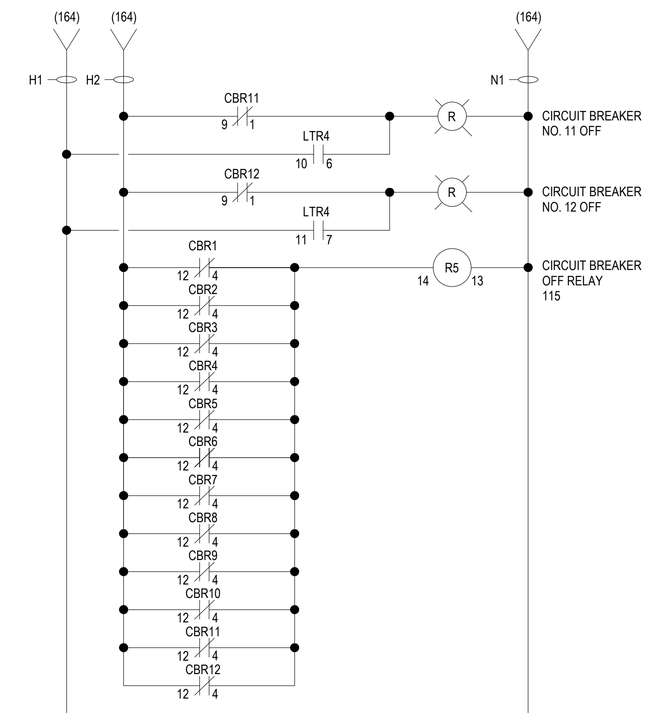

NOTES

1. DASHED LINES INDICATE FIELD WIRING
2. PANEL ALARM OUTPUT CONTACTS SHOWN IN ALARM MODE.
   NORMAL: R3 ENERGIZED
   ALARM: R3 DE-ENERGIZED

DESIGN BY:										
DRAWN BY:										
CHECKED BY:										
APPROVED BY:		4	7/3/2023	ISSUED FOR BID	JM	EM	OS			
CDOT/APPROVED BY:		NO.	DATE	REVISIONS	DES.	DRW.	CHK.	DCCO	CDOT	

TRANSYSTEMS
222 SOUTH RIVERSIDE PLAZA SUITE 610
CHICAGO, ILLINOIS 60606

SKIDMORE, OWINGS & MERRILL LLP
224 SOUTH MICHIGAN AVENUE, SUITE 1000
CHICAGO, ILLINOIS 60604

FACET ENGINEERING
4316 NORTH ELSTON AVENUE
CHICAGO, ILLINOIS 60641

CHICAGO DEPARTMENT OF TRANSPORTATION
DIVISION OF ENGINEERING

STATE / LAKE LOOP ELEVATED STATION
200 NORTH STATE STREET, CHICAGO, IL 60601

SPEC. NO.

DIAGRAMS - HEAT TRACE PANEL WIRING PART 4

DRAWING NO.
E-626

CDOT PROJECT D-1-209

DATE: 9/9/2022

REVISION NO.

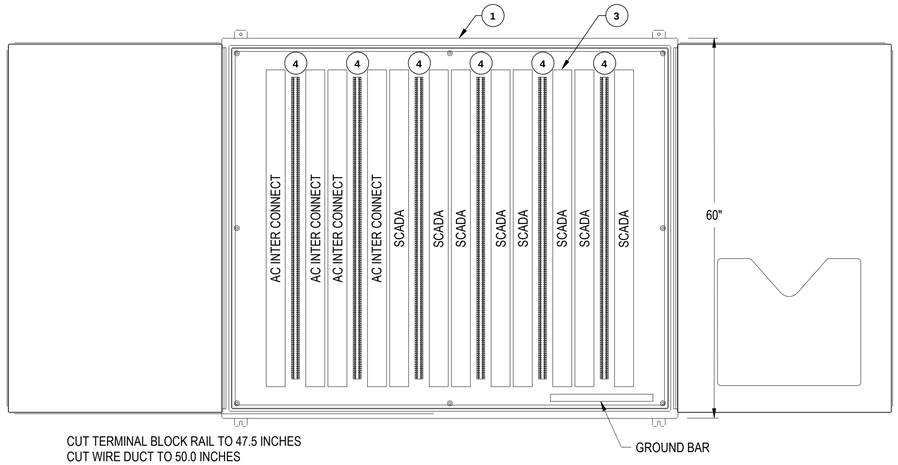

OPEN VIEW

TOP VIEW

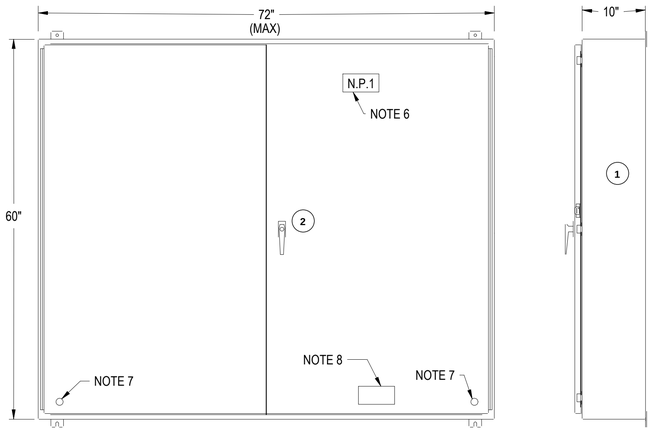

FRONT VIEW

SIDE VIEW

NOTES:

1. ENCLOSURE SIMILAR TO HOFFMAN BULLETIN A12 EXCEPT MADE FROM 12 GAUGE GALVANEAL STEEL CONTINUOUSLY WELDED SEAMS, PRIMED AND FINISHED ANSI-61 WITH 12 GAUGE BACK SUB PANEL PAINTED WHITE. PROVIDE TWO DOORS FOR PANELS WIDER THAN 36"
2. SUB PANEL MOUNTED WITH VIBRATION DAMPERS.
3. WIRE DUCT COVERS PROVIDED WITH USE IDENTIFICATION LABELS.
4. ASSEMBLY TO BEAR UL INDUSTRIAL CONTROL LABEL.
5. ALL CONTROL WIRING TO BE #14 AWG TYPE SIS, 19 STRAND, COPPER, 600 VOLTS ASSEMBLY TO BEAR UL 508 INDUSTRIAL CONTROL LABEL. ALL INTERNAL CONNECTIONS TO BE MADE WITH PANDUIT INSULATED RING TYPE LUGS WHEN POSSIBLE.
6. 2 X 6 WHITE WITH BLACK 3/8" LETTERS STAINLESS STEEL SCREW ATTACHED "INTERFACE TERMINAL CABINET ITS-WAB".
7. DOOR GROUND STUD.
8. MULTIPLE SOURCE LABEL.
9. DOORS TO BE GASKETED AND PROVIDED WITH CONTINUOUS STAINLESS STEEL HINGE. PROVIDE DOCUMENT HOLDER ON INSIDE FACE OF DOOR.

LEGEND	
ITEM NO.	**DESCRIPTION**
1	SEE NOTES 1,2,4,9
2	3 POINT LEVER HANDLE LOCK KEYED CAT 60
3	WHITE NYLON WIRE DUCT 3 X 3 WITH COVER (NOTE 3)
4	3 POINT 30AMPERE 600VOLT SCREW TYPE TERMINAL BLOCKS

1 INTERFACE TERMINAL CABINET (ITC)

NTS

DESIGN BY:										
DRAWN BY:										
CHECKED BY:										
APPROVED BY:		4	7/3/2023	ISSUED FOR BID	JM	EM	OS			
CDOT/APPROVED BY:		NO.	DATE	REVISIONS	DES.	DRW.	CHK.	DCCO	CDOT	

TRANSYSTEMS
222 SOUTH RIVERSIDE PLAZA SUITE 610
CHICAGO, ILLINOIS 60606

SKIDMORE, OWINGS & MERRILL LLP
224 SOUTH MICHIGAN AVENUE, SUITE 1000
CHICAGO, ILLINOIS 60604

FACET ENGINEERING
4316 NORTH ELSTON AVENUE
CHICAGO, ILLINOIS 60641

CHICAGO DEPARTMENT OF TRANSPORTATION
DIVISION OF ENGINEERING

STATE / LAKE LOOP ELEVATED STATION
200 NORTH STATE STREET, CHICAGO, IL 60601

DIAGRAMS - ITC CABINET LAYOUT

CDOT PROJECT D-1-209

DATE: 9/9/2022

SPEC. NO.

DRAWING NO. E-627

REVISION NO.

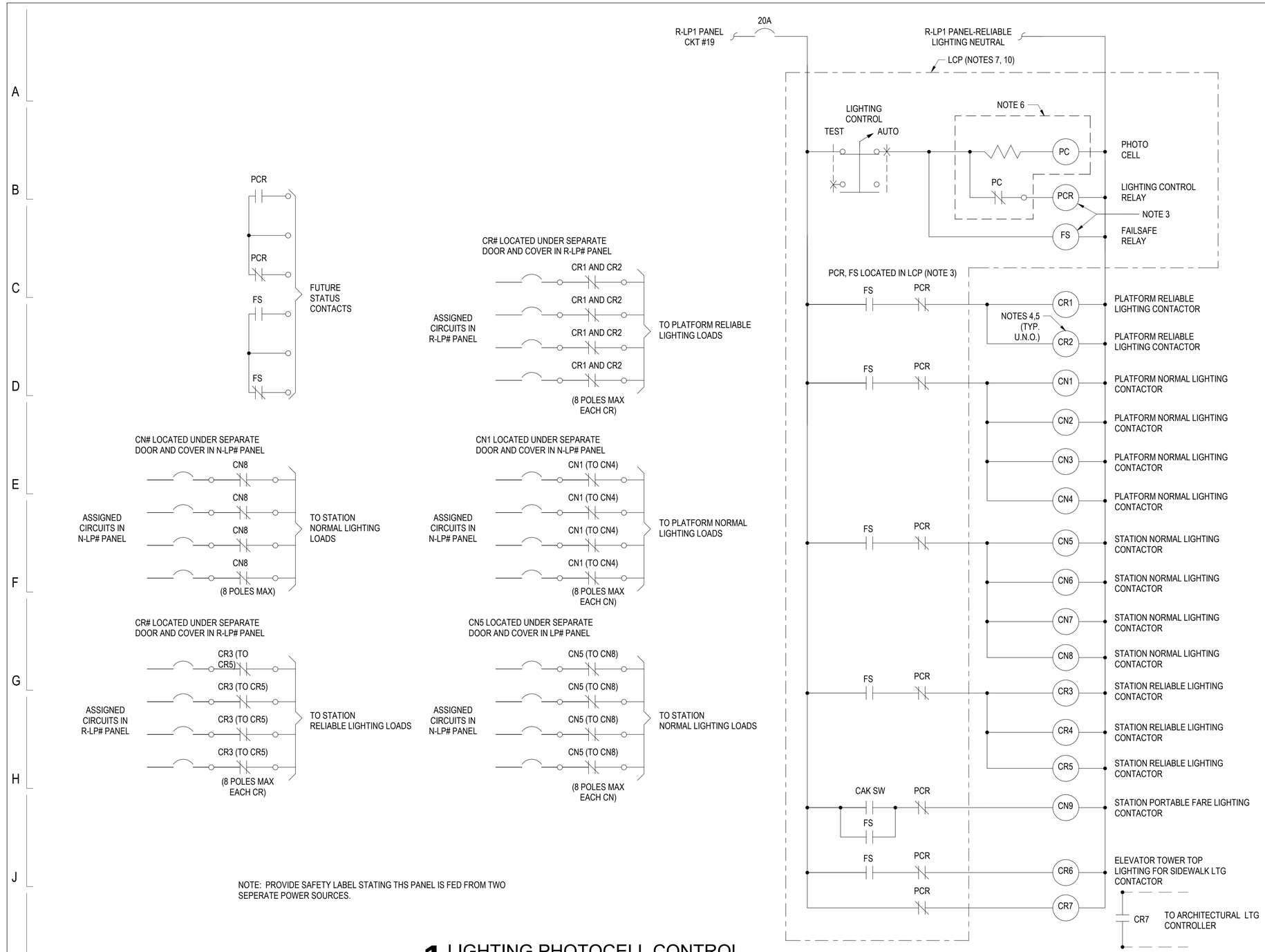

1 LIGHTING PHOTOCELL CONTROL
NTS

NOTES:

1. SEE DRAWING E-001 FOR ELECTRICAL SYMBOL LIST.
2. SEE DRAWING E-002 FOR ELECTRICAL GENERAL NOTES AND ABBREVIATIONS.
3. PCR, FS TO BE POTTER BRUMFIELD KRPA 14AN120, SOCKET AND HOLD DOWN SPRING.
4. CN, CR, CE TO BE SQUARE D ELECTRICAL HELD 30 AMP TYPE LO WITH NORMALLY CLOSED CONTACTS. COIL BURDEN TO BE 180VA IN RUSH AND 35VA HOLD.
5. LIGHTING CONTACTORS DE-ENERGIZED TO TURN LIGHTS ON IN NORMAL OPERATION OR PHOTOCELL FAILURE OR TEST.
6. LOCATED ON ROOF. PROVIDE 3/4" CONDUIT FROM LIGHTING PANEL TO PHOTO CELL.
7. LCP IS LOCATED IN MAIN ELECTRICAL ROOM.
8. THIS IS A STANDARD DRAWING. PROVIDE ADDITIONAL CONTACTORS AS NEEDED FOR CIRCUITED LIGHTING AND AN ADDITIONAL 25 PERCENT SPARE CONTACTS. PROVIDE LARGER PANEL ENCLOSURE AS NEEDED FOR CONTACTORS AND WIRING.
9. PROVIDE SAFETY LABEL STATING THS PANEL IS FED FROM TWO SEPERATE POWER SOURCES.
10. REFER TO E-600 SERIES DRAWINGS FOR PANEL SCHEDULES.

DESIGN BY:										
DRAWN BY:										
CHECKED BY:										
APPROVED BY:		4	7/3/2023	ISSUED FOR BID	JM	EM	OS			
CDOT/APPROVED BY:		NO.	DATE	REVISIONS	DES.	DRW.	CHK.	DCCO	CDOT	

TRANSYSTEMS
222 SOUTH RIVERSIDE PLAZA SUITE 610
CHICAGO, ILLINOIS 60606

SKIDMORE, OWINGS & MERRILL LLP
224 SOUTH MICHIGAN AVENUE, SUITE 1000
CHICAGO, ILLINOIS 60604

FACET ENGINEERING
4316 NORTH ELSTON AVENUE
CHICAGO, ILLINOIS 60641

CHICAGO DEPARTMENT
OF TRANSPORTATION
DIVISION OF ENGINEERING

STATE / LAKE LOOP ELEVATED STATION
200 NORTH STATE STREET, CHICAGO, IL 60601

DIAGRAMS - LIGHTING CONTROL PANEL WIRING

CDOT PROJECT D-1-209

DATE: 9/9/2022

SPEC. NO.

DRAWING NO.
E-628

REVISION NO.

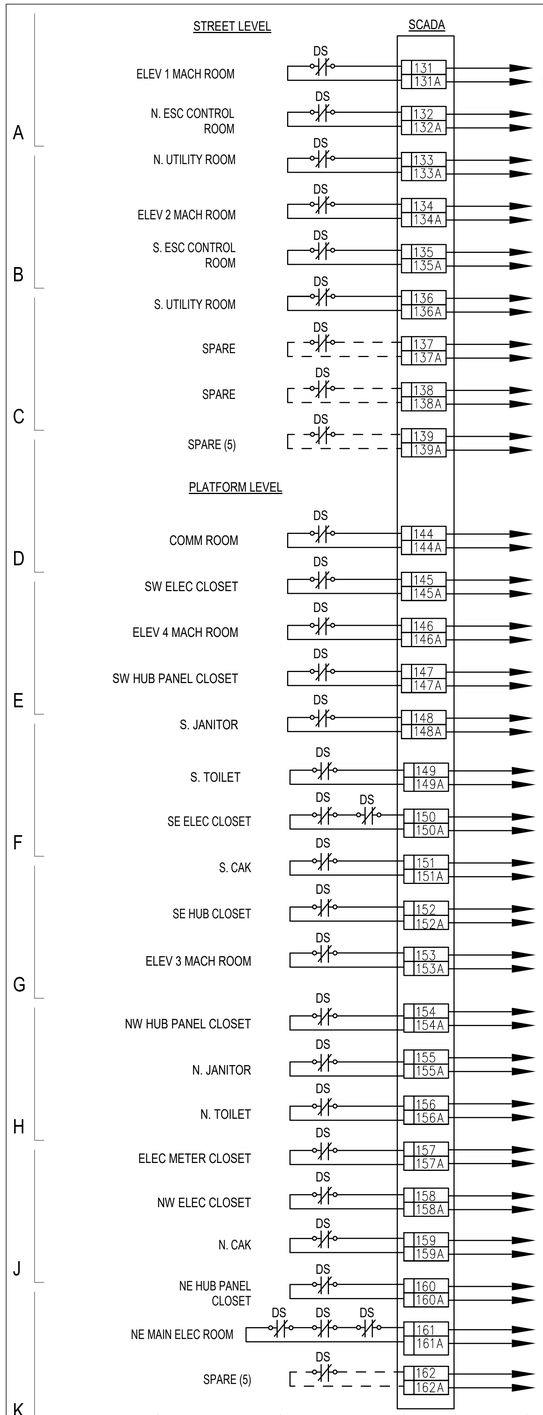

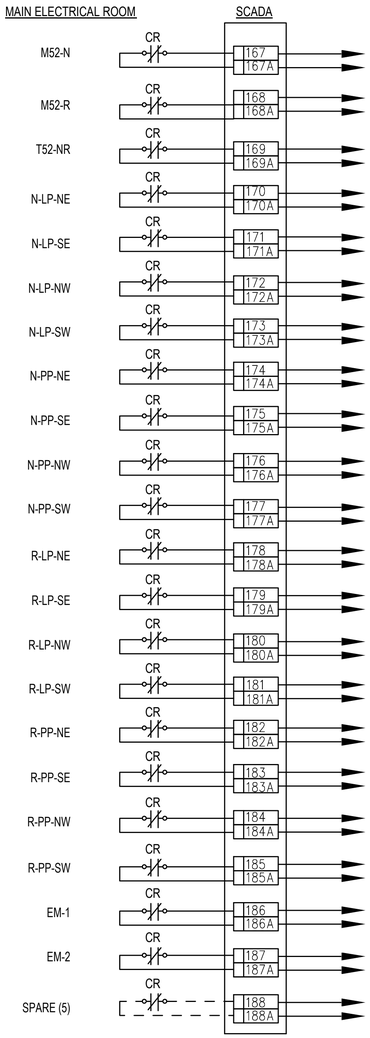

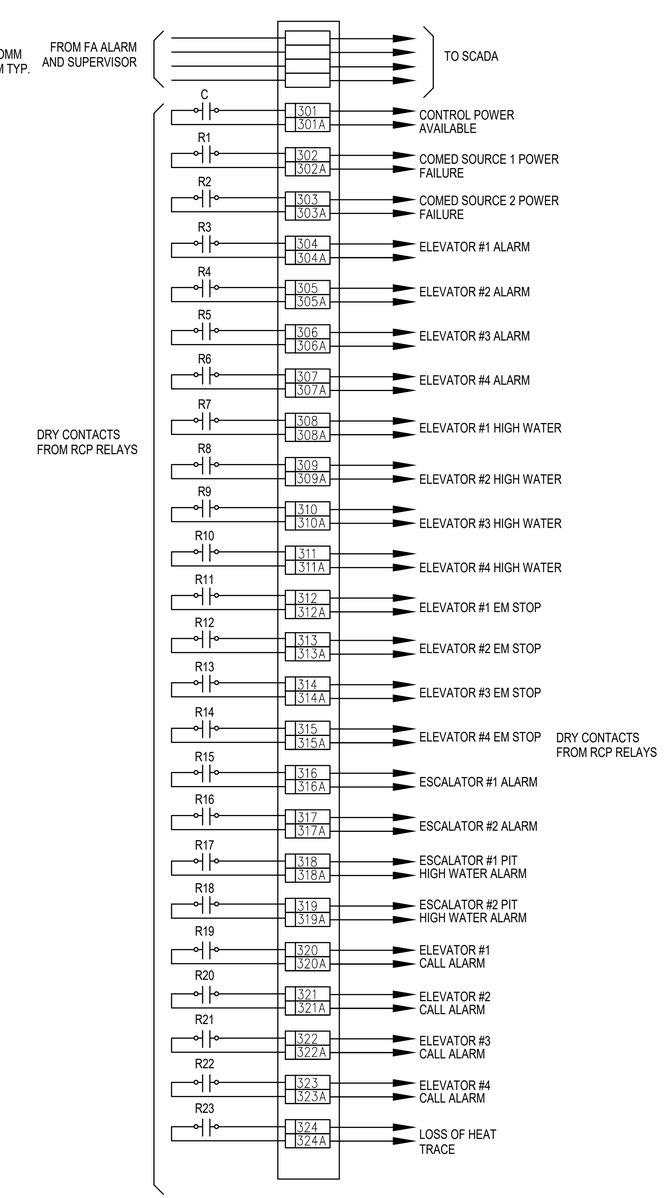

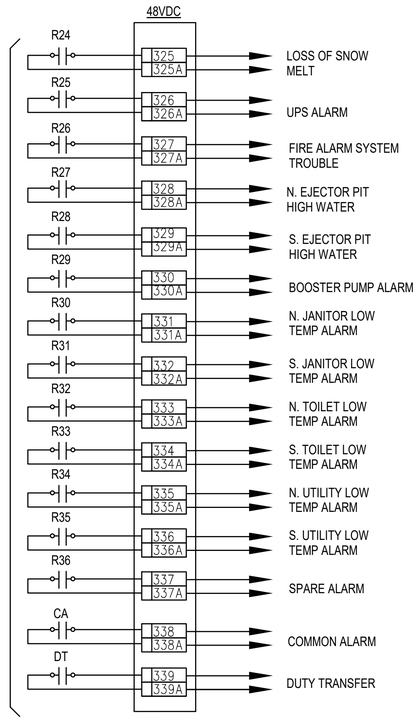

NOTES:

1. SEE DRAWING E-001 FOR ELECTRICAL SYMBOL LIST.
2. SEE DRAWING E-002 FOR ELECTRICAL GENERAL NOTES AND ABBREVIATIONS.
3. ALL RELAYS, TERMINAL STRIPS, WIRING, AND WIREWAYS ARE TO BE PROVIDED.
4. THE CABINET IS TO BE SHEET STEEL WITH MINIMUM DIMENSIONS OF 36" WIDE BY 48" HIGH BY 6" DEEP, NEMA 12 CONSTRUCTION, HINGED DOOR WITH LATCH, EQUAL TO HOFFMAN.
5. ALL CONDUCTORS TO BE #14, SIS, 600V WIRE.
6. ALL RELAYS SHALL BE 3 POLE, DOUBLE THROW WITH PILOT LIGHT, FROM CONTACTS, 10 AMPERES, COIL VOLTAGE 120V, 60HZ, SQUARE D CLASS 8501 TYPE KP13P14 OR APPROVED EQUAL.
7. ALL SOCKETS SHALL BE FOR USE WITH THE ABOVE RELAYS, 11 PIN TUBULAR, DOUBLE TIER SQUARE D, CLASS 8501 NR62 OR APPROVED EQUAL SOCKETS TO BE MOUNTED ON MOUNTING TRACK.
8. REFER TO DRAWINGS E-627, E-628 AND E-629 FOR ADDITIONAL WORK.

INTERFACE TERMINAL CABINET "ITC" WIRING DIAGRAM

NOTE 8

DESIGN BY:										
DRAWN BY:										
CHECKED BY:										
APPROVED BY:		4	7/3/2023	ISSUED FOR BID	EM	EM	OS			
CDOT/APPROVED BY:		NO.	DATE	REVISIONS	DES.	DRW.	CHK.	DCCO	CDOT	

TRANSYSTEMS
222 SOUTH RIVERSIDE PLAZA SUITE 610
CHICAGO, ILLINOIS 60606

SKIDMORE, OWINGS & MERRILL LLP
224 SOUTH MICHIGAN AVENUE, SUITE 1000
CHICAGO, ILLINOIS 60604

FACET ENGINEERING
DBE/MBE CERTIFIED
Mechanical • Electrical • Communications • SCADA • Traction Power
Performance • Respect • Initiation • Dedication • Experience
FACET ENGINEERING
4316 NORTH ELSTON AVENUE
CHICAGO, ILLINOIS 60641

CHICAGO DEPARTMENT OF TRANSPORTATION
DIVISION OF ENGINEERING

STATE / LAKE LOOP ELEVATED STATION
200 NORTH STATE STREET, CHICAGO, IL 60601

DIAGRAMS - ITC WIRING

SPEC. NO.

DRAWING NO.
E-629

CDOT PROJECT D-1-209

DATE: 9/9/2022

REVISION NO.

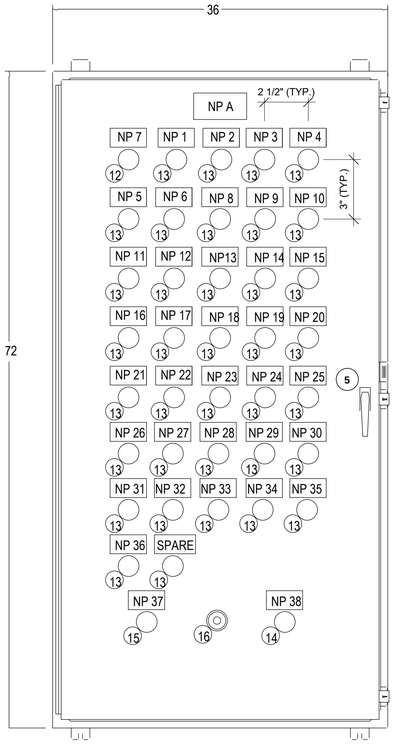

FRONT VIEW

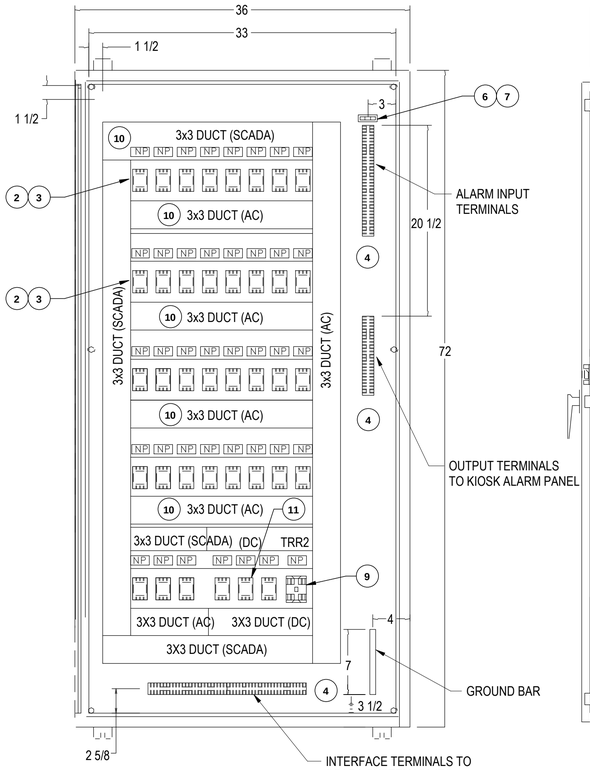

INSIDE VIEW

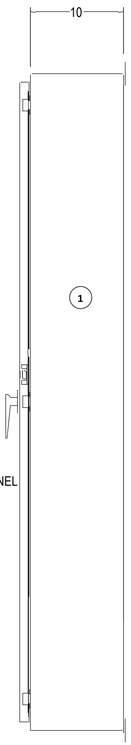

SIDE VIEW

TOP VIEW

BILL OF MATERIAL

ITEM NO.	QTY.	MANUFACTURER	CATALOG NUMBER	DESCRIPTION
1	1	HOFFMAN	A-63610LP A-60P36	NEMA 12 ENCLOSURE 72" X 36" X 10" BACKPAN
2	39	POTTER-BRUMFIELD	KRPA-14AN-120	3PDT RELAY 120VOLT WITH NEON INDICATOR
3	39	SQUARE D	8501-NR61	11 PIN SOCKET DIN RAIL MOUNT
4	75	USD	NSS3	3 POINT 30AMP 600 VOLT SCREW TYPE TERMINAL BLOCK
5	1	CORBIN	1000	3 POINT LEVER HANDLE LOCK KEYED CAT 60
6	2	BUSSMAN	FNQR-10	FUSE 10 AMP TIME DELAY
7	2	BUSSMAN	BC-6031SQ	FUSE BLOCK MIDGET CLASS CC
8	1	ALLEN-BRADLEY	700PK400A1	CONTROL RELAY 4 POLE TYPE PK 20 AMP MASTER CONTACT 120 VOLT COIL
9	1	ALLEN-BRADLEY	700PKLL11A1	TYPE PK RELAY MECHANICAL LATCH ATTACHMENT 20 AMP CONTACT 120 AC COIL
10	AS REQ'D	PANDUIT	G3X3WH6 C3WH6	WHITE NYLON WIRE DUCT 3 X 3 WITH COVER
11	3	SQUARE D	RUMC3AB2ED	3PDT 48 VOLT DC RELAY
12	1	CUTLER HAMMER	10250T221LRP06	TRANSFORMER TYPE 120-6 VOLT PUSH TO TEST INDICATING LIGHT WITH GREEN LENS AND GREEN LED
13	29	CUTLER HAMMER	10250T221LRP06	TRANSFORMER TYPE 120-6 VOLT PUSH TO TEST INDICATING LIGHT WITH RED LENS AND RED LED
14	1	CUTLER HAMMER	10250T101, 10250T53	BLACK PUSHBUTTON OPERATOR 1 N.C. CONTACT BLOCK
15	1	CUTLER HAMMER	10250T101, 10250T51	BLACK PUSHBUTTON OPERATOR 1 N.O. CONTACT BLOCK
16	1	MALLORY	SC11ON	SONALERT ALARM BUZZER CONTINUOUS TONE 120V AC 80dB

ALL CONTROL WIRING AWG #14 TYPE SIS, 19 STRAND, COPPER, 600 VOLTS
ASSEMBLY TO BEAR UL 508 INDUSTRIAL CONTROL LABEL.
ALL INTERNAL CONNECTIONS TO BE MADE WITH PANDUIT INSULATED RING TONGUE LUGS WHEN POSSIBLE.
CONNECTIONS TO RELAY SOCKETS MADE WITH PANDUIT INSULATED LOCKING FORK LUGS.

NAMEPLATES

NAME PLATE	ENGRAVING	
NP A	LINE 1	STATION RELAY ALARM
	LINE 2	CONTROL PANEL RCP
NP 1	LINE 1	SOURCE 1 SERVICE
	LINE 2	POWER FAILURE
NP 2	LINE 1	SOURCE 2 SERVICE
	LINE 2	POWER FAILURE
NP 3	LINE 1	TERMINAL
	LINE 2	ON EM GENERATOR
NP 4	LINE 1	CONTROL POWER
	LINE 2	POWER FAILURE
NP 5	LINE 1	ELEVATOR #1
	LINE 2	ALARM
NP 6	LINE 1	ELEVATOR #2
	LINE 2	ALARM
NP 7	LINE 1	ELEVATOR #3
	LINE 2	ALARM
NP 8	LINE 1	ELEVATOR #4
	LINE 2	ALARM
NP 9	LINE 1	ELEVATOR #1
	LINE 2	EMERGENCY STOP
NP 10	LINE 1	ELEVATOR #2
	LINE 2	EMERGENCY STOP
NP 11	LINE 1	ELEVATOR #3
	LINE 2	EMERGENCY STOP
NP 12	LINE 1	ELEVATOR #4
	LINE 2	EMERGENCY STOP
NP 13	LINE 1	ELEVATOR #1 PIT
	LINE 2	HIGH WATER
NP 14	LINE 1	ELEVATOR #2 PIT
	LINE 2	HIGH WATER
NP 15	LINE 1	ELEVATOR #3 PIT
	LINE 2	HIGH WATER
NP 16	LINE 1	ELEVATOR #4 PIT
	LINE 2	HIGH WATER
NP 17	LINE 1	ELEVATOR #1
	LINE 2	CALL BUTTON
NP 18	LINE 1	ELEVATOR #2
	LINE 2	CALL BUTTON
NP 19	LINE 1	ELEVATOR #3
	LINE 2	CALL BUTTON
NP 20	LINE 1	ELEVATOR #4
	LINE 2	CALL BUTTON
NP 21	LINE 1	ESCALATOR #1
	LINE 2	ALARM
NP 22	LINE 1	ESCALATOR #2
	LINE 2	ALARM
NP 23	LINE 1	ESCALATOR #1
	LINE 2	HIGH WATER
NP 24	LINE 1	ESCALATOR #2
	LINE 2	HIGH WATER
NP 25	LINE 1	LOSS OF HEAT/
	LINE 2	SNOW MELT
NP 26	LINE 1	UPS ALARM
	LINE 2	-
NP 27	LINE 1	FIRE ALARM
	LINE 2	SYSTEM TROUBLE
NP 28	LINE 1	N. EJECTOR PIT
	LINE 2	HIGH WATER
NP 29	LINE 1	S. EJECTOR PIT
	LINE 2	HIGH WATER
NP 30	LINE 1	BOOSTER PUMP
	LINE 2	ALARM
NP 31	LINE 1	N. JANITOR RM LOW
	LINE 2	TEMP ALARM
NP 32	LINE 1	S. JANITOR RM LOW
	LINE 2	TEMP ALARM
NP 33	LINE 1	N. TOILET RM LOW
	LINE 2	TEMP ALARM

NOTES:

1. SEE DRAWING E-001 FOR ELECTRICAL SYMBOL LIST.
2. SEE DRAWING E-002 FOR ELECTRICAL GENERAL NOTES AND ABBREVIATIONS.
3. PANEL MOUNTED WITH VIBRATION DAMPERS.
4. ALL RELAYS PROVIDED WITH RETAINING CLIPS.
5. WIRE DUCT COVERS PROVIDED WITH USE IDENTIFICATION LABELS.
6. ALL CONTROL WIRING AWG #14 TYPE SIS, 19 STRAND, COPPER, 600 VOLTS ASSEMBLY TO BEAR UL 508 INDUSTRIAL CONTROL LABEL.
7. ALL INTERNAL CONNECTIONS TO BE MADE WITH PANDUIT INSULATED RING TONGUE LUGS WHEN POSSIBLE.
8. CONNECTIONS TO RELAY SOCKETS MADE WITH PANDUIT INSULATED LOCKING FORK LUGS.

NAMEPLATES CONT.

NAME PLATE	ENGRAVING	
NP 34	LINE 1	S. TOILET RM LOW
	LINE 2	TEMP ALARM
NP 35	LINE 1	N. UTILITY RM LOW
	LINE 2	TEMP ALARM
NP 36	LINE 1	S. UTILITY RM LOW
	LINE 2	TEMP ALARM
NP 37	LINE 1	COMMON
	LINE 2	ALARM
NP 38	LINE 1	DUTY
	LINE 2	TRANSFER

NAMEPLATES 1" X 2-1/2" WHITE WITH BLACK 1/8" LETTERS
ATTACHED WITH STAINLESS STEEL HARDWARE
NAMEPLATES SHOWN AS - ARE BLANK
NAMEPLATES 18,19,20 - ARE INSIDE ADJACENT TO RELAIS

DESIGN BY:									
DRAWN BY:									
CHECKED BY:									
APPROVED BY:		4	7/3/2023	ISSUED FOR BID	JM	EM	OS		
CDOT/APPROVED BY:		NO.	DATE	REVISIONS	DES.	DRW.	CHK.	DCCO	CDOT

TRANSYSTEMS
222 SOUTH RIVERSIDE PLAZA SUITE 610
CHICAGO, ILLINOIS 60606

SKIDMORE, OWINGS & MERRILL LLP
224 SOUTH MICHIGAN AVENUE, SUITE 1000
CHICAGO, ILLINOIS 60604

FACET ENGINEERING
4316 NORTH ELSTON AVENUE
CHICAGO, ILLINOIS 60641

CHICAGO DEPARTMENT OF TRANSPORTATION
DIVISION OF ENGINEERING

STATE / LAKE LOOP ELEVATED STATION
200 NORTH STATE STREET, CHICAGO, IL 60601

SPEC. NO.

DIAGRAMS - RELAY CONTROL PANEL DETAILS

DRAWING NO. E-630

CDOT PROJECT D-1-209 | DATE: 9/9/2022 | REVISION NO.

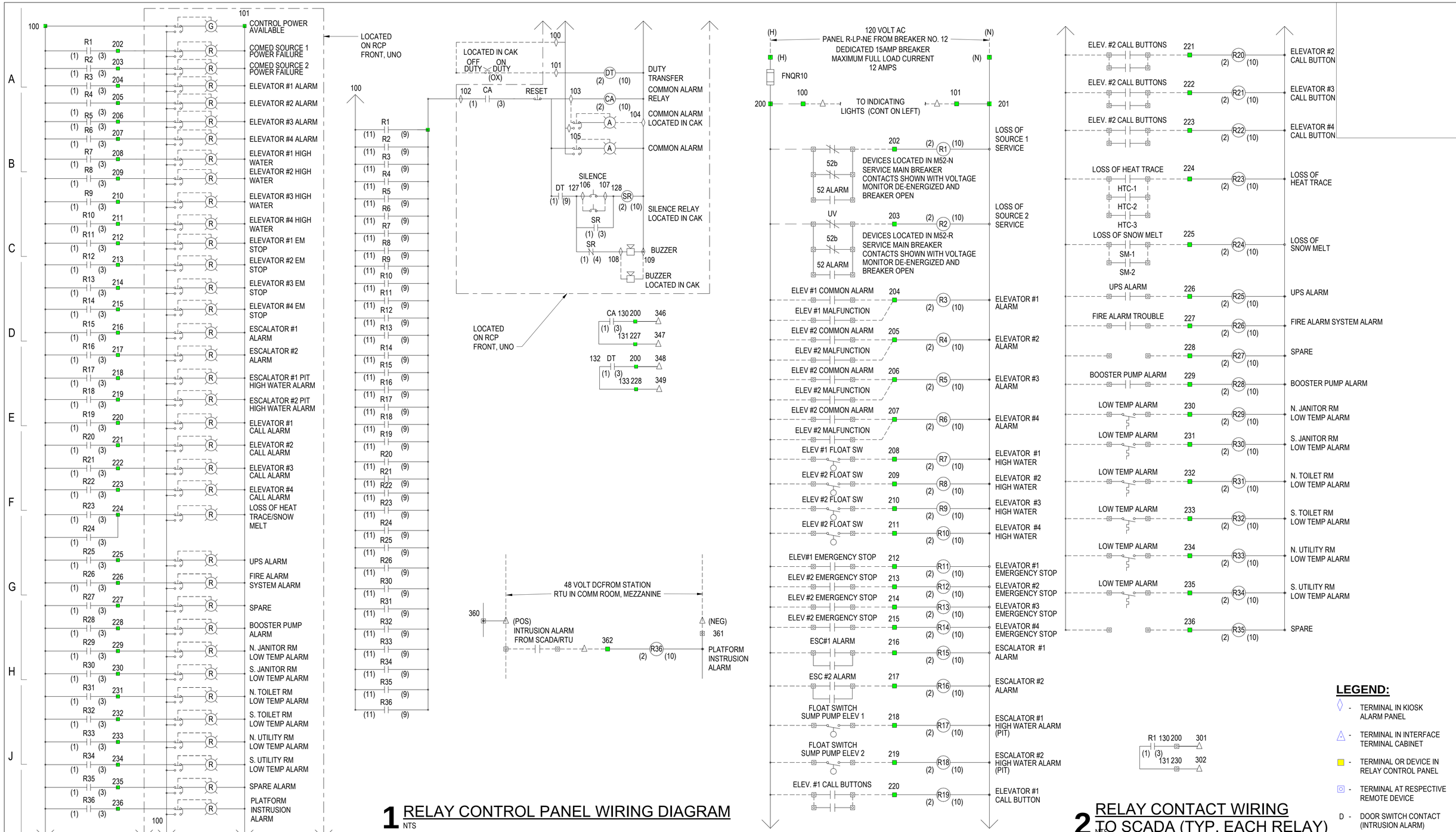

1 RELAY CONTROL PANEL WIRING DIAGRAM
NTS

2 RELAY CONTACT WIRING TO SCADA (TYP. EACH RELAY)
NTS

LEGEND:

- ◇ - TERMINAL IN KIOSK ALARM PANEL
- △ - TERMINAL IN INTERFACE TERMINAL CABINET
- ■ - TERMINAL OR DEVICE IN RELAY CONTROL PANEL
- ▣ - TERMINAL AT RESPECTIVE REMOTE DEVICE
- D - DOOR SWITCH CONTACT (INTRUSION ALARM)

DESIGN BY:									
DRAWN BY:									
CHECKED BY:									
APPROVED BY:		4	7/3/2023	ISSUED FOR BID	JM	EM	OS		
CDOT/APPROVED BY:		NO.	DATE	REVISIONS	DES.	DRW.	CHK.	DCCO	CDOT

TRANSYSTEMS
222 SOUTH RIVERSIDE PLAZA SUITE 610
CHICAGO, ILLINOIS 60606

SKIDMORE, OWINGS & MERRILL LLP
224 SOUTH MICHIGAN AVENUE, SUITE 1000
CHICAGO, ILLINOIS 60604

FACET ENGINEERING
DBE/MBE CERTIFIED
Performance • Respect • Initiation • Dedication • Experience
FACET ENGINEERING
4316 NORTH ELSTON AVENUE
CHICAGO, ILLINOIS 60641

CHICAGO DEPARTMENT OF TRANSPORTATION
DIVISION OF ENGINEERING

STATE / LAKE LOOP ELEVATED STATION
200 NORTH STATE STREET, CHICAGO, IL 60601

SPEC. NO.

DIAGRAMS - RELAY CONTROL PANEL WIRING

DRAWING NO. E-631

CDOT PROJECT D-1-209

DATE: 9/9/2022

REVISION NO.

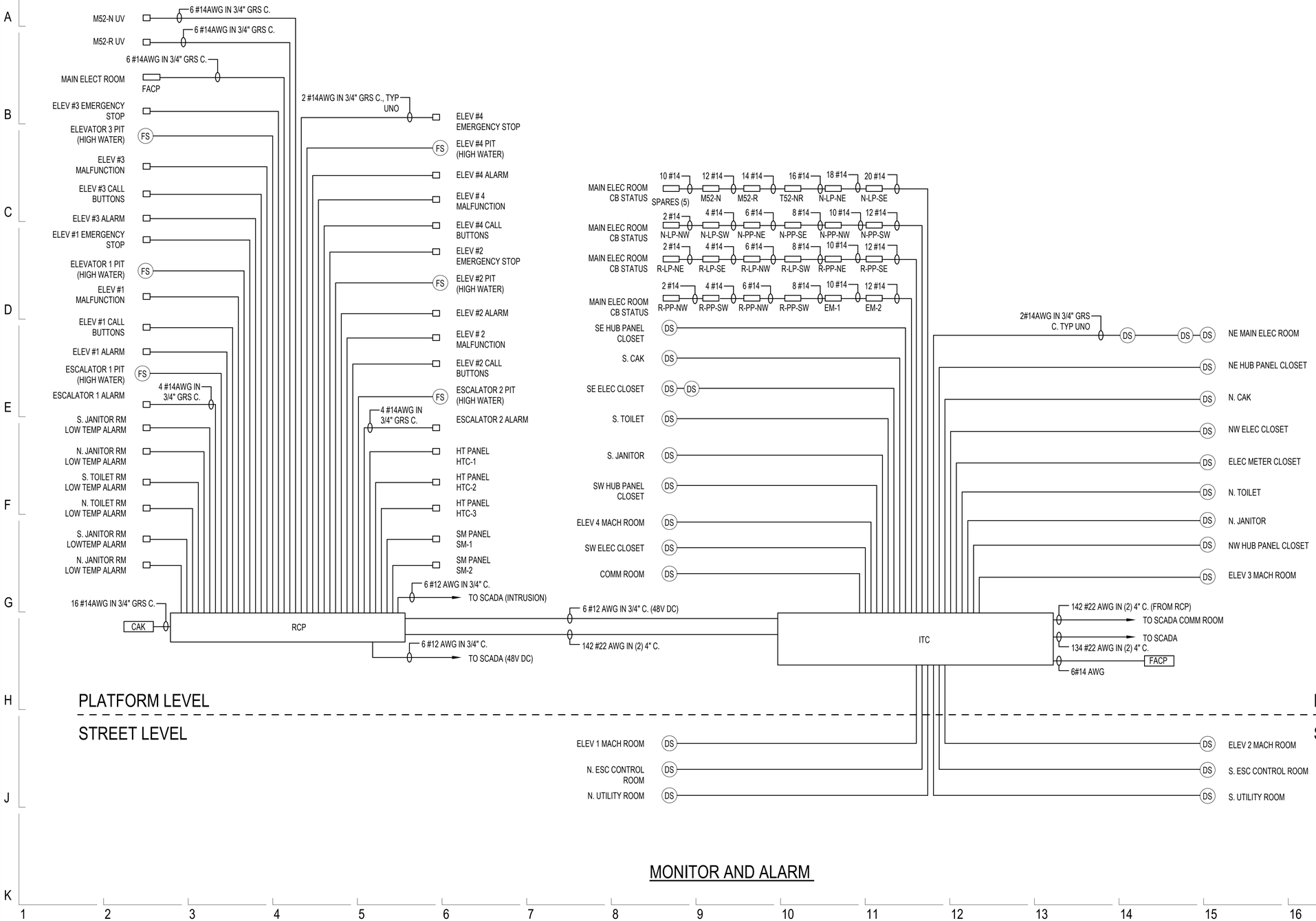

NOTES:

1. SEE DRAWING E-001 FOR ELECTRICAL SYMBOL LIST.
2. SEE DRAWING E-002 FOR ELECTRICAL GENERAL NOTES AND ABBREVIATIONS.
3. REFER TO DRAWING E-629, E-630 AND E-631 FOR ADDITIONAL REQUIREMENTS.

MONITOR AND ALARM

DESIGN BY:										
DRAWN BY:										
CHECKED BY:										
APPROVED BY:		4	7/3/2023	ISSUED FOR BID	EM	EM	OS			
CDOT/APPROVED BY:		NO.	DATE	REVISIONS	DES.	DRW.	CHK.	DCCO	CDOT	

TRANSYSTEMS
222 SOUTH RIVERSIDE PLAZA SUITE 610
CHICAGO, ILLINOIS 60606

SKIDMORE, OWINGS & MERRILL LLP
224 SOUTH MICHIGAN AVENUE, SUITE 1000
CHICAGO, ILLINOIS 60604

FACET ENGINEERING
4316 NORTH ELSTON AVENUE
CHICAGO, ILLINOIS 60641

CHICAGO DEPARTMENT OF TRANSPORTATION
DIVISION OF ENGINEERING

STATE / LAKE LOOP ELEVATED STATION
200 NORTH STATE STREET, CHICAGO, IL 60601

DIAGRAMS - MONITOR AND ALARM

CDOT PROJECT D-1-209

DATE: 9/9/2022

SPEC. NO.

DRAWING NO. E-632

REVISION NO.

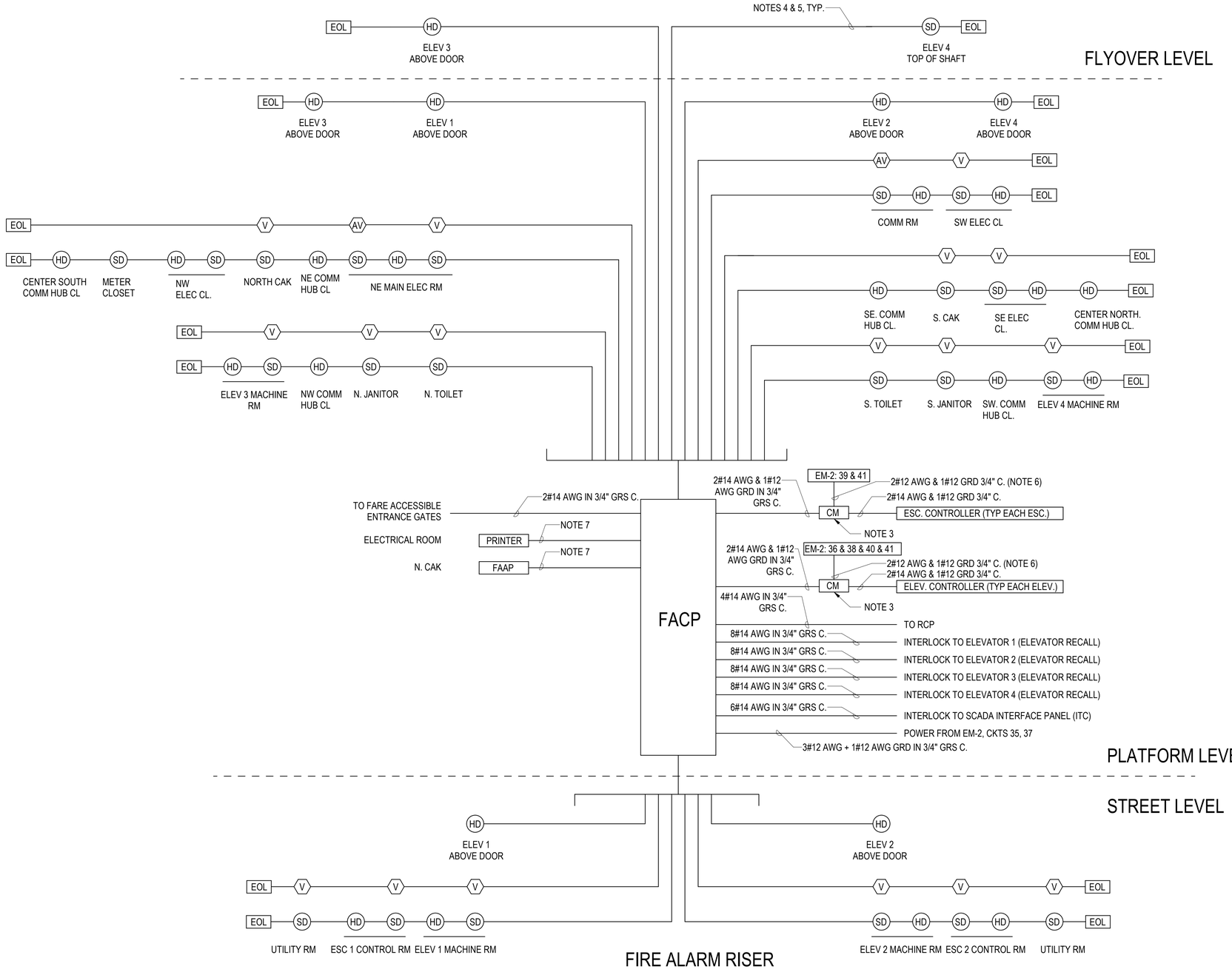

NOTES:

1. SEE DRAWING E-001 FOR ELECTRICAL SYMBOL LIST.
2. SEE DRAWING E-002 FOR ELECTRICAL GENERAL NOTES AND ABBREVIATIONS.
3. CONTROL MODULE TO INTERFACE WITH ESCALATOR EQUIPMENT. PROVIDE AS NEEDED. COORDINATE WITH ESCALATOR MANUFACTURER. REFER TO DRAWING E-901 FOR CIRCUIT NUMBERS.
4. WIRING FOR EQUIPMENT IS 2#14 AWG TYPICAL U.N.O.
5. ALL CONDUITS SHALL BE MINIMUM 3/4" GRS, U.N.O.
6. SEE PLAN DRAWINGS FOR PANEL AND CIRCUIT NUMBERS.
7. PROVIDE CABLE PER MANUFACTURER REQUIREMENTS IN MINIMUM 3/4" GRS C.
8. PROVIDE ADDITIONAL DEVICES PER BUREAU OF FIRE PREVENTION.

DESIGN BY:										
DRAWN BY:										
CHECKED BY:										
APPROVED BY:		4	7/3/2023	ISSUED FOR BID	EM	EM	OS			
CDOT/APPROVED BY:		NO.	DATE	REVISIONS	DES.	DRW.	CHK.	DCCO	CDOT	

TRANSYSTEMS
222 SOUTH RIVERSIDE PLAZA SUITE 610
CHICAGO, ILLINOIS 60606

SKIDMORE, OWINGS & MERRILL LLP
224 SOUTH MICHIGAN AVENUE, SUITE 1000
CHICAGO, ILLINOIS 60604

FACET ENGINEERING
4316 NORTH ELSTON AVENUE
CHICAGO, ILLINOIS 60641

CHICAGO DEPARTMENT
OF TRANSPORTATION
DIVISION OF ENGINEERING

STATE / LAKE LOOP ELEVATED STATION
200 NORTH STATE STREET, CHICAGO, IL 60601

SPEC. NO.

DIAGRAMS - FIRE ALARM RISER

DRAWING NO.
E-633

CDOT PROJECT D-1-209

DATE: 9/9/2022

REVISION NO.

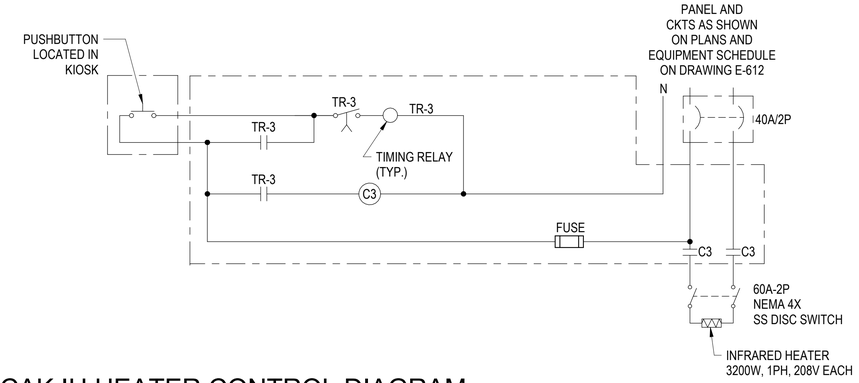

1 CAK IH HEATER CONTROL DIAGRAM
NTS

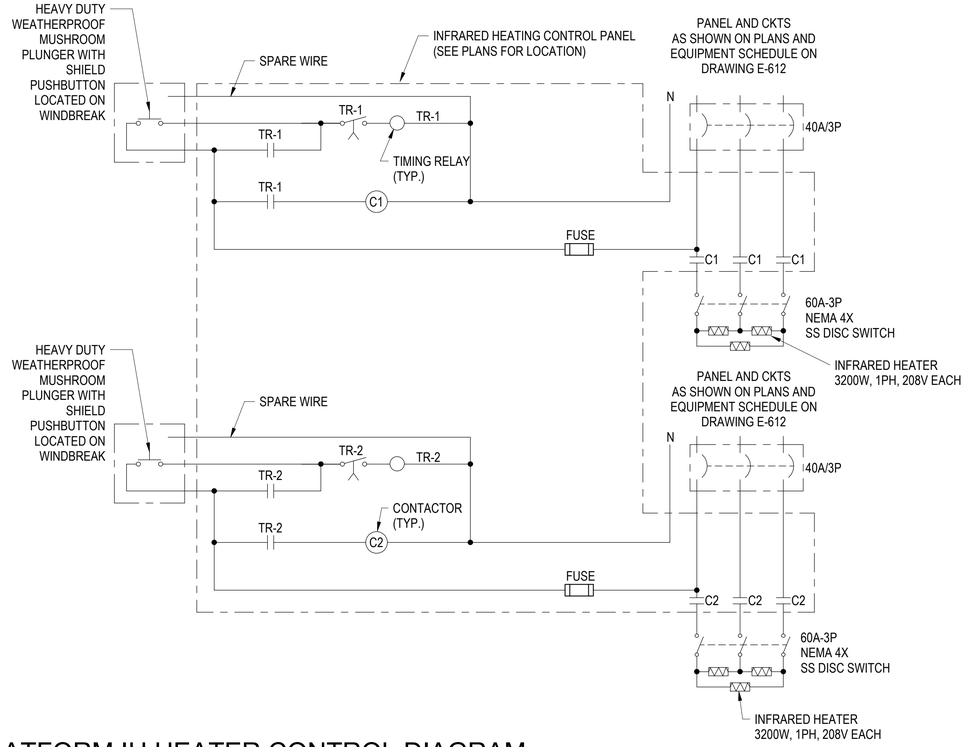

2 PLATFORM IH HEATER CONTROL DIAGRAM
NTS

NOTES:

1. SEE DRAWING E-001 FOR ELECTRICAL SYMBOL LIST.
2. SEE DRAWING E-002 FOR ELECTRICAL GENERAL NOTES AND ABBREVIATIONS.
3. COORDINATE FINAL DISCONNECT SWITCH LOCATION WITH ARCHITECTURAL DRAWINGS.
4. CONTRACTOR SHALL CONCEAL THE CONDUIT IN THE WINDBREAK TUBING.

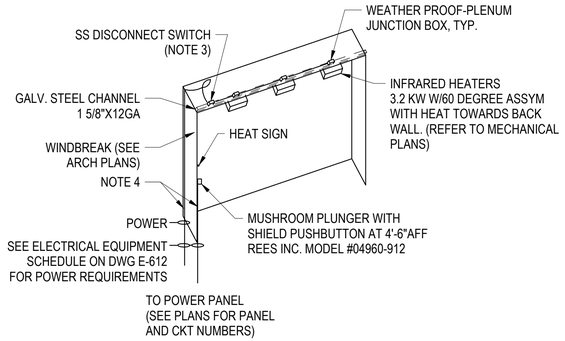

3 TYPICAL PLATFORM HEATER INSTALLATION
NTS

DESIGN BY:										
DRAWN BY:										
CHECKED BY:										
APPROVED BY:		4	7/3/2023	ISSUED FOR BID	JM	EM	OS			
CDOT/APPROVED BY:		NO.	DATE	REVISIONS	DES.	DRW.	CHK.	DCCO	CDOT	

TRANSYSTEMS
222 SOUTH RIVERSIDE PLAZA SUITE 610
CHICAGO, ILLINOIS 60606

SKIDMORE, OWINGS & MERRILL LLP
224 SOUTH MICHIGAN AVENUE, SUITE 1000
CHICAGO, ILLINOIS 60604

FACET ENGINEERING
4316 NORTH ELSTON AVENUE
CHICAGO, ILLINOIS 60641

CHICAGO DEPARTMENT OF TRANSPORTATION
DIVISION OF ENGINEERING

STATE / LAKE LOOP ELEVATED STATION
200 NORTH STATE STREET, CHICAGO, IL 60601

DIAGRAMS - INFRARED HEATER CONTROL WIRING SCHEMATICS

CDOT PROJECT D-1-209 | DATE: 9/9/2022

SPEC. NO.

DRAWING NO. E-634

REVISION NO.

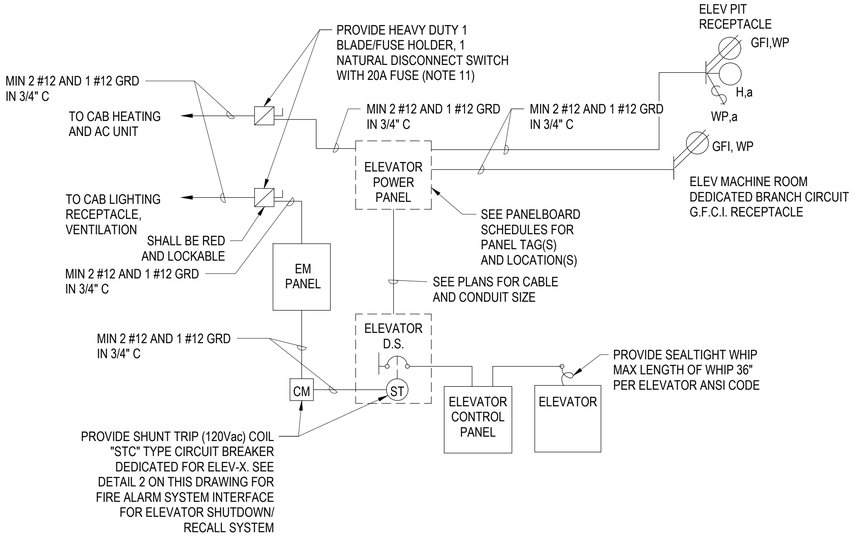

SEE ARCHITECTURAL DRAWINGS FOR ELEVATOR LOCATIONS/SECTIONS/ELEVATIONS
SEE LTG PLAN VIEWS SERIES DRAWINGS FOR LIGHT FIXTURE QUANTITY AND LOCATIONS
SEE POWER PLAN VIEW SERIES DRAWINGS FOR POWER EQUIPMENT/RECEPTACLE LOCATIONS
SEE SCHEDULES FOR EQUIPMENT AND PANELBOARD SCHEDULES

1 ELEVATOR ANCILLARY POWER/CONTROL WIRING DETAIL
NTS

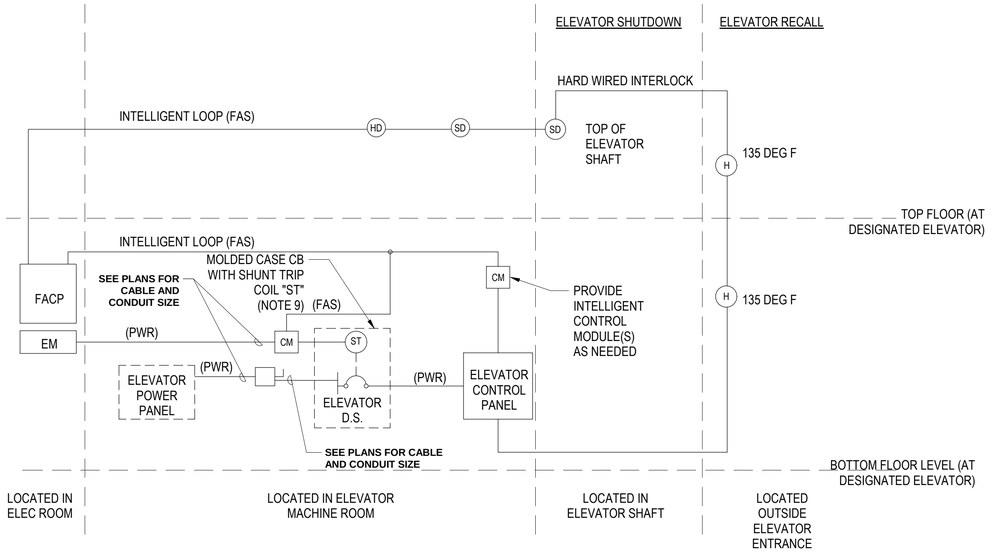

FAS: FIRE ALARM SYSTEM WIRING
PWR: POWER WIRING

2 ELEVATOR SHUT-DOWN RECALL
NTS

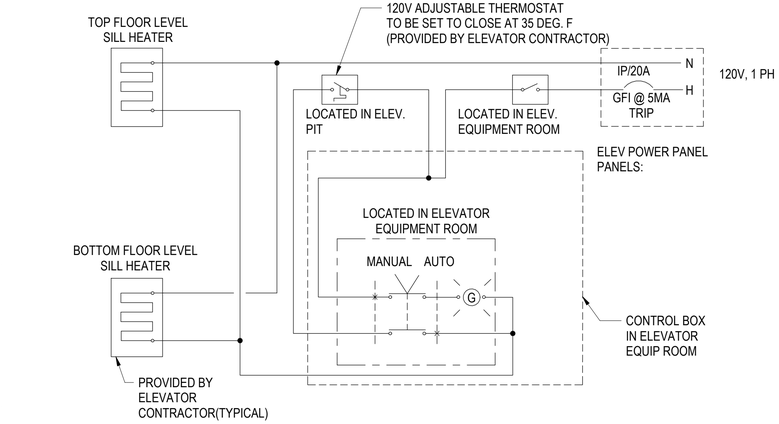

3 ELEVATOR DOOR SILL FREEZE PROTECTION - WIRING DIAGRAM (TYP.)
NTS

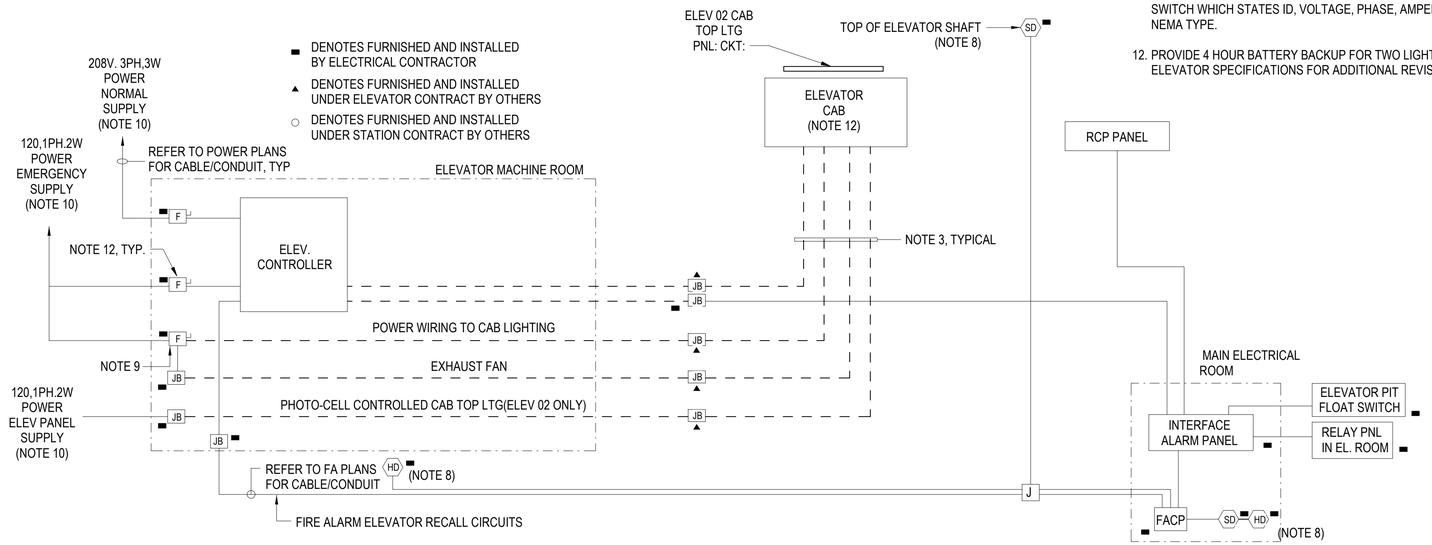

4 ELEVATOR, INTERFACE/RELAY PNLS WIRING BLOCK DIAGRAM
NTS

(NOTES 3, 4, 5, 6, 7, 8, 9, 10)

NOTES:

1. SEE DRAWING E-001 FOR ELECTRICAL SYMBOL LIST.
2. SEE DRAWING E-002 FOR ELECTRICAL GENERAL NOTES AND ABBREVIATIONS.
3. ALL CONDUITS AND WIRING SHOWN WITH "DASHED" LINES WILL BE DESIGNED, FURNISHED AND INSTALLED UNDER ELEVATOR CONTRACT.
4. CONTRACTOR TO FURNISH AND INSTALL ALL OTHER CONDUITS AND WIRING.
5. THE CONDUITS ELECTRICAL ENCLOSURES AND ALL OTHER ELECTRICAL COMPONENTS TO BE ELECTRICALLY ISOLATED FROM EARTH GROUND.
6. FOR FEEDERS AND CONDUITS SCHEDULES REFER TO OTHER PLANS AND DETAILS.
7. ELEVATOR BLOCK DIAGRAM IS TYPICAL FOR ALL ELEVATORS
8. REFER TO FIRE ALARM RISER DIAGRAM FOR CABLE AND CONDUIT REQURIEMENTS.
9. DISCONNECT SWITCH WITH PROVISIONS FOR LOCKING. ENCLOSURE COLOR TO BE RED. DISCONNECT SWITCH TO BE LOCATED ADHJACENT TO ELEVATOR EQUIPMENT ROOM DOOR.
10. REFER TO PANEL SCHEDULES FOR PANEL AND CIRCUIT NUMBERS.
11. FURNISH AND INSTALL EQUIPMENT DISCONNECT SWITCHES IN STRICT COMPLIANCE WITH CHICAGO ELECTRICAL CODE REQUIREMENTS. INCLUDE NAMEPLATE ON EACH DISCONNECT SWITCH WHICH STATES ID, VOLTAGE, PHASE, AMPERES AND NEMA TYPE.
12. PROVIDE 4 HOUR BATTERY BACKUP FOR TWO LIGHTS. REFER TO ELEVATOR SPECIFICATIONS FOR ADDITIONAL REVISIONS.

DESIGN BY:										
DRAWN BY:										
CHECKED BY:										
APPROVED BY:		4	7/3/2023	ISSUED FOR BID	JM	EM	OS			
CDOT/APPROVED BY:		NO.	DATE	REVISIONS	DES.	DRW.	CHK.	DCCO	CDOT	

TRANSYSTEMS
222 SOUTH RIVERSIDE PLAZA SUITE 610
CHICAGO, ILLINOIS 60606

SKIDMORE, OWINGS & MERRILL LLP
224 SOUTH MICHIGAN AVENUE, SUITE 1000
CHICAGO, ILLINOIS 60604

FACET ENGINEERING
4316 NORTH ELSTON AVENUE
CHICAGO, ILLINOIS 60641

CHICAGO DEPARTMENT OF TRANSPORTATION
DIVISION OF ENGINEERING

STATE / LAKE LOOP ELEVATED STATION
200 NORTH STATE STREET, CHICAGO, IL 60601

DIAGRAMS - ELEVATOR CONTROLS

CDOT PROJECT D-1-209

DATE: 9/9/2022

SPEC. NO.

DRAWING NO. E-635

REVISION NO.1

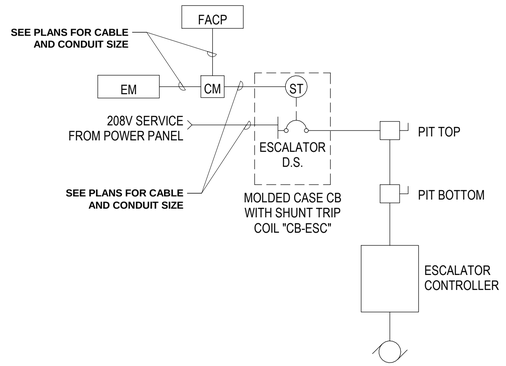

1 ESCALATOR POWER/CONTROL WIRING DETAIL
NTS

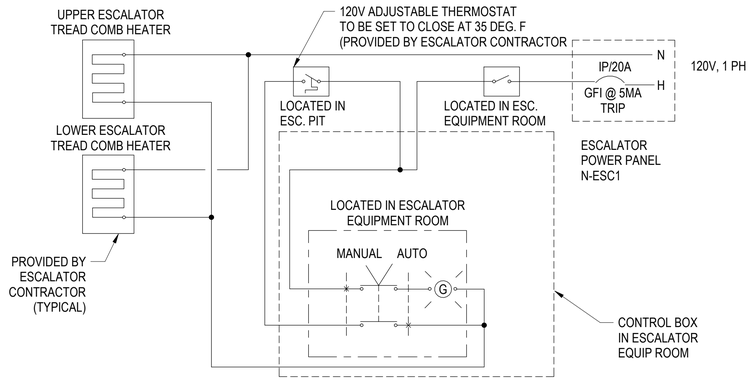

2 ESCALATOR COMB FREEZE PROTECTION - WIRING DIAGRAM (TYP.)
NTS

NOTES:

1. SEE DRAWING E-001 FOR ELECTRICAL SYMBOL LIST.
2. SEE DRAWING E-002 FOR ELECTRICAL GENERAL NOTES AND ABBREVIATIONS.

DESIGN BY:										
DRAWN BY:										
CHECKED BY:										
APPROVED BY:		4	7/3/2023	ISSUED FOR BID	JM	EM	OS			
CDOT/APPROVED BY:		NO.	DATE	REVISIONS	DES.	DRW.	CHK.	DCCO	CDOT	

TRANSYSTEMS
222 SOUTH RIVERSIDE PLAZA SUITE 610
CHICAGO, ILLINOIS 60606

SKIDMORE, OWINGS & MERRILL LLP
224 SOUTH MICHIGAN AVENUE, SUITE 1000
CHICAGO, ILLINOIS 60604

FACET ENGINEERING
4316 NORTH ELSTON AVENUE
CHICAGO, ILLINOIS 60641

CHICAGO DEPARTMENT OF TRANSPORTATION
DIVISION OF ENGINEERING

STATE / LAKE LOOP ELEVATED STATION
200 NORTH STATE STREET, CHICAGO, IL 60601

DIAGRAMS - ESCALATOR CONTROLS

CDOT PROJECT D-1-209

DATE: 9/9/2022

SPEC. NO.

DRAWING NO. E-636

REVISION NO.

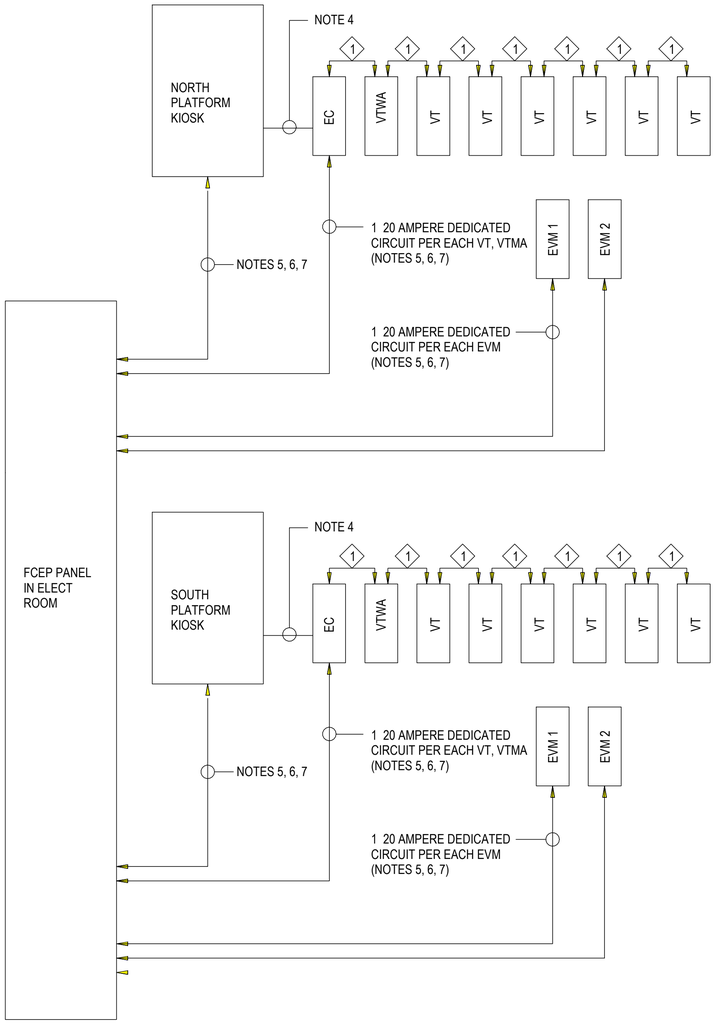

1 FARE CONTROL EQUIPMENT ELECTRICAL POWER
NTS

NOTES:

1. SEE DRAWING E-001 FOR ELECTRICAL SYMBOL LIST.
2. SEE DRAWING E-002 FOR ELECTRICAL GENERAL NOTES AND ABBREVIATIONS.
3. ALL CONDUITS TO ENTER FROM THE EQUIPMENT BOTTOM, U.N.O.
4. REFER TO COMMUNICATION DRAWINGS FOR DATA CABLE AND CONDUIT REQUIREMENTS.
5. ELECTRICAL CONTRACTOR TO PULL ALL POWER AND DATA CABLES BEFORE INSTALLATION AND TO PROVIDE 15 FEET EXTRA LENGTH AT EACH STUB UP OR JUNCTION BOX.
6. REFER TO ELECTRICAL PLANS FOR REVENUE EQUIPMENT POWER REQUIREMENTS.
7. COORDINATE ALL POWER AND DATA CONDUIT ENTRY LOCATIONS WITH FARE CONTROL EQUIPMENT VENDOR.

KEY NOTES:

1 OVERHEAD CONDUIT AND WIRING PART OF THE FARE EQUIPMENT PACKAGE.

LEGEND:

EC - END CABINET
EVM - EXPRESS VENDING MACHINE (VENTRA)
VHBG - VENTRA HIGH BARRIER GATE
VT - VENTRA TURNSTYLE
VTWA - VENTRA TURNSTYLE, WHEELCHAIR ACCESSIBLE

DESIGN BY:										
DRAWN BY:										
CHECKED BY:										
APPROVED BY:		4	7/3/2023	ISSUED FOR BID	JM	EM	OS			
CDOT/APPROVED BY:		NO.	DATE	REVISIONS	DES.	DRW.	CHK.	DCCO	CDOT	

TRANSYSTEMS
222 SOUTH RIVERSIDE PLAZA SUITE 610
CHICAGO, ILLINOIS 60606

SKIDMORE, OWINGS & MERRILL LLP
224 SOUTH MICHIGAN AVENUE, SUITE 1000
CHICAGO, ILLINOIS 60604

FACET ENGINEERING
4316 NORTH ELSTON AVENUE
CHICAGO, ILLINOIS 60641

CHICAGO DEPARTMENT OF TRANSPORTATION
DIVISION OF ENGINEERING

STATE / LAKE LOOP ELEVATED STATION
200 NORTH STATE STREET, CHICAGO, IL 60601

DIAGRAMS - FARE CONTROL EQUIPMENT BLOCK

CDOT PROJECT D-1-209 | DATE: 9/9/2022

SPEC. NO.

DRAWING NO. E-637

REVISION NO.

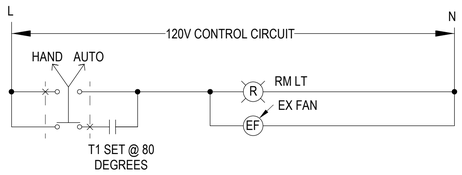

1 TYPICAL EXHAUST FAN CONTROLLED WITH LIGHT SWITCH DIAGRAM

SCALE: N.T.S.

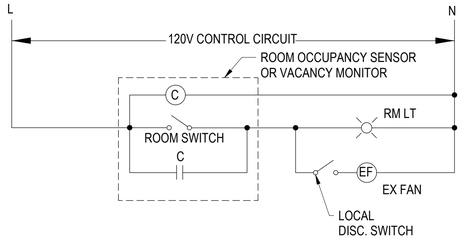

2 TOILET/ JANITOR EXH. FAN CONTROL DIAGRAM

SCALE: N.T.S.

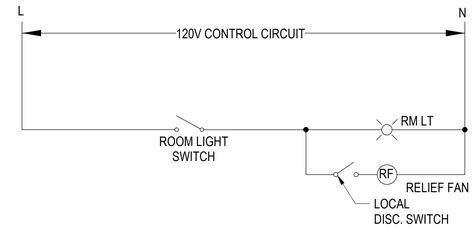

3 KIOSK RELIEF FAN CONTROL DIAGRAM

SCALE: N.T.S.

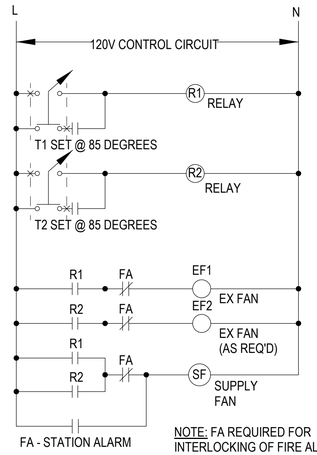

NOTE: FA REQUIRED FOR INTERLOCKING OF FIRE ALARM SYSTEM WHERE RTU SUPPLIES AIR TO STATION.

4 EXHAUST FAN CONTROL DIAGRAM

SCALE: N.T.S.

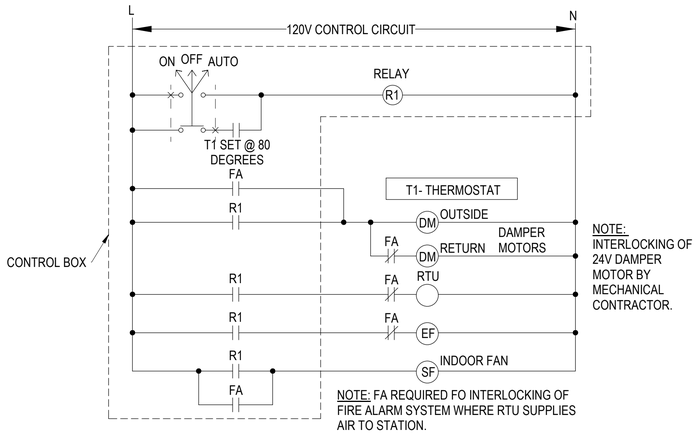

NOTE: INTERLOCKING OF 24V DAMPER MOTOR BY MECHANICAL CONTRACTOR.

NOTE: FA REQUIRED FO INTERLOCKING OF FIRE ALARM SYSTEM WHERE RTU SUPPLIES AIR TO STATION.

5 TYPICAL RTU CONTROL DIAGRAM

SCALE: N.T.S.

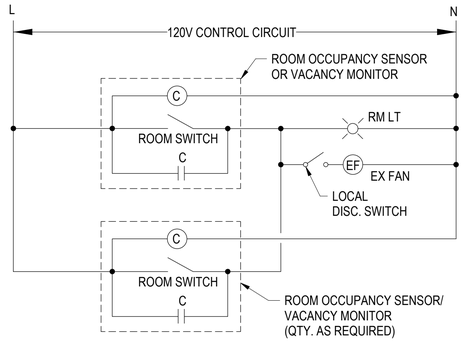

6 LIGHTING CONTROL DIAGRAM

SCALE: N.T.S.

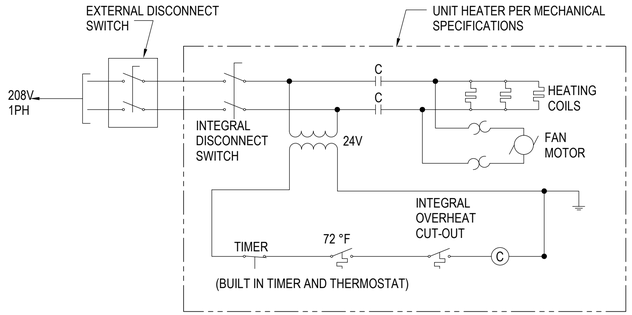

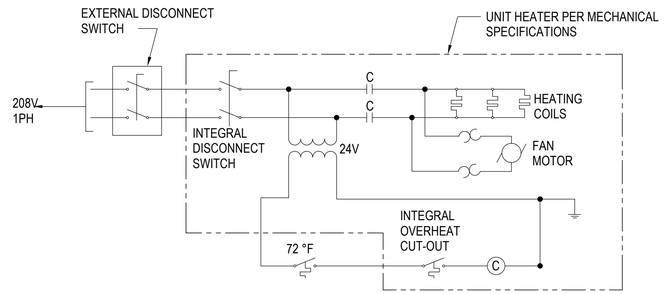

7 TYPICAL UNIT HEATER WIRING DIAGRAM

SCALE: N.T.S.

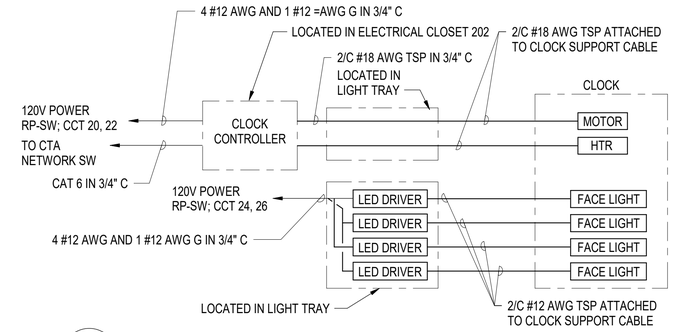

8 CLOCK WIRING DIAGRAM

SCALE: N.T.S.

DESIGN BY:											
DRAWN BY:											
CHECKED BY:											
APPROVED BY:		4	7/3/2023	ISSUED FOR BID	JM	EM	OS				
CDOT/APPROVED BY:		NO.	DATE	REVISIONS	DES.	DRW.	CHK.	DCCO	CDOT		

TRANSYSTEMS
222 SOUTH RIVERSIDE PLAZA SUITE 610
CHICAGO, ILLINOIS 60606

SKIDMORE, OWINGS & MERRILL LLP
224 SOUTH MICHIGAN AVENUE, SUITE 1000
CHICAGO, ILLINOIS 60604

FACET ENGINEERING
4316 NORTH ELSTON AVENUE
CHICAGO, ILLINOIS 60641

CHICAGO DEPARTMENT
OF TRANSPORTATION
DIVISION OF ENGINEERING

STATE / LAKE LOOP ELEVATED STATION
200 NORTH STATE STREET, CHICAGO, IL 60601

SPEC. NO.

DIAGRAMS - CONTROL DIAGRAMS

DRAWING NO.
E-638

CDOT PROJECT D-1-209

DATE: 9/9/2022

REVISION NO.

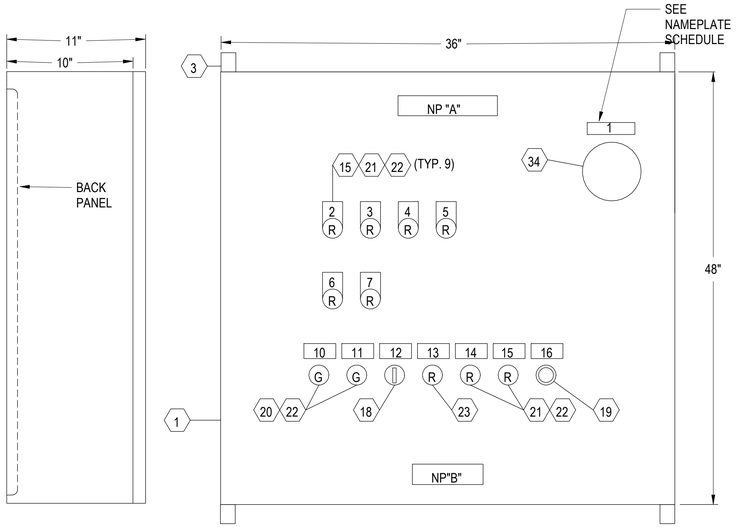

LEFT SIDE VIEW

FRONT VIEW

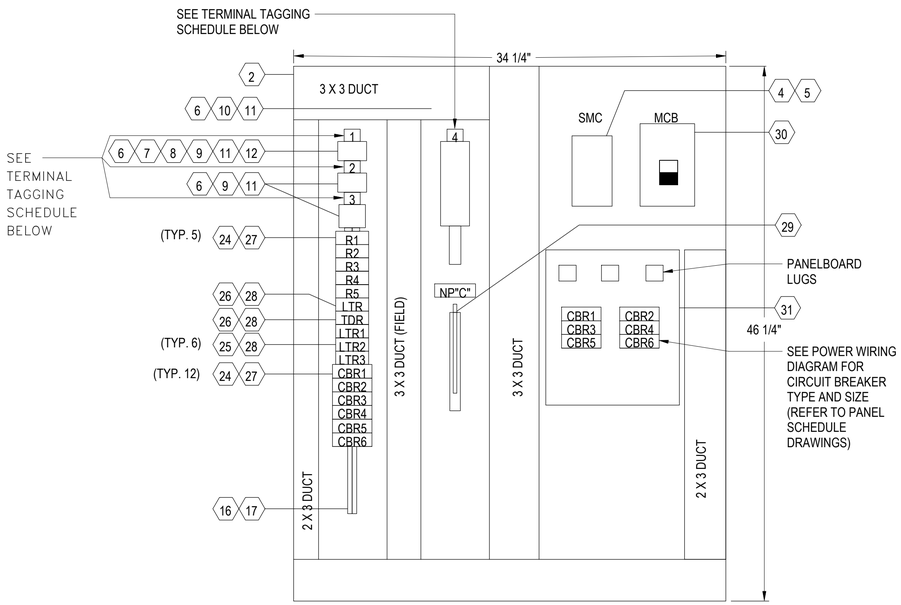

BACK PANEL

1 SNOW MELT PROTECTION PANEL

NTS

NAMEPLATE SCHEDULE

NP	FIRST LINE	SECOND LINE	NP	FIRST LINE	SECOND LINE
1	MAIN DISCONNECT		12	SNOW MELT	HAND OFF AUTO
2	CIRCUIT BREAKER	NO. 1 OFF	13	COMMON ALARM	PUSH TO ACKNOWLEDGE
3	CIRCUIT BREAKER	NO. 2 OFF	14	SNOW MELT CONTACTOR	FAILURE ALARM
4	CIRCUIT BREAKER	NO. 3 OFF	15	SNOW MELT	LOW TEMP.
5	CIRCUIT BREAKER	NO. 4 OFF	16	LAMP TEST	
6	CIRCUIT BREAKER	NO. 5 OFF	A	SM - #	
7	CIRCUIT BREAKER	NO. 6 OFF	B	SEE LEGEND	
10	POWER ON		C	GRD BUS	
11	SNOW MELT CONTACTOR	ENERGIZED			

LEGEND

ITEM	DESCRIPTION
1	48" HIGH X 36" WIDE X 10" DEEP, NEMA 12, CARBON STEEL ENCLOSURE
2	46 1/4" HIGH X 34 1/4" WIDE BACK PANEL
3	MOUNTING FOOT KIT
4	3 POLE, 250 AMP RESISTIVE, 120 VOLT COIL, 600 VOLT, IEC CONTACTOR
5	1-NO AND NC AUXILIARY CONTACT BLOCK
6	TYPE SCHT5, LABLE HOLDER AND CLEAR COVER
7	TYPE WSI 6/2 LED, 600 VAC, 16 AMP, FUSE TERMINAL BLOCK
8	TYPE WAP 2/5-10, FUSE END SECTION
9	TYPE WDU4, 600 VAC, 35 AMP, #22 - #10 AWG, WEMID, TERMINAL
10	TYPE WDU10, 600 VAC, 65 AMP, # 18 - #6 AWG, WEMID, TERMINAL BLOCK
11	TYPE WEW 35/2, WEMID END SECTION/ END BRACKET
12	5 AMP, 250 VOLT, 1/4" X 1 1/4" FUSE
13	2" WIDE X 3" HIGH WHITE WIRE DUCT WITH COVER
14	3" WIDE X 3" HIGH WHITE WIRE DUCT WITH COVER
15	GRAVOPLY LEGEND PLATE
16	RELAY SOCKET MOUNTING RAIL
17	END CLAMP
18	3 POSITION, MAINTAINED, FINGER-SAFE SELECTOR SWITCH
19	1 NO., BLACK, MOMENTARY, FINGER-SAFE PUSH BUTTON
20	120 VOLT AC, GREEN LED, PILOT LIGHT
21	120 VOLT AC, RED LED, PILOT LIGHT
22	COVER FOR "APW" PILOT LIGHT
23	120 VOLT AC, RED LED, MOMENTARY, FINGER-SAFE ILLUMINATED PUSH BUTTON
24	DPDT, 10 AMP, 120 VOLT AC COIL, BLADE TYPE RELAY
25	4PDT, 3 AMP, 120 VOLT AC COIL, BLADE TYPE RELAY
26	DPDT, 5 AMP, 120 VOLT AC COIL, ADJUSTABLE 3 SEC TO 30 MIN TIME RANGE, ON DELAY, TIMER
27	250 VOLT, 10 AMP, 8 BLADE, FINGER-SAFE SOCKET
28	250 VOLT, 7 AMP, 14 BLADE, FINGER-SAFE SOCKET
29	30 CIRCUIT, 200 AMP, EQUIPMENT GROUND BAR WITH ONE #1- #4/0 LUGS
30	3 POLE, 150 AMP, 100,000 AIC, 240 VOLT, THERMAL MAGNETIC MAIN CIRCUIT BREAKER
31	208/120 VOLT, 3 PHASE, 4 WIRE, 225 AMP, MAIN LUGS ONLY, COPPER BUS, 12 SPACE, PANELBOARD
32	1 POLE, 20 AMP, 120 VOLT, BOLT-ON, 30 MILLIAMP GROUND FAULT TRIP, CIRCUIT
33	1 POLE CIRCUIT BREAKER HANDLE PADLOCK
34	DOOR-MOUNTED CIRCUIT BREAKER OPERATING MECHANISM

TERMINAL TAGGING SCHEDULE

NP	FIRST LINE	SECOND LINE	THIRD LINE
1	TB1	FUSE FU1 5 AMP	CONTROL POWER
2	TB2	AMBIENT THERMOSTAT	INPUT
3	TB3	ALARM	OUTPUT
4	TB4	LOAD POWER	

NAMEPLATE "A"

MATERIAL:
1 1/4"X 7" WHITE GRAVOPLY WITH BLACK LETTERS.
FOAM ADHESIVE TAPE. 1/4" LETTER SIZE N.T.S.

NAMEPLATE "B"

MATERIAL:
3 1/2"X 4" WHITE GRAVOPLY WITH BLACK LETTERS.
FOAM ADHESIVE TAPE. 1/8" AND 1/4" LETTER SIZE N.T.S.

USE 75°C MINIMUM COPPER CONDUCTORS FOR FIELD WIRE

NAMEPLATE "C"

MATERIAL:
1"X 2" WHITE GRAVOPLY WITH BLACK LETTERS.
FOAM ADHESIVE TAPE. 3/16" LETTER SIZE N.T.S.

DESIGN BY:									
DRAWN BY:									
CHECKED BY:									
APPROVED BY:		4	7/3/2023	ISSUED FOR BID	JM	EM	OS		
CDOT/APPROVED BY:		NO.	DATE	REVISIONS	DES.	DRW.	CHK.	DCCO	CDOT

TRANSYSTEMS
222 SOUTH RIVERSIDE PLAZA SUITE 610
CHICAGO, ILLINOIS 60606

SKIDMORE, OWINGS & MERRILL LLP
224 SOUTH MICHIGAN AVENUE, SUITE 1000
CHICAGO, ILLINOIS 60604

FACET ENGINEERING
4316 NORTH ELSTON AVENUE
CHICAGO, ILLINOIS 60641

CHICAGO DEPARTMENT OF TRANSPORTATION
DIVISION OF ENGINEERING

STATE / LAKE LOOP ELEVATED STATION
200 NORTH STATE STREET, CHICAGO, IL 60601

DIAGRAMS - CANOPY SNOW MELT PANEL WIRING DIAGRAM PART 1

CDOT PROJECT D-1-209 | DATE: 9/9/2022

SPEC. NO.

DRAWING NO. E-639

REVISION NO.

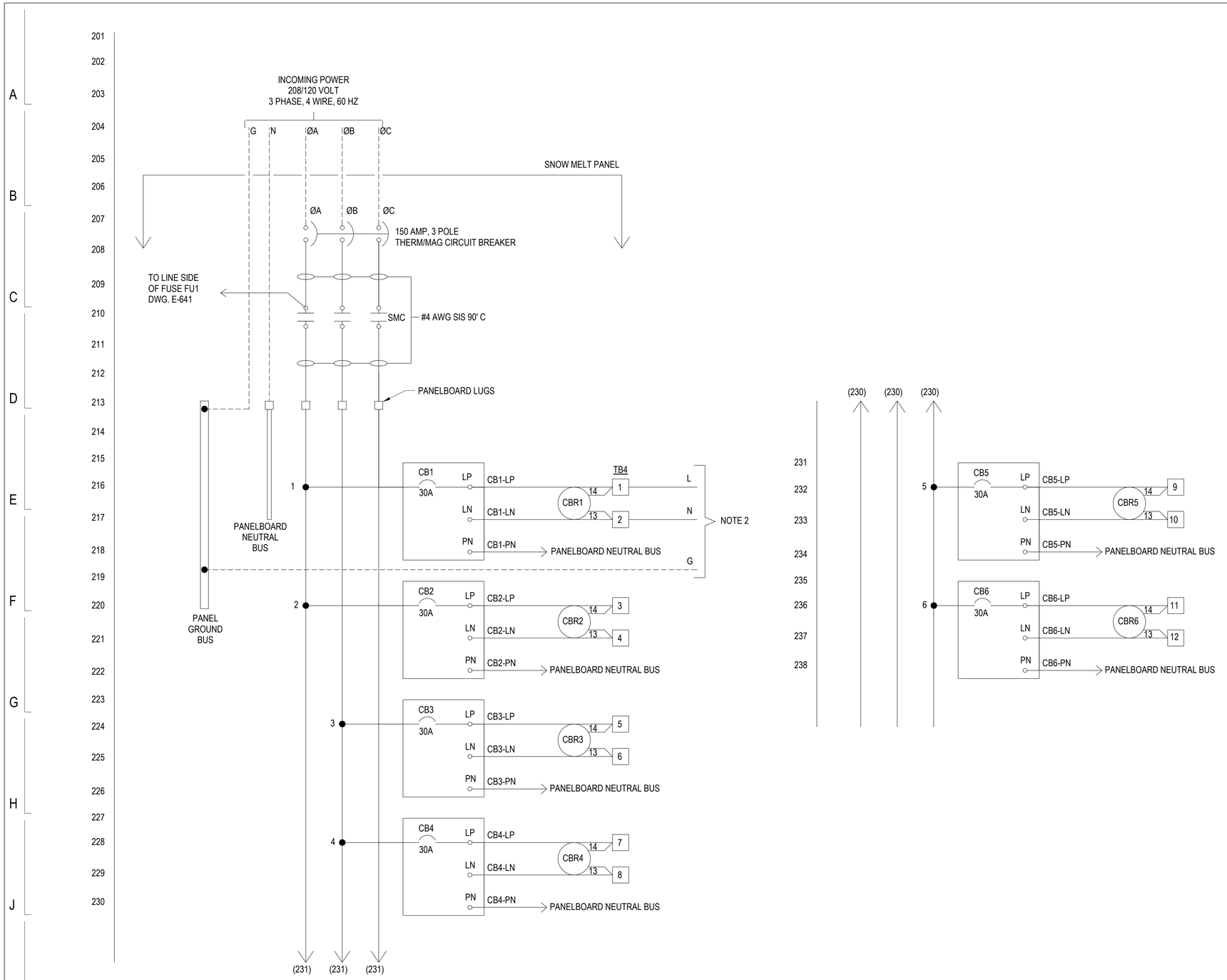

NOTES

1. DASHED LINES INDICATE FIELD WIRING.
2. PROVIDE 2-#10AWG AND 1-#10AWG(G) FOR UP TO 100' POWER FEEDS, 2-#8AWG AND 1-#8AWG(G) FOR 100' TO 150' POWER FEEDS, AND 2-#6AWG AND 1-#6AWG(G) FOR OVER 150' POWER FEEDS PER CIRCUIT. PROVIDE UP TO A MAXIMUM OF 3 CIRCUITS PER HOME RUN.

DESIGN BY:									
DRAWN BY:									
CHECKED BY:									
APPROVED BY:		4	7/3/2023	ISSUED FOR BID	JM	EM	OS		
CDOT/APPROVED BY:		NO.	DATE	REVISIONS	DES.	DRW.	CHK.	DCCO	CDOT

TRANSYSTEMS
222 SOUTH RIVERSIDE PLAZA SUITE 610
CHICAGO, ILLINOIS 60606

SKIDMORE, OWINGS & MERRILL LLP
224 SOUTH MICHIGAN AVENUE, SUITE 1000
CHICAGO, ILLINOIS 60604

FACET ENGINEERING
4316 NORTH ELSTON AVENUE
CHICAGO, ILLINOIS 60641

CHICAGO DEPARTMENT OF TRANSPORTATION
DIVISION OF ENGINEERING

STATE / LAKE LOOP ELEVATED STATION
200 NORTH STATE STREET, CHICAGO, IL 60601

DIAGRAMS - CANOPY SNOW MELT PANEL WIRING DIAGRAM PART 2

CDOT PROJECT D-1-209 | DATE: 9/9/2022

SPEC. NO.

DRAWING NO. E-640

REVISION NO.

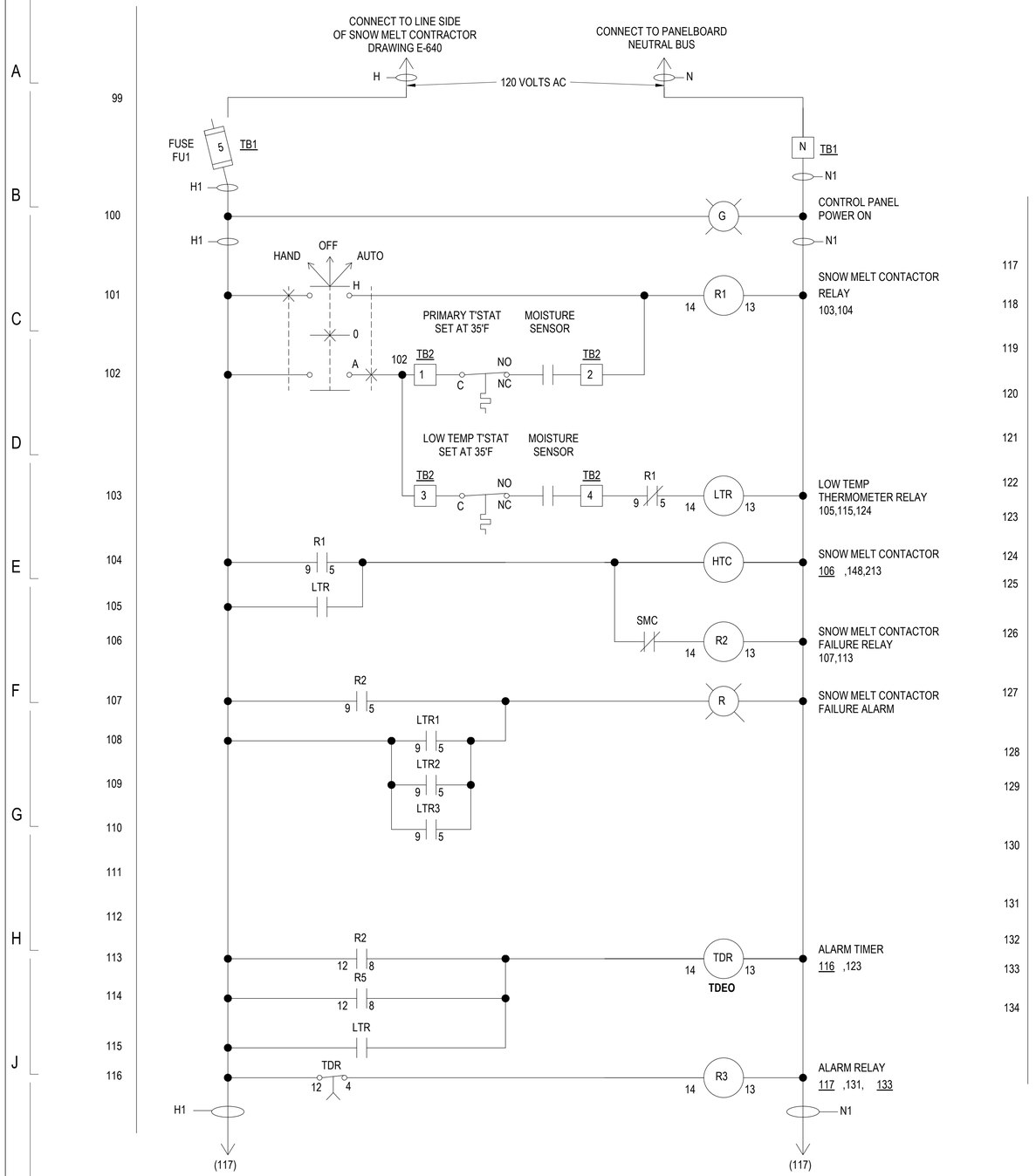

NOTES

1. DASHED LINES INDICATE FIELD WIRING
2. PANEL ALARM OUTPUT CONTACTS SHOWN IN ALARM MODE.
   NORMAL: R3 ENERGIZED
   ALARM: R3 DE-ENERGIZED

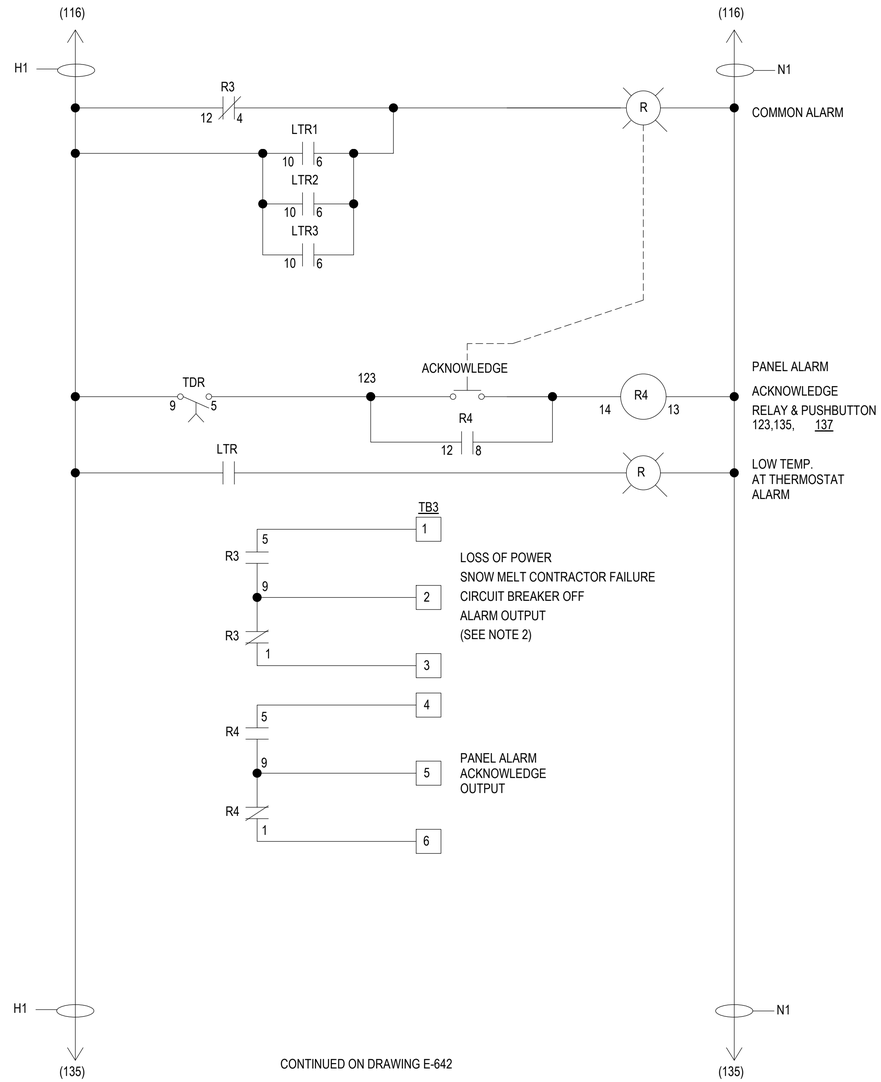

CONTINUED ON DRAWING E-642

DESIGN BY:									
DRAWN BY:									
CHECKED BY:									
APPROVED BY:		4	7/3/2023	ISSUED FOR BID	JM	EM	OS		
CDOT/APPROVED BY:		NO.	DATE	REVISIONS	DES.	DRW.	CHK.	DCCO	CDOT

TRANSYSTEMS
222 SOUTH RIVERSIDE PLAZA SUITE 610
CHICAGO, ILLINOIS 60606

SKIDMORE, OWINGS & MERRILL LLP
224 SOUTH MICHIGAN AVENUE, SUITE 1000
CHICAGO, ILLINOIS 60604

FACET ENGINEERING
4316 NORTH ELSTON AVENUE
CHICAGO, ILLINOIS 60641

CHICAGO DEPARTMENT OF TRANSPORTATION
DIVISION OF ENGINEERING

STATE / LAKE LOOP ELEVATED STATION
200 NORTH STATE STREET, CHICAGO, IL 60601

DIAGRAMS - CANOPY SNOW MELT PANEL WIRING DIAGRAM PART 3

CDOT PROJECT D-1-209

DATE: 9/9/2022

SPEC. NO.

DRAWING NO. E-641

REVISION NO.

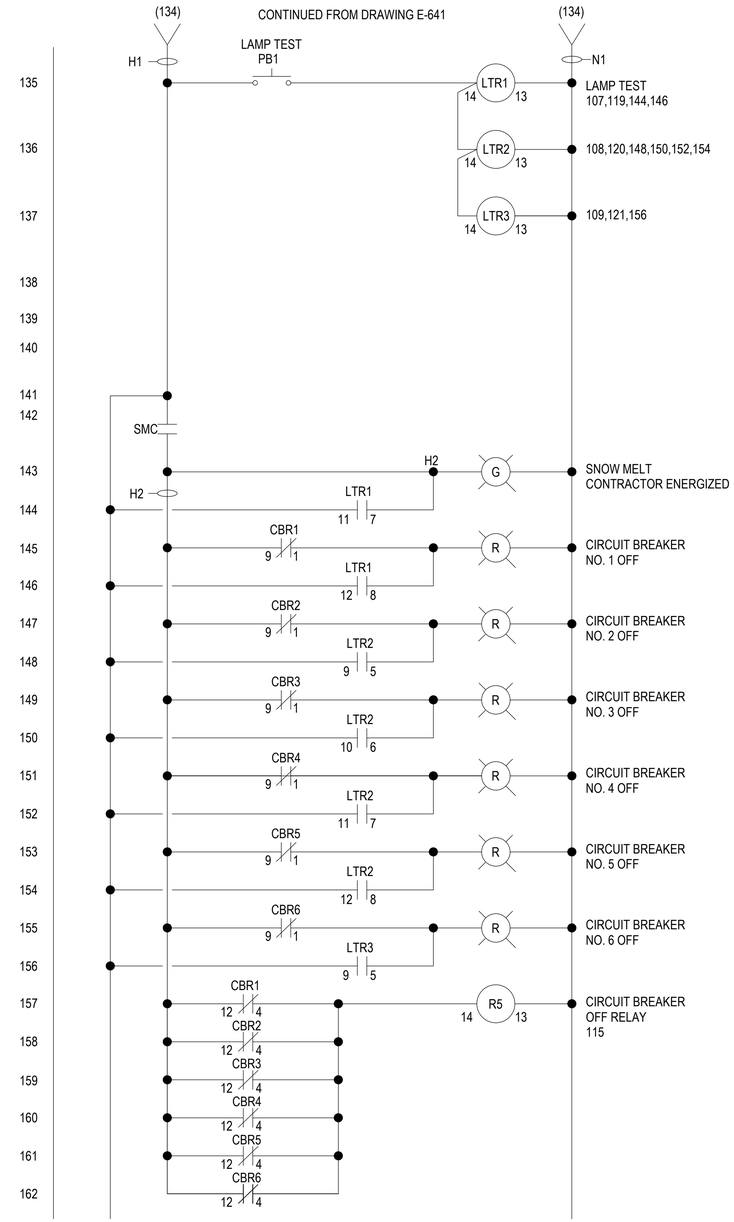

NOTES

1. DASHED LINES INDICATE FIELD WIRING.
2. PANEL ALARM OUTPUT CONACTS SHOWN IN ALARM MODE.
   NORMAL: R3 ENERGIZED
   ALARM: R3 DE-ENERGIZED

DESIGN BY:									
DRAWN BY:									
CHECKED BY:									
APPROVED BY:		4	7/3/2023	ISSUED FOR BID	JM	EM	OS		
CDOT/APPROVED BY:		NO.	DATE	REVISIONS	DES.	DRW.	CHK.	DCCO	CDOT

TRANSYSTEMS
222 SOUTH RIVERSIDE PLAZA SUITE 610
CHICAGO, ILLINOIS 60606

SKIDMORE, OWINGS & MERRILL LLP
224 SOUTH MICHIGAN AVENUE, SUITE 1000
CHICAGO, ILLINOIS 60604

FACET ENGINEERING
4316 NORTH ELSTON AVENUE
CHICAGO, ILLINOIS 60641

CHICAGO DEPARTMENT OF TRANSPORTATION
DIVISION OF ENGINEERING

STATE / LAKE LOOP ELEVATED STATION
200 NORTH STATE STREET, CHICAGO, IL 60601

SPEC. NO.

DIAGRAMS - CANOPY SNOW MELT PANEL WIRING DIAGRAM PART 4

DRAWING NO. E-642

CDOT PROJECT D-1-209

DATE: 9/9/2022

REVISION NO.

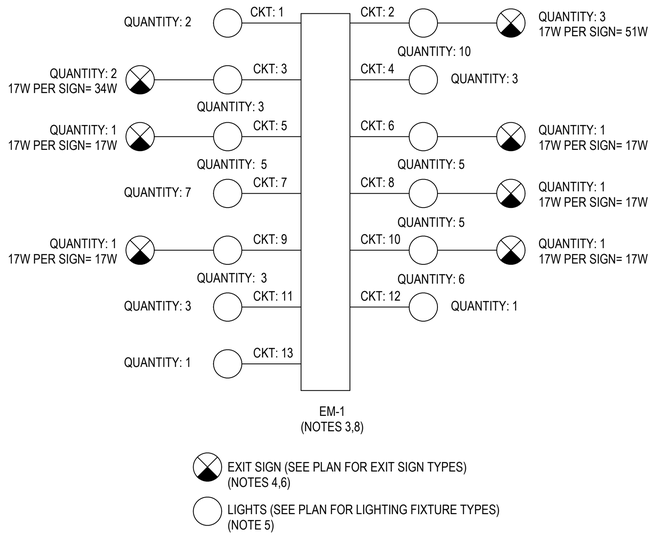

1 EM-1 SINGLE LINE DIAMGRAM
NTS

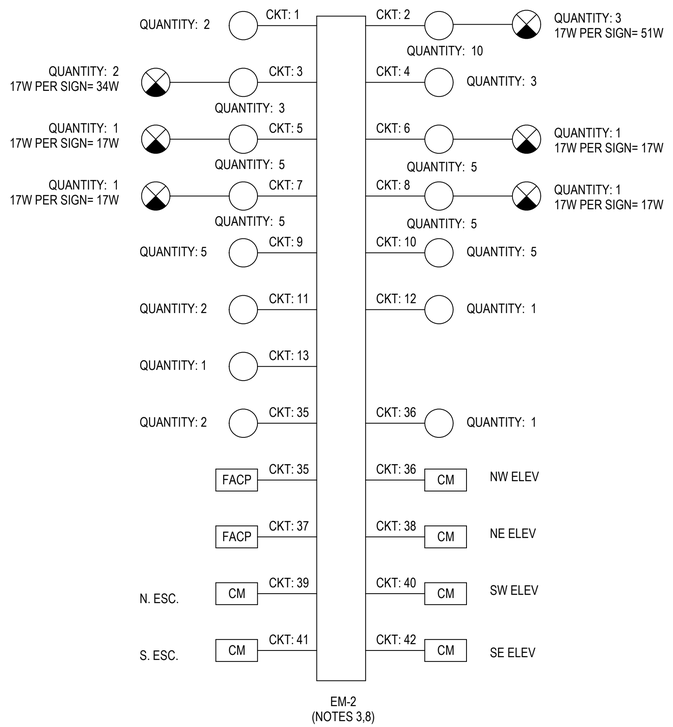

2 EM-2 SINGLE LINE DIAMGRAM
NTS

NOTES:

1. SEE DRAWING E-001 FOR ELECTRICAL SYMBOL LIST.
2. SEE DRAWING E-002 FOR ELECTRICAL GENERAL NOTES AND ABBREVIATIONS.
3. ALL CIRCUITS ARE FED FROM LOCKABLE CIRCUIT BREAKERS.
4. EXIT SIGNS ARE FED USING 2#12 AWG, 1#12(G), 3/4" RGS C THHN/THWN COPPER CABLE.
5. ONLY WIRE SERVING EMERGENCY LIGHTING TO BE INSTALLED IN CONDUIT/RACEWAY AND JUNCTION BOXES SERVING EMERGENCY AND EXIT SIGN LIGHTS.
6. WIRE SERVING EXIT SIGNS ARE NOT TO BE IN CONDUIT WITH NORMAL AND RELIABLE POWER OR NORMAL AND RELIABLE LIGHTING WIRING.
7. CONTRACTOR TO INSTALL A 4-HOUR BATTERY BACK UP LIGHT FOR EACH ELEVATOR. REFER TO ELEVATOR SPECIFICATIONS.
8. REFER TO PANEL SCHEDULES ON DRAWING E-613 THRU E-616.

DESIGN BY:										
DRAWN BY:										
CHECKED BY:										
APPROVED BY:		4	7/3/2023	ISSUED FOR BID	JM	EM	SM			
CDOT/APPROVED BY:		NO.	DATE	REVISIONS	DES.	DRW.	CHK.	DCCO	CDOT	

TRANSYSTEMS
222 SOUTH RIVERSIDE PLAZA SUITE 610
CHICAGO, ILLINOIS 60606

SKIDMORE, OWINGS & MERRILL LLP
224 SOUTH MICHIGAN AVENUE, SUITE 1000
CHICAGO, ILLINOIS 60604

FACET ENGINEERING
4316 NORTH ELSTON AVENUE
CHICAGO, ILLINOIS 60641

CHICAGO DEPARTMENT OF TRANSPORTATION
DIVISION OF ENGINEERING

STATE / LAKE LOOP ELEVATED STATION
200 NORTH STATE STREET, CHICAGO, IL 60601

EM-1 AND EM-2 SINGLE LINE DIAGRAMS

CDOT PROJECT D-1-209

DATE: 9/9/2022

SPEC. NO.

DRAWING NO. E-901

REVISION NO.

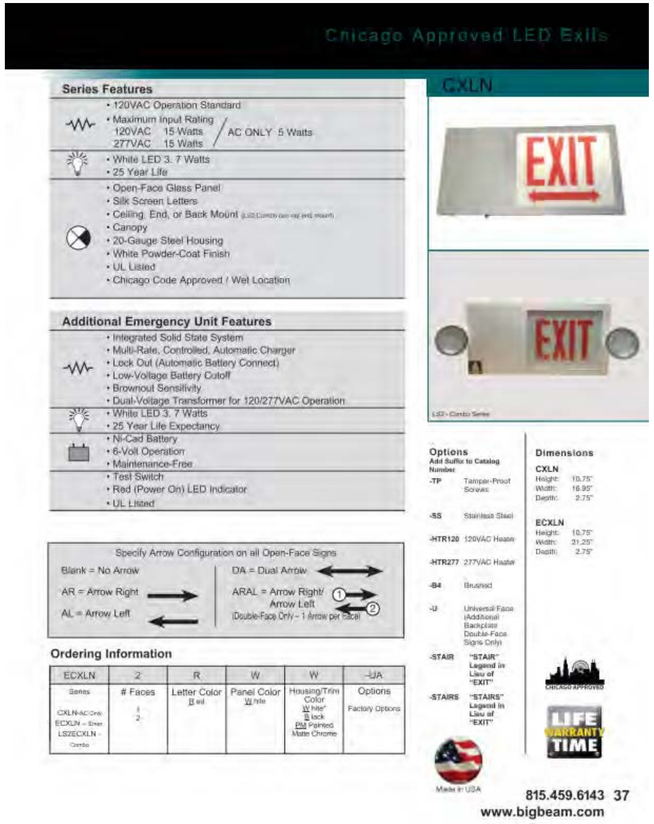

EMERGENCY / EXIT SYMBOL LIST

TYPE	SYMBOL	DESCRIPTION	MANUFACTURER & CATALOG NUMBER	NUMBER OF LAMPS	LAMP TYPE & WATTAGE	VOLTAGE	MOUNTING	MOUNTING HEIGHT	NOTES
#2A		STAIR EXIT SIGN, ELECTRIC, 120 VOLT, LED LIGHT SOURCE, GLASS PANEL, CHICAGO CODE APPROVED, EMERGENCY BACK-UP POWER	BIG BEAM: ECXLN2RWW-SS-TP-HTR277-TM OR APPROVED EQUAL	LED ARRAY	LED 3.7W	277	CEILING/ WALL/ PENDANT	SEE ARCH. DWGS	
#3		EXIT SIGN, ELECTRIC, 120 VOLT, LED LIGHT SOURCE, GLASS PANEL, CHICAGO CODE APPROVED, EMERGENCY BACK-UP POWER	BIG BEAM: ECXLN2RWW-SS-TP-HTR277-TM OR APPROVED EQUAL	LED ARRAY	LED 3.7W	277	CEILING/ WALL/ PENDANT	SEE ARCH. DWGS	
#6		EXIT SIGN, ELECTRIC, 120 VOLT, LED LIGHT SOURCE, RIGHT ARROW, GLASS PANEL, CHICAGO CODE APPROVED, EMERGENCY BACK-UP POWER	BIG BEAM: ECXLN2RWW-SS-TP-HTR277-TM-AR OR APPROVED EQUAL	LED ARRAY	LED 3.7W	277	CEILING/ WALL/ PENDANT	SEE ARCH. DWGS	
#9		EXIT SIGN, ELECTRIC, 120 VOLT, LED LIGHT SOURCE, LEFT ARROW, GLASS PANEL, CHICAGO CODE APPROVED, EMERGENCY BACK-UP POWER	BIG BEAM: ECXLN2RWW-SS-TP-HTR277-TM-AL OR APPROVED EQUAL	LED ARRAY	LED 3.7W	277	CEILING/ WALL/ PENDANT	SEE ARCH. DWGS	
#18		EXIT SIGN, ELECTRIC, 120 VOLT, LED LIGHT SOURCE, DOUBLE FACE ARROW, GLASS PANEL, CHICAGO CODE APPROVED, EMERGENCY BACK-UP POWER	BIG BEAM: ECXLN2RWW-SS-TP-HTR277-TM-ARAL/ARAR OR APPROVED EQUAL	LED ARRAY	LED 3.7W	277	CEILING/ WALL/ PENDANT	SEE ARCH. DWGS	
#20		STAIRWAY SIGN, ELECTRIC, 120 VOLT, LED LIGHT SOURCE, DOUBLE FACE ARROW, GLASS PANEL, CHICAGO CODE APPROVED, EMERGENCY BACK-UP POWER	BIG BEAM: ECXLN2RWW-SS-TP-HTR277-TM-ARAL/ARAR OR APPROVED EQUAL	LED ARRAY	LED 3.7W	277	CEILING/ WALL/ PENDANT	SEE ARCH. DWGS	

CITY OF CHICAGO EXIT SIGN CODES

	SINGLE FACE EXIT	DOUBLE FACE EXIT	SINGLE FACE STAIRWAY	DOUBLE FACE STAIRWAY	SINGLE FACE STAIR	DOUBLE FACE STAIR
NO ARROWS	3	18	2	17	2A	17A
ARROW RIGHT	6	21	5	20	5A	20A
ARROW LEFT	9	21	8	20	8A	20A
DOUBLE ARROW	12	24	11	23	11A	23A

EMERGENCY CABLE AND CONDUIT SCHEDULE

TAG NUMBER	SETS	CABLE DESCRIPTION	CONDUIT (QTY) SIZE (IN.)	NOTES
E101	1	2 #12AWG + 1 #1AWG G.	IN RACEWAY	
E102	1	2 #12AWG + 1 #1AWG G.	3/4" C.	

DESIGN BY:										
DRAWN BY:										
CHECKED BY:										
APPROVED BY:		4	7/3/2023	ISSUED FOR BID	EM	EM	JM			
CDOT/APPROVED BY:		NO.	DATE	REVISIONS	DES.	DRW.	CHK.	DCCO	CDOT	

TRANSYSTEMS
222 SOUTH RIVERSIDE PLAZA SUITE 610
CHICAGO, ILLINOIS 60606

SKIDMORE, OWINGS & MERRILL LLP
224 SOUTH MICHIGAN AVENUE, SUITE 1000
CHICAGO, ILLINOIS 60604

FACET ENGINEERING
4316 NORTH ELSTON AVENUE
CHICAGO, ILLINOIS 60641

CHICAGO DEPARTMENT OF TRANSPORTATION
DIVISION OF ENGINEERING

STATE / LAKE LOOP ELEVATED STATION
200 NORTH STATE STREET, CHICAGO, IL 60601

EMERGENCY SCHEDULES

CDOT PROJECT D-1-209 | DATE: 9/9/2022

SPEC. NO.

DRAWING NO. E-902

REVISION NO.

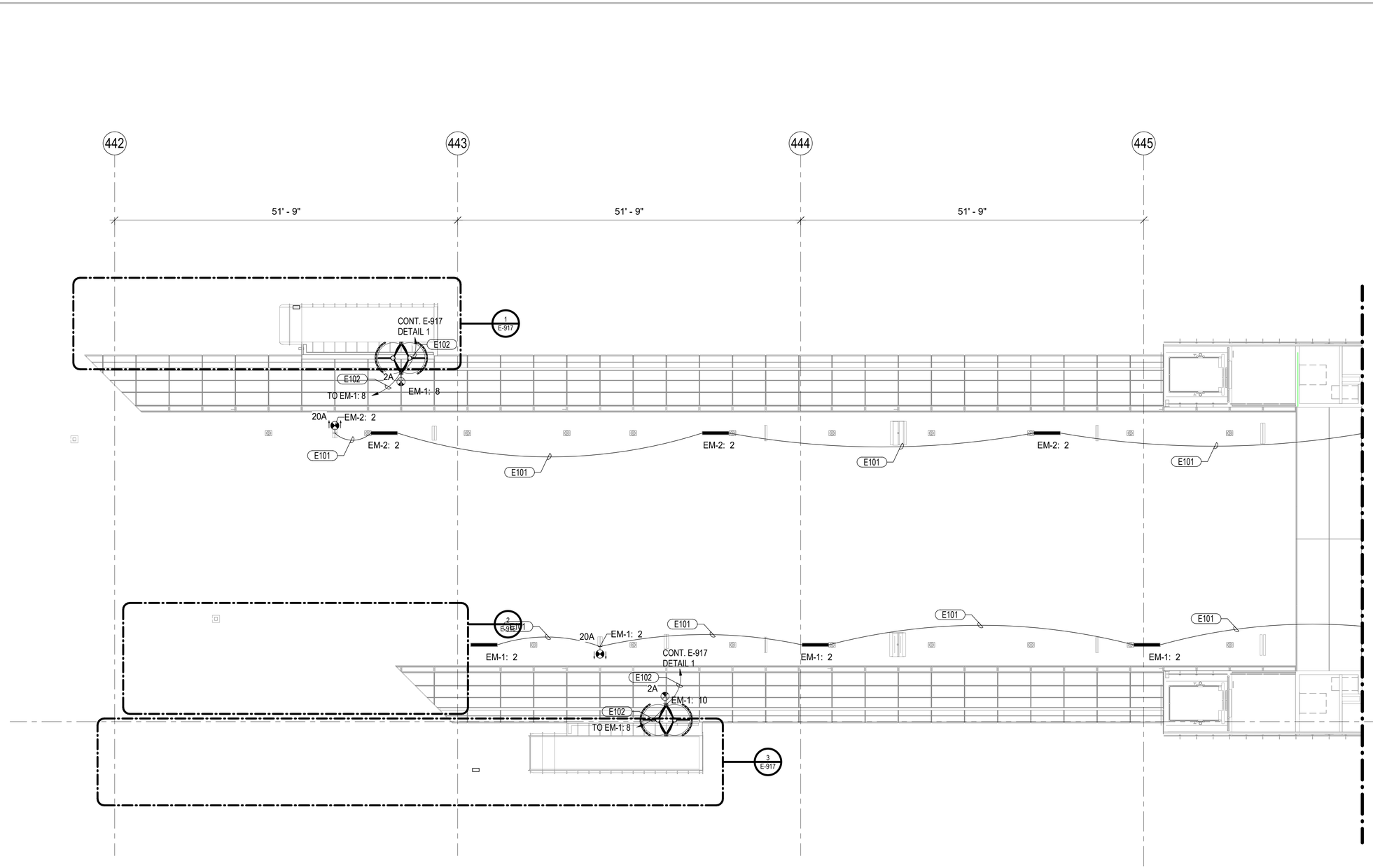

1 PLATFORM LEVEL EMERGENCY LIGHTING PLANS - PART 1

1/8" = 1'-0"

LAKE ST. KEY PLAN:

NO.	DATE	REVISIONS	DES.	DRW.	CHK.	DCCO	CDOT
4	7/3/2023	ISSUED FOR BID	EM	EM	JM		

DESIGN BY:
DRAWN BY:
CHECKED BY:
APPROVED BY:
CDOT/APPROVED BY:

TRANSYSTEMS
222 SOUTH RIVERSIDE PLAZA SUITE 610
CHICAGO, ILLINOIS 60606

SKIDMORE, OWINGS & MERRILL LLP
224 SOUTH MICHIGAN AVENUE, SUITE 1000
CHICAGO, ILLINOIS 60604

FACET ENGINEERING
DBE/MBE CERTIFIED
Performance • Respect • Initiation • Dedication • Experience
FACET ENGINEERING
4316 NORTH ELSTON AVENUE
CHICAGO, ILLINOIS 60641

CHICAGO DEPARTMENT OF TRANSPORTATION
DIVISION OF ENGINEERING

STATE / LAKE LOOP ELEVATED STATION
200 NORTH STATE STREET, CHICAGO, IL 60601

PLATFORM LEVEL - EMERGENCY LIGHTING PLAN - WEST

CDOT PROJECT D-1-209

DATE: 9/9/2022

SPEC. NO.

DRAWING NO. E-911

REVISION NO.

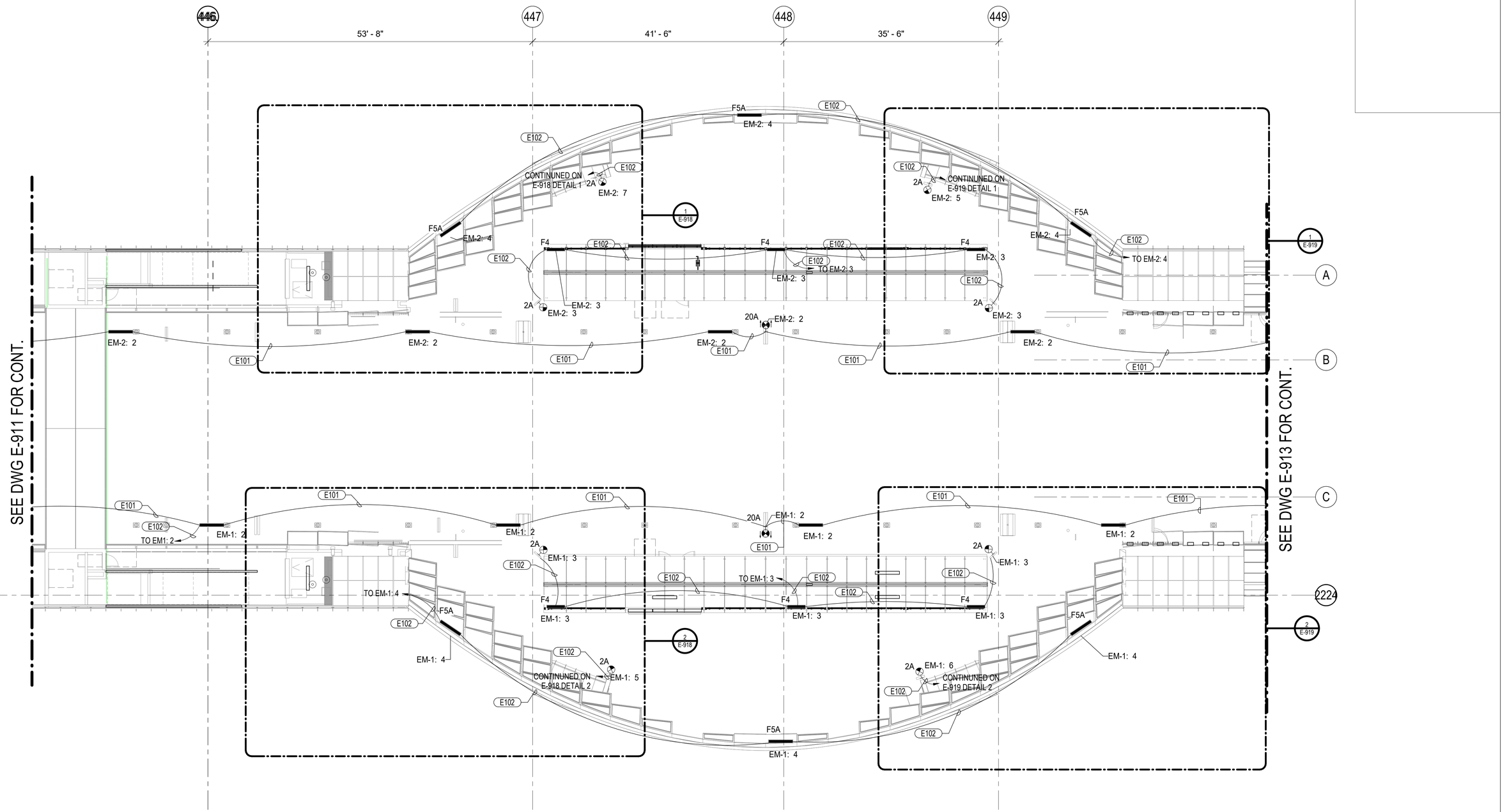

1 PLATFORM LEVEL EMERGENCY LIGHTING PLANS - PART 2

1/8" = 1'-0"

LAKE ST. KEY PLAN:

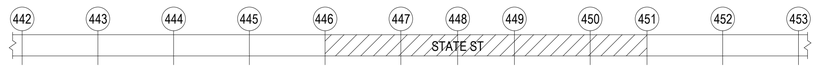

DESIGN BY:										
DRAWN BY:										
CHECKED BY:										
APPROVED BY:		4	7/3/2023	ISSUED FOR BID	EM	EM	JM			
CDOT/APPROVED BY:		NO.	DATE	REVISIONS	DES.	DRW.	CHK.	DCCO	CDOT	

TRANSYSTEMS
222 SOUTH RIVERSIDE PLAZA SUITE 610
CHICAGO, ILLINOIS 60606

SKIDMORE, OWINGS & MERRILL LLP
224 SOUTH MICHIGAN AVENUE, SUITE 1000
CHICAGO, ILLINOIS 60604

FACET ENGINEERING
4316 NORTH ELSTON AVENUE
CHICAGO, ILLINOIS 60641

CHICAGO DEPARTMENT OF TRANSPORTATION
DIVISION OF ENGINEERING

STATE / LAKE LOOP ELEVATED STATION
200 NORTH STATE STREET, CHICAGO, IL 60601

PLATFORM LEVEL - EMERGENCY LIGHTING PLAN - CENTER

CDOT PROJECT D-1-209

DATE: 9/9/2022

SPEC. NO.

DRAWING NO. E-912

REVISION NO.

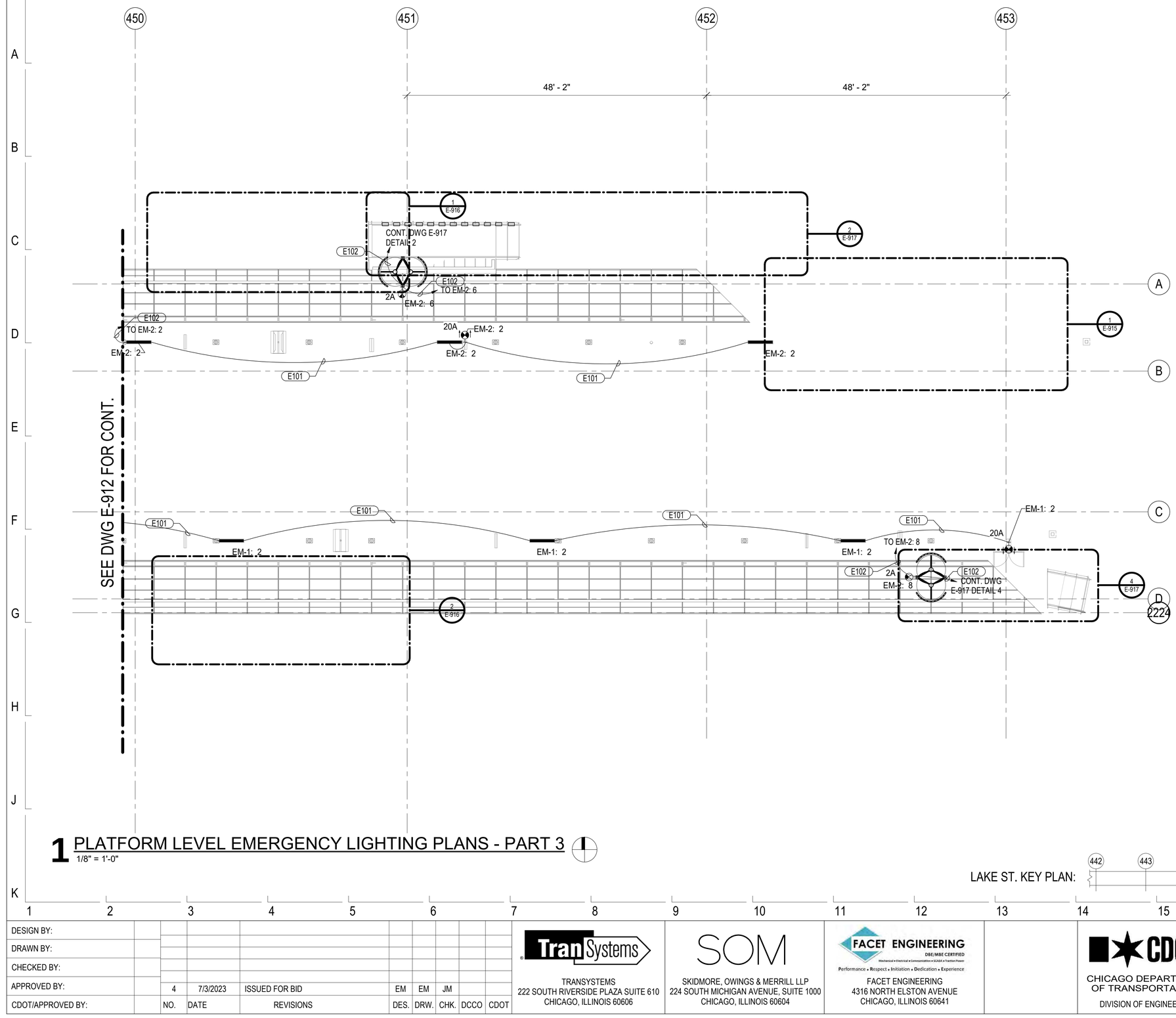

1 PLATFORM LEVEL EMERGENCY LIGHTING PLANS - PART 3

1/8" = 1'-0"

LAKE ST. KEY PLAN:

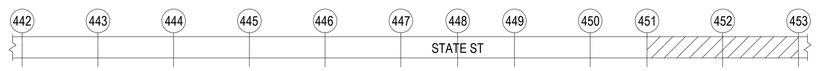

DESIGN BY:										
DRAWN BY:										
CHECKED BY:										
APPROVED BY:		4	7/3/2023	ISSUED FOR BID	EM	EM	JM			
CDOT/APPROVED BY:		NO.	DATE	REVISIONS	DES.	DRW.	CHK.	DCCO	CDOT	

TranSystems
TRANSYSTEMS
222 SOUTH RIVERSIDE PLAZA SUITE 610
CHICAGO, ILLINOIS 60606

SOM
SKIDMORE, OWINGS & MERRILL LLP
224 SOUTH MICHIGAN AVENUE, SUITE 1000
CHICAGO, ILLINOIS 60604

FACET ENGINEERING
DBE/MBE CERTIFIED
Performance • Respect • Initiation • Dedication • Experience
FACET ENGINEERING
4316 NORTH ELSTON AVENUE
CHICAGO, ILLINOIS 60641

CDOT
CHICAGO DEPARTMENT
OF TRANSPORTATION
DIVISION OF ENGINEERING

STATE / LAKE LOOP ELEVATED STATION
200 NORTH STATE STREET, CHICAGO, IL 60601

SPEC. NO.

PLATFORM LEVEL - EMERGENCY LIGHTING PLAN - EAST

DRAWING NO.
E-913

CDOT PROJECT D-1-209

DATE: 9/9/2022

REVISION NO.

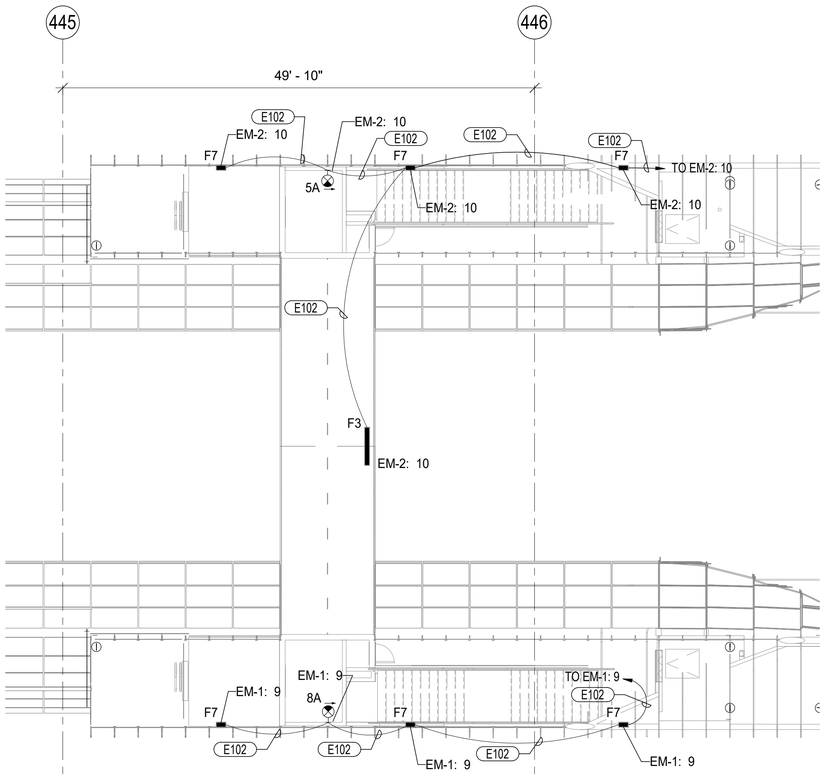

1 FLYOVER LEVEL EMERGENCY LIGHTING PLAN

1/8" = 1'-0"

LAKE ST. KEY PLAN:

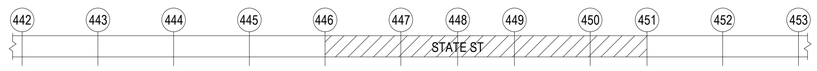

NO.	DATE	REVISIONS	DES.	DRW.	CHK.	DCCO	CDOT
4	7/3/2023	ISSUED FOR BID	EM	EM	JM		

DESIGN BY:
DRAWN BY:
CHECKED BY:
APPROVED BY:
CDOT/APPROVED BY:

TRANSYSTEMS
222 SOUTH RIVERSIDE PLAZA SUITE 610
CHICAGO, ILLINOIS 60606

SKIDMORE, OWINGS & MERRILL LLP
224 SOUTH MICHIGAN AVENUE, SUITE 1000
CHICAGO, ILLINOIS 60604

FACET ENGINEERING
4316 NORTH ELSTON AVENUE
CHICAGO, ILLINOIS 60641

CHICAGO DEPARTMENT OF TRANSPORTATION
DIVISION OF ENGINEERING

STATE / LAKE LOOP ELEVATED STATION
200 NORTH STATE STREET, CHICAGO, IL 60601

FLYOVER LEVEL - EMERGENCY LIGHTING PLAN

CDOT PROJECT D-1-209

DATE: 9/9/2022

SPEC. NO.

DRAWING NO. E-914

REVISION NO.

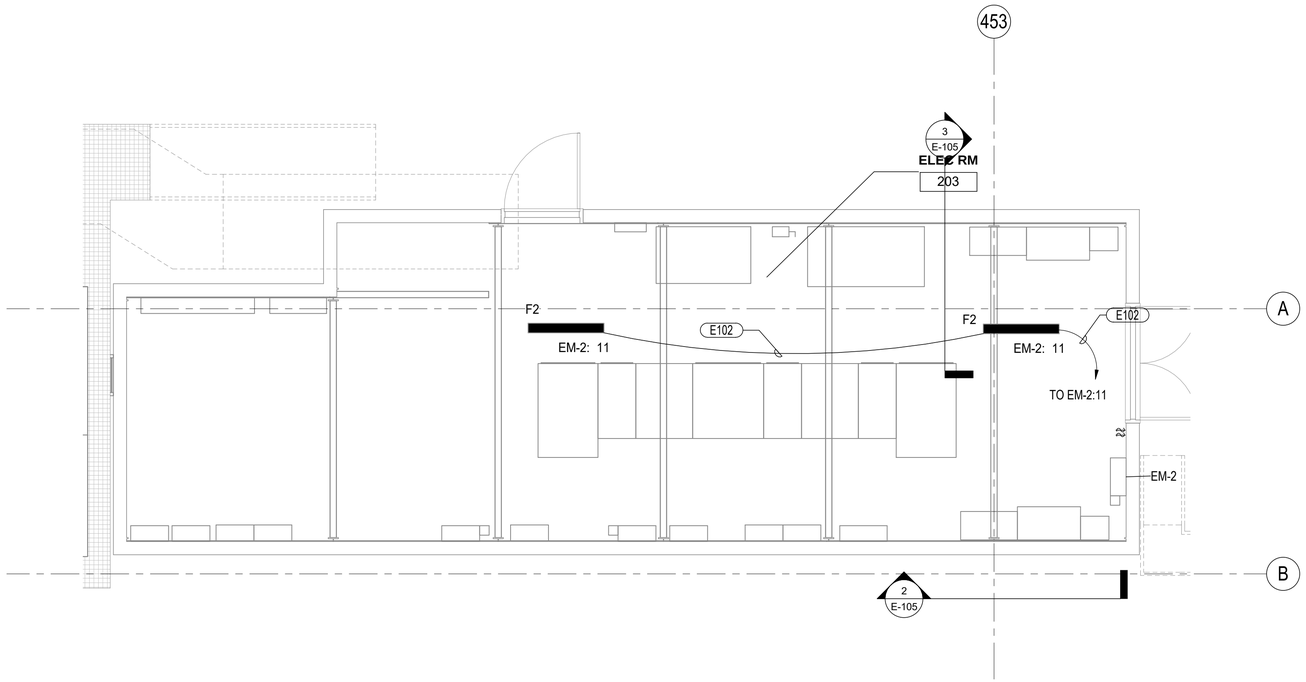

1 ENLARGED MAIN ELECTRICAL ROOM EMERGENCY LIGHTING PLAN

1/4" = 1'-0"

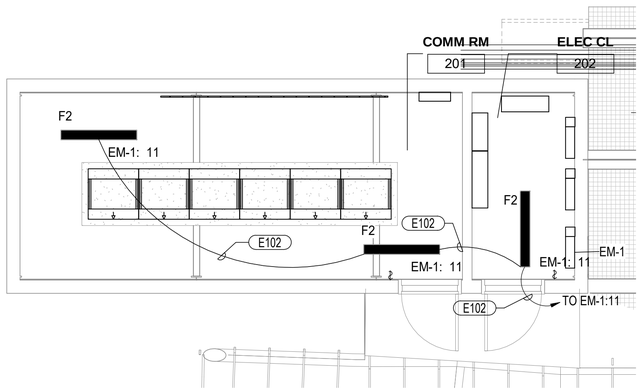

2 ENLARGED ELECTRICAL/COMM ROOM EMERGENCY LIGHTING PLAN

1/4" = 1'-0"

DESIGN BY:									
DRAWN BY:									
CHECKED BY:									
APPROVED BY:		4	7/3/2023	ISSUED FOR BID	EM	EM	JM		
CDOT/APPROVED BY:		NO.	DATE	REVISIONS	DES.	DRW.	CHK.	DCCO	CDOT

TRANSYSTEMS
222 SOUTH RIVERSIDE PLAZA SUITE 610
CHICAGO, ILLINOIS 60606

SKIDMORE, OWINGS & MERRILL LLP
224 SOUTH MICHIGAN AVENUE, SUITE 1000
CHICAGO, ILLINOIS 60604

FACET ENGINEERING
4316 NORTH ELSTON AVENUE
CHICAGO, ILLINOIS 60641

CHICAGO DEPARTMENT OF TRANSPORTATION
DIVISION OF ENGINEERING

STATE / LAKE LOOP ELEVATED STATION
200 NORTH STATE STREET, CHICAGO, IL 60601

ENLARGED PLAN - ELECTRICAL ROOM EMERGENCY LIGHTING

CDOT PROJECT D-1-209

DATE: 9/9/2022

SPEC. NO.

DRAWING NO. E-915

REVISION NO.

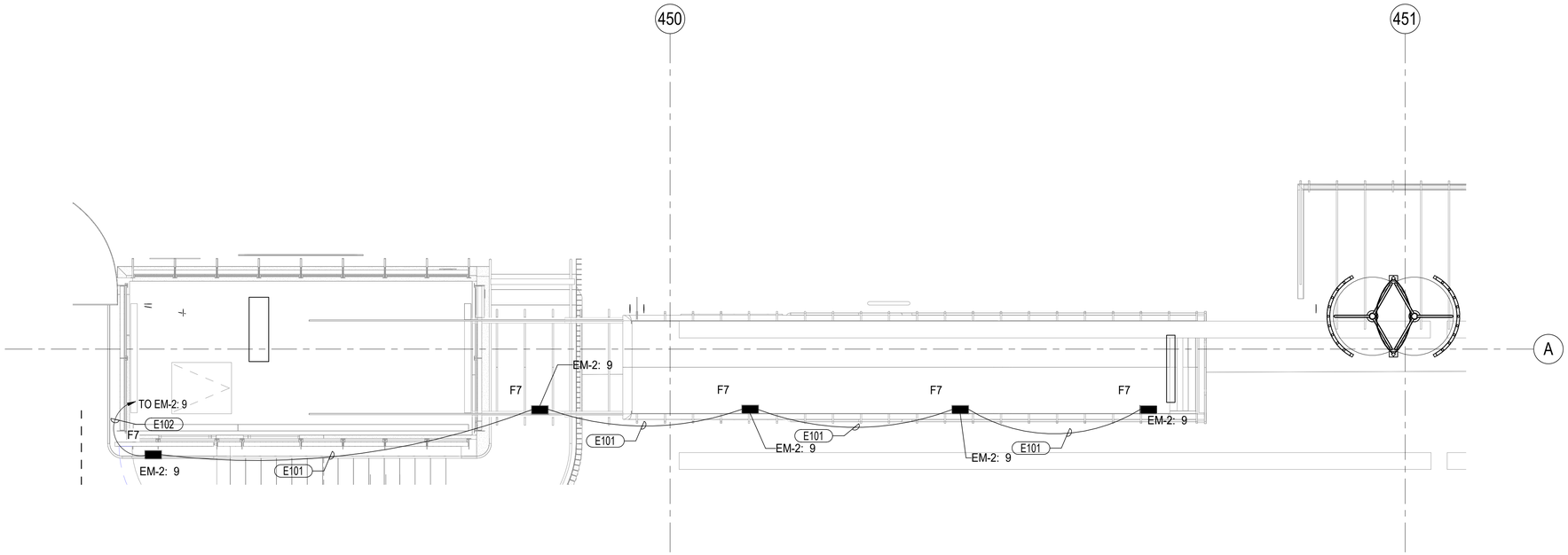

1 NORTH ESCALATOR EMERGENCY LIGHTING PLAN
1/4" = 1'-0"

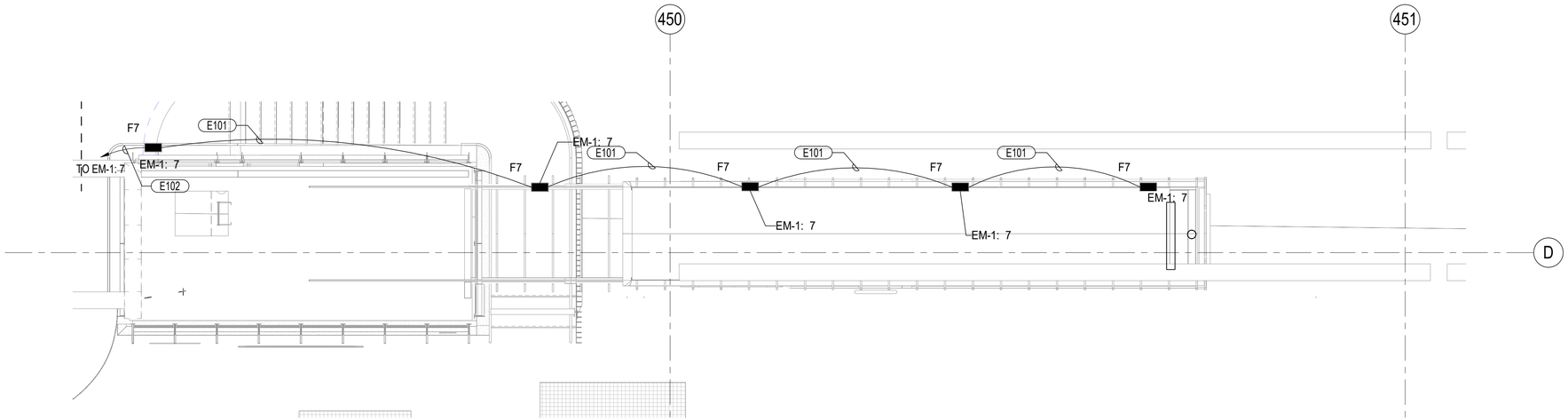

2 SOUTH ESCALATOR EMERGENCY LIGHTING PLAN
1/4" = 1'-0"

DESIGN BY:										
DRAWN BY:										
CHECKED BY:										
APPROVED BY:		4	7/3/2023	ISSUED FOR BID	EM	EM	JM			
CDOT/APPROVED BY:		NO.	DATE	REVISIONS	DES.	DRW.	CHK.	DCCO	CDOT	

TRANSYSTEMS
222 SOUTH RIVERSIDE PLAZA SUITE 610
CHICAGO, ILLINOIS 60606

SKIDMORE, OWINGS & MERRILL LLP
224 SOUTH MICHIGAN AVENUE, SUITE 1000
CHICAGO, ILLINOIS 60604

FACET ENGINEERING
4316 NORTH ELSTON AVENUE
CHICAGO, ILLINOIS 60641

CHICAGO DEPARTMENT OF TRANSPORTATION
DIVISION OF ENGINEERING

STATE / LAKE LOOP ELEVATED STATION
200 NORTH STATE STREET, CHICAGO, IL 60601

SPEC. NO.

ENLARGED PLAN - ESCALATOR EMERGENCY LIGHTING

DRAWING NO. E-916

CDOT PROJECT D-1-209

DATE: 9/9/2022

REVISION NO.

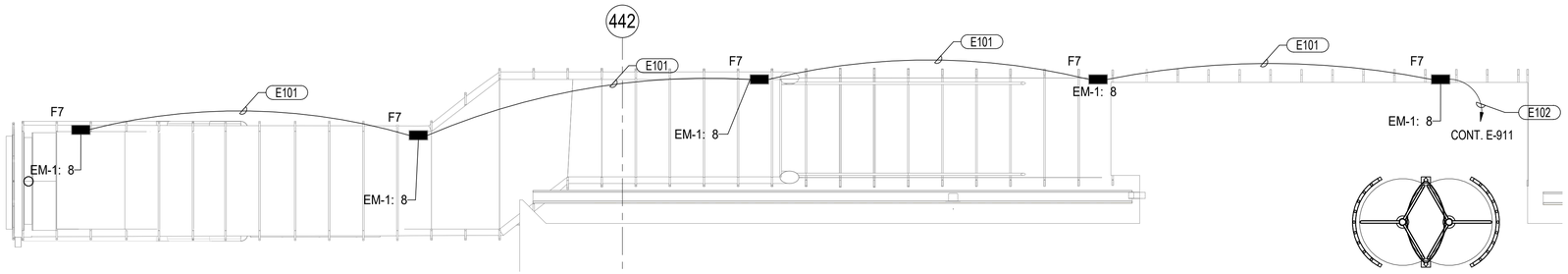

1 NW PLATFORM TO STREET EMERGENCY LIGHTING
1/4" = 1'-0"

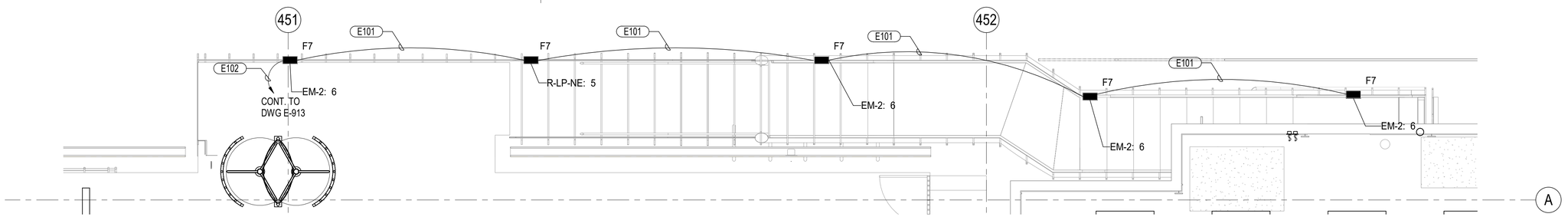

2 NE PLATFORM TO STREET STAIR EMERGENCY LIGHTING
1/4" = 1'-0"

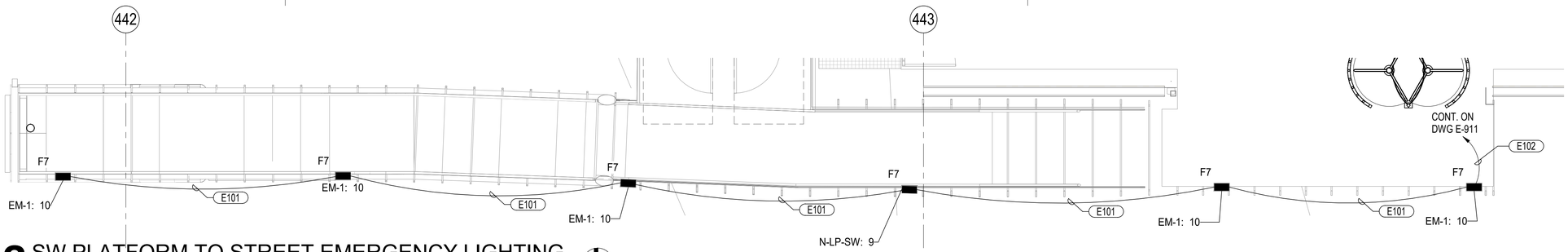

3 SW PLATFORM TO STREET EMERGENCY LIGHTING
1/4" = 1'-0"

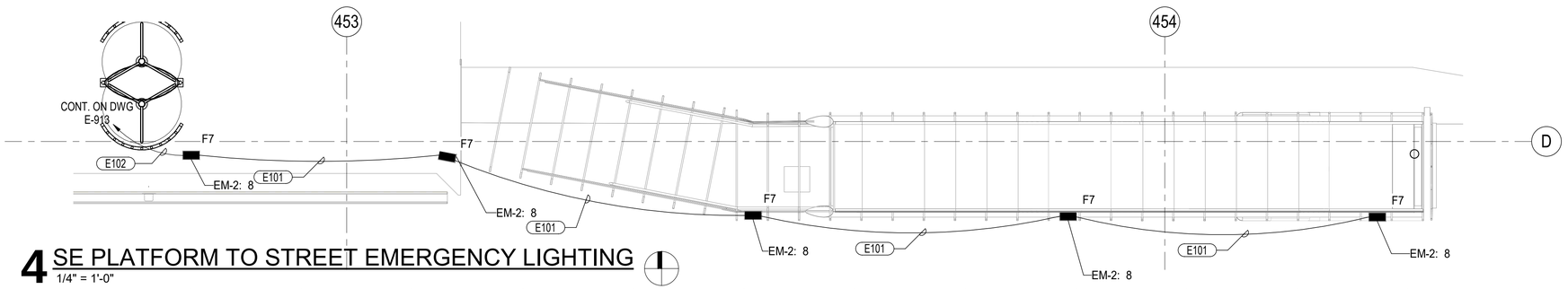

4 SE PLATFORM TO STREET EMERGENCY LIGHTING
1/4" = 1'-0"

1 2 3 4 5 6 7 8 9 10 11 12 13 14 15 16 17 18 19 20

DESIGN BY:									
DRAWN BY:									
CHECKED BY:									
APPROVED BY:		4	7/3/2023	ISSUED FOR BID	EM	EM	JM		
CDOT/APPROVED BY:		NO.	DATE	REVISIONS	DES.	DRW.	CHK.	DCCO	CDOT

TRANSYSTEMS
222 SOUTH RIVERSIDE PLAZA SUITE 610
CHICAGO, ILLINOIS 60606

SKIDMORE, OWINGS & MERRILL LLP
224 SOUTH MICHIGAN AVENUE, SUITE 1000
CHICAGO, ILLINOIS 60604

FACET ENGINEERING
4316 NORTH ELSTON AVENUE
CHICAGO, ILLINOIS 60641

CHICAGO DEPARTMENT
OF TRANSPORTATION
DIVISION OF ENGINEERING

STATE / LAKE LOOP ELEVATED STATION
200 NORTH STATE STREET, CHICAGO, IL 60601

ENLARGED PLAN - PLATFORM TO STREET STAIR EMERGENCY LIGHTING

CDOT PROJECT D-1-209

DATE: 9/9/2022

SPEC. NO.

DRAWING NO. E-917

REVISION NO.

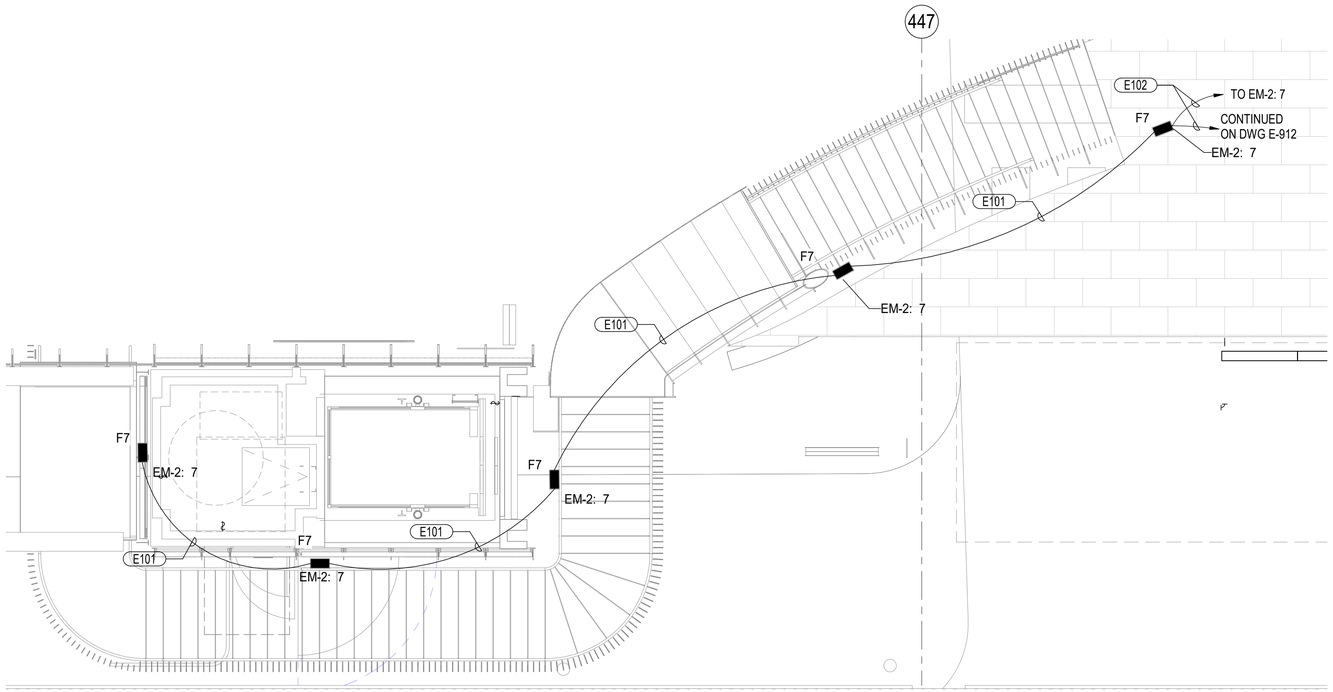

1 NW CENTER STAIR EMERGENCY LIGHTING

1/4" = 1'-0"

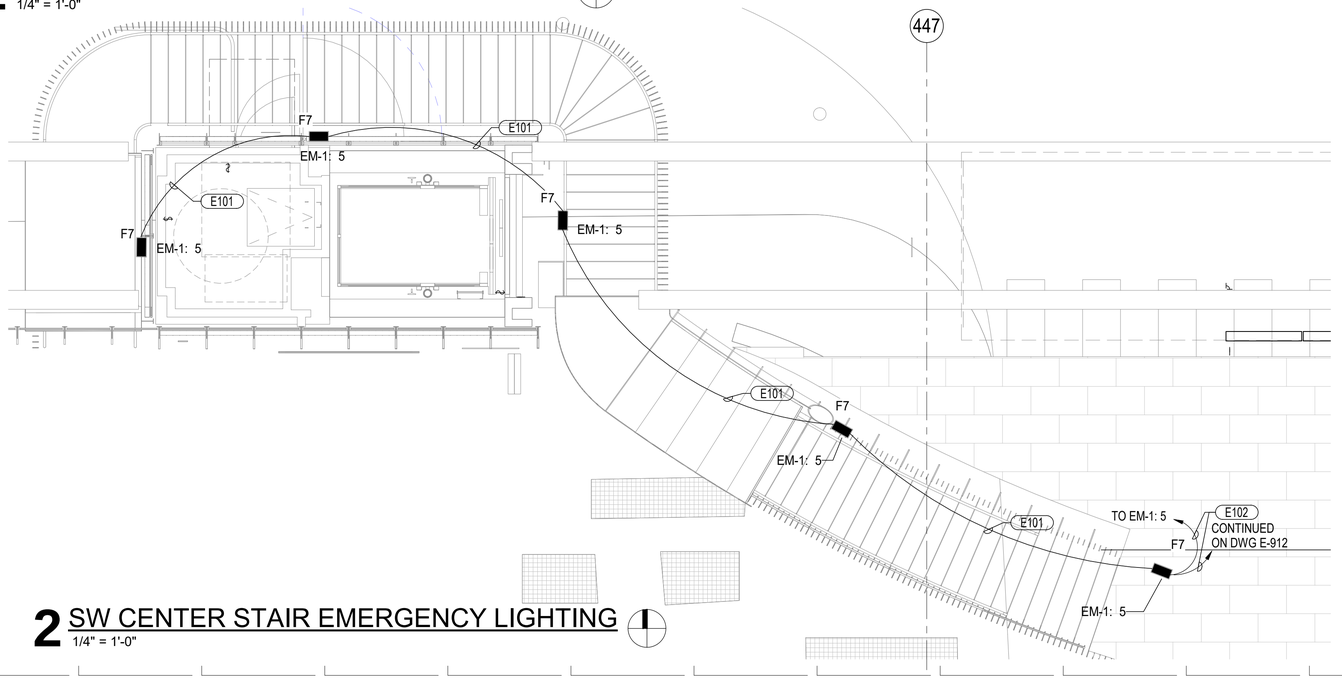

2 SW CENTER STAIR EMERGENCY LIGHTING

1/4" = 1'-0"

DESIGN BY:									
DRAWN BY:									
CHECKED BY:									
APPROVED BY:		4	7/3/2023	ISSUED FOR BID	EM	EM	JM		
CDOT/APPROVED BY:		NO.	DATE	REVISIONS	DES.	DRW.	CHK.	DCCO	CDOT

TRANSYSTEMS
222 SOUTH RIVERSIDE PLAZA SUITE 610
CHICAGO, ILLINOIS 60606

SKIDMORE, OWINGS & MERRILL LLP
224 SOUTH MICHIGAN AVENUE, SUITE 1000
CHICAGO, ILLINOIS 60604

FACET ENGINEERING
4316 NORTH ELSTON AVENUE
CHICAGO, ILLINOIS 60641

CHICAGO DEPARTMENT OF TRANSPORTATION
DIVISION OF ENGINEERING

STATE / LAKE LOOP ELEVATED STATION
200 NORTH STATE STREET, CHICAGO, IL 60601

ENLARGED PLAN - WEST CENTER STAIR EMERGENCY LIGHTING

CDOT PROJECT D-1-209

DATE: 9/9/2022

SPEC. NO.

DRAWING NO. E-918

REVISION NO.

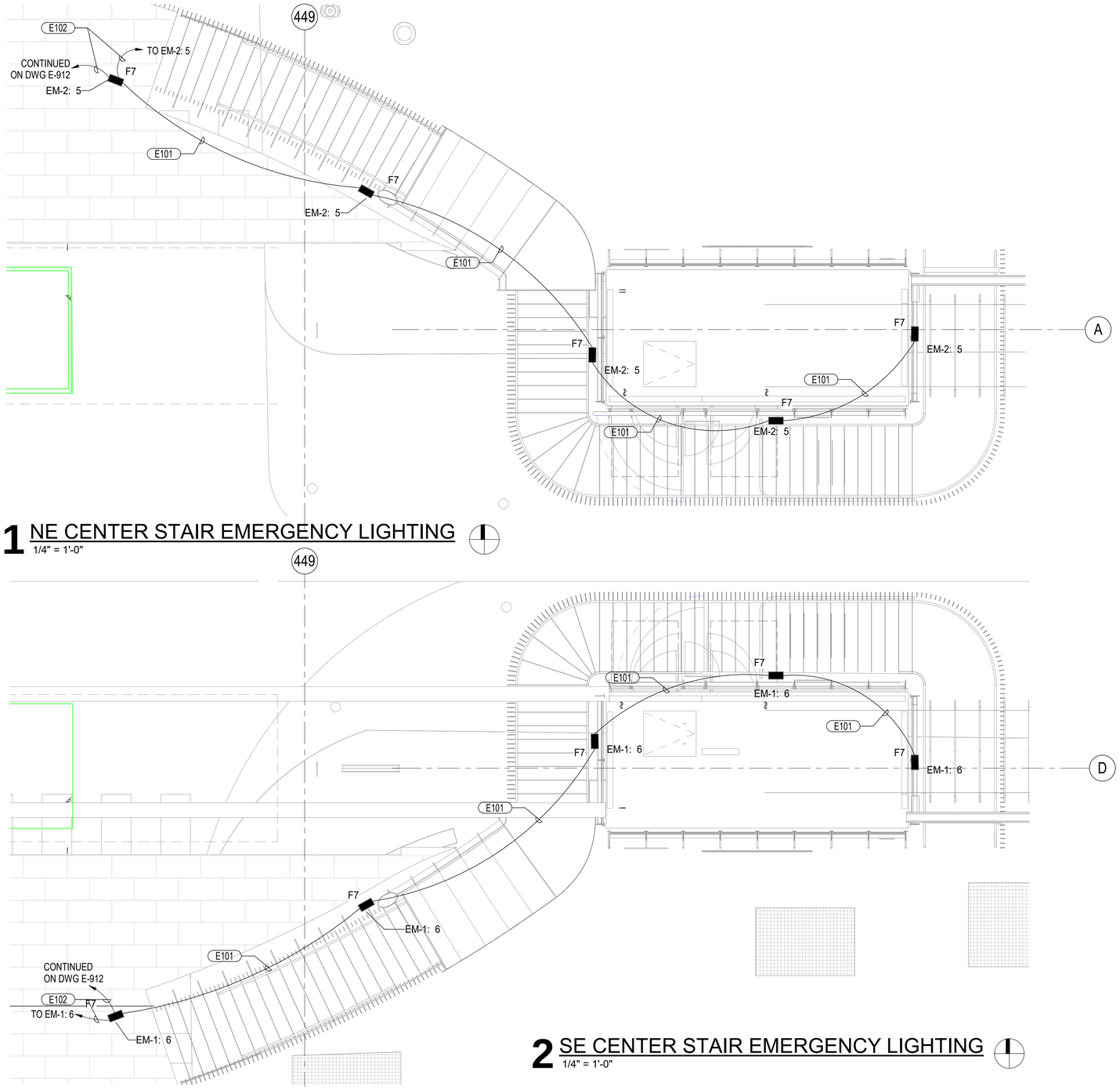

1 NE CENTER STAIR EMERGENCY LIGHTING
1/4" = 1'-0"

2 SE CENTER STAIR EMERGENCY LIGHTING
1/4" = 1'-0"

DESIGN BY:									
DRAWN BY:									
CHECKED BY:									
APPROVED BY:		4	7/3/2023	ISSUED FOR BID	EM	EM	JM		
CDOT/APPROVED BY:		NO.	DATE	REVISIONS	DES.	DRW.	CHK.	DCCO	CDOT

TRANSYSTEMS
222 SOUTH RIVERSIDE PLAZA SUITE 610
CHICAGO, ILLINOIS 60606

SKIDMORE, OWINGS & MERRILL LLP
224 SOUTH MICHIGAN AVENUE, SUITE 1000
CHICAGO, ILLINOIS 60604

FACET ENGINEERING
4316 NORTH ELSTON AVENUE
CHICAGO, ILLINOIS 60641

CHICAGO DEPARTMENT OF TRANSPORTATION
DIVISION OF ENGINEERING

STATE / LAKE LOOP ELEVATED STATION
200 NORTH STATE STREET, CHICAGO, IL 60601

ENLARGED PLAN -EAST CENTER STAIR EMERGENCY LIGHTING

CDOT PROJECT D-1-209 | DATE: 9/9/2022

SPEC. NO.

DRAWING NO. E-919

REVISION NO.

GENERAL NOTE: Electrical contractor or lighting manufacturer to provide a Professional Engineering Seal to the final specialty lighting system selection and corresponding shop drawings submitted. Three manufacturers provided in specialty lighting documentation.

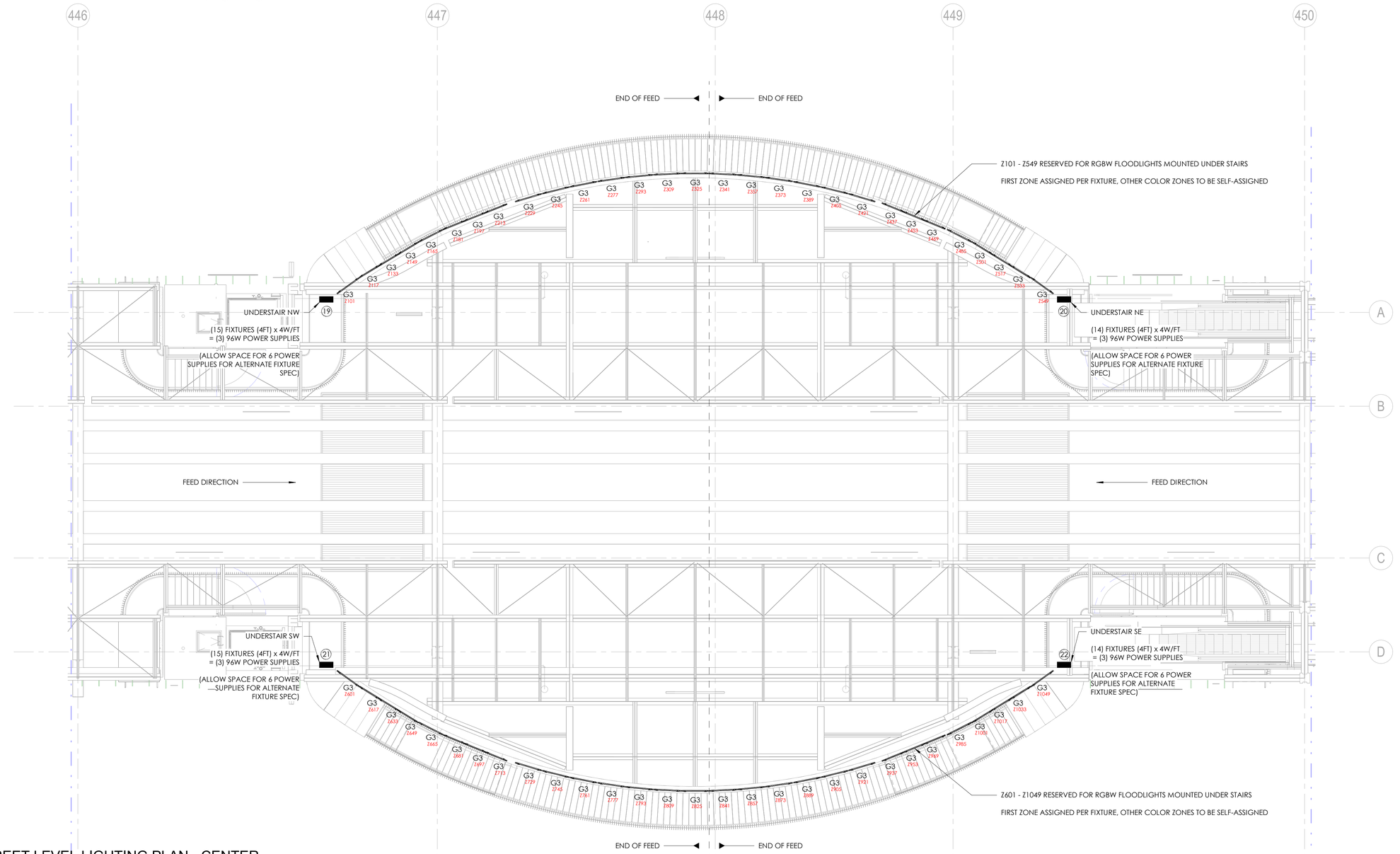

STREET LEVEL LIGHTING PLAN - CENTER

LAKE ST. KEY PLAN:

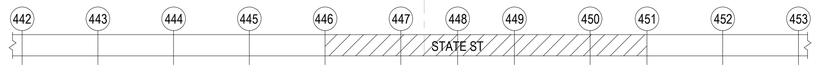

DESIGN BY:										
DRAWN BY:		4	7/3/2023	ISSUED FOR BID						
CHECKED BY:										
APPROVED BY:		0	9/9/2022	ISSUED FOR PERMIT						
CDOT/APPROVED BY:		NO.	DATE	REVISIONS	DES.	DRW.	CHK.	DCCO	CDOT	

TRANSYSTEMS
222 SOUTH RIVERSIDE PLAZA SUITE 610
CHICAGO, ILLINOIS 60606

SKIDMORE, OWINGS & MERRILL LLP
224 SOUTH MICHIGAN AVENUE, SUITE 1000
CHICAGO, ILLINOIS 60604

CHICAGO DEPARTMENT OF TRANSPORTATION
DIVISION OF ENGINEERING

STATE / LAKE LOOP ELEVATED STATION
200 NORTH STATE STREET, CHICAGO, IL 60601

STREET LEVEL LIGHTING PLAN - CENTER

CDOT PROJECT D-1-209

DATE: 9/9/2022

SPEC. NO.

DRAWING NO. SL-102

REVISION NO.

GENERAL NOTE: Electrical contractor or lighting manufacturer to provide a Professional Engineering Seal to the final specialty lighting system selection and corresponding shop drawings submitted.
Three manufacturers provided in specialty lighting documentation.

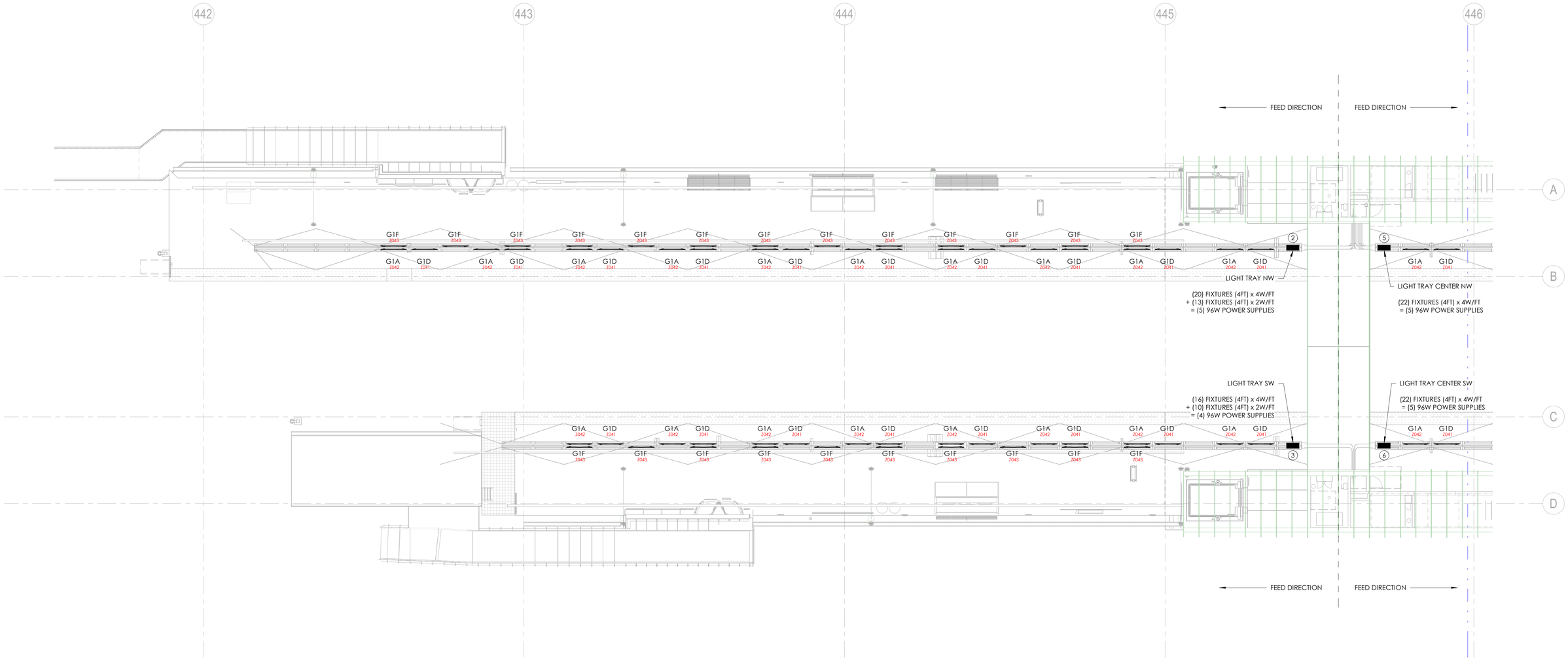

PLATFORM LEVEL LIGHTING PLAN - WEST

LAKE ST. KEY PLAN:

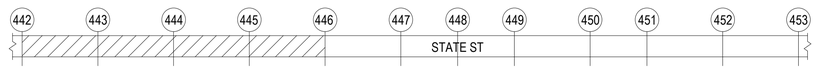

DESIGN BY:									
DRAWN BY:		4	7/3/2023	ISSUED FOR BID					
CHECKED BY:									
APPROVED BY:		0	9/9/2022	ISSUED FOR PERMIT					
CDOT/APPROVED BY:		NO.	DATE	REVISIONS	DES.	DRW.	CHK.	DCCO	CDOT

TRANSYSTEMS
222 SOUTH RIVERSIDE PLAZA SUITE 610
CHICAGO, ILLINOIS 60606

SKIDMORE, OWINGS & MERRILL LLP
224 SOUTH MICHIGAN AVENUE, SUITE 1000
CHICAGO, ILLINOIS 60604

CHICAGO DEPARTMENT
OF TRANSPORTATION
DIVISION OF ENGINEERING

STATE / LAKE LOOP ELEVATED STATION
200 NORTH STATE STREET, CHICAGO, IL 60601

PLATFORM LEVEL LIGHTING PLAN - WEST

CDOT PROJECT D-1-209

DATE: 9/9/2022

SPEC. NO.

DRAWING NO.
SL-104

REVISION NO.

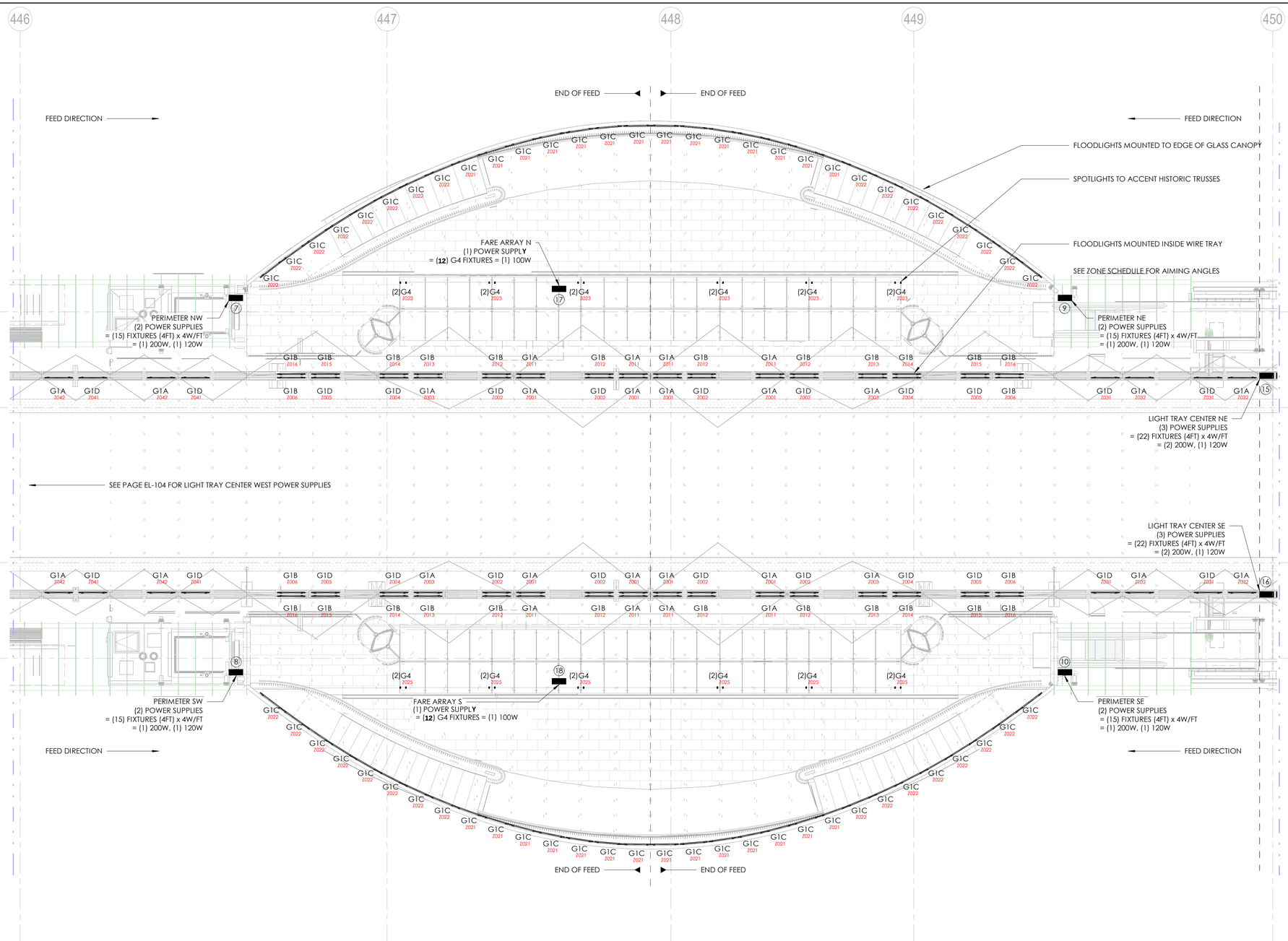

PLATFORM LEVEL LIGHTING PLAN - CENTER

LAKE ST. KEY PLAN:

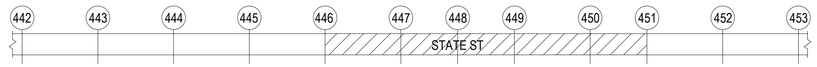

DESIGN BY:										
DRAWN BY:										
CHECKED BY:										
APPROVED BY:				100% QA SUBMITTAL						
CDOT/APPROVED BY:		NO.	DATE	REVISIONS	DES.	DRW.	CHK.	DCCO	CDOT	

TRANSYSTEMS
222 SOUTH RIVERSIDE PLAZA SUITE 610
CHICAGO, ILLINOIS 60606

SKIDMORE, OWINGS & MERRILL LLP
224 SOUTH MICHIGAN AVENUE, SUITE 1000
CHICAGO, ILLINOIS 60604

GWEN GROSSMAN lighting design

CHICAGO DEPARTMENT OF TRANSPORTATION
DIVISION OF ENGINEERING

STATE / LAKE LOOP ELEVATED STATION
200 NORTH STATE STREET, CHICAGO, IL 60601

PLATFORM LEVEL LIGHTING PLAN - CENTER

CDOT PROJECT D-1-209

DATE: 5/9/2022

SPEC. NO.

DRAWING NO.
SL-105

REVISION NO.

GENERAL NOTE: Electrical contractor or lighting manufacturer to provide a Professional Engineering Seal to the final specialty lighting system selection and corresponding shop drawings submitted.
Three manufacturers provided in specialty lighting documentation.

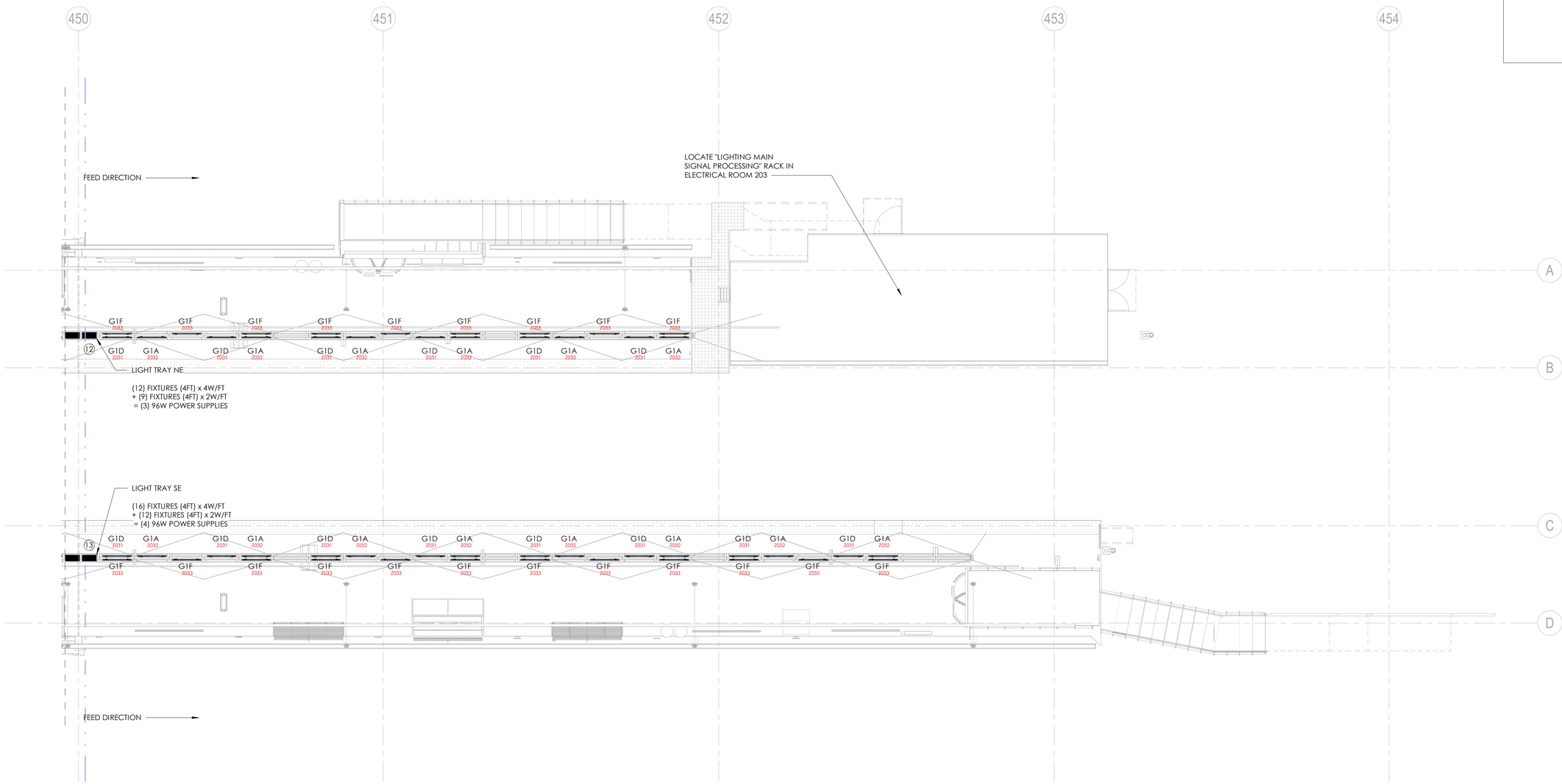

PLATFORM LEVEL LIGHTING PLAN - EAST

LAKE ST. KEY PLAN:

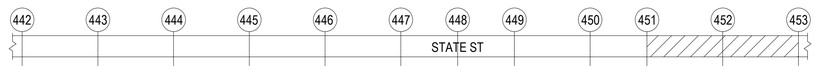

DESIGN BY:										
DRAWN BY:		4	7/3/2023	ISSUED FOR BID						
CHECKED BY:										
APPROVED BY:		0	9/9/2022	ISSUED FOR PERMIT						
CDOT/APPROVED BY:		NO.	DATE	REVISIONS	DES.	DRW.	CHK.	DCCO	CDOT	

TRANSYSTEMS
222 SOUTH RIVERSIDE PLAZA SUITE 610
CHICAGO, ILLINOIS 60606

SKIDMORE, OWINGS & MERRILL LLP
224 SOUTH MICHIGAN AVENUE, SUITE 1000
CHICAGO, ILLINOIS 60604

CHICAGO DEPARTMENT OF TRANSPORTATION
DIVISION OF ENGINEERING

STATE / LAKE LOOP ELEVATED STATION
200 NORTH STATE STREET, CHICAGO, IL 60601

PLATFORM LEVEL LIGHTING PLAN - EAST

CDOT PROJECT D-1-209

DATE: 9/9/2022

SPEC. NO.

DRAWING NO. SL-106

REVISION NO.

GGLD
GWEN GROSSMAN
lighting design

FIXTURE SCHEDULE
STATE / LAKE LOOP ELEVATED STATION
CHICAGO, IL

TYPE	MANUFACTURER	CATALOG NO.	CCT	DESCRIPTION	DRIVER	INPUT WATT	UNITS	REMARKS
G1A	LUMENPULSE	LOGN-4W-48V-48-35K-30X90-CL-UMASN-SI-UTCL-CRC-UL	3500K LED	SURFACE MOUNT 48" ADJUSTABLE LED LINEAR WITH 30X90 DEG OPTICS, 425 LUMENS/FT DELIVERED, 80CRI, ALUMINUM HOUSING, STAINLESS STEEL HARDWARE, SILVER FINISH, IP66 RATING, IK09 IMPACT RATING, 3G VIBRATION RATING, MIMINAL BRACKET AS REQUIRED TO SURFACE MOUNT, 48VDC WITH UNIVERSAL VOLTAGE REMOTE DIMMABLE DMX DRIVER	DMX	4	W/FT	NOTE 1 & 2
G1A- ALT1	INSIGHT	MER-LO-35K-40X90-SM-48-DMX-AA-C-CRF / CDS-RDM	3500K LED		DMX	3.5	W/FT	NOTE 1 & 2
G1 A- ALT2	ECOSENSE LIGHTING	L50-E-48-04-35-80-MULT-40X90 -MNT-L-FAB-MOD DMX DIM	3500K LED		DMX	4	W/FT	NOTE 1 &2, PROVIDE DMX/RDM REMOTE DRIVER CONVERTER
G1B	LUMENPULSE	LOGN-4W-48V-48-35K-90X90-CL-UMASN-SI-UTCL-CRC-UL	3500K LED	SURFACE MOUNT 48" ADJUSTABLE LED LINEAR WITH 90X90 DEG OPTICS, 420 LUMENS/FT DELIVERED, 80CRI, ALUMINUM HOUSING, STAINLESS STEEL HARDWARE, SILVER FINISH, IP66 RATING, IK09 IMPACT RATING, 3G VIBRATION RATING, MIMINAL BRACKET AS REQUIRED TO SURFACE MOUNT, 48VDC WITH UNIVERSAL VOLTAGE REMOTE DIMMABLE DMX DRIVER	DMX	4	W/FT	NOTE 1 & 2
G1 B- ALT1	INSIGHT	MER-LO-35K-80X80-SM-48-DMX-AA-C-CRF / CDS-RDM	3500K LED		DMX	3.5	W/FT	NOTE 1 & 2
G1B- ALT2	ECOSENSE LIGHTING	L50-E-48-04-35-80-MULT-70X70 -MNT-L-FAB-MOD DMX DIM	3500K LED		DMX	4	W/FT	NOTE 1 &2, PROVIDE DMX/RDM REMOTE DRIVER CONVERTER
G1C	LUMENPULSE	LOGN-4W-48V-48-35K-30X60-CL-UMASN-SI-UTCL-CRC-LOGRND	3500K LED	SURFACE MOUNT 48" ADJUSTABLE LED LINEAR WITH ASYMMETRIC (30X60DEG) OPTICS, 360 LUMENS/FT, DELIVERED WITH LOUVER, 80CRI, ALUMINUM HOUSING, STAINLESS STEEL HARDWARE, SILVER FINISH, IP66 RATING, IK09 IMPACT RATING, 3G VIBRATION RATING, MIMINAL BRACKET AS REQUIRED TO SURFACE MOUNT, 48VDC WITH UNIVERSAL VOLTAGE REMOTE DIMMABLE DMX DRIVER	DMX	4	W/FT	NOTE 1 & 2, INTERNAL OR EXTERNAL LOUVER REQUIRED
G1C-ALT1	INSIGHT	MER-LO-35K-AI-SM-48-DMX-AA-VS-C-CRF / CDS-RDM	3500K LED		DMX	3.5	W/FT	NOTE 1 & 2, INTERNAL OR EXTERNAL LOUVER REQUIRED
G1C-ALT2	ECOSENSE LIGHTING	L50-E-48-04-35-80-MULT-ASYM-LV50-48-ASYM-48- MNT-L-FAB- MOD DMX DIM	3500K LED		DMX	4	W/FT	NOTE 1 & 2, PROVIDE DMX/RDM REMOTE DRIVER CONVERTER, INTERNAL OR EXTERNAL LOUVER REQUIRED
G1D	LUMENPULSE	LOGN-4W-48V-48-35K-60X90-CL-UMASN-SI-UTCL-CRC-UL	3500K LED	SURFACE MOUNT 48" ADJUSTABLE LED LINEAR WITH 60X90 DEG OPTICS, 430 LUMENS/FT, DELIVERED, 80CRI, ALUMINUM HOUSING, STAINLESS STEEL HARDWARE, SILVER FINISH, IP66 RATING, IK09 IMPACT RATING, 3G VIBRATION RATING, MIMINAL BRACKET AS REQUIRED TO SURFACE MOUNT, 48VDC WITH UNIVERSAL VOLTAGE REMOTE DIMMABLE DMX DRIVER	DMX	4	W/FT	NOTE 1 & 2
G1D-ALT1	INSIGHT	MER-LO-35K-60X60-SM-48-DMX-AA-VS-C-CRF / CDS-RDM	3500K LED		DMX	3.5	W/FT	NOTE 1 & 2
G1D-ALT2	ECOSENSE LIGHTING	L50-E-48-04-35-80-MULT-70X70 -MNT-L-FAB - MOD DMX DIM	3500K LED		DMX	4	W/FT	NOTE 1 &2, PROVIDE DMX/RDM REMOTE DRIVER CONVERTER
G1F	LUMENPULSE	LOGN-2W-48V-48-35K-90X90-CL-UMASN-SI-UTCL-CRC-UL	3500K LED	SURFACE MOUNT 48" ADJUSTABLE LED LINEAR WITH 90X90 DEG OPTICS, 200 LUMENS/FT, DELIVERED, 80CRI, ALUMINUM HOUSING, STAINLESS STEEL HARDWARE, SILVER FINISH, IP66 RATING, IK09 IMPACT RATING, 3G VIBRATION RATING, MIMINAL BRACKET AS REQUIRED TO SURFACE MOUNT, 48VDC WITH UNIVERSAL VOLTAGE REMOTE DIMMABLE DMX DRIVER	DMX	2	W/FT	NOTE 1 & 2
G1F-ALT1	INSIGHT	MER-MOD 2W/FT-35K-90X90-SM-48-DMX-AA-C-CRF / CDS-RDM	3500K LED		DMX	2	W/FT	NOTE 1 & 2
G1F-ALT2	ECOSENSE LIGHTING	L50-E-48-02-35-80-MULT-ASYM- MNT-L-FAB-MOD DMX DIM	3500K LED		DMX	2	W/FT	NOTE 1 &2, PROVIDE DMX/RDM REMOTE DRIVER CONVERTER
G1G	OMITTED							
G2	OMITTED							
G3	LUMENPULSE	LOGN-4W-48V-48-RGBW(35K)-90x90-UASMN-SI-UCTL-SCR-UL-LOGRND	RGBW LED	SURFACE MOUNT COLOR CHANGING 48" ADJUSTABLE LED LINEAR WITH 90X90 DEG OPTICS, 210 LUMENS/FT, DELIVERED WITH LOUVER - ALL COLORS, 80CRI, RED/BLUE/GREEN/WHITE 3500K, ALUMINUM HOUSING, STAINLESS STEEL HARDWARE, SILVER FINISH, IP66 RATING, IK09 IMPACT RATING, 3G VIBRATION RATING, MIMINAL BRACKET AS REQUIRED TO SURFACE MOUNT, 48VDC WITH UNIVERSAL VOLTAGE REMOTE DIMMABLE DMX DRIVER	DMX	4	W/FT	NOTE 1,2 & 3, INTERNAL LOUVER IF AVAILABLE
G3-ALT1	INSIGHT	MER-MO-RGBWq(MOD.35K)-80X80-SM-48-DMXFT -AA-C-CRF / CDS-RDM	RGBW LED		DMX	9	W/FT	NOTE 1,2 & 3 INTERNAL LOUVER IF AVAILABLE
G3-ALT2	ACCLAIM	AGD-241-DKL(35K)-N / REMOTE DMX/RDM DRIVERS	RGBW LED		DMX	9	W/FT	NOTE 1,2 &3, INTERNAL LOUVER IF AVAILABLE
G4	DESIGNPLAN	GN200-2-0-35K-T[11DEG]-H-X / WB8012-H/ REMOTE 24VDC-DMX/RDM DRIVER	3500K LED	SURFACE MOUNT LED ADJUSTABLE ACCENT, ALUMINUM ALLOY CONSTRUCTION, 10DEG OPTICS, 463 LUMENS DELIVERED, 80CRI, 24V DC, APPROX. 2" DIAM. X 4.21" LENGTH, SNOOT, IP66 RATING, IK07 MIN. RATING, 3G RATINGS, REMOTE UNIVERSAL VOLTAGE - DIM-TO-DARK DMX DRIVER (MINIMIZE NUMBER OF DRIVERS PER LAYOUT), SILVER FINISH TO BE VERIFIED BY ARCHITECT	DMX	7	W	NOTE 4
G4-ALT1	TARGETTI	BLT-RP-FE-L1-NX-35-REMOTE DMX/RDM DRIVER	3500K LED		DMX	10	W	NOTE 4
G4-ALT2	ECOSENSE LIGHTING	F080-1R-XX-35-80-10-S-F-X / REMOTE DMX/RDM CONVERTER	3500K LED		DMX	7.5	W	NOTE 4
G5	OMITTED							

Schedule Notes

1. PROVIDE RDM (REMOTE ADDRESSABLE) DIMMABLE DMX DRIVER TO MAXIMIZE CABLE AND SIGNAL DISTANCES. FIXTURE SAMPLE REQUIRED FOR MOCKUP BY LIGHT TRAY MANUFACTURER (OR STRUCTURAL MOUNTING) TO COORDINATE FIXTURE LENGTHS, MOUNTING HARDWARE AND MOUNTING DETAILS. ONE FIXTURE PER BEAMSPREAD SPECIFICATION. CONTRACTOR TO SUPPLY JUMPER CABLES AS REQUIRED, SEE WIRING DIAGRAM FOR OVERALL DMX SYSTEM WIRING.
2. SEE ARCHITECTURAL DETAIL FOR BRACKET REQUIRED BY LOCATION. PROVIDE BRACKET MOUNTING HARDWARE FOR MOUNTING MOCKUP PER TYPICAL LOCATION.
3. PROVIDE 3500K AS WHITE WITHIN RGBW SPECIFICATION. DMX RESOLUTION TO BE 1FT INCREMENTS BY COLOR (EX. 4FT RGBW = 16 CHANNELS)
4. PROVIDE SAMPLE FOR MOCKUP WITH LENS OPTIONS AND MOUNTING BRACKE T OPTIONS.

General Notes

A. See Fixture Cut Sheet for fixture size information
B. Contractor to provide all parts, cables (leads and jumpers) and mounting hardware as necessary for a complete wet location installation.
C. Contractor to provide attic stock of fixtures and drivers in quantity of 10% of fixture quantity or no less than (2) each.
D. Architect to approve all fixture mounting hardware and finishes.

DESIGN BY:									
DRAWN BY:									
CHECKED BY:									
APPROVED BY:				100% QA SUBMITTAL					
CDOT/APPROVED BY:		NO.	DATE	REVISIONS	DES.	DRW.	CHK.	DCCO	CDOT

TRANSYSTEMS
222 SOUTH RIVERSIDE PLAZA SUITE 610
CHICAGO, ILLINOIS 60606

SKIDMORE, OWINGS & MERRILL LLP
224 SOUTH MICHIGAN AVENUE, SUITE 1000
CHICAGO, ILLINOIS 60604

GWEN GROSSMAN lighting design

CHICAGO DEPARTMENT OF TRANSPORTATION
DIVISION OF ENGINEERING

STATE / LAKE LOOP ELEVATED STATION
200 NORTH STATE STREET, CHICAGO, IL 60601

LIGHTING FIXTURE SCHEDULE

CDOT PROJECT D-1-209

DATE: 5/9/2022

SPEC. NO.

DRAWING NO. SL-601

REVISION NO.

ZONE SCHEDULE
STATE/ LAKE LOOP ELEVATED STATION
CHICAGO, IL

ZONE NO.	ZONE DESCRIPTION	FIXTURE TYPE	FIXTURE DESCRIPTION	DRIVER	INPUT WATTAGE	FIXTURE QTY	TOTAL LOAD	AIMING ANGLE*
STATION HOUSE - LIGHTTRAY - CENTER - ZONES 2001-2010								
Z001	STATION HOUSE-LIGHTRAY - CENTER INNER	G1A	SURFACE MOUNT 48" ADJUSTABLE LED LINEAR WITH 30X90 DEG OPTICS	DMX	4.0 w/ft	8	128.0 w	170deg from NADIR
Z002	STATION HOUSE-LIGHTRAY - CENTER INNER	G1D	SURFACE MOUNT 48" ADJUSTABLE LED LINEAR WITH 60X90 DEG OPTICS	DMX	4.0 w/ft	8	128.0 w	125deg from NADIR
Z003	STATION HOUSE-LIGHTRAY - CENTER INNER	G1A	SURFACE MOUNT 48" ADJUSTABLE LED LINEAR WITH 30X90 DEG OPTICS	DMX	4.0 w/ft	4	64.0 w	170deg from NADIR
Z004	STATION HOUSE-LIGHTRAY - CENTER INNER	G1D	SURFACE MOUNT 48" ADJUSTABLE LED LINEAR WITH 60X90 DEG OPTICS	DMX	4.0 w/ft	4	64.0 w	125deg from NADIR
Z005	STATION HOUSE-LIGHTRAY - CENTER INNER	G1D	SURFACE MOUNT 48" ADJUSTABLE LED LINEAR WITH 30X90 DEG OPTICS	DMX	4.0 w/ft	4	64.0 w	170deg from NADIR
Z006	STATION HOUSE-LIGHTRAY - CENTER INNER	G1B	SURFACE MOUNT 48" ADJUSTABLE LED LINEAR WITH 90X90 DEG OPTICS	DMX	4.0 w/ft	4	64.0 w	160deg from NADIR
						TOTAL LOAD	512.0 w	
STATION HOUSE - LIGHTTRAY - CENTER - ZONES 2011-2020								
Z011	STATION HOUSE-LIGHTRAY - CENTER OUTER	G1A	SURFACE MOUNT 48" ADJUSTABLE LED LINEAR WITH 30X90 DEG OPTICS	DMX	4.0 w/ft	8	128.0 w	150deg from NADIR
Z012	STATION HOUSE-LIGHTRAY - CENTER OUTER	G1B	SURFACE MOUNT 48" ADJUSTABLE LED LINEAR WITH 90X90 DEG OPTICS	DMX	4.0 w/ft	8	128.0 w	120deg from NADIR
Z013	STATION HOUSE-LIGHTRAY - CENTER OUTER	G1B	SURFACE MOUNT 48" ADJUSTABLE LED LINEAR WITH 90X90 DEG OPTICS	DMX	4.0 w/ft	4	64.0 w	150deg from NADIR
Z014	STATION HOUSE-LIGHTRAY - CENTER OUTER	G1B	SURFACE MOUNT 48" ADJUSTABLE LED LINEAR WITH 90X90 DEG OPTICS	DMX	4.0 w/ft	4	64.0 w	120deg from NADIR
Z015	STATION HOUSE-LIGHTRAY - CENTER OUTER	G1B	SURFACE MOUNT 48" ADJUSTABLE LED LINEAR WITH 90X90 DEG OPTICS	DMX	4.0 w/ft	4	64.0 w	150deg from NADIR
Z016	STATION HOUSE-LIGHTRAY - CENTER OUTER	G1B	SURFACE MOUNT 48" ADJUSTABLE LED LINEAR WITH 90X90 DEG OPTICS	DMX	4.0 w/ft	4	64.0 w	120deg from NADIR
						TOTAL LOAD	512.0 w	
STATION HOUSE - PERIMETER RIM - ZONES 2021-2022								
Z021	STATION HOUSE - PERIMETER RIM - INNER	G1C	SURFACE MOUNT 48" ADJUSTABLE LED LINEAR WITH ASYMMETRIC (30X60 DEG) OPTICS	DMX	4.0 w/ft	28	448.0 w	110deg from NADIR
Z022	STATION HOUSE - PERIMETER RIM - OUTER	G1C	SURFACE MOUNT 48" ADJUSTABLE LED LINEAR WITH ASYMMETRIC (30X60 DEG) OPTICS	DMX	4.0 w/ft	32	512.0 w	120deg from NADIR
						TOTAL LOAD	960.0 w	
STATION HOUSE - FARE ARRAY CANOPY - ZONE 2023-2030								
Z023	FARE ARRAY CANOPY NORTH - HISTORIC TRUSS	G4	SURFACE MOUNT ADJUSTABLE LED ACCENT	DMX	7.0 w	12	84.0 w	115deg from NADIR
Z024	OMITTED							
Z025	FARE ARRAY CANOPY SOUTH - HISTORIC TRUSS	G4	SURFACE MOUNT ADJUSTABLE LED ACCENT	DMX	7.0 w	12	84.0 w	115deg from NADIR
Z026	OMITTED							
						TOTAL LOAD	168.0 w	
OUTER PLATFORM - EAST - ZONE 031-040								
Z031	OUTER PLATFORM - LIGHTTRAY - EAST - INNER	G1D	SURFACE MOUNT 48" ADJUSTABLE LED LINEAR WITH 60X90 DEG OPTICS	DMX	4.0 w/ft	18	288.0 w	160deg from NADIR
Z032	OUTER PLATFORM - LIGHTTRAY - EAST - INNER	G1A	SURFACE MOUNT 48" ADJUSTABLE LED LINEAR WITH 30X90 DEG OPTICS	DMX	4.0 w/ft	18	288.0 w	125deg from NADIR
Z033	OUTER PLATFORM - LIGHTTRAY - EAST - OUTER	G1F	SURFACE MOUNT 48" ADJUSTABLE LED LINEAR WITH 90X90 DEG OPTICS (LOW OUTPUT)	DMX	2.0 w/ft	21	168.0 w	120deg from NADIR
Z034			OMITTED					
						TOTAL LOAD	744.0 w	
OUTER PLATFORM - WEST - ZONE 041-050								
Z041	OUTER PLATFORM - LIGHTTRAY - WEST - INNER	G1D	SURFACE MOUNT 48" ADJUSTABLE LED LINEAR WITH 60X90 DEG OPTICS	DMX	4.0 w/ft	24	384.0 w	160deg from NADIR
Z042	OUTER PLATFORM - LIGHTTRAY - WEST - INNER	G1A	SURFACE MOUNT 48" ADJUSTABLE LED LINEAR WITH 30X90 DEG OPTICS	DMX	4.0 w/ft	24	384.0 w	125deg from NADIR
Z043	OUTER PLATFORM - LIGHTTRAY - WEST - OUTER	G1F	SURFACE MOUNT 48" ADJUSTABLE LED LINEAR WITH 90X90 DEG OPTICS (LOW OUTPUT)	DMX	2.0 w/ft	23	184.0 w	120deg from NADIR
Z044			OMITTED					
						TOTAL LOAD	952.0 w	
PRIMARY STAIR - NORTH - ZONES 101-600								
Z101	PRIMARY STAIR -NORTH - FIXTURE 1 - 16 ZONES**	G3	SURFACE MOUNT COLOR CHANGING 48" ADJ. LED LINEAR WITH 90X90 DEG OPTIC, 4 COLOR ZONES - RGBW - 1FT INCREMENT CONTROL**	DMX	4.0 w/ft	1	16.0 w	135deg from NADIR
Z117	PRIMARY STAIR -NORTH - FIXTURE 2 - 16 ZONES**	G3	SURFACE MOUNT COLOR CHANGING 48" ADJ. LED LINEAR WITH 90X90 DEG OPTIC, 4 COLOR ZONES - RGBW - 1FT INCREMENT CONTROL**	DMX	4.0 w/ft	1	16.0 w	135deg from NADIR
Z133	PRIMARY STAIR -NORTH - FIXTURE 3 - 16 ZONES**	G3	SURFACE MOUNT COLOR CHANGING 48" ADJ. LED LINEAR WITH 90X90 DEG OPTIC, 4 COLOR ZONES - RGBW - 1FT INCREMENT CONTROL**	DMX	4.0 w/ft	1	16.0 w	135deg from NADIR
Z149	PRIMARY STAIR -NORTH - FIXTURE 4 - 16 ZONES**	G3	SURFACE MOUNT COLOR CHANGING 48" ADJ. LED LINEAR WITH 90X90 DEG OPTIC, 4 COLOR ZONES - RGBW - 1FT INCREMENT CONTROL**	DMX	4.0 w/ft	1	16.0 w	135deg from NADIR
Z165	PRIMARY STAIR -NORTH - FIXTURE 5 - 16 ZONES**	G3	SURFACE MOUNT COLOR CHANGING 48" ADJ. LED LINEAR WITH 90X90 DEG OPTIC, 4 COLOR ZONES - RGBW - 1FT INCREMENT CONTROL**	DMX	4.0 w/ft	1	16.0 w	135deg from NADIR
Z181	PRIMARY STAIR -NORTH - FIXTURE 6 - 16 ZONES**	G3	SURFACE MOUNT COLOR CHANGING 48" ADJ. LED LINEAR WITH 90X90 DEG OPTIC, 4 COLOR ZONES - RGBW - 1FT INCREMENT CONTROL**	DMX	4.0 w/ft	1	16.0 w	135deg from NADIR
Z197	PRIMARY STAIR -NORTH - FIXTURE 7 - 16 ZONES**	G3	SURFACE MOUNT COLOR CHANGING 48" ADJ. LED LINEAR WITH 90X90 DEG OPTIC, 4 COLOR ZONES - RGBW - 1FT INCREMENT CONTROL**	DMX	4.0 w/ft	1	16.0 w	135deg from NADIR
Z213	PRIMARY STAIR -NORTH - FIXTURE 8 - 16 ZONES**	G3	SURFACE MOUNT COLOR CHANGING 48" ADJ. LED LINEAR WITH 90X90 DEG OPTIC, 4 COLOR ZONES - RGBW - 1FT INCREMENT CONTROL**	DMX	4.0 w/ft	1	16.0 w	135deg from NADIR

ZONE SCHEDULE
STATE/ LAKE LOOP ELEVATED STATION
CHICAGO, IL

ZONE NO.	ZONE DESCRIPTION	FIXTURE TYPE	FIXTURE DESCRIPTION	DRIVER	INPUT WATTAGE	FIXTURE QTY	TOTAL LOAD	AIMING ANGLE*
Z229	PRIMARY STAIR -NORTH - FIXTURE 9 - 16 ZONES**	G3	SURFACE MOUNT COLOR CHANGING 48" ADJ. LED LINEAR WITH 90X90 DEG OPTIC, 4 COLOR ZONES - RGBW - 1FT INCREMENT CONTROL**	DMX	4.0 w/ft	1	16.0 w	135deg from NADIR
Z245	PRIMARY STAIR -NORTH - FIXTURE 10 - 16 ZONES**	G3	SURFACE MOUNT COLOR CHANGING 48" ADJ. LED LINEAR WITH 90X90 DEG OPTIC, 4 COLOR ZONES - RGBW - 1FT INCREMENT CONTROL**	DMX	4.0 w/ft	1	16.0 w	135deg from NADIR
Z261	PRIMARY STAIR -NORTH - FIXTURE 11 - 16 ZONES**	G3	SURFACE MOUNT COLOR CHANGING 48" ADJ. LED LINEAR WITH 90X90 DEG OPTIC, 4 COLOR ZONES - RGBW - 1FT INCREMENT CONTROL**	DMX	4.0 w/ft	1	16.0 w	135deg from NADIR
Z277	PRIMARY STAIR -NORTH - FIXTURE 12 - 16 ZONES**	G3	SURFACE MOUNT COLOR CHANGING 48" ADJ. LED LINEAR WITH 90X90 DEG OPTIC, 4 COLOR ZONES - RGBW - 1FT INCREMENT CONTROL**	DMX	4.0 w/ft	1	16.0 w	135deg from NADIR
Z293	PRIMARY STAIR -NORTH - FIXTURE 13 - 16 ZONES**	G3	SURFACE MOUNT COLOR CHANGING 48" ADJ. LED LINEAR WITH 90X90 DEG OPTIC, 4 COLOR ZONES - RGBW - 1FT INCREMENT CONTROL	DMX	4.0 w/ft	1	16.0 w	135deg from NADIR
Z309	PRIMARY STAIR -NORTH - FIXTURE 14 - 16 ZONES**	G3	SURFACE MOUNT COLOR CHANGING 48" ADJ. LED LINEAR WITH 90X90 DEG OPTIC, 4 COLOR ZONES - RGBW - 1FT INCREMENT CONTROL	DMX	4.0 w/ft	1	16.0 w	135deg from NADIR
Z325	PRIMARY STAIR -NORTH - FIXTURE 15 - 16 ZONES**	G3	SURFACE MOUNT COLOR CHANGING 48" ADJ. LED LINEAR WITH 90X90 DEG OPTIC, 4 COLOR ZONES - RGBW - 1FT INCREMENT CONTROL**	DMX	4.0 w/ft	1	16.0 w	135deg from NADIR
Z341	PRIMARY STAIR -NORTH - FIXTURE 16 - 16 ZONES**	G3	SURFACE MOUNT COLOR CHANGING 48" ADJ. LED LINEAR WITH 90X90 DEG OPTIC, 4 COLOR ZONES - RGBW - 1FT INCREMENT CONTROL**	DMX	4.0 w/ft	1	16.0 w	135deg from NADIR
Z357	PRIMARY STAIR -NORTH - FIXTURE 17 - 16 ZONES**	G3	SURFACE MOUNT COLOR CHANGING 48" ADJ. LED LINEAR WITH 90X90 DEG OPTIC, 4 COLOR ZONES - RGBW - 1FT INCREMENT CONTROL**	DMX	4.0 w/ft	1	16.0 w	135deg from NADIR
Z373	PRIMARY STAIR -NORTH - FIXTURE 18 - 16 ZONES**	G3	SURFACE MOUNT COLOR CHANGING 48" ADJ. LED LINEAR WITH 90X90 DEG OPTIC, 4 COLOR ZONES - RGBW - 1FT INCREMENT CONTROL**	DMX	4.0 w/ft	1	16.0 w	135deg from NADIR
Z389	PRIMARY STAIR -NORTH - FIXTURE 19 - 16 ZONES**	G3	SURFACE MOUNT COLOR CHANGING 48" ADJ. LED LINEAR WITH 90X90 DEG OPTIC, 4 COLOR ZONES - RGBW - 1FT INCREMENT CONTROL**	DMX	4.0 w/ft	1	16.0 w	135deg from NADIR
Z405	PRIMARY STAIR -NORTH - FIXTURE 20 - 16 ZONES**	G3	SURFACE MOUNT COLOR CHANGING 48" ADJ. LED LINEAR WITH 90X90 DEG OPTIC, 4 COLOR ZONES - RGBW - 1FT INCREMENT CONTROL**	DMX	4.0 w/ft	1	16.0 w	135deg from NADIR
Z421	PRIMARY STAIR -NORTH - FIXTURE 21 - 16 ZONES**	G3	SURFACE MOUNT COLOR CHANGING 48" ADJ. LED LINEAR WITH 90X90 DEG OPTIC, 4 COLOR ZONES - RGBW - 1FT INCREMENT CONTROL**	DMX	4.0 w/ft	1	16.0 w	135deg from NADIR
Z437	PRIMARY STAIR -NORTH - FIXTURE 22 - 16 ZONES**	G3	SURFACE MOUNT COLOR CHANGING 48" ADJ. LED LINEAR WITH 90X90 DEG OPTIC, 4 COLOR ZONES - RGBW - 1FT INCREMENT CONTROL**	DMX	4.0 w/ft	1	16.0 w	135deg from NADIR
Z453	PRIMARY STAIR -NORTH - FIXTURE 23 - 16 ZONES**	G3	SURFACE MOUNT COLOR CHANGING 48" ADJ. LED LINEAR WITH 90X90 DEG OPTIC, 4 COLOR ZONES - RGBW - 1FT INCREMENT CONTROL**	DMX	4.0 w/ft	1	16.0 w	135deg from NADIR
Z469	PRIMARY STAIR -NORTH - FIXTURE 24 - 16 ZONES**	G3	SURFACE MOUNT COLOR CHANGING 48" ADJ. LED LINEAR WITH 90X90 DEG OPTIC, 4 COLOR ZONES - RGBW - 1FT INCREMENT CONTROL**	DMX	4.0 w/ft	1	16.0 w	135deg from NADIR
Z485	PRIMARY STAIR -NORTH - FIXTURE 25 - 16 ZONES**	G3	SURFACE MOUNT COLOR CHANGING 48" ADJ. LED LINEAR WITH 90X90 DEG OPTIC, 4 COLOR ZONES - RGBW - 1FT INCREMENT CONTROL**	DMX	4.0 w/ft	1	16.0 w	135deg from NADIR
Z501	PRIMARY STAIR -NORTH - FIXTURE 26 - 16 ZONES**	G3	SURFACE MOUNT COLOR CHANGING 48" ADJ. LED LINEAR WITH 90X90 DEG OPTIC, 4 COLOR ZONES - RGBW - 1FT INCREMENT CONTROL**	DMX	4.0 w/ft	1	16.0 w	135deg from NADIR
Z517	PRIMARY STAIR -NORTH - FIXTURE 27 - 16 ZONES**	G3	SURFACE MOUNT COLOR CHANGING 48" ADJ. LED LINEAR WITH 90X90 DEG OPTIC, 4 COLOR ZONES - RGBW - 1FT INCREMENT CONTROL**	DMX	4.0 w/ft	1	16.0 w	135deg from NADIR
Z533	PRIMARY STAIR -NORTH - FIXTURE 28 - 16 ZONES**	G3	SURFACE MOUNT COLOR CHANGING 48" ADJ. LED LINEAR WITH 90X90 DEG OPTIC, 4 COLOR ZONES - RGBW - 1FT INCREMENT CONTROL**	DMX	4.0 w/ft	1	16.0 w	135deg from NADIR
Z549	PRIMARY STAIR -NORTH - FIXTURE 29 - 16 ZONES**	G3	SURFACE MOUNT COLOR CHANGING 48" ADJ. LED LINEAR WITH 90X90 DEG OPTIC, 4 COLOR ZONES - RGBW - 1FT INCREMENT CONTROL**	DMX	4.0 w/ft	1	16.0 w	135deg from NADIR
						TOTAL LOAD	464.0 w	
PRIMARY STAIR - SOUTH - ZONES 601-1200								
Z601	PRIMARY STAIR -SOUTH - FIXTURE 1 - 16 ZONES**	G3	SURFACE MOUNT COLOR CHANGING 48" ADJ. LED LINEAR WITH 90X90 DEG OPTIC, 4 COLOR ZONES - RGBW - 1FT INCREMENT CONTROL**	DMX	4.0 w/ft	1	16.0 w	135deg from NADIR
Z617	PRIMARY STAIR -SOUTH - FIXTURE 2 - 16 ZONES**	G3	SURFACE MOUNT COLOR CHANGING 48" ADJ. LED LINEAR WITH 90X90 DEG OPTIC, 4 COLOR ZONES - RGBW - 1FT INCREMENT CONTROL**	DMX	4.0 w/ft	1	16.0 w	135deg from NADIR
Z633	PRIMARY STAIR -SOUTH - FIXTURE 3 - 16 ZONES**	G3	SURFACE MOUNT COLOR CHANGING 48" ADJ. LED LINEAR WITH 90X90 DEG OPTIC, 4 COLOR ZONES - RGBW - 1FT INCREMENT CONTROL**	DMX	4.0 w/ft	1	16.0 w	135deg from NADIR
Z649	PRIMARY STAIR -SOUTH - FIXTURE 4 - 16 ZONES**	G3	SURFACE MOUNT COLOR CHANGING 48" ADJ. LED LINEAR WITH 90X90 DEG OPTIC, 4 COLOR ZONES - RGBW - 1FT INCREMENT CONTROL**	DMX	4.0 w/ft	1	16.0 w	135deg from NADIR
Z665	PRIMARY STAIR -SOUTH - FIXTURE 5 - 16 ZONES**	G3	SURFACE MOUNT COLOR CHANGING 48" ADJ. LED LINEAR WITH 90X90 DEG OPTIC, 4 COLOR ZONES - RGBW - 1FT INCREMENT CONTROL**	DMX	4.0 w/ft	1	16.0 w	135deg from NADIR
Z681	PRIMARY STAIR -SOUTH - FIXTURE 6 - 16 ZONES**	G3	SURFACE MOUNT COLOR CHANGING 48" ADJ. LED LINEAR WITH 90X90 DEG OPTIC, 4 COLOR ZONES - RGBW - 1FT INCREMENT CONTROL**	DMX	4.0 w/ft	1	16.0 w	135deg from NADIR
Z697	PRIMARY STAIR -SOUTH - FIXTURE 7 - 16 ZONES**	G3	SURFACE MOUNT COLOR CHANGING 48" ADJ. LED LINEAR WITH 90X90 DEG OPTIC, 4 COLOR ZONES - RGBW - 1FT INCREMENT CONTROL**	DMX	4.0 w/ft	1	16.0 w	135deg from NADIR
Z713	PRIMARY STAIR -SOUTH - FIXTURE 8 - 16 ZONES**	G3	SURFACE MOUNT COLOR CHANGING 48" ADJ. LED LINEAR WITH 90X90 DEG OPTIC, 4 COLOR ZONES - RGBW - 1FT INCREMENT CONTROL**	DMX	4.0 w/ft	1	16.0 w	135deg from NADIR
Z729	PRIMARY STAIR -SOUTH - FIXTURE 9 - 16 ZONES**	G3	SURFACE MOUNT COLOR CHANGING 48" ADJ. LED LINEAR WITH 90X90 DEG OPTIC, 4 COLOR ZONES - RGBW - 1FT INCREMENT CONTROL**	DMX	4.0 w/ft	1	16.0 w	135deg from NADIR
Z745	PRIMARY STAIR -SOUTH - FIXTURE 10 - 16 ZONES**	G3	SURFACE MOUNT COLOR CHANGING 48" ADJ. LED LINEAR WITH 90X90 DEG OPTIC, 4 COLOR ZONES - RGBW - 1FT INCREMENT CONTROL**	DMX	4.0 w/ft	1	16.0 w	135deg from NADIR
Z761	PRIMARY STAIR -SOUTH - FIXTURE 11 - 16 ZONES**	G3	SURFACE MOUNT COLOR CHANGING 48" ADJ. LED LINEAR WITH 90X90 DEG OPTIC, 4 COLOR ZONES - RGBW - 1FT INCREMENT CONTROL**	DMX	4.0 w/ft	1	16.0 w	135deg from NADIR
Z777	PRIMARY STAIR -SOUTH - FIXTURE 12 - 16 ZONES**	G3	SURFACE MOUNT COLOR CHANGING 48" ADJ. LED LINEAR WITH 90X90 DEG OPTIC, 4 COLOR ZONES - RGBW - 1FT INCREMENT CONTROL**	DMX	4.0 w/ft	1	16.0 w	135deg from NADIR
Z793	PRIMARY STAIR -SOUTH - FIXTURE 13 - 16 ZONES**	G3	SURFACE MOUNT COLOR CHANGING 48" ADJ. LED LINEAR WITH 90X90 DEG OPTIC, 4 COLOR ZONES - RGBW - 1FT INCREMENT CONTROL	DMX	4.0 w/ft	1	16.0 w	135deg from NADIR
Z809	PRIMARY STAIR -SOUTH - FIXTURE 14 - 16 ZONES**	G3	SURFACE MOUNT COLOR CHANGING 48" ADJ. LED LINEAR WITH 90X90 DEG OPTIC, 4 COLOR ZONES - RGBW - 1FT INCREMENT CONTROL	DMX	4.0 w/ft	1	16.0 w	135deg from NADIR
Z825	PRIMARY STAIR -SOUTH - FIXTURE 15 - 16 ZONES**	G3	SURFACE MOUNT COLOR CHANGING 48" ADJ. LED LINEAR WITH 90X90 DEG OPTIC, 4 COLOR ZONES - RGBW - 1FT INCREMENT CONTROL**	DMX	4.0 w/ft	1	16.0 w	135deg from NADIR
Z841	PRIMARY STAIR -SOUTH - FIXTURE 16 - 16 ZONES**	G3	SURFACE MOUNT COLOR CHANGING 48" ADJ. LED LINEAR WITH 90X90 DEG OPTIC, 4 COLOR ZONES - RGBW - 1FT INCREMENT CONTROL**	DMX	4.0 w/ft	1	16.0 w	135deg from NADIR
Z857	PRIMARY STAIR -SOUTH - FIXTURE 17 - 16 ZONES**	G3	SURFACE MOUNT COLOR CHANGING 48" ADJ. LED LINEAR WITH 90X90 DEG OPTIC, 4 COLOR ZONES - RGBW - 1FT INCREMENT CONTROL**	DMX	4.0 w/ft	1	16.0 w	135deg from NADIR
Z873	PRIMARY STAIR -SOUTH - FIXTURE 18 - 16 ZONES**	G3	SURFACE MOUNT COLOR CHANGING 48" ADJ. LED LINEAR WITH 90X90 DEG OPTIC, 4 COLOR ZONES - RGBW - 1FT INCREMENT CONTROL**	DMX	4.0 w/ft	1	16.0 w	135deg from NADIR
Z889	PRIMARY STAIR -SOUTH - FIXTURE 19 - 16 ZONES**	G3	SURFACE MOUNT COLOR CHANGING 48" ADJ. LED LINEAR WITH 90X90 DEG OPTIC, 4 COLOR ZONES - RGBW - 1FT INCREMENT CONTROL**	DMX	4.0 w/ft	1	16.0 w	135deg from NADIR

ZONE SCHEDULE
STATE/ LAKE LOOP ELEVATED STATION
CHICAGO, IL

ZONE NO.	ZONE DESCRIPTION	FIXTURE TYPE	FIXTURE DESCRIPTION	DRIVER	INPUT WATTAGE	FIXTURE QTY	TOTAL LOAD	AIMING ANGLE*
Z905	PRIMARY STAIR -SOUTH - FIXTURE 20 - 16 ZONES**	G3	SURFACE MOUNT COLOR CHANGING 48" ADJ. LED LINEAR WITH 90X90 DEG OPTIC, 4 COLOR ZONES - RGBW - 1FT INCREMENT CONTROL**	DMX	4.0 w/ft	1	16.0 w	135deg from NADIR
Z921	PRIMARY STAIR -SOUTH - FIXTURE 21 - 16 ZONES**	G3	SURFACE MOUNT COLOR CHANGING 48" ADJ. LED LINEAR WITH 90X90 DEG OPTIC, 4 COLOR ZONES - RGBW - 1FT INCREMENT CONTROL**	DMX	4.0 w/ft	1	16.0 w	135deg from NADIR
Z937	PRIMARY STAIR -SOUTH - FIXTURE 22 - 16 ZONES**	G3	SURFACE MOUNT COLOR CHANGING 48" ADJ. LED LINEAR WITH 90X90 DEG OPTIC, 4 COLOR ZONES - RGBW - 1FT INCREMENT CONTROL**	DMX	4.0 w/ft	1	16.0 w	135deg from NADIR
Z953	PRIMARY STAIR -SOUTH - FIXTURE 23 - 16 ZONES**	G3	SURFACE MOUNT COLOR CHANGING 48" ADJ. LED LINEAR WITH 90X90 DEG OPTIC, 4 COLOR ZONES - RGBW - 1FT INCREMENT CONTROL**	DMX	4.0 w/ft	1	16.0 w	135deg from NADIR
Z969	PRIMARY STAIR -SOUTH - FIXTURE 24 - 16 ZONES**	G3	SURFACE MOUNT COLOR CHANGING 48" ADJ. LED LINEAR WITH 90X90 DEG OPTIC, 4 COLOR ZONES - RGBW - 1FT INCREMENT CONTROL**	DMX	4.0 w/ft	1	16.0 w	135deg from NADIR
Z985	PRIMARY STAIR -SOUTH - FIXTURE 25 - 16 ZONES**	G3	SURFACE MOUNT COLOR CHANGING 48" ADJ. LED LINEAR WITH 90X90 DEG OPTIC, 4 COLOR ZONES - RGBW - 1FT INCREMENT CONTROL**	DMX	4.0 w/ft	1	16.0 w	135deg from NADIR
Z1001	PRIMARY STAIR -SOUTH - FIXTURE 26 - 16 ZONES**	G3	SURFACE MOUNT COLOR CHANGING 48" ADJ. LED LINEAR WITH 90X90 DEG OPTIC, 4 COLOR ZONES - RGBW - 1FT INCREMENT CONTROL**	DMX	4.0 w/ft	1	16.0 w	135deg from NADIR
Z1017	PRIMARY STAIR -SOUTH - FIXTURE 27 - 16 ZONES**	G3	SURFACE MOUNT COLOR CHANGING 48" ADJ. LED LINEAR WITH 90X90 DEG OPTIC, 4 COLOR ZONES - RGBW - 1FT INCREMENT CONTROL**	DMX	4.0 w/ft	1	16.0 w	135deg from NADIR
Z1033	PRIMARY STAIR -SOUTH - FIXTURE 28 - 16 ZONES**	G3	SURFACE MOUNT COLOR CHANGING 48" ADJ. LED LINEAR WITH 90X90 DEG OPTIC, 4 COLOR ZONES - RGBW - 1FT INCREMENT CONTROL**	DMX	4.0 w/ft	1	16.0 w	135deg from NADIR
Z1049	PRIMARY STAIR -SOUTH - FIXTURE 29 - 16 ZONES**	G3	SURFACE MOUNT COLOR CHANGING 48" ADJ. LED LINEAR WITH 90X90 DEG OPTIC, 4 COLOR ZONES - RGBW - 1FT INCREMENT CONTROL**	DMX	4.0 w/ft	1	16.0 w	135deg from NADIR
						TOTAL LOAD	464.0 w	

* ALLOW 10- 15 DEG ADJUSTMENT UP OR DOWN (30DEG TOTAL)
** 1 ZONE PER FOOT X 4 FT. X 4 COLORS = 16 ZONES PER FIXTURE - FIXTURE SELF-ASSIGNS ALL ZONES FROM STARTING ADDRESS

PROJECT LOAD 4776.0 w

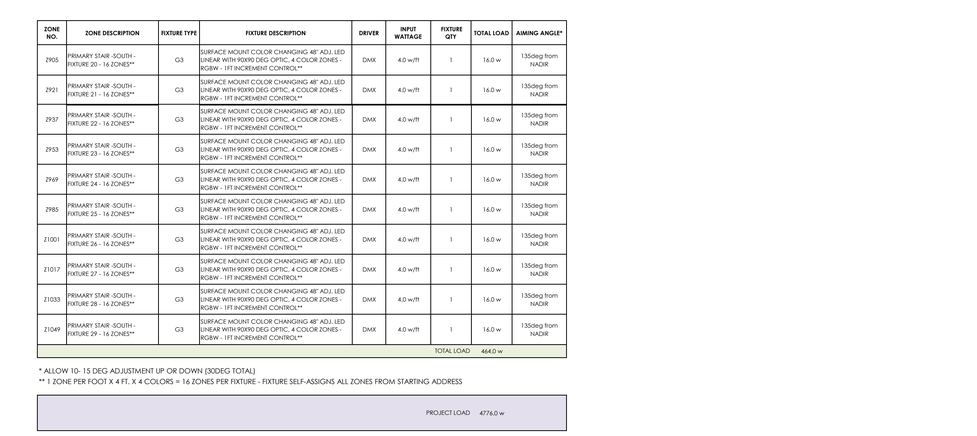

EXAMPLE - FIXTURE RISER

Fixture Riser Diagram

DESIGN BY:												
DRAWN BY:												
CHECKED BY:												
APPROVED BY:				100% QA SUBMITTAL								
CDOT/APPROVED BY:		NO.	DATE	REVISIONS	DES.	DRW.	CHK.	DCCO	CDOT			

TRANSYSTEMS
222 SOUTH RIVERSIDE PLAZA SUITE 610
CHICAGO, ILLINOIS 60606

SKIDMORE, OWINGS & MERRILL LLP
224 SOUTH MICHIGAN AVENUE, SUITE 1000
CHICAGO, ILLINOIS 60604

GWEN GROSSMAN lighting design

CHICAGO DEPARTMENT OF TRANSPORTATION
DIVISION OF ENGINEERING

STATE / LAKE LOOP ELEVATED STATION
200 NORTH STATE STREET, CHICAGO, IL 60601

SPEC. NO.

ZONE SCHEDULE AND FIXTURE RISER DIAGRAM

DRAWING NO. SL-602

CDOT PROJECT D-1-209 | DATE: 5/9/2022 | REVISION NO.

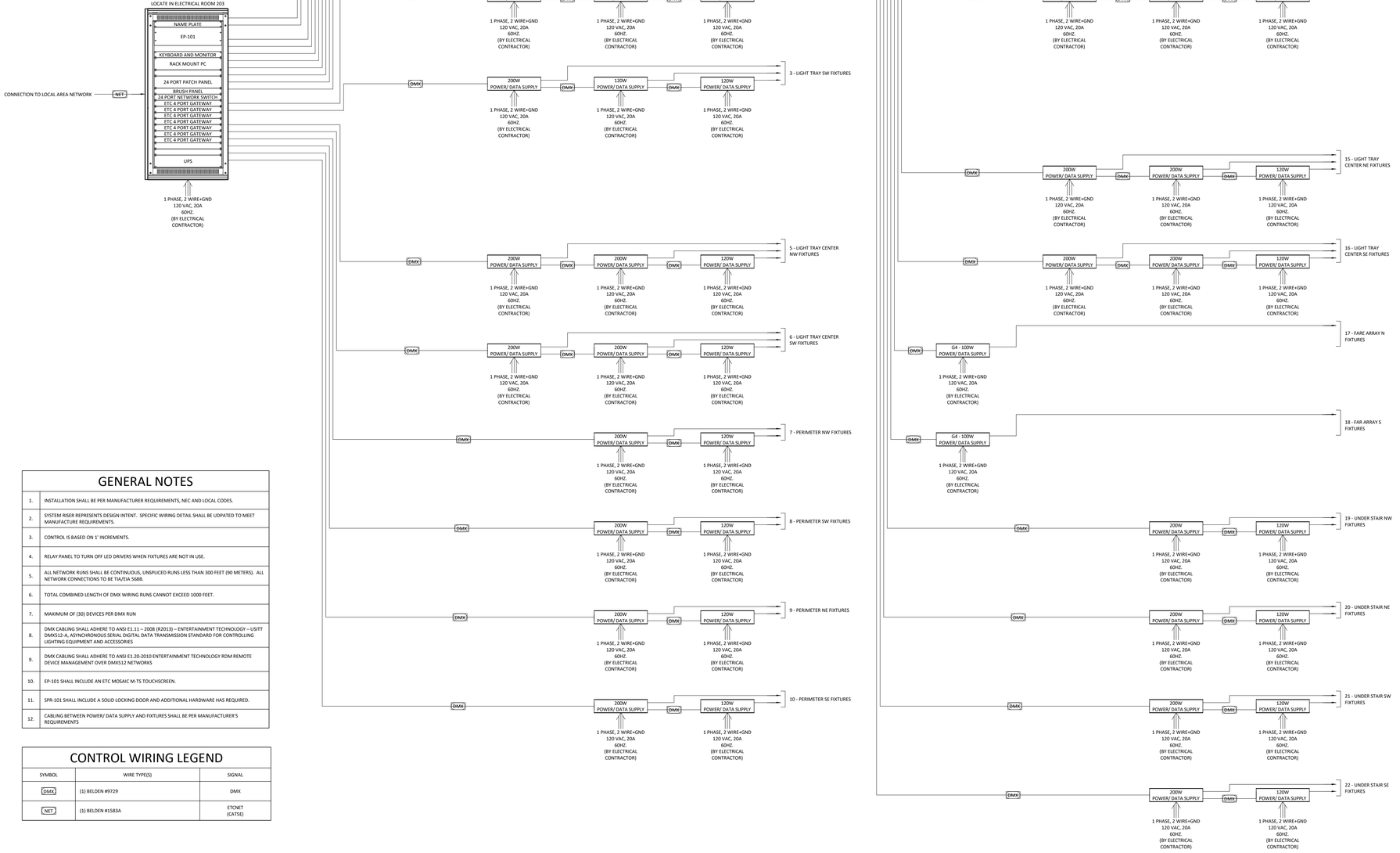

GENERAL NOTES

1.	INSTALLATION SHALL BE PER MANUFACTURER REQUIREMENTS, NEC AND LOCAL CODES.
2.	SYSTEM RISER REPRESENTS DESIGN INTENT. SPECIFIC WIRING DETAIL SHALL BE UDPATED TO MEET MANUFACTURE REQUIREMENTS.
3.	CONTROL IS BASED ON 1" INCREMENTS.
4.	RELAY PANEL TO TURN OFF LED DRIVERS WHEN FIXTURES ARE NOT IN USE.
5.	ALL NETWORK RUNS SHALL BE CONTINUOUS, UNSPLICED RUNS LESS THAN 300 FEET (90 METERS). ALL NETWORK CONNECTIONS TO BE TIA/EIA 568B.
6.	TOTAL COMBINED LENGTH OF DMX WIRING RUNS CANNOT EXCEED 1000 FEET.
7.	MAXIMUM OF (30) DEVICES PER DMX RUN
8.	DMX CABLING SHALL ADHERE TO ANSI E1.11 – 2008 (R2013) – ENTERTAINMENT TECHNOLOGY – USITT DMX512-A, ASYNCHRONOUS SERIAL DIGITAL DATA TRANSMISSION STANDARD FOR CONTROLLING LIGHTING EQUIPMENT AND ACCESSORIES
9.	DMX CABLING SHALL ADHERE TO ANSI E1.20-2010 ENTERTAINMENT TECHNOLOGY RDM REMOTE DEVICE MANAGEMENT OVER DMX512 NETWORKS
10.	EP-101 SHALL INCLUDE AN ETC MOSAIC M-TS TOUCHSCREEN.
11.	SPR-101 SHALL INCLUDE A SOLID LOCKING DOOR AND ADDITIONAL HARDWARE HAS REQUIRED.
12.	CABLING BETWEEN POWER/ DATA SUPPLY AND FIXTURES SHALL BE PER MANUFACTURER'S REQUIREMENTS

CONTROL WIRING LEGEND

SYMBOL	WIRE TYPE(S)	SIGNAL
DMX	(1) BELDEN #9729	DMX
NET	(1) BELDEN #1583A	ETCNET (CAT5E)

Control Riser Diagram

DESIGN BY:										
DRAWN BY:										
CHECKED BY:										
APPROVED BY:				100% QA SUBMITTAL						
CDOT/APPROVED BY:		NO.	DATE	REVISIONS	DES.	DRW.	CHK.	DCCO	CDOT	

TRANSYSTEMS
222 SOUTH RIVERSIDE PLAZA SUITE 610
CHICAGO, ILLINOIS 60606

SKIDMORE, OWINGS & MERRILL LLP
224 SOUTH MICHIGAN AVENUE, SUITE 1000
CHICAGO, ILLINOIS 60604

GWEN GROSSMAN lighting design

CHICAGO DEPARTMENT OF TRANSPORTATION
DIVISION OF ENGINEERING

STATE / LAKE LOOP ELEVATED STATION
200 NORTH STATE STREET, CHICAGO, IL 60601

SPEC. NO.

CONTROL RISER DIAGRAM

DRAWING NO.
SL-603

CDOT PROJECT D-1-209

DATE: 5/9/2022

REVISION NO.

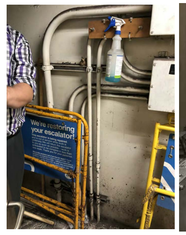

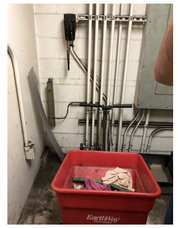

STORAGE ROOM SOUTH WALL AND WEST WALL CONDUIT AND PULL BOX PHOTOS

NOTES:

1. SEE DRAWING E-001 FOR ELECTRICAL SYMBOL LIST.
2. SEE DRAWING E-002 FOR ELECTRICAL GENERAL NOTES AND ABBREVIATIONS.
3. COORDINATE ALL POWER SHUTDOWNS WITH THE AUTHORITY PRIOR TO COMMENCING WORK.
4. EXISTING PULL BOX TO BE RELOCATED FROM STORAGE ROOM TO ADJACENT CONCESSION SPACE. SEE PHOTOS ON THIS DRAWING. INTERCEPT AND REROUTE CONDUIT AND CABLE. CONCEAL ALL CONDUIT FROM VIEW OF PUBLIC.

NOTES(CONT):

5. REMOVE CONCRETE FLOOR TOPPING DEEP ENOUGHT TO ACCESS EMBEDDED CONDUITS, INTERCEPT AND EXTEND CONDUIT TO NEW PULL BOX LOCATION. REPLACE CABLE IN KIND.
6. PROTECT EXISTING PANELBOARD DURING CONSTRUCTION.

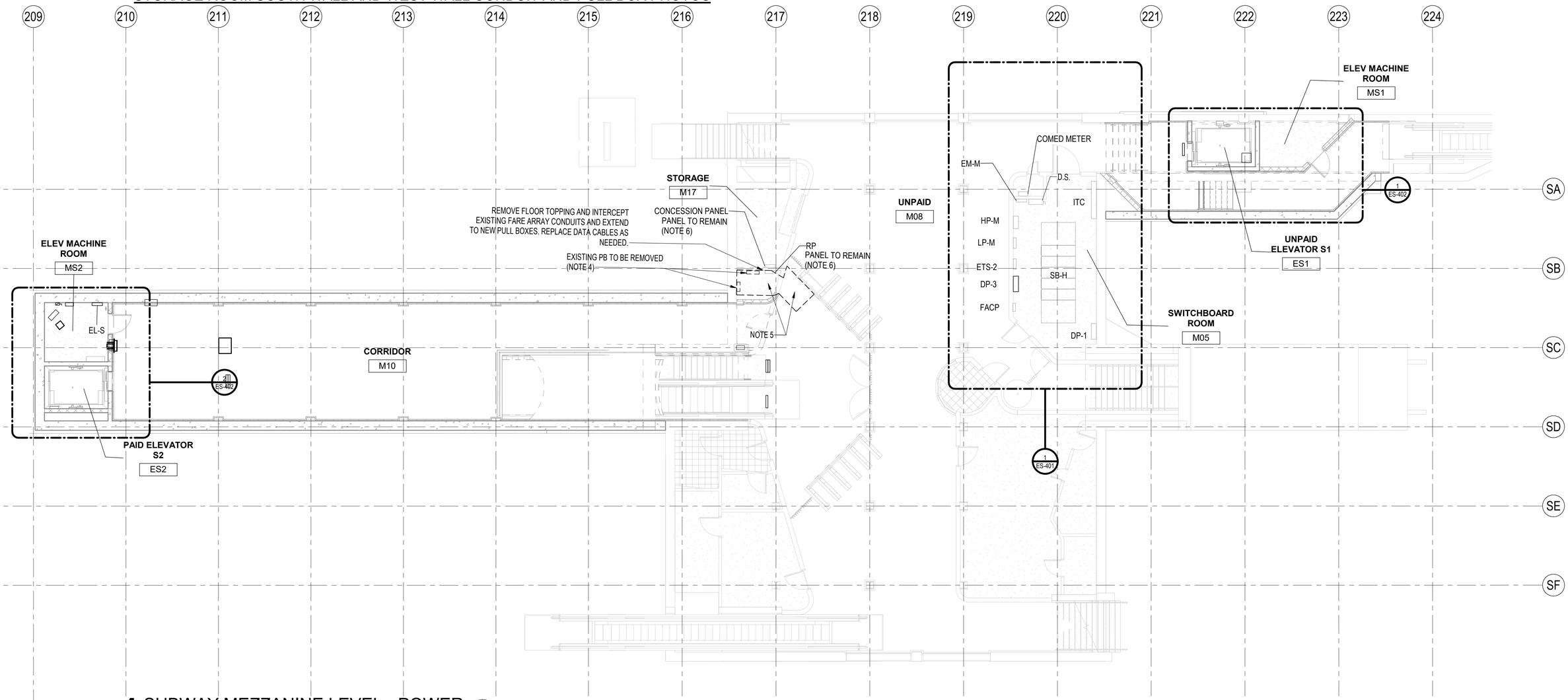

1 SUBWAY MEZZANINE LEVEL - POWER

1/8" = 1'-0"

DESIGN BY:										
DRAWN BY:										
CHECKED BY:										
APPROVED BY:		4	7/3/2023	ISSUED FOR BID	EM	EM	JM			
CDOT/APPROVED BY:		NO.	DATE	REVISIONS	DES.	DRW.	CHK.	DCCO	CDOT	

TRANSYSTEMS
222 SOUTH RIVERSIDE PLAZA SUITE 610
CHICAGO, ILLINOIS 60606

SKIDMORE, OWINGS & MERRILL LLP
224 SOUTH MICHIGAN AVENUE, SUITE 1000
CHICAGO, ILLINOIS 60604

FACET ENGINEERING
4316 NORTH ELSTON AVENUE
CHICAGO, ILLINOIS 60641

CHICAGO DEPARTMENT OF TRANSPORTATION
DIVISION OF ENGINEERING

STATE / LAKE LOOP ELEVATED STATION
200 NORTH STATE STREET, CHICAGO, IL 60601

SUBWAY MEZZANINE POWER PLAN

CDOT PROJECT D-1-209

DATE: 9/9/2022

SPEC. NO.

DRAWING NO. ES-101

REVISION NO.

NOTES:

1. SEE DRAWING E-001 FOR ELECTRICAL SYMBOL LIST.
2. SEE DRAWING E-002 FOR ELECTRICAL GENERAL NOTES AND ABBREVIATIONS.
3. DEMOLISH EXISTING CABLE TRAY SECTION BETWEEN COLUMN LINES 209 AND 210 WHERE CONFLICTING WITH PROPOSED ELEVATOR.
4. TRANSITION FROM THE EXISTING 5 SECTION RACEWAY, AROUND THE COLUMN TO THE PROPOSED 5 CONDUITS ATTACHED TO THE UNDERSIDE OF THE STRUCTURAL BEAM WITH A 1" FLEXIBLE CONDUIT.
5. ATTACH (5) 1" CONDUITS FOR EACH OF THE RACEWAY SECTIONS, SUPPORTED VIA UNISTRUT, TO THE UNDERSIDE OF THE BEAM BETWEEN COLUMN LINES 209 AND 210 AS SHOWN.
6. CONNECT POWER FOR AV-1 TO EXISTING CP PANEL, EXISTING CIRCUIT. PROVIDE 3-#10AWG IN 3/4" C.

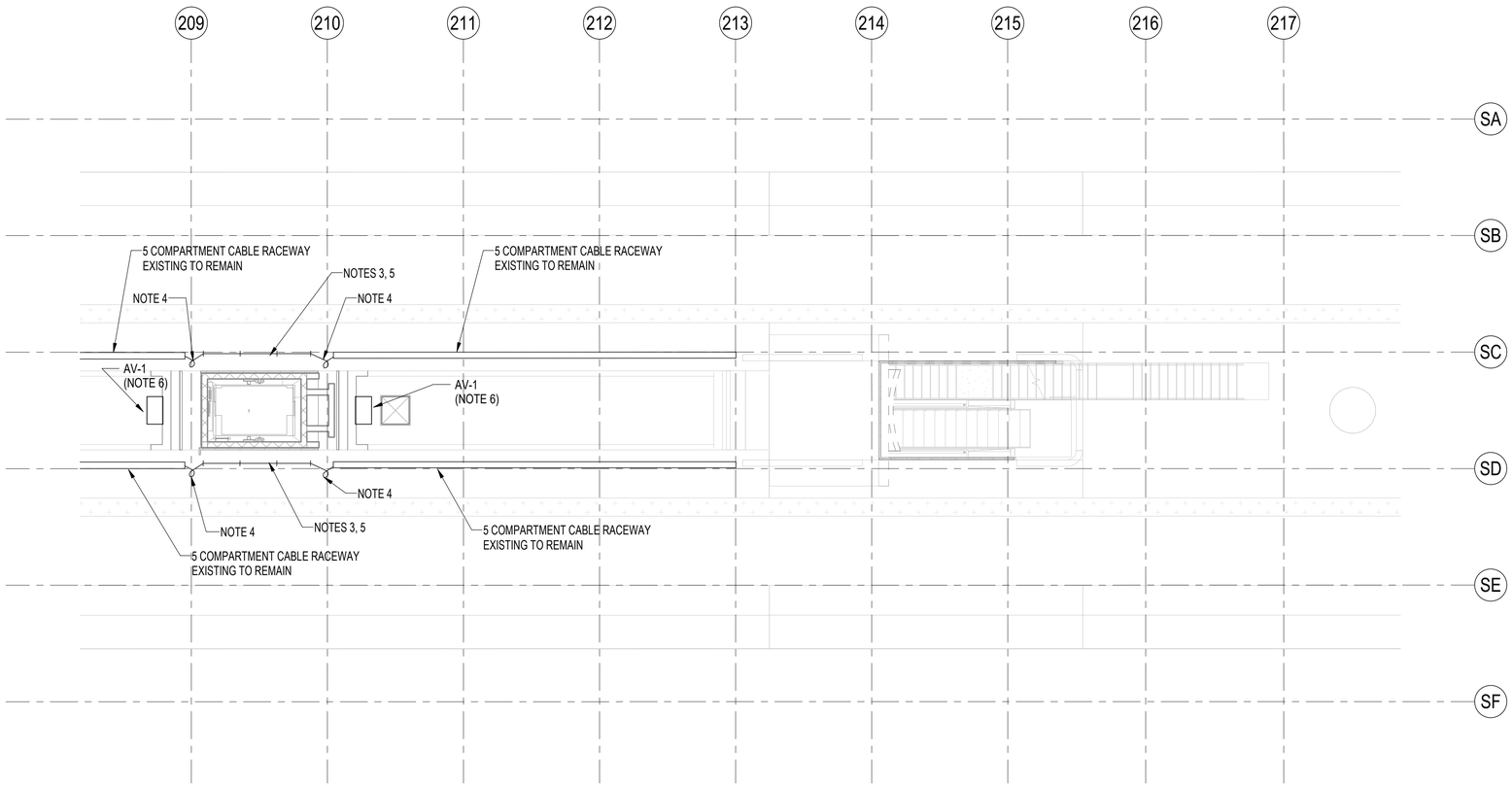

1 SUBWAY PLATFORM LEVEL - POWER PLAN

1/8" = 1'-0"

DESIGN BY:										
DRAWN BY:										
CHECKED BY:										
APPROVED BY:		4	7/3/2023	ISSUED FOR BID	EM	EM	JM			
CDOT/APPROVED BY:		NO.	DATE	REVISIONS	DES.	DRW.	CHK.	DCCO	CDOT	

TRANSYSTEMS
222 SOUTH RIVERSIDE PLAZA SUITE 610
CHICAGO, ILLINOIS 60606

SKIDMORE, OWINGS & MERRILL LLP
224 SOUTH MICHIGAN AVENUE, SUITE 1000
CHICAGO, ILLINOIS 60604

FACET ENGINEERING
4316 NORTH ELSTON AVENUE
CHICAGO, ILLINOIS 60641

CHICAGO DEPARTMENT OF TRANSPORTATION
DIVISION OF ENGINEERING

STATE / LAKE LOOP ELEVATED STATION
200 NORTH STATE STREET, CHICAGO, IL 60601

LAKE/RANDOLPH SUBWAY PLATFORM POWER PLAN

CDOT PROJECT D-1-209 | DATE: 9/9/2022

SPEC. NO.

DRAWING NO. ES-102

REVISION NO.

NOTES:

1. SEE DRAWING E-001 FOR ELECTRICAL SYMBOL LIST.
2. SEE DRAWING E-002 FOR ELECTRICAL GENERAL NOTES AND ABBREVIATIONS.
3. SEE DRAWING E-604 FOR LIGHTING FIXTURE SCHEDULE.

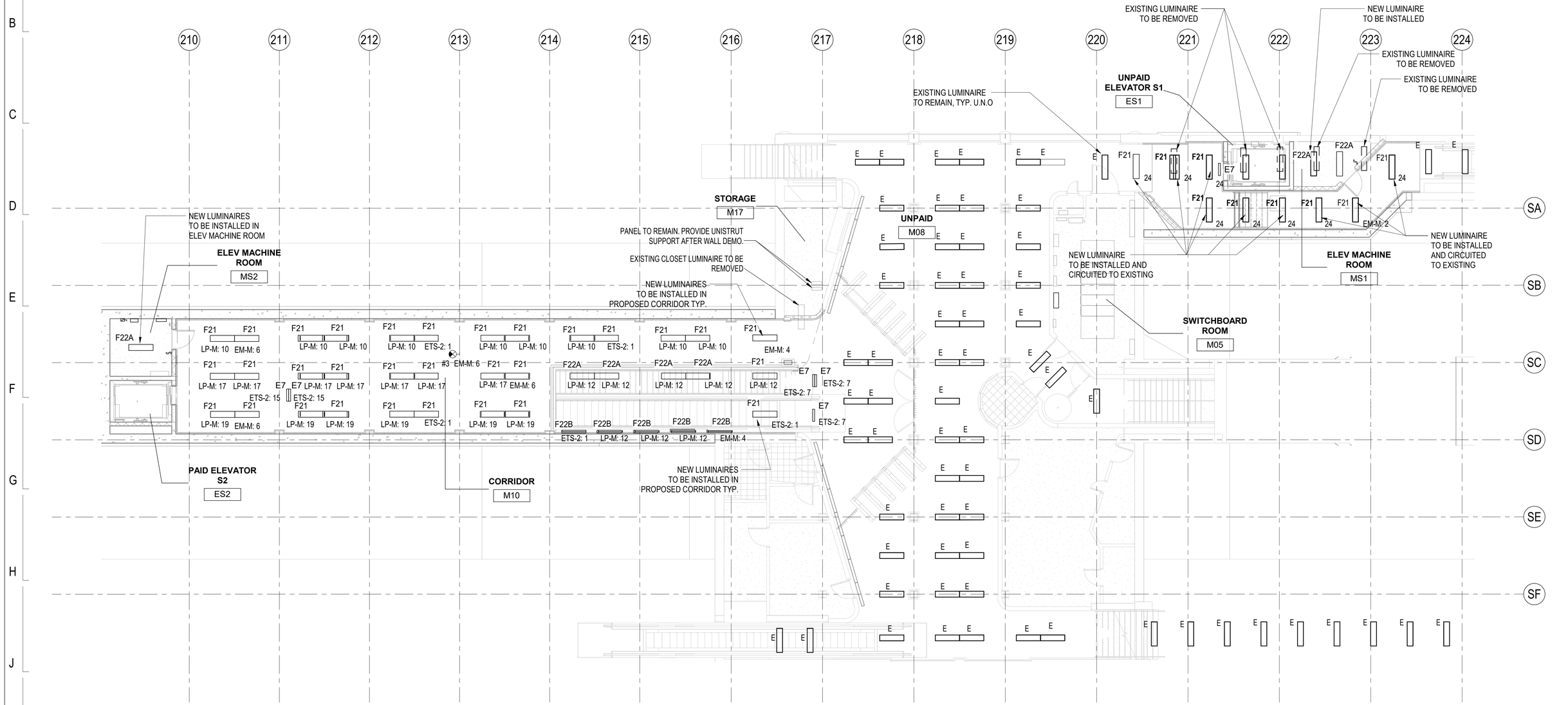

1 SUBWAY MEZZANINE LEVEL - LIGHTING PLAN

1/8" = 1'-0"

DESIGN BY:										
DRAWN BY:										
CHECKED BY:										
APPROVED BY:		4	7/3/2023	ISSUED FOR BID	EM	EM	JM			
CDOT/APPROVED BY:		NO.	DATE	REVISIONS	DES.	DRW.	CHK.	DCCO	CDOT	

TRANSYSTEMS
222 SOUTH RIVERSIDE PLAZA SUITE 610
CHICAGO, ILLINOIS 60606

SKIDMORE, OWINGS & MERRILL LLP
224 SOUTH MICHIGAN AVENUE, SUITE 1000
CHICAGO, ILLINOIS 60604

FACET ENGINEERING
4316 NORTH ELSTON AVENUE
CHICAGO, ILLINOIS 60641

CHICAGO DEPARTMENT OF TRANSPORTATION
DIVISION OF ENGINEERING

STATE / LAKE LOOP ELEVATED STATION
200 NORTH STATE STREET, CHICAGO, IL 60601

SUBWAY MEZZANINE LIGHTING PLAN

CDOT PROJECT D-1-209

DATE: 9/9/2022

SPEC. NO.

DRAWING NO. ES-111

REVISION NO.

NOTES:

1. SEE DRAWING E-001 FOR ELECTRICAL SYMBOL LIST.
2. SEE DRAWING E-002 FOR ELECTRICAL GENERAL NOTES AND ABBREVIATIONS.
3. SEE DRAWING E-604 FOR LIGHTING FIXTURE SCHEDULE.

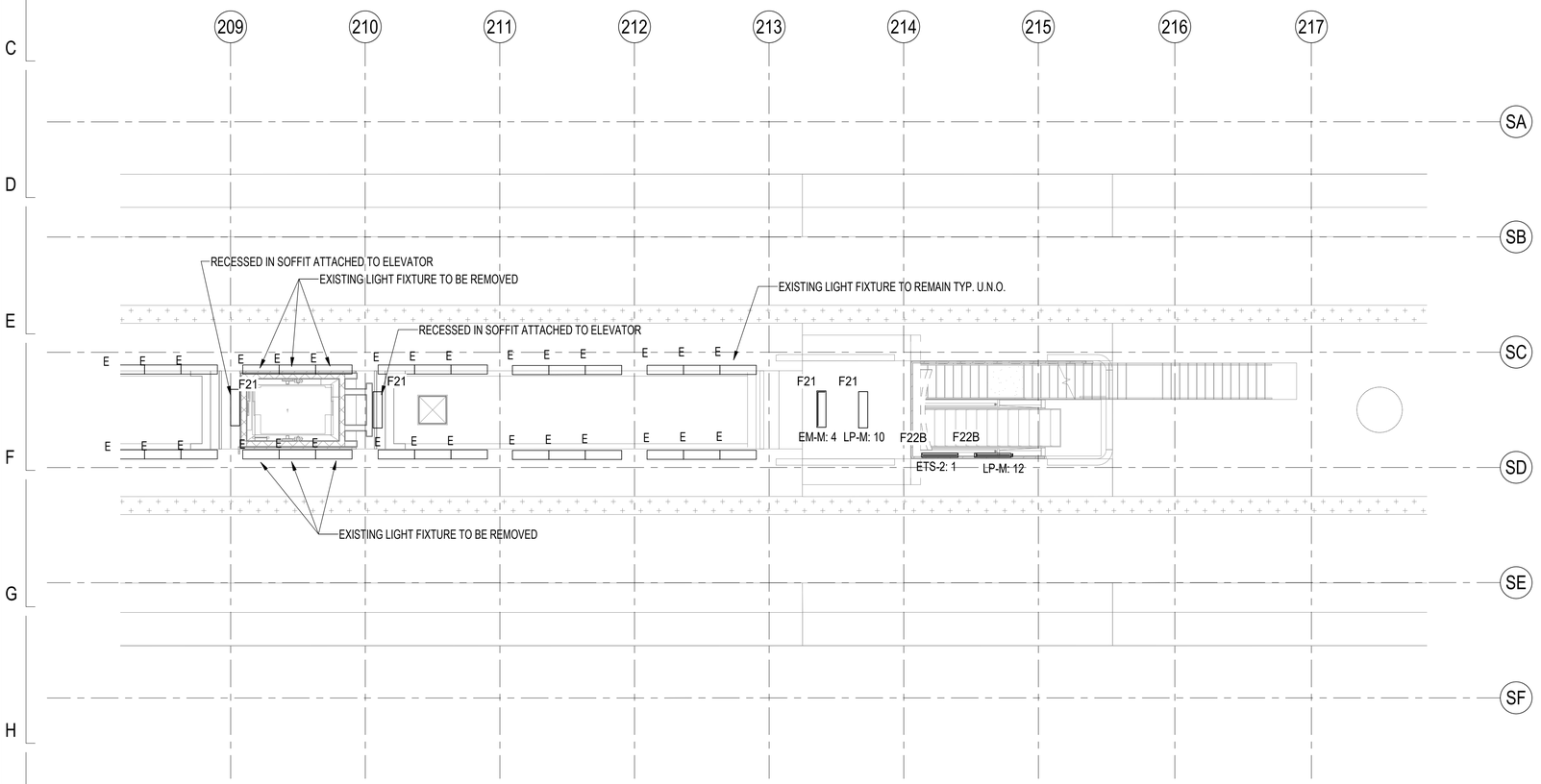

1 SUBWAY PLATFORM LEVEL - LIGHTING PLAN

1/8" = 1'-0"

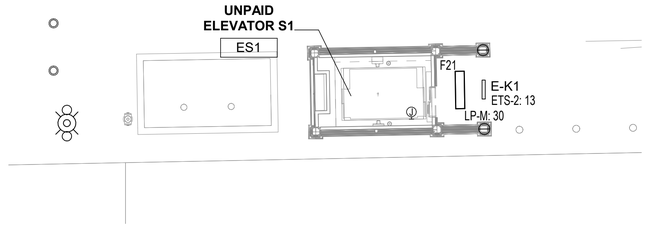

2 SUBWAY STREET LEVEL - LIGHTING PLAN

1/8" = 1'-0"

DESIGN BY:										
DRAWN BY:										
CHECKED BY:										
APPROVED BY:		4	7/3/2023	ISSUED FOR BID	EM	EM	JM			
CDOT/APPROVED BY:		NO.	DATE	REVISIONS	DES.	DRW.	CHK.	DCCO	CDOT	

TRANSYSTEMS
222 SOUTH RIVERSIDE PLAZA SUITE 610
CHICAGO, ILLINOIS 60606

SKIDMORE, OWINGS & MERRILL LLP
224 SOUTH MICHIGAN AVENUE, SUITE 1000
CHICAGO, ILLINOIS 60604

FACET ENGINEERING
4316 NORTH ELSTON AVENUE
CHICAGO, ILLINOIS 60641

CHICAGO DEPARTMENT OF TRANSPORTATION
DIVISION OF ENGINEERING

STATE / LAKE LOOP ELEVATED STATION
200 NORTH STATE STREET, CHICAGO, IL 60601

LAKE/RANDOLPH SUBWAY PLATFORM LIGHTING PLAN

CDOT PROJECT D-1-209 | DATE: 9/9/2022

SPEC. NO.

DRAWING NO. ES-112

REVISION NO.

NOTES:

1. SEE DRAWING E-001 FOR ELECTRICAL SYMBOL LIST.
2. SEE DRAWING E-002 FOR ELECTRICAL GENERAL NOTES AND ABBREVIATIONS.
3. SEE DRAWING ES-609 FOR MODIFIED SUBWAY FIRE ALARM RISER DIAGRAM.

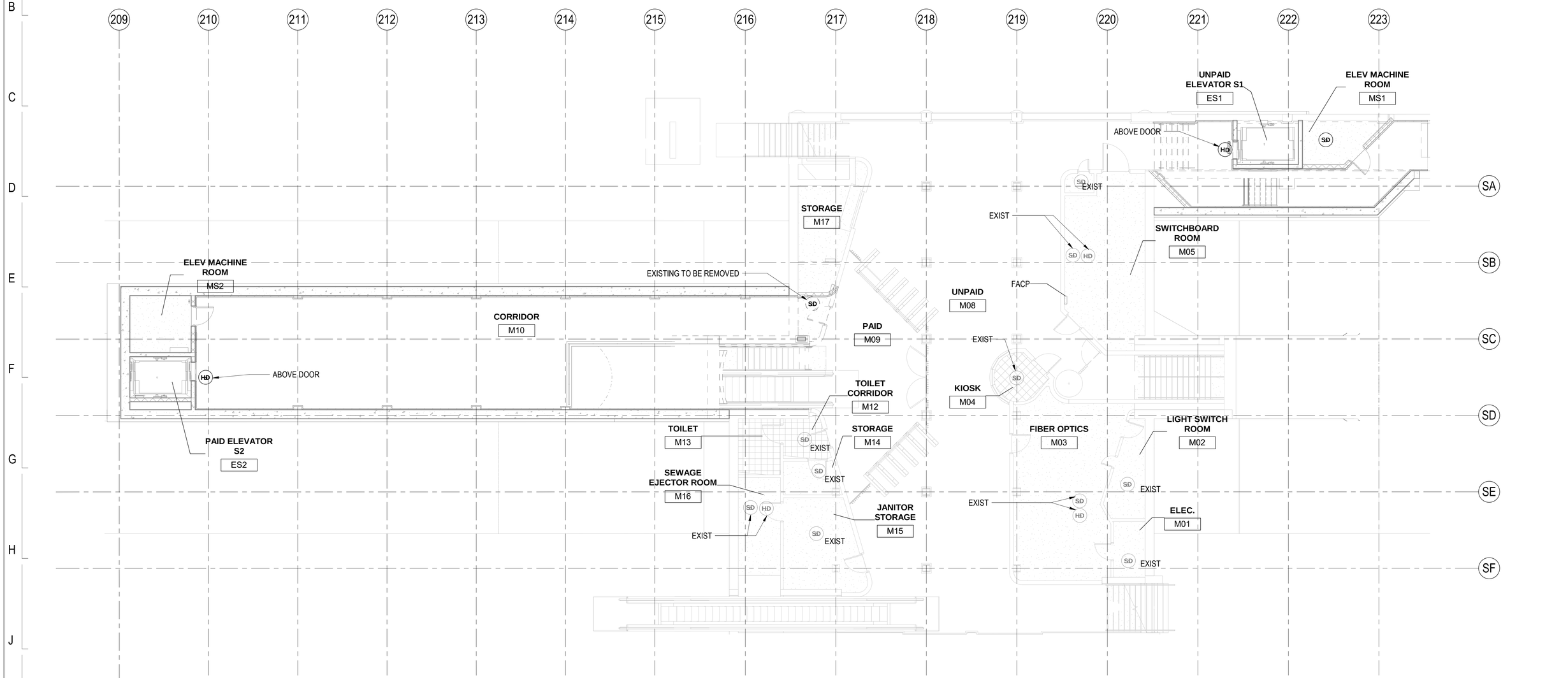

1 SUBWAY MEZZANINE LEVEL - MODIFIED FIRE ALARM PLAN

1/8" = 1'-0"

DESIGN BY:									
DRAWN BY:									
CHECKED BY:									
APPROVED BY:		4	7/3/2023	ISSUED FOR BID	EM	EM	JM		
CDOT/APPROVED BY:		NO.	DATE	REVISIONS	DES.	DRW.	CHK.	DCCO	CDOT

TRANSYSTEMS
222 SOUTH RIVERSIDE PLAZA SUITE 610
CHICAGO, ILLINOIS 60606

SKIDMORE, OWINGS & MERRILL LLP
224 SOUTH MICHIGAN AVENUE, SUITE 1000
CHICAGO, ILLINOIS 60604

FACET ENGINEERING
4316 NORTH ELSTON AVENUE
CHICAGO, ILLINOIS 60641

CHICAGO DEPARTMENT OF TRANSPORTATION
DIVISION OF ENGINEERING

STATE / LAKE LOOP ELEVATED STATION
200 NORTH STATE STREET, CHICAGO, IL 60601

LAKE/RANDOLPH SUBWAY MEZZANINE MODIFIED FIRE ALARM PLAN

CDOT PROJECT D-1-209

DATE: 9/9/2022

SPEC. NO.

DRAWING NO. ES-121

REVISION NO.

NOTES:

1. SEE DRAWING E-001 FOR ELECTRICAL SYMBOL LIST.
2. SEE DRAWING E-002 FOR ELECTRICAL GENERAL NOTES AND ABBREVIATIONS.
3. SEE DRAWING ES-609 FOR MODIFIED SUBWAY FIRE ALARM RISER DIAGRAM.

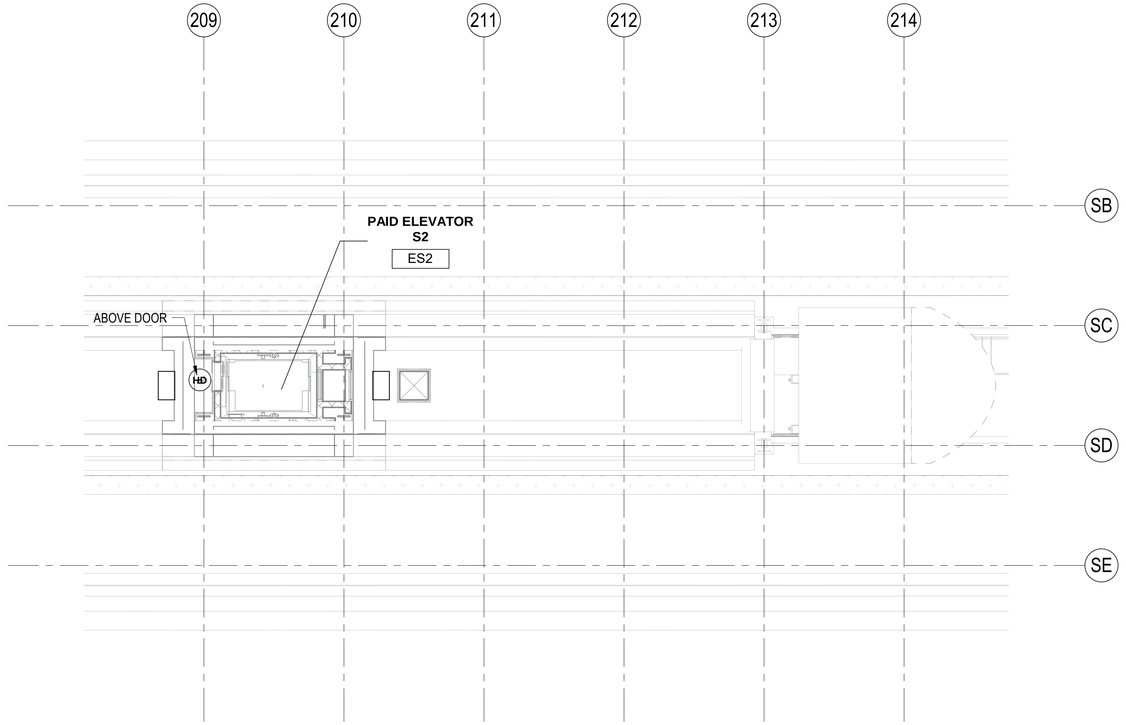

1 SUBWAY PLATFORM LEVEL - FIRE ALARM PLAN
1/8" = 1'-0"

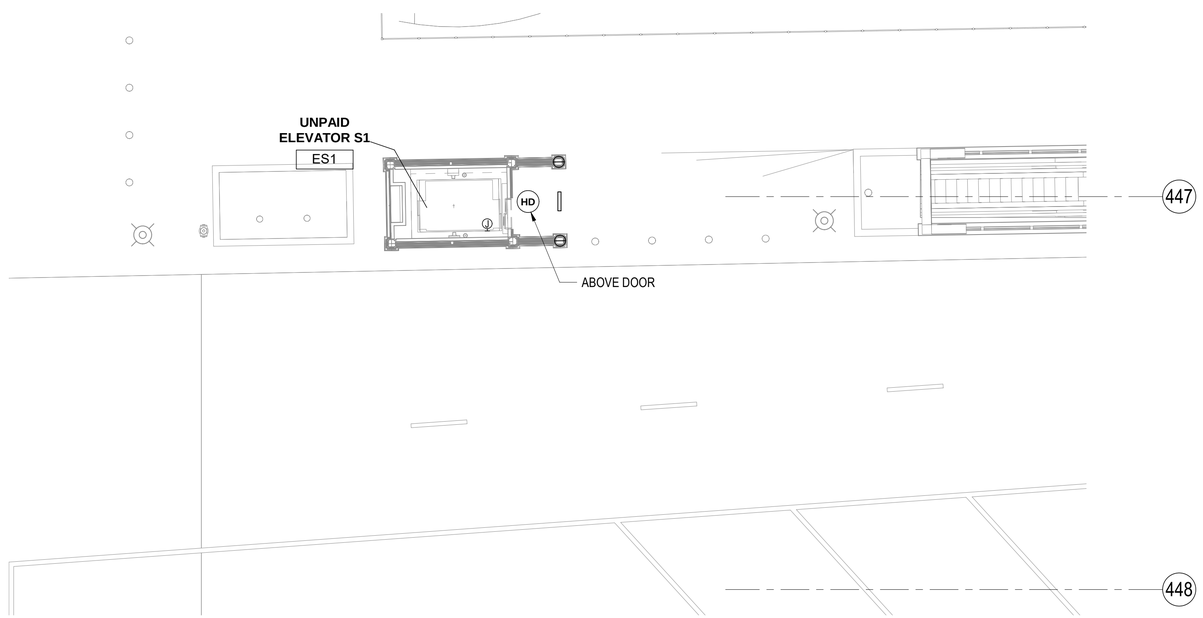

2 SUBWAY STREET LEVEL - FIRE ALARM PLAN
1/8" = 1'-0"

DESIGN BY:										
DRAWN BY:										
CHECKED BY:										
APPROVED BY:		4	7/3/2023	ISSUED FOR BID	EM	EM	JM			
CDOT/APPROVED BY:		NO.	DATE	REVISIONS	DES.	DRW.	CHK.	DCCO	CDOT	

TRANSYSTEMS
222 SOUTH RIVERSIDE PLAZA SUITE 610
CHICAGO, ILLINOIS 60606

SKIDMORE, OWINGS & MERRILL LLP
224 SOUTH MICHIGAN AVENUE, SUITE 1000
CHICAGO, ILLINOIS 60604

FACET ENGINEERING
4316 NORTH ELSTON AVENUE
CHICAGO, ILLINOIS 60641

CHICAGO DEPARTMENT OF TRANSPORTATION
DIVISION OF ENGINEERING

STATE / LAKE LOOP ELEVATED STATION
200 NORTH STATE STREET, CHICAGO, IL 60601

LAKE/RANDOLPH SUBWAY STREET LEVEL AND PLATFORM FIRE ALARM PLANS

CDOT PROJECT D-1-209 | DATE: 9/9/2022

SPEC. NO.

DRAWING NO. ES-122

REVISION NO.

NOTES:

1. SEE DRAWING E-001 FOR ELECTRICAL SYMBOL LIST.
2. SEE DRAWING E-002 FOR ELECTRICAL GENERAL NOTES AND ABBREVIATIONS.
3. SEE DRAWING ES-608 FOR SUBWAY ITC DIAGRAM.

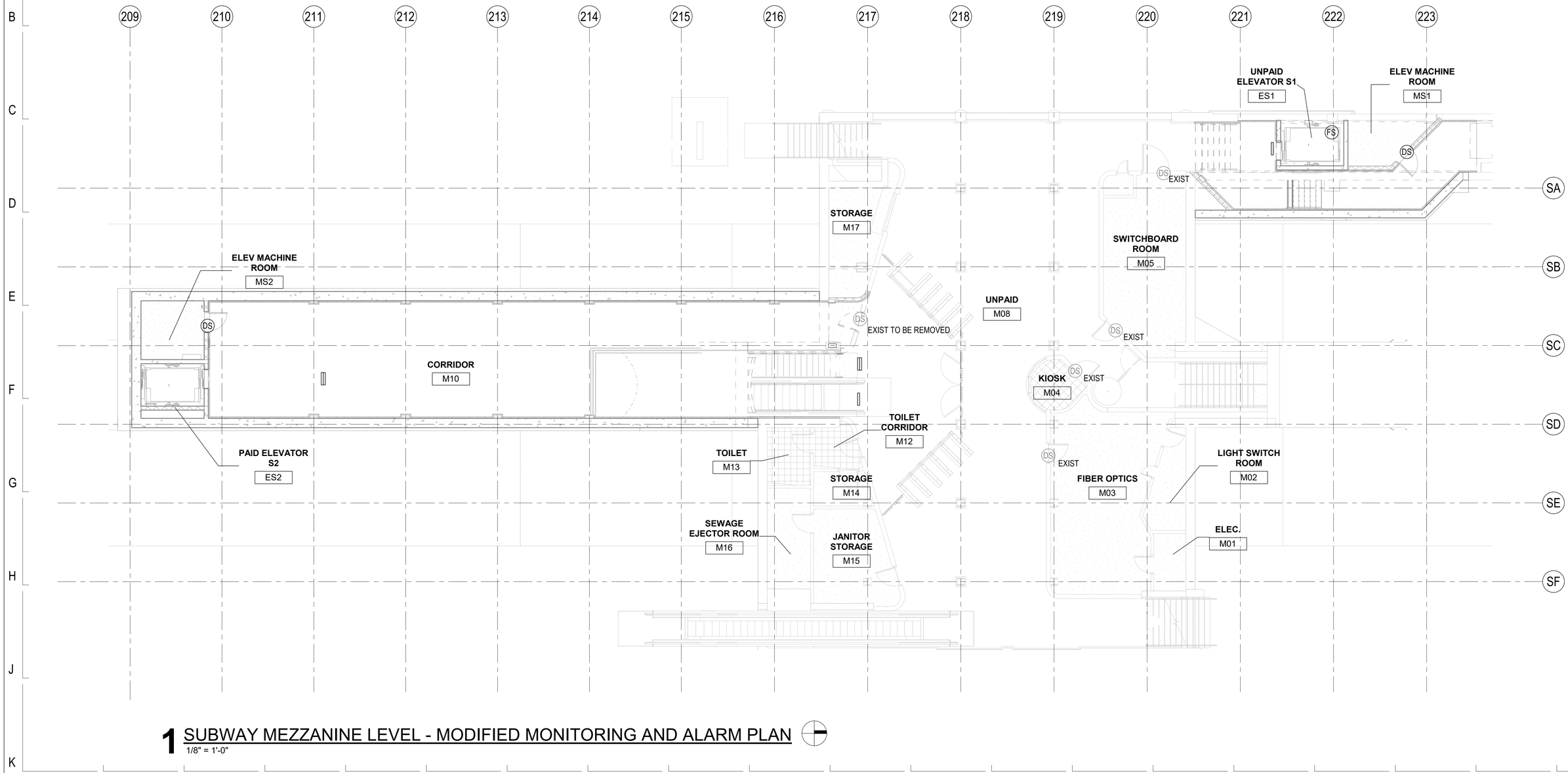

1 SUBWAY MEZZANINE LEVEL - MODIFIED MONITORING AND ALARM PLAN

1/8" = 1'-0"

DESIGN BY:									
DRAWN BY:									
CHECKED BY:									
APPROVED BY:		4	7/3/2023	ISSUED FOR BID	EM	EM	JM		
CDOT/APPROVED BY:		NO.	DATE	REVISIONS	DES.	DRW.	CHK.	DCCO	CDOT

TRANSYSTEMS
222 SOUTH RIVERSIDE PLAZA SUITE 610
CHICAGO, ILLINOIS 60606

SKIDMORE, OWINGS & MERRILL LLP
224 SOUTH MICHIGAN AVENUE, SUITE 1000
CHICAGO, ILLINOIS 60604

FACET ENGINEERING
4316 NORTH ELSTON AVENUE
CHICAGO, ILLINOIS 60641

CHICAGO DEPARTMENT OF TRANSPORTATION
DIVISION OF ENGINEERING

STATE / LAKE LOOP ELEVATED STATION
200 NORTH STATE STREET, CHICAGO, IL 60601

LAKE/RANDOLPH SUBWAY MEZZANINE MONITORING AND ALARM PLAN

CDOT PROJECT D-1-209

DATE: 9/9/2022

SPEC. NO.

DRAWING NO. ES-131

REVISION NO.

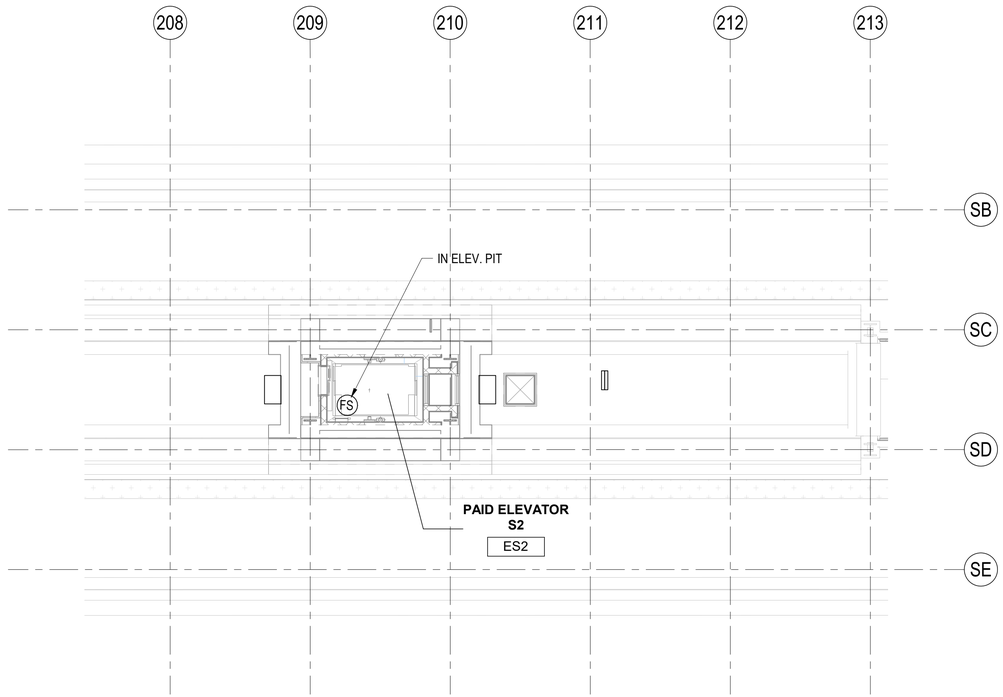

NOTES:

1. SEE DRAWING E-001 FOR ELECTRICAL SYMBOL LIST.
2. SEE DRAWING E-002 FOR ELECTRICAL GENERAL NOTES AND ABBREVIATIONS.
3. SEE DRAWING ES-608 FOR SUBWAY ITC DIAGRAM.

1 SUBWAY PLATFORM LEVEL - MONITORING AND ALARM PLAN

1/8" = 1'-0"

DESIGN BY:										
DRAWN BY:										
CHECKED BY:										
APPROVED BY:		4	7/3/2023	ISSUED FOR BID	EM	EM	JM			
CDOT/APPROVED BY:		NO.	DATE	REVISIONS	DES.	DRW.	CHK.	DCCO	CDOT	

TRANSYSTEMS
222 SOUTH RIVERSIDE PLAZA SUITE 610
CHICAGO, ILLINOIS 60606

SKIDMORE, OWINGS & MERRILL LLP
224 SOUTH MICHIGAN AVENUE, SUITE 1000
CHICAGO, ILLINOIS 60604

FACET ENGINEERING
4316 NORTH ELSTON AVENUE
CHICAGO, ILLINOIS 60641

CHICAGO DEPARTMENT OF TRANSPORTATION
DIVISION OF ENGINEERING

STATE / LAKE LOOP ELEVATED STATION
200 NORTH STATE STREET, CHICAGO, IL 60601

LAKE/RANDOLPH SUBWAY PLATFORM MONITORING AND ALARM PLAN

CDOT PROJECT D-1-209

DATE: 9/9/2022

SPEC. NO.

DRAWING NO. ES-132

REVISION NO.

NOTES:

1. SEE DRAWING E-001 FOR ELECTRICAL SYMBOL LIST.
2. SEE DRAWING E-002 FOR ELECTRICAL GENERAL NOTES AND ABBREVIATIONS.
3. SEE DRAWING E-612 FOR EQUIPMENT SCHEDULE.

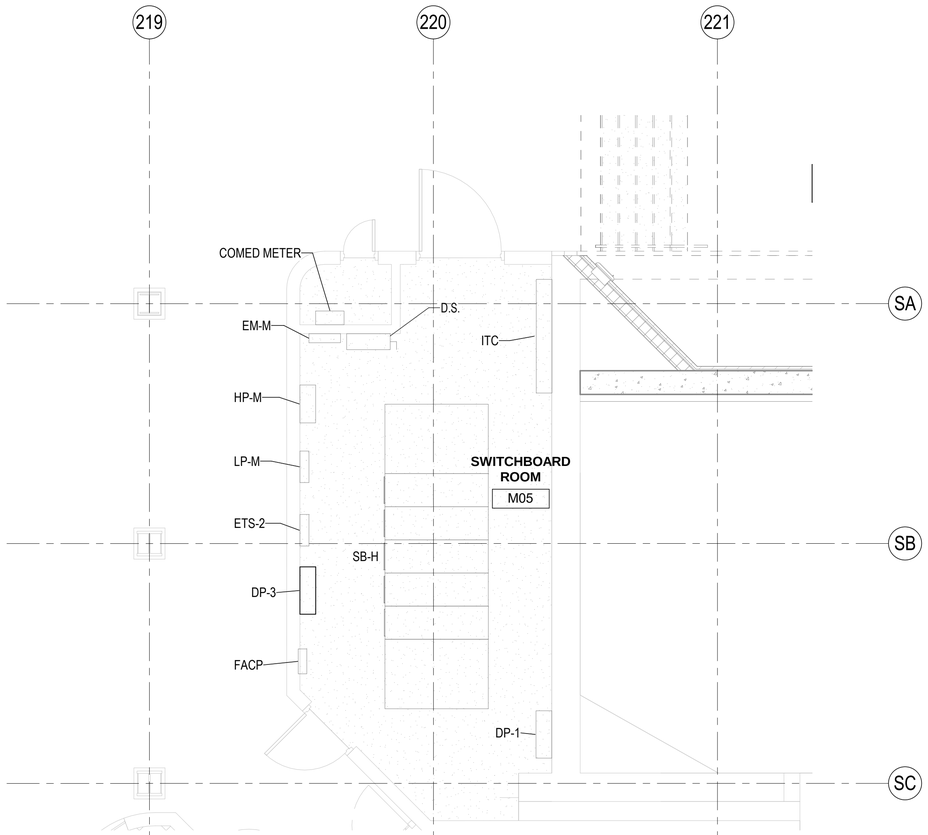

1 SUBWAY MAIN ELECTRICAL ROOM ENLARGED POWER PLAN

1/4" = 1'-0"

DESIGN BY:									
DRAWN BY:									
CHECKED BY:									
APPROVED BY:		4	7/3/2023	ISSUED FOR BID	EM	SM	JM		
CDOT/APPROVED BY:		NO.	DATE	REVISIONS	DES.	DRW.	CHK.	DCCO	CDOT

TRANSYSTEMS
222 SOUTH RIVERSIDE PLAZA SUITE 610
CHICAGO, ILLINOIS 60606

SKIDMORE, OWINGS & MERRILL LLP
224 SOUTH MICHIGAN AVENUE, SUITE 1000
CHICAGO, ILLINOIS 60604

FACET ENGINEERING
4316 NORTH ELSTON AVENUE
CHICAGO, ILLINOIS 60641

CHICAGO DEPARTMENT OF TRANSPORTATION
DIVISION OF ENGINEERING

STATE / LAKE LOOP ELEVATED STATION
200 NORTH STATE STREET, CHICAGO, IL 60601

SUBWAY ENLARGED PLAN - MAIN ELECTRICAL ROOM

CDOT PROJECT D-1-209

DATE: 9/9/2022

SPEC. NO.

DRAWING NO. ES-401

REVISION NO.

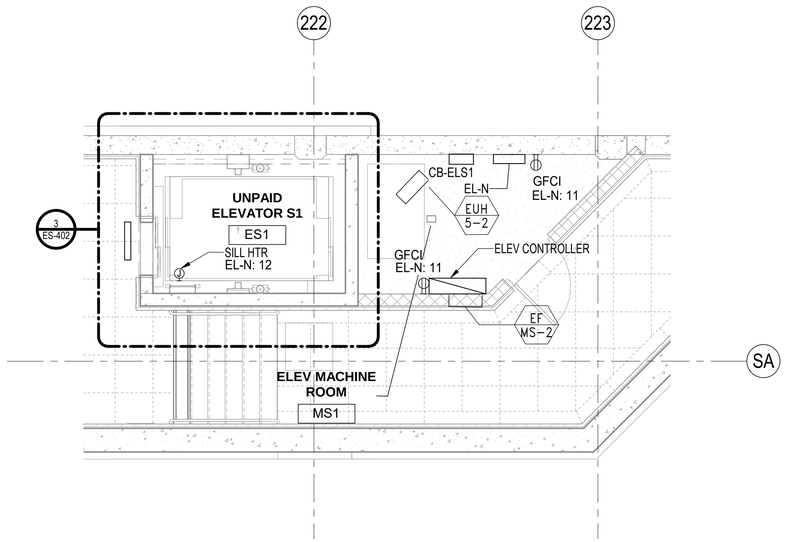

1 SUBWAY NORTH ELEVATOR ENLARGED POWER PLAN
1/4" = 1'-0"

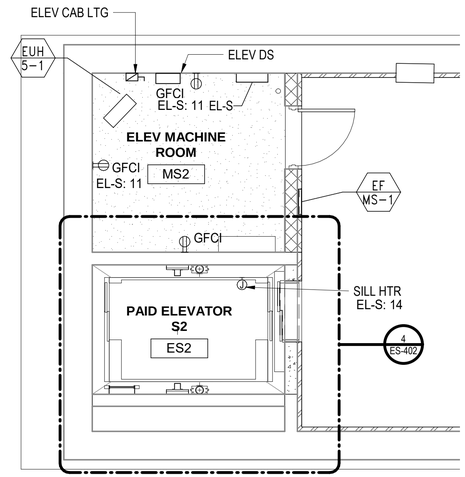

2 SUBWAY SOUTH ELEVATOR ENLARGED POWER PLAN
1/4" = 1'-0"

NOTES:

1. SEE DRAWING E-001 FOR ELECTRICAL SYMBOL LIST.
2. SEE DRAWING E-002 FOR ELECTRICAL GENERAL NOTES AND ABBREVIATIONS.
3. SEE DRAWING E-612 FOR EQUIPMENT SCHEDULE.

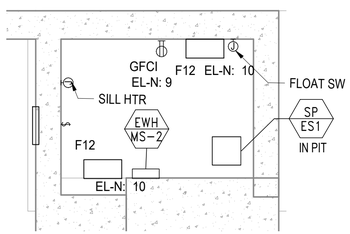

3 SUBWAY NORTH ELEVATOR PIT POWER PLAN
1/4" = 1'-0"

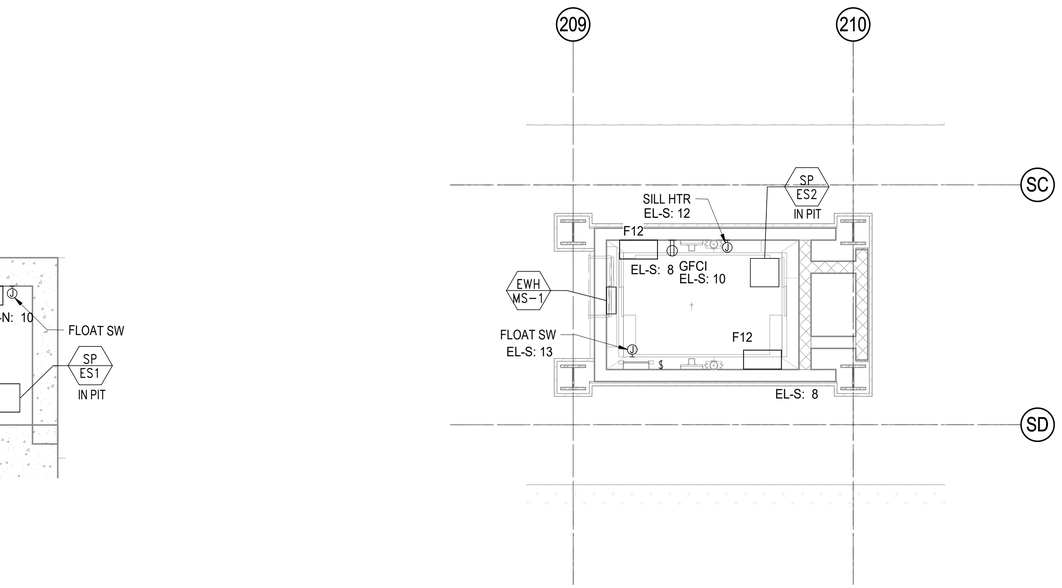

4 SUBWAY SOUTH ELEVATOR PIT POWER PLAN
1/4" = 1'-0"

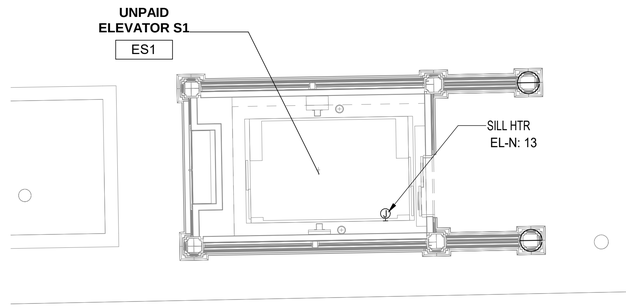

5 SUBWAY STREET LEVEL - POWER PLAN
1/4" = 1'-0"

DESIGN BY:										
DRAWN BY:										
CHECKED BY:										
APPROVED BY:		4	7/3/2023	ISSUED FOR BID	EM	SM	JM			
CDOT/APPROVED BY:		NO.	DATE	REVISIONS	DES.	DRW.	CHK.	DCCO	CDOT	

TRANSYSTEMS
222 SOUTH RIVERSIDE PLAZA SUITE 610
CHICAGO, ILLINOIS 60606

SKIDMORE, OWINGS & MERRILL LLP
224 SOUTH MICHIGAN AVENUE, SUITE 1000
CHICAGO, ILLINOIS 60604

FACET ENGINEERING
4316 NORTH ELSTON AVENUE
CHICAGO, ILLINOIS 60641

CHICAGO DEPARTMENT
OF TRANSPORTATION
DIVISION OF ENGINEERING

STATE / LAKE LOOP ELEVATED STATION
200 NORTH STATE STREET, CHICAGO, IL 60601

SUBWAY ENLARGED PLANS - ELEVATOR ROOMS

CDOT PROJECT D-1-209

DATE: 9/9/2022

SPEC. NO.

DRAWING NO.
ES-402

REVISION NO.

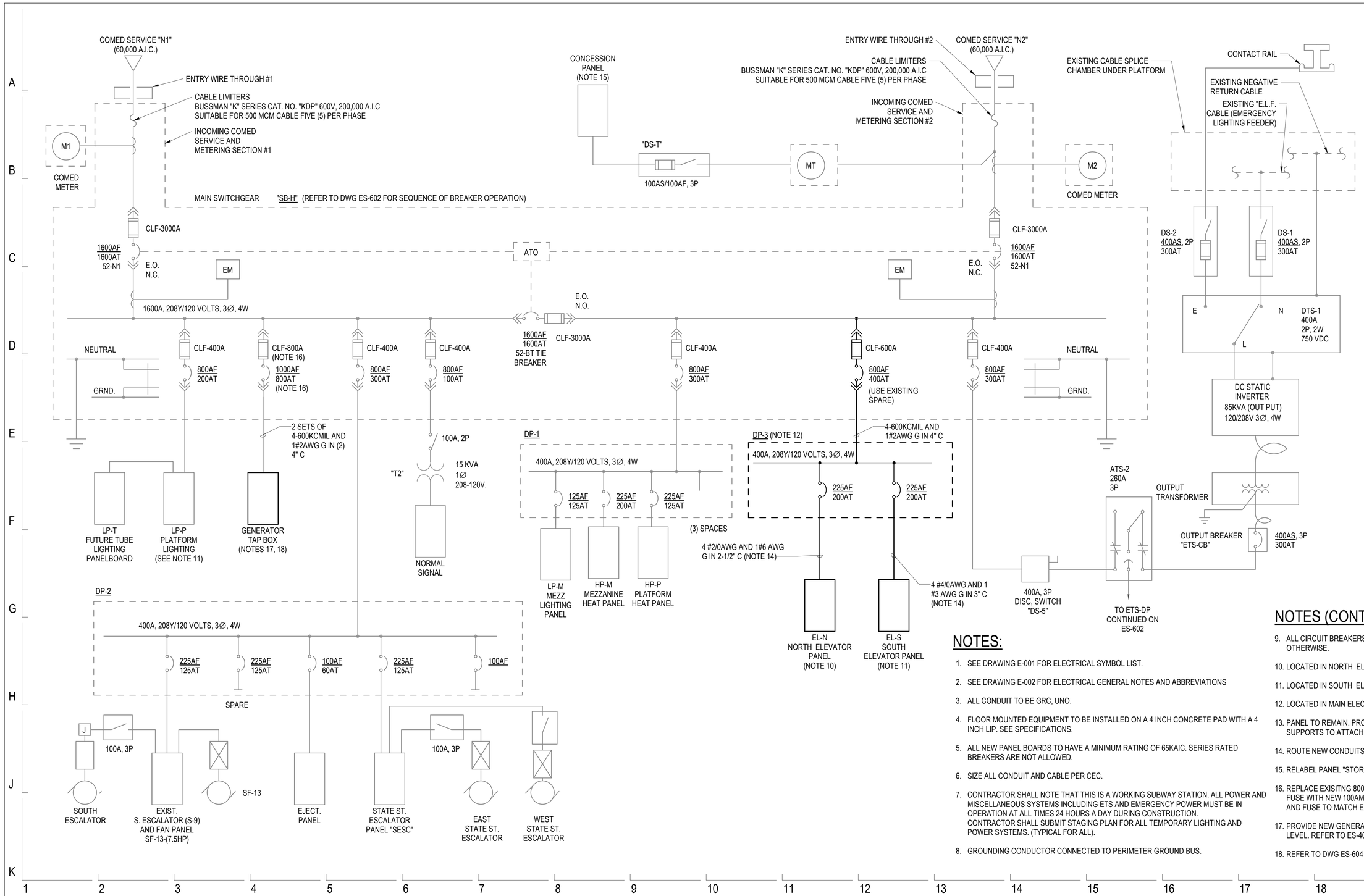

NOTES:

1. SEE DRAWING E-001 FOR ELECTRICAL SYMBOL LIST.
2. SEE DRAWING E-002 FOR ELECTRICAL GENERAL NOTES AND ABBREVIATIONS
3. ALL CONDUIT TO BE GRC, UNO.
4. FLOOR MOUNTED EQUIPMENT TO BE INSTALLED ON A 4 INCH CONCRETE PAD WITH A 4 INCH LIP. SEE SPECIFICATIONS.
5. ALL NEW PANEL BOARDS TO HAVE A MINIMUM RATING OF 65KAIC. SERIES RATED BREAKERS ARE NOT ALLOWED.
6. SIZE ALL CONDUIT AND CABLE PER CEC.
7. CONTRACTOR SHALL NOTE THAT THIS IS A WORKING SUBWAY STATION. ALL POWER AND MISCELLANEOUS SYSTEMS INCLUDING ETS AND EMERGENCY POWER MUST BE IN OPERATION AT ALL TIMES 24 HOURS A DAY DURING CONSTRUCTION. CONTRACTOR SHALL SUBMIT STAGING PLAN FOR ALL TEMPORARY LIGHTING AND POWER SYSTEMS. (TYPICAL FOR ALL).
8. GROUNDING CONDUCTOR CONNECTED TO PERIMETER GROUND BUS.

NOTES (CONT):

9. ALL CIRCUIT BREAKERS ARE THREE POLE, UNLESS NOTED OTHERWISE.
10. LOCATED IN NORTH ELEV MACHINE ROOM.
11. LOCATED IN SOUTH ELEV MACHINE ROOM.
12. LOCATED IN MAIN ELECTRICAL ROOM.
13. PANEL TO REMAIN. PROVIDE FLOOR TO CEILING UNISTRUT SUPPORTS TO ATTACH PANEL AFTER WALL IS REMOVED.
14. ROUTE NEW CONDUITS BELOW FLOOR.
15. RELABEL PANEL "STORAGE RM."
16. REPLACE EXISITNG 800AMP DRAW-OUT CIRCUIT BREAKER AND FUSE WITH NEW 100AMP RATED DRAW-OUT CIRCUIT BREAKER AND FUSE TO MATCH EXISTING EATON SWITCHGEAR.
17. PROVIDE NEW GENERATOR TAP BOX LOCATED AT STREET LEVEL. REFER TO ES-402 FOR LOCATION.
18. REFER TO DWG ES-604 FOR GENERATOR TAP BOX DETAIL.

DESIGN BY:									
DRAWN BY:									
CHECKED BY:									
APPROVED BY:		4	7/3/2023	ISSUED FOR BID	EM	SM	JM		
CDOT/APPROVED BY:		NO.	DATE	REVISIONS	DES.	DRW.	CHK.	DCCO	CDOT

TRANSYSTEMS
222 SOUTH RIVERSIDE PLAZA SUITE 610
CHICAGO, ILLINOIS 60606

SKIDMORE, OWINGS & MERRILL LLP
224 SOUTH MICHIGAN AVENUE, SUITE 1000
CHICAGO, ILLINOIS 60604

FACET ENGINEERING
4316 NORTH ELSTON AVENUE
CHICAGO, ILLINOIS 60641

CHICAGO DEPARTMENT OF TRANSPORTATION
DIVISION OF ENGINEERING

STATE / LAKE LOOP ELEVATED STATION
200 NORTH STATE STREET, CHICAGO, IL 60601

SPEC. NO.

LAKE/RANDOLPH SUBWAY ELECTRICAL SINGLE LINE - MODIFICATIONS - PART 1

DRAWING NO.
ES-601

CDOT PROJECT D-1-209

DATE: 9/9/2022

REVISION NO.

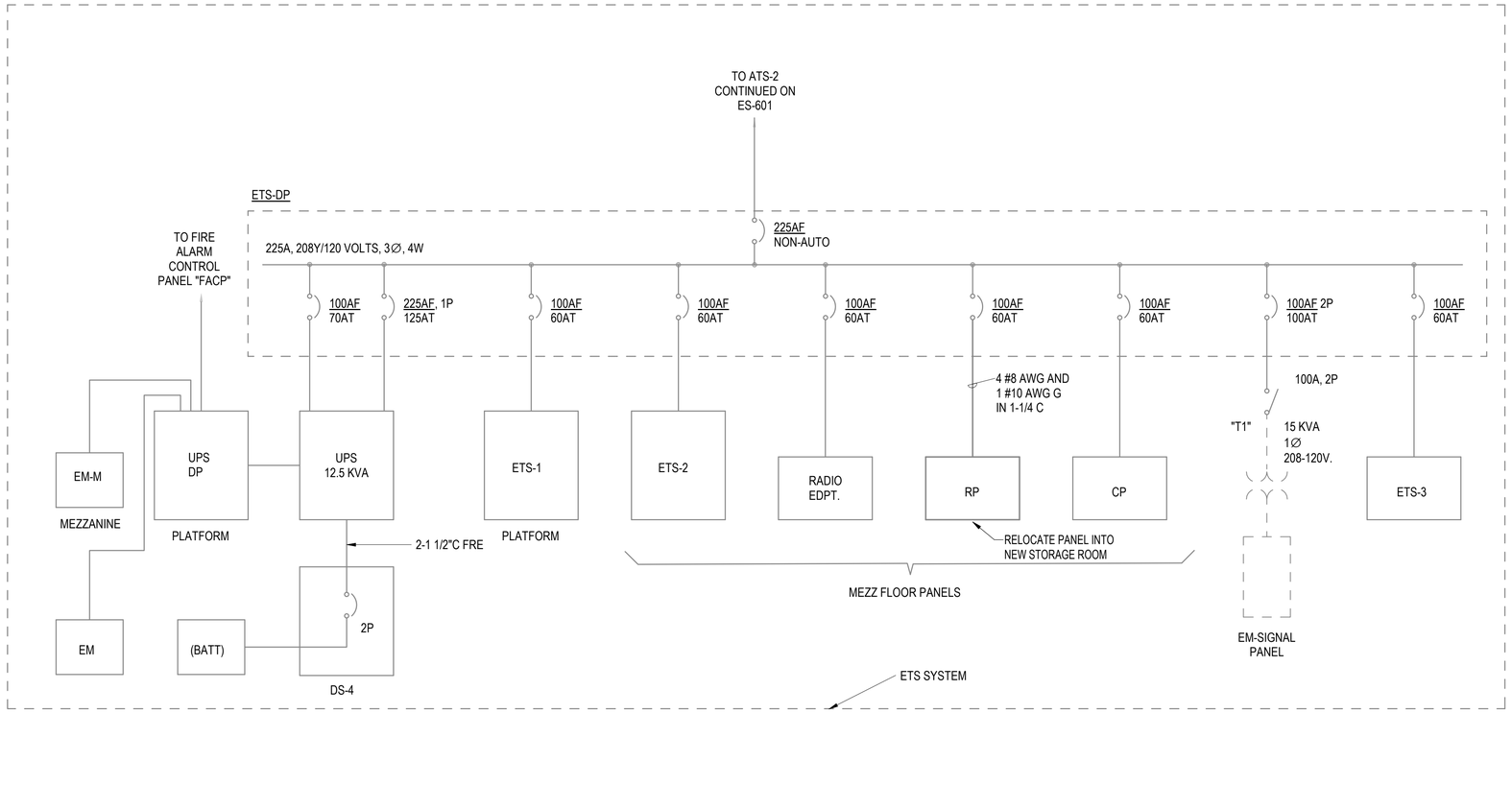

EXISTING
SEQUENCE OF BREAKER OPERATION
MAIN SWITCHGEAR "SB-H"

NORMAL CONDITIONS:
MAIN BREAKER 52-N1 IS NORMALLY CLOSED
MAIN BREAKER 52-N2 IS NORMALLY CLOSED
TIE BREAKER 52-BT IS NORMALLY OPEN

AUTOMATIC OPERATION:

LOSS OF SOURCE VOLTAGE TO 52-N1
1. TIME DELAY 5 SECONDS (TIMER 62-1)
2. 52-N1 OPENS
3. 52-BT CLOSES

RETURN OF SOURCE VOLTAGE TO 52-N1
1. TIME DELAY 3 SECONDS (TIMER 2-1)
2. 52-BT OPENS
3. 52-N1 CLOSES

LOSS OF SOURCE VOLTAGE TO 52-N2 WITH GOOD VOLTAGE TO 52-N1, BUT TIMER 2-1 HAS NOT TIMED OUT 3 MINUTES
1. 52-N2 OPENS
2. 52-N1 CLOSES
3. 52-BT REMAINS CLOSED

LOSS OF SOURCE VOLTAGE TO 52-N2
1. TIME DELAY 5 SECONDS (TIMER 62-2)
2. 52-N2 OPENS
3. 52-BT CLOSES

RETURN OF SOURCE VOLTAGE TO 52-N2
1. TIME DELAY 3 SECONDS (TIMER 2-2)
2. 52-BT OPENS
3. 52-N2 CLOSES

LOSS OF SOURCE VOLTAGE TO 52-N1 WITH GOOD VOLTAGE TO 52-N2, BUT TIMER 2-2 HAS NOT TIMED OUT 3 MINUTES
1. 52-N1 OPENS
2. 52-N2 CLOSES
3. 52-BT REMAINS CLOSED

DESIGN BY:										TranSystems	SOM	FACET ENGINEERING DBE/MBE CERTIFIED Mechanical • Electrical • Communication • SCADA • Traction Power Performance • Respect • Initiation • Dedication • Experience		CDOT	STATE / LAKE LOOP ELEVATED STATION 200 NORTH STATE STREET, CHICAGO, IL 60601	SPEC. NO.
DRAWN BY:																
CHECKED BY:															LAKE/RANDOLPH SUBWAY ELECTRICAL SINGLE LINE MODIFICATIONS - PART 2	DRAWING NO. ES-602
APPROVED BY:		4	7/3/2023	ISSUED FOR BID	EM	SM	JM									
CDOT/APPROVED BY:		NO.	DATE	REVISIONS	DES.	DRW.	CHK.	DCCO	CDOT	TRANSYSTEMS 222 SOUTH RIVERSIDE PLAZA SUITE 610 CHICAGO, ILLINOIS 60606	SKIDMORE, OWINGS & MERRILL LLP 224 SOUTH MICHIGAN AVENUE, SUITE 1000 CHICAGO, ILLINOIS 60604	FACET ENGINEERING 4316 NORTH ELSTON AVENUE CHICAGO, ILLINOIS 60641		CHICAGO DEPARTMENT OF TRANSPORTATION DIVISION OF ENGINEERING	CDOT PROJECT D-1-209	DATE: 9/9/2022	REVISION NO.

Branch Panel: EL-N

Location: ELEV MACHINE ROOM MS1
Supply From:
Mounting: Surface
Enclosure: Type 12

Volts: 120/208 Wye
Phases: 3
Wires: 4

A.I.C. Rating:
Mains Type: MCB
Mains Rating: 150 A
MCB Rating: 150 A

CKT	Circuit Description	Trip	Poles	A		B		C		Poles	Trip	Circuit Description	CKT
1	HVAC	20 A	3	1334...	696 VA					1	20 A	EF-MS-2	2
3	--	--	--			1334...	1334...			3	20 A	EWH-MS-2	4
5	--	--	--					1334...	1334...	--	--	--	6
7	SP-ES1	20 A	1	1176...	1334...					--	--	--	8
9	PIT RECEPT	20 A	1			180 VA	105 VA			1	20 A	PIT LIGHTING	10
11	Receptacle	20 A	1					360 VA	1000...	1	20 A	N. ELEV SILL HEATER	12
13	STREET LVL SILL HTR	20 A	1	1000...									14
15													16
17													18
19													20
21													22
23													24
25													26
27													28
29													30
31													32
33													34
35													36
		Total Load:		5540 VA		2953 VA		4028 VA					
		Total Amps:		48 A		25 A		35 A					

Load Classification	Connected Load	Demand Factor	Estimated Demand	Panel Totals	
HVAC	8701 VA	100.00%	8701 VA		
Heating	2000 VA	100.00%	2000 VA	**Total Conn. Load:**	12522 VA
Lighting	105 VA	100.00%	105 VA	**Total Est. Demand:**	12522 VA
Receptacle	540 VA	100.00%	540 VA	**Total Conn. Current:**	35 A
Sump Pump	1176 VA	100.00%	1176 VA	**Total Est. Demand Current:**	35 A

Notes:

Branch Panel: EL-S

Location: ELEV MACHINE ROOM MS2
Supply From:
Mounting: Surface
Enclosure: Type 12

Volts: 120/208 Wye
Phases: 3
Wires: 4

A.I.C. Rating:
Mains Type: MCB
Mains Rating: 150 A
MCB Rating: 150 A

CKT	Circuit Description	Trip	Poles	A		B		C		Poles	Trip	Circuit Description	CKT
1	EF-MS-1	20 A	1	696 VA	1334...					3	20 A	EUH-5-1	2
3	EWH-MS-1	20 A	3			1334...	1334...			--	--	--	4
5	--	--	--					1334...	1334...	--	--	--	6
7	--	--	--	1334...	105 VA					1	20 A	PIT LIGHTING	8
9	SP-ES2	20 A	1			1176...	180 VA			1	20 A	PIT RECEPT	10
11	ELEV MACH RM RECEPT	20 A	1					360 VA	1000...	1	20 A	PLATFORM SILL HEATER	12
13	SOUTH ELEV FLOAT SWITCH	20 A	1	500 VA	1000...					1	20 A	S. ELEV MEZZ SILL HEATER	14
15													16
17													18
19													20
21													22
23													24
25													26
27													28
29													30
31													32
33													34
35													36
		Total Load:		4969 VA		4024 VA		4028 VA					
		Total Amps:		41 A		34 A		34 A					

Load Classification	Connected Load	Demand Factor	Estimated Demand	Panel Totals	
HVAC	8701 VA	100.00%	8701 VA		
Heating	2000 VA	100.00%	2000 VA	**Total Conn. Load:**	13022 VA
Lighting	105 VA	100.00%	105 VA	**Total Est. Demand:**	13022 VA
Other	500 VA	100.00%	500 VA	**Total Conn. Current:**	36 A
Receptacle	540 VA	100.00%	540 VA	**Total Est. Demand Current:**	36 A
Sump Pump	1176 VA	100.00%	1176 VA		

Notes:

DESIGN BY:										
DRAWN BY:										
CHECKED BY:										
APPROVED BY:		4	7/3/2023	ISSUED FOR BID	JM	EM	JM			
CDOT/APPROVED BY:		NO.	DATE	REVISIONS	DES.	DRW.	CHK.	DCCO	CDOT	

TRANSYSTEMS
222 SOUTH RIVERSIDE PLAZA SUITE 610
CHICAGO, ILLINOIS 60606

SKIDMORE, OWINGS & MERRILL LLP
224 SOUTH MICHIGAN AVENUE, SUITE 1000
CHICAGO, ILLINOIS 60604

FACET ENGINEERING
4316 NORTH ELSTON AVENUE
CHICAGO, ILLINOIS 60641

CHICAGO DEPARTMENT OF TRANSPORTATION
DIVISION OF ENGINEERING

STATE / LAKE LOOP ELEVATED STATION
200 NORTH STATE STREET, CHICAGO, IL 60601

LAKE/RANDOLPH SUBWAY ELECTRICAL PANEL SCHEDULES

CDOT PROJECT D-1-209

DATE: 9/9/2022

SPEC. NO.

DRAWING NO. ES-603

REVISION NO.

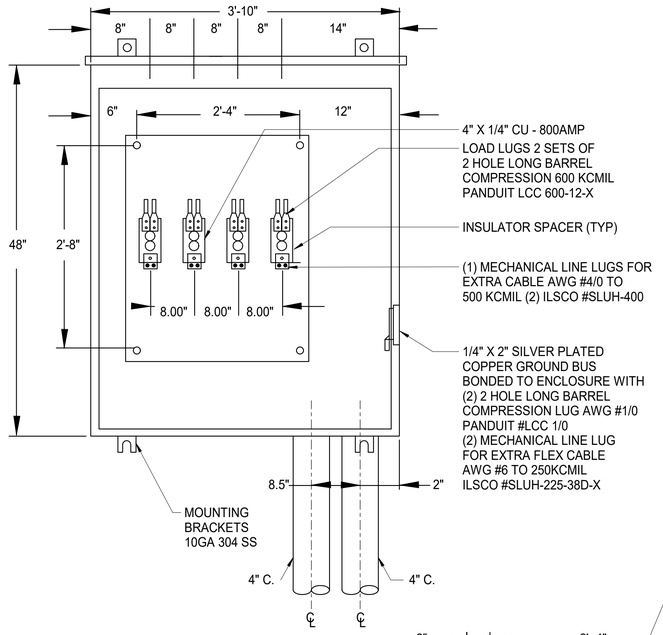

OPEN VIEW

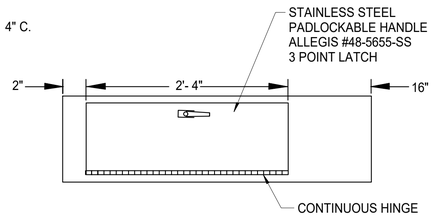

BOTTOM VIEW

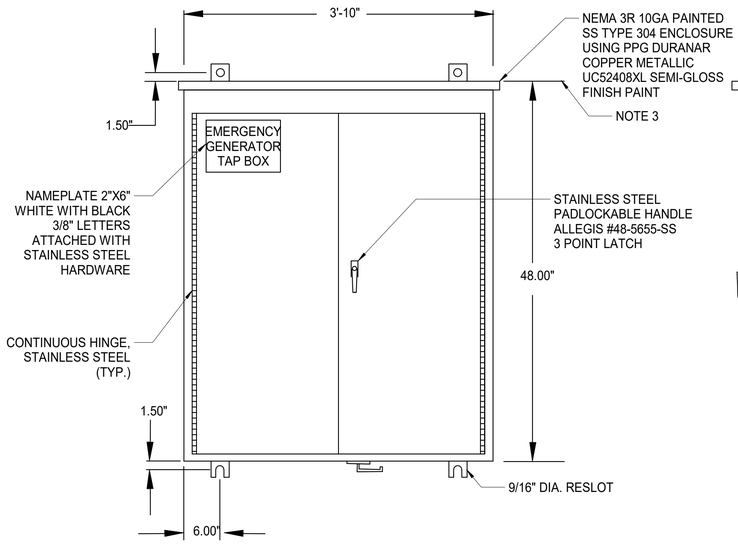

FRONT VIEW

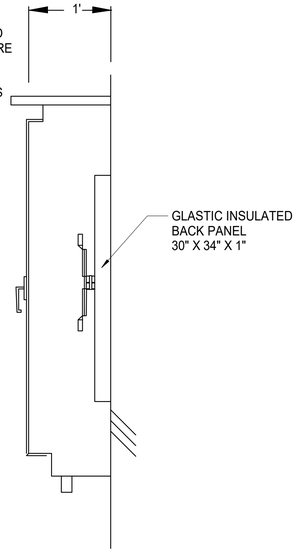

SECTION

1 GENERATOR TAP BOX DETAIL SUBWAY
NTS

DESIGN BY:										
DRAWN BY:										
CHECKED BY:										
APPROVED BY:		4	7/3/2023	ISSUED FOR BID	JM	EM	SM			
CDOT/APPROVED BY:		NO.	DATE	REVISIONS	DES.	DRW.	CHK.	DCCO	CDOT	

TRANSYSTEMS
222 SOUTH RIVERSIDE PLAZA SUITE 610
CHICAGO, ILLINOIS 60606

SKIDMORE, OWINGS & MERRILL LLP
224 SOUTH MICHIGAN AVENUE, SUITE 1000
CHICAGO, ILLINOIS 60604

FACET ENGINEERING
4316 NORTH ELSTON AVENUE
CHICAGO, ILLINOIS 60641

CHICAGO DEPARTMENT
OF TRANSPORTATION
DIVISION OF ENGINEERING

STATE / LAKE LOOP ELEVATED STATION
200 NORTH STATE STREET, CHICAGO, IL 60601

GENERATOR TAP BOX DETAIL - SUBWAY

CDOT PROJECT D-1-209

DATE: 9/9/2022

SPEC. NO.

DRAWING NO.
ES-604

REVISION NO.

NOTES:

1. SEE DRAWING E-001 FOR ELECTRICAL SYMBOL LIST.
2. SEE DRAWING E-002 FOR ELECTRICAL GENERAL NOTES AND ABBREVIATIONS.
3. LOCATED IN MEZZANINE ELECTRICAL SWITCHGEAR ROOM.

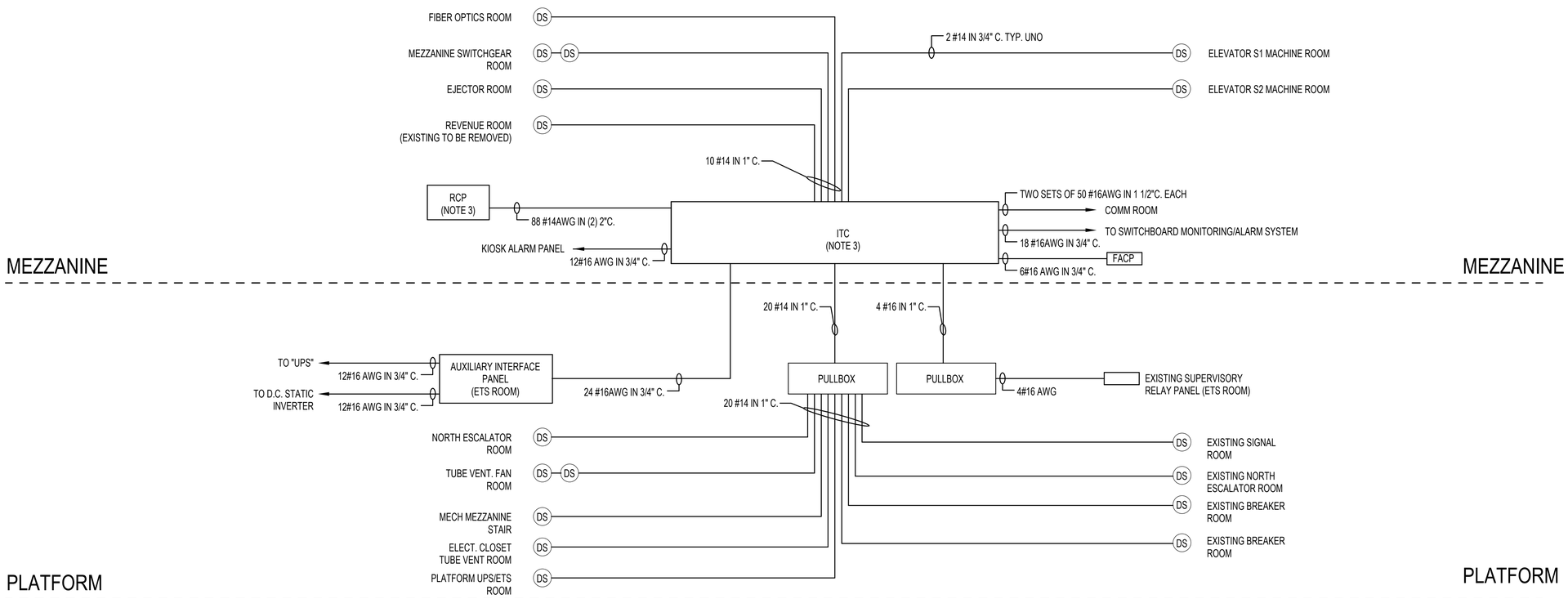

MONITOR AND ALARM

DESIGN BY:										
DRAWN BY:										
CHECKED BY:										
APPROVED BY:		4	7/3/2023	ISSUED FOR BID	EM	EM	JM			
CDOT/APPROVED BY:		NO.	DATE	REVISIONS	DES.	DRW.	CHK.	DCCO	CDOT	

TRANSYSTEMS
222 SOUTH RIVERSIDE PLAZA SUITE 610
CHICAGO, ILLINOIS 60606

SKIDMORE, OWINGS & MERRILL LLP
224 SOUTH MICHIGAN AVENUE, SUITE 1000
CHICAGO, ILLINOIS 60604

FACET ENGINEERING
4316 NORTH ELSTON AVENUE
CHICAGO, ILLINOIS 60641

CHICAGO DEPARTMENT OF TRANSPORTATION
DIVISION OF ENGINEERING

STATE / LAKE LOOP ELEVATED STATION
200 NORTH STATE STREET, CHICAGO, IL 60601

LAKE/RANDOLPH SUBWAY ITC DIAGRAM

CDOT PROJECT D-1-209

DATE: 9/9/2022

SPEC. NO.

DRAWING NO. ES-608

REVISION NO.

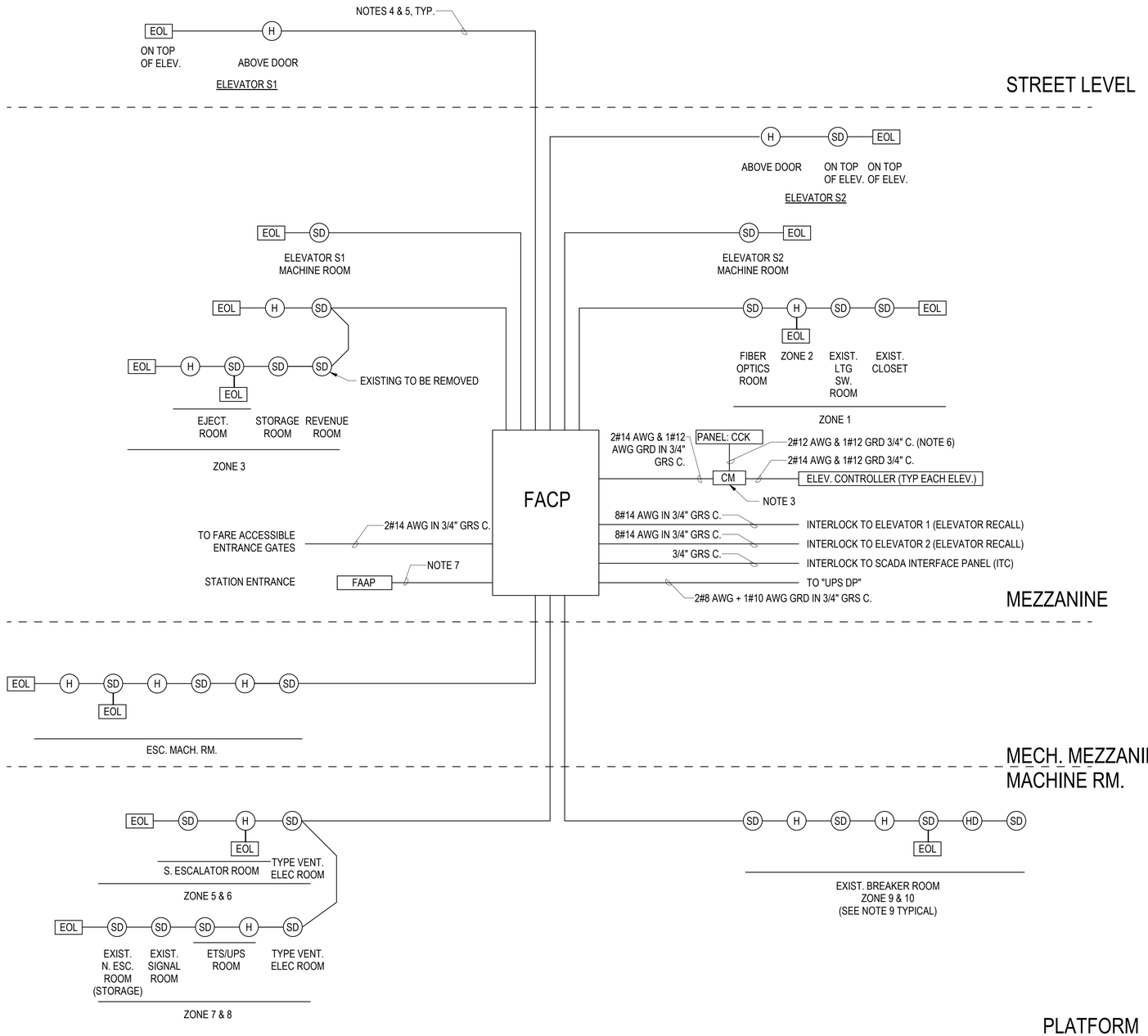

NOTES:

1. SEE DRAWING E-001 FOR ELECTRICAL SYMBOL LIST.
2. SEE DRAWING E-002 FOR ELECTRICAL GENERAL NOTES AND ABBREVIATIONS.
3. CONTROL MODULE TO INTERFACE WITH ELEVATOR EQUIPMENT. PROVIDE AS NEEDED. COORDINATE WITH ELEVAOTOR MANUFACTURER.
4. WIRING FOR EQUIPMENT IS 2#14 AWG TYPICAL U.N.O.
5. ALL CONDUITS SHALL BE MINIMUM 3/4" GRS, U.N.O.
6. SEE PLAN DRAWINGS FOR PANEL AND CIRCUIT NUMBERS..
7. PROVIDE CABLE PER MANUFACTURER REQUIREMENTS IN MINIMUM 3/4" GRS C.
8. PROVIDE ADDITIONAL DEVICES PER BUREAU OF FIRE PREVENTION.
9. HEAT DETECTOR ZONE SHALL BE SEPERATE FROM SMOKE DETECTOR ZONE.
10. PROVIDE ADDITIONAL ELEVATOR RECALL MODULES FOR TWO NEW ELEVATORS.

DESIGN BY:										
DRAWN BY:										
CHECKED BY:										
APPROVED BY:		4	7/3/2023	ISSUED FOR BID	EM	EM	JM			
CDOT/APPROVED BY:		NO.	DATE	REVISIONS	DES.	DRW.	CHK.	DCCO	CDOT	

TRANSYSTEMS
222 SOUTH RIVERSIDE PLAZA SUITE 610
CHICAGO, ILLINOIS 60606

SKIDMORE, OWINGS & MERRILL LLP
224 SOUTH MICHIGAN AVENUE, SUITE 1000
CHICAGO, ILLINOIS 60604

FACET ENGINEERING
DBE/MBE CERTIFIED
Performance • Respect • Initiation • Dedication • Experience
FACET ENGINEERING
4316 NORTH ELSTON AVENUE
CHICAGO, ILLINOIS 60641

CHICAGO DEPARTMENT OF TRANSPORTATION
DIVISION OF ENGINEERING

STATE / LAKE LOOP ELEVATED STATION
200 NORTH STATE STREET, CHICAGO, IL 60601

LAKE/RANDOLPH SUBWAY MODIFIED FIRE ALARM RISER DIAGRAM

CDOT PROJECT D-1-209

DATE: 9/9/2022

SPEC. NO.

DRAWING NO. ES-609

REVISION NO.

ABBREVIATIONS:

ALCL	- ALUMINUM CLAD CONTACT RAIL
ALT	- ALTERNATE
ANR	- AUXILIARY NEGATIVE RAIL
℄	- CENTER LINE
CNTL	- CONTROL
EC	- ELECTRICAL CONTRACTOR
ELF	- EMERGENCY LIGHTING FEED
HH	- HANDHOLE
IB	- IMPEDANCE BOND
IJ	- INSULATED JOINT
LB	- POUND
MH	- MANHOLE
NB	- NORTH BOUND
N.C.	- NORMALLY CLOSED
NE	- NEGATIVE ENCLOSURE
NEG	- NEGATIVE
N.O.	- NORMALLY OPEN
NOR	- NORMAL
NTS	- NOT TO SCALE
PI	- POINT OF INCLINE (CONTACT RAIL)
PLTF	- PLATFORM
POS	- POSITIVE
PS	- POINT OF SWITCH (TRACK)
ROW	- RIGHT OF WAY
SB	- SOUTH BOUND
SEC	- SECTION (FEEDER)
SG	- SECTION GAP
SHC	- SPECIAL HIGH CONDUCTIVITY CONTACT RAIL
SIG	- STEEL INSIDE GUARD
SPDT	- SINGLE POLE DOUBLE THROW
STA	- STATION
STP	- STANDARD TRACTION POWER
SW	- SWITCH
TP	- TRACTION POWER
TRK	- TRACK
TYP.	- TYPICAL
W.P.	- WORK POINT
XB	- CROSS BOND
XBANR	- CROSS BOND ANR
XBS	- CROSS BOND TO STRUCTURE
XBSIG	- CROSS BOND TO SIG-STEEL INSIDE GUARD

ELECTRICAL SYMBOLS:

- CABLE
- CIRCUIT BREAKER
- KNIFE SWITCH
- ISOLATION GAP
- SIGNAL BOND
- IMPEDANCE BOND
- STRUCTURE GROUND
- CABLE INSULATOR
- CABLE INSULATOR (DEAD END)
- POTHEAD-THRU DECK
- SLEEVES BELOW RAIL
- CABLE ORIENTATION (CABLES)
- FUSE
- CONNECTION
- NUMBER ABOVE CONTACT RAIL INDICATES FEEDER SECTION NUMBER (58)
- SUBSTATION POS BUS (RECTIFIER)
- SUBSTATION NEG BUS (RECTIFIER)
- STRINGER MOUNTING BRACKET
- CONTACT RAIL TAP

RAIL SYMBOLS:

- BASE RAIL (SIG OR ANR)
- ALCLAD ANR (OR)
- RUNNING RAILS
- 85 POUND ALCL CONTACT RAIL
- 85 POUND CONTACT RAIL (FEEDER DIAGRAMS)
- 144 POUND SHC CONTACT RAIL
- 144 POUND SHC CONTACT RAIL (FEEDER DIAGRAMS)
- 74 POUND ALCL CONTACT RAIL
- 74 POUND RAIL (FEEDER DIAGRAM)
- 80 POUND ALCL CONTACT RAIL
- 80 POUND RAIL (FEEDER DIAGRAMS)
- 85 POUND BASE CONTACT RAIL
- CONTACT RAIL INCLINE (LENGTH 12FT/6FT PER STP'S)
- CONTACT RAIL ANCHOR

MISCELLANEOUS SYMBOLS:

- ELEVATED STRUCTURE STEEL
- TURNOUT
- DIAMOND CROSSOVER
- PASSENGER STATION
- APPROXIMATE STATIONING (180)

CABLE SIZE IDENTIFIERS

- 1500 Kcmil CABLE
- 1000 Kcmil CABLE
- 500 Kcmil CABLE

NOTES:

1. ALL MAIN LINE RUNS AND "LAP" CONTACT RAILS SHALL UTILIZE 3.66 m (12'-0") INCLINES.
2. ALL "LEAD/KICK" OR "YARD" CONTACT RAILS SHALL UTILIZE 1.83m (6'-0") INCLINES.
3. ENGLISH UNIT DIMENSIONS, FEET AND INCHES SHOWN IN PARENTHESES (FT-IN).
4. ANR IS 74 LB/Y OR 85 LB/Y ALUMINUM CLAD CONTACT RAIL.
5. PROVIDE SUFFICIENT CABLE SLACK AT ALL CONTACT RAIL TAPS TO ALLOW FOR 305 mm (1'-0") RAIL TRAVEL IN EACH DIRECTION.
6. STATIONING SHOWN IS ON CENTERLINE OF TRACK.
7. MEASUREMENTS FROM BENTS ARE NOTED AS POSITIVE WHEN THE MEASUREMENT IS AWAY FROM THE LOOP AND NEGATIVE WHEN THE MEASUREMENT IS TOWARD THE LOOP.
8. THE TRACTION POWER DRAWINGS ARE TO READ IN CONJUNCTION WITH THE PROJECT SPECIFICATIONS AND ALL OTHER DRAWINGS RELATED TO THE PERFORMANCE OF WORK.
9. THE PROJECT SPECIFICATIONS AND DRAWINGS FORM THE BASIS OF THE CONTRACT REQUIREMENTS AND INCLUDE THE TYPE AND GRADE OF MATERIALS TO BE INSTALLED, EQUIPMENT TO BE FURNISHED, THE MANNER BY WHICH TO BE INSTALLED AND WHERE TO BE LOCATED. IN THE EVENT A CONFLICT BETWEEN THE PROJECT SPECIFICATIONS AND DRAWINGS, SPECIFICATIONS GOVERN UNLESS OTHERWISE DIRECTED BY THE AUTHORITY.
10. TRACTION POWER DRAWINGS ARE DIAGRAMMATIC IN NATURE. NO DIMENSIONS ARE TO BE SCALED OFF DRAWINGS.
11. ALL CONDUIT CROSSING STRUCTURAL EXPANSION JOINTS SHALL BE PROVIDED WITH EXPANSION/DEFLECTION FITTINGS.
12. NO PART OF THE CONTRACT DOCUMENTS SHALL BE CONSIDERED RELEASED FOR CONSTRUCTION UNLESS SPECIFICALLY LABELED "ISSUED FOR CONSTRUCTION".
13. THE DRAWINGS AND SPECIFICATIONS REPRESENT THE FINISHED CONDITION AND DO NOT INDICATE THE MEANS AND METHODS FOR CONSTRUCTION.
14. THE CONTRACTOR SHALL PROVIDE ALL TEMPORARY WORK NECESSARY TO MAINTAIN EXISTING SERVICES AND INSTALL NEW WORK.
15. ALL DETAILS, SECTIONS, AND NOTES ON DRAWINGS ARE INTENDED TO BE TYPICAL FOR WHERE CONDITIONS ARE SIMILAR TO THOSE INDICATED BY DETAIL, DETAIL TITLE, OR NOTE.
16. ALL TRACTION POWER CABLES MUST MAINTAIN MINIMUM 2" SEPARATION BETWEEN CABLES AND OTHER STRUCTURES OR MATERIALS.

DESIGN BY:										
DRAWN BY:										
CHECKED BY:										
APPROVED BY:		4	7/3/2023	ISSUED FOR BID	BJ	SRM	SM			
CDOT/APPROVED BY:		NO.	DATE	REVISIONS	DES.	DRW.	CHK.	DCCO	CDOT	

TRANSYSTEMS
222 SOUTH RIVERSIDE PLAZA SUITE 610
CHICAGO, ILLINOIS 60606

SKIDMORE, OWINGS & MERRILL LLP
224 SOUTH MICHIGAN AVENUE, SUITE 1000
CHICAGO, ILLINOIS 60604

FACET ENGINEERING
4316 NORTH ELSTON AVENUE
CHICAGO, ILLINOIS 60641

CHICAGO DEPARTMENT OF TRANSPORTATION
DIVISION OF ENGINEERING

STATE / LAKE LOOP ELEVATED STATION
200 NORTH STATE STREET, CHICAGO, IL 60601

TRACTION POWER ABBREVIATIONS, SYMBOLS, AND GENERAL NOTES

CDOT PROJECT D-1-209 | DATE: 9/9/2022

SPEC. NO.

DRAWING NO. ET-001

REVISION NO.

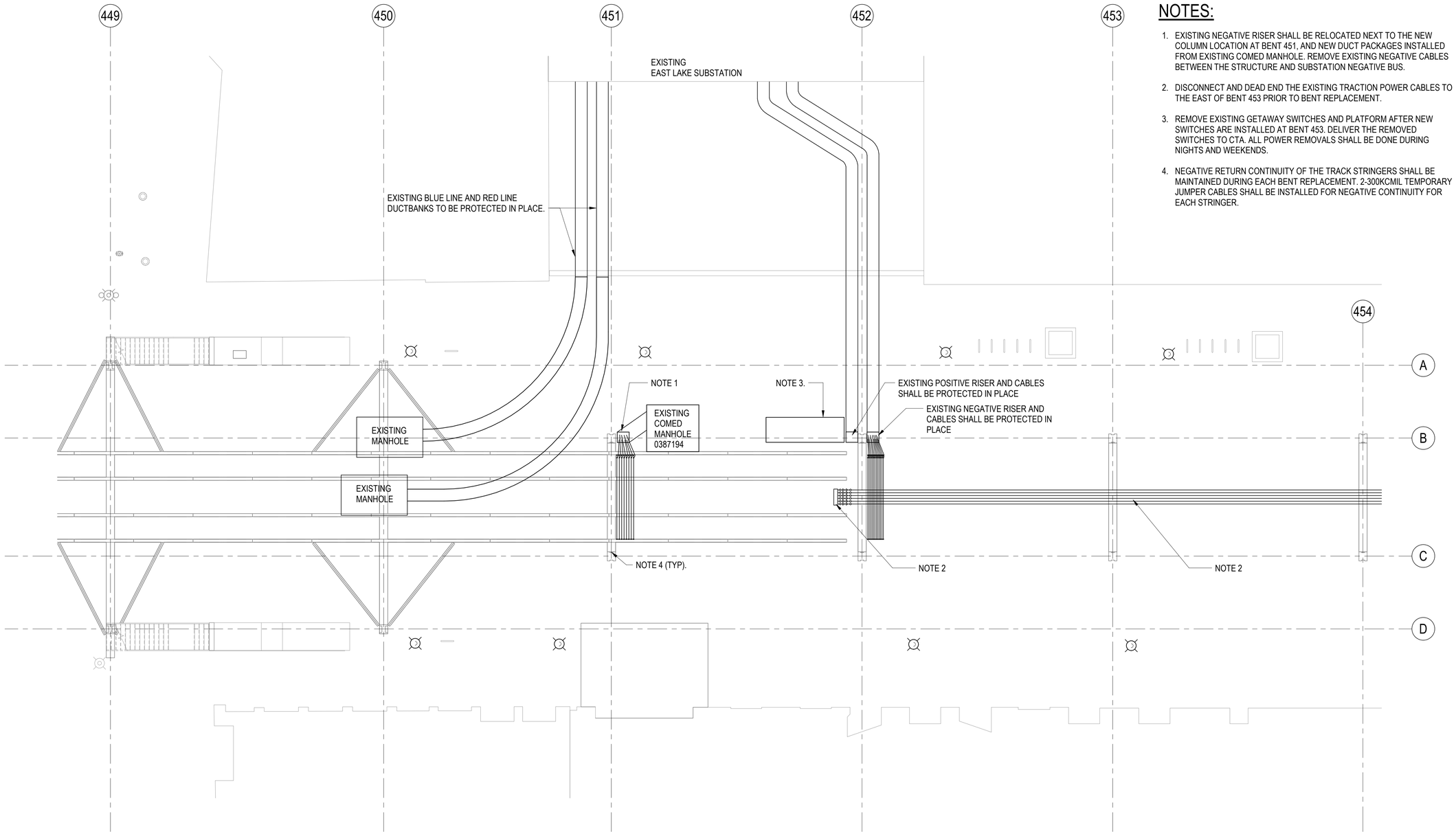

NOTES:

1. EXISTING NEGATIVE RISER SHALL BE RELOCATED NEXT TO THE NEW COLUMN LOCATION AT BENT 451, AND NEW DUCT PACKAGES INSTALLED FROM EXISTING COMED MANHOLE. REMOVE EXISTING NEGATIVE CABLES BETWEEN THE STRUCTURE AND SUBSTATION NEGATIVE BUS.
2. DISCONNECT AND DEAD END THE EXISTING TRACTION POWER CABLES TO THE EAST OF BENT 453 PRIOR TO BENT REPLACEMENT.
3. REMOVE EXISTING GETAWAY SWITCHES AND PLATFORM AFTER NEW SWITCHES ARE INSTALLED AT BENT 453. DELIVER THE REMOVED SWITCHES TO CTA. ALL POWER REMOVALS SHALL BE DONE DURING NIGHTS AND WEEKENDS.
4. NEGATIVE RETURN CONTINUITY OF THE TRACK STRINGERS SHALL BE MAINTAINED DURING EACH BENT REPLACEMENT. 2-300KCMIL TEMPORARY JUMPER CABLES SHALL BE INSTALLED FOR NEGATIVE CONTINUITY FOR EACH STRINGER.

1 TRACTION POWER SITE PLAN - EXISTING

1" = 10'-0"

LAKE ST. KEY PLAN:

DESIGN BY:									
DRAWN BY:									
CHECKED BY:									
APPROVED BY:		4	7/3/2023	ISSUED FOR BID	BJ	EM	SM		
CDOT/APPROVED BY:		NO.	DATE	REVISIONS	DES.	DRW.	CHK.	DCCO	CDOT

TRANSYSTEMS
222 SOUTH RIVERSIDE PLAZA SUITE 610
CHICAGO, ILLINOIS 60606

SKIDMORE, OWINGS & MERRILL LLP
224 SOUTH MICHIGAN AVENUE, SUITE 1000
CHICAGO, ILLINOIS 60604

FACET ENGINEERING
4316 NORTH ELSTON AVENUE
CHICAGO, ILLINOIS 60641

CHICAGO DEPARTMENT
OF TRANSPORTATION
DIVISION OF ENGINEERING

STATE / LAKE LOOP ELEVATED STATION
200 NORTH STATE STREET, CHICAGO, IL 60601

TRACTION POWER - EXISTING SITE PLAN

CDOT PROJECT D-1-209

DATE: 9/9/2022

SPEC. NO.

DRAWING NO.
ET-101

REVISION NO.

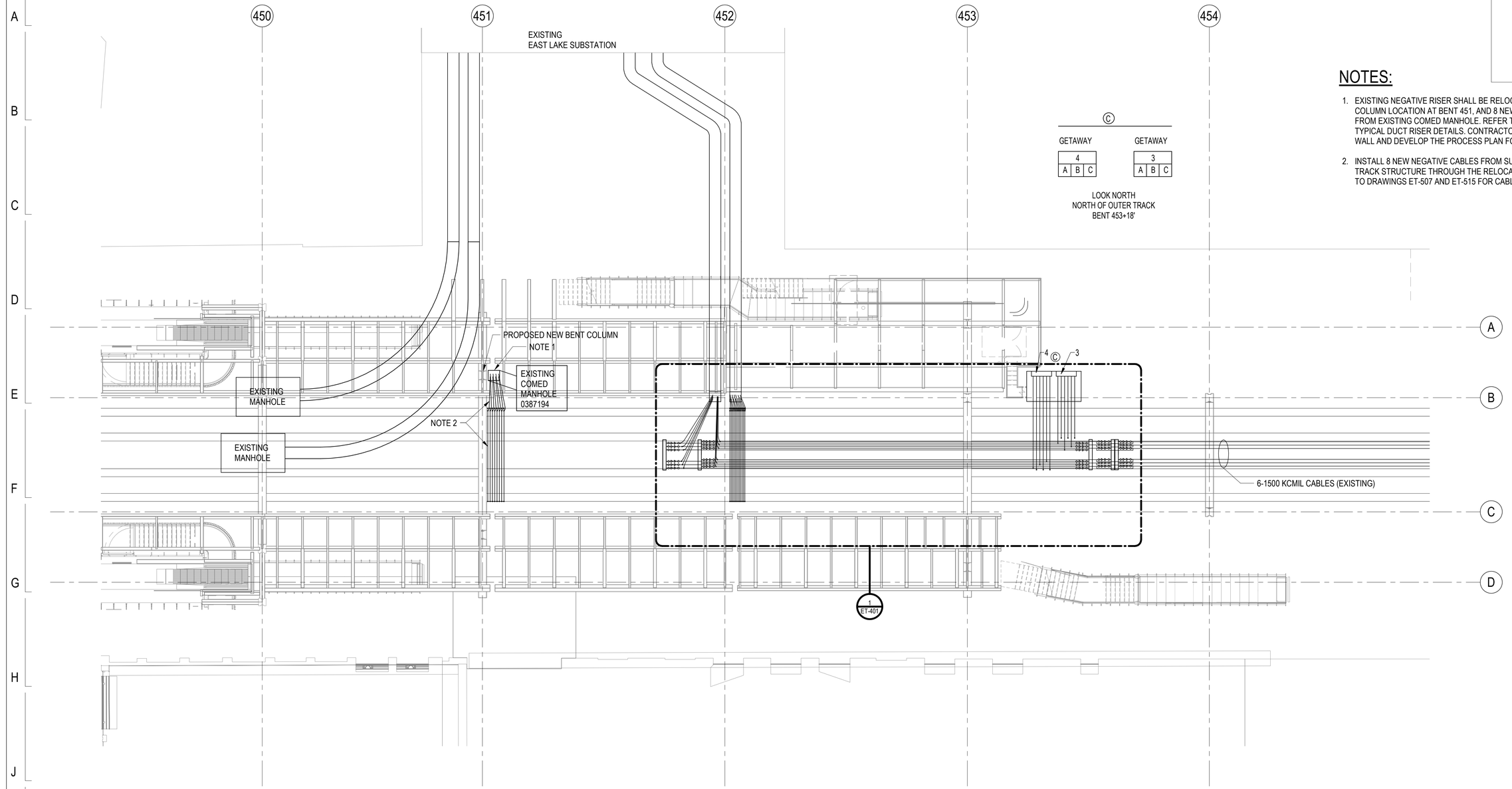

NOTES:

1. EXISTING NEGATIVE RISER SHALL BE RELOCATED NEXT TO THE NEW COLUMN LOCATION AT BENT 451, AND 8 NEW DUCT PACKAGES INSTALLED FROM EXISTING COMED MANHOLE. REFER TO DRAWING ET-518 FOR TYPICAL DUCT RISER DETAILS. CONTRACTOR TO CORE THE MANHOLE WALL AND DEVELOP THE PROCESS PLAN FOR DUCT INSTALLATION.
2. INSTALL 8 NEW NEGATIVE CABLES FROM SUBSTATION NEGATIVE BUS TO TRACK STRUCTURE THROUGH THE RELOCATED NEGATIVE RISER. REFER TO DRAWINGS ET-507 AND ET-515 FOR CABLE CONNECTION DETAILS.

1 TRACTION POWER SITE PLAN - PROPOSED

1" = 10'-0"

LAKE ST. KEY PLAN:

DESIGN BY:										
DRAWN BY:										
CHECKED BY:										
APPROVED BY:		4	7/3/2023	ISSUED FOR BID	BJ	EM	SM			
CDOT/APPROVED BY:		NO.	DATE	REVISIONS	DES.	DRW.	CHK.	DCCO	CDOT	

TRANSYSTEMS
222 SOUTH RIVERSIDE PLAZA SUITE 610
CHICAGO, ILLINOIS 60606

SKIDMORE, OWINGS & MERRILL LLP
224 SOUTH MICHIGAN AVENUE, SUITE 1000
CHICAGO, ILLINOIS 60604

FACET ENGINEERING
4316 NORTH ELSTON AVENUE
CHICAGO, ILLINOIS 60641

CHICAGO DEPARTMENT
OF TRANSPORTATION
DIVISION OF ENGINEERING

STATE / LAKE LOOP ELEVATED STATION
200 NORTH STATE STREET, CHICAGO, IL 60601

TRACTION POWER - PROPOSED SITE PLAN

CDOT PROJECT D-1-209

DATE: 9/9/2022

SPEC. NO.

DRAWING NO.
ET-102

REVISION NO.

NOTES:

1. MAINTAIN MINIMUM 2" SEPERATION BETWEEN CABLES AND BETWEEN CABLE AND STRUCTURE. CABLE DEAD END NOT SHOWN FOR CLARITY.

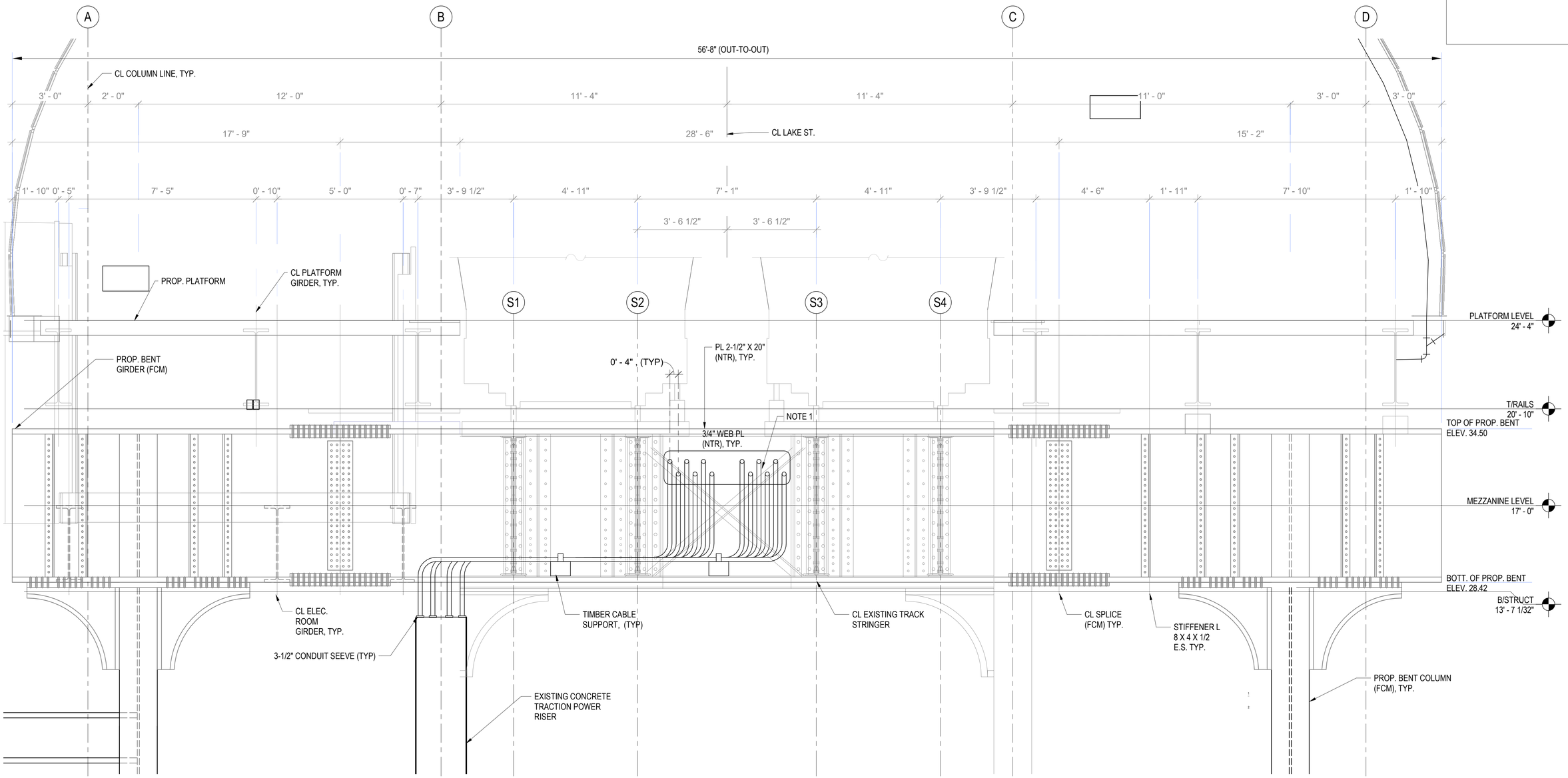

1 ELEVATION VIEW - BENT 452 (LOOKING EAST)

1/2" = 1'-0"

DESIGN BY:										
DRAWN BY:										
CHECKED BY:										
APPROVED BY:		4	7/3/2023	ISSUED FOR BID	BJ	SRM	SM			
CDOT/APPROVED BY:		NO.	DATE	REVISIONS	DES.	DRW.	CHK.	DCCO	CDOT	

TRANSYSTEMS
222 SOUTH RIVERSIDE PLAZA SUITE 610
CHICAGO, ILLINOIS 60606

SKIDMORE, OWINGS & MERRILL LLP
224 SOUTH MICHIGAN AVENUE, SUITE 1000
CHICAGO, ILLINOIS 60604

FACET ENGINEERING
4316 NORTH ELSTON AVENUE
CHICAGO, ILLINOIS 60641

CHICAGO DEPARTMENT OF TRANSPORTATION
DIVISION OF ENGINEERING

STATE / LAKE LOOP ELEVATED STATION
200 NORTH STATE STREET, CHICAGO, IL 60601

SPEC. NO.

TRACTION POWER - BENT 452 ELEVATION

DRAWING NO. ET-301

CDOT PROJECT D-1-209

DATE: 9/9/2022

REVISION NO.

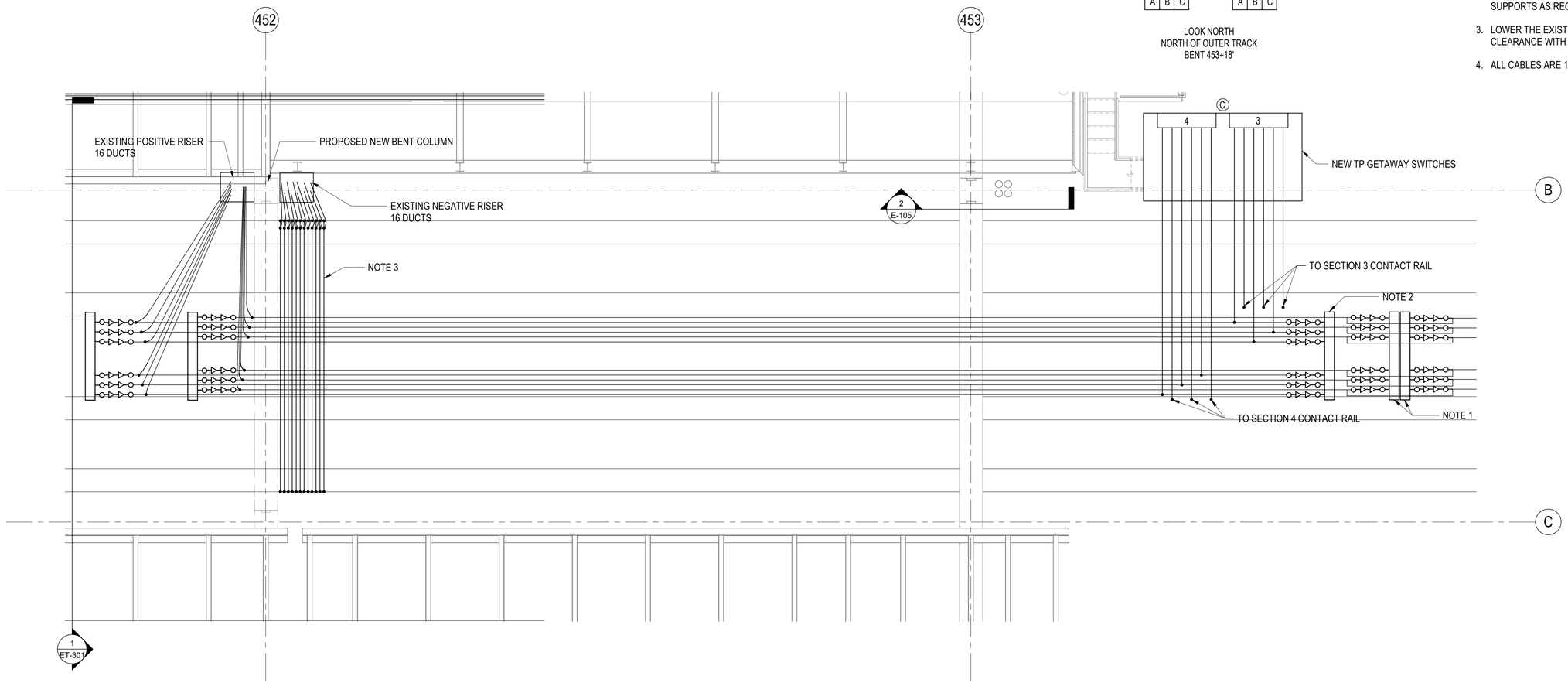

NOTES:

1. INSTALL DEAD ENDS EAST OF BENT 453 PRIOR TO BENT REPLACEMENT. REINSTALL CABLES THROUGH THE OPENINGS IN NEW BENTS 452 AND 453. REFER TO ET-504 THRU ET-506 FOR DEAD END AND T-TAP DETAILS.
2. DEAD END AND INSTALL 6 NEW CABLES BETWEEN EXISTING RISER AND NEW SWITCH PLATFORM THROUGH THE NEW BENT OPENINGS. T-TAP EXISTING CABLES FROM RISER TO THE NEW CABLES. PROVIDE CABLE SUPPORTS AS REQUIRED.
3. LOWER THE EXISTING NEGATIVE CABLES TO MAINTAIN MINIMUM 2" CLEARANCE WITH THE POSITIVE CABLES ABOVE.
4. ALL CABLES ARE 1500KCMIL UNLESS NOTED OTHERWISE.

1 TRACTION POWER ENLARGED CABLE AND CONDUIT PLAN - PROPOSED

1/4" = 1'-0"

LAKE ST. KEY PLAN:

DESIGN BY:									
DRAWN BY:									
CHECKED BY:									
APPROVED BY:		4	7/3/2023	ISSUED FOR BID	BJ	SRM	SM		
CDOT/APPROVED BY:		NO.	DATE	REVISIONS	DES.	DRW.	CHK.	DCCO	CDOT

TRANSYSTEMS
222 SOUTH RIVERSIDE PLAZA SUITE 610
CHICAGO, ILLINOIS 60606

SKIDMORE, OWINGS & MERRILL LLP
224 SOUTH MICHIGAN AVENUE, SUITE 1000
CHICAGO, ILLINOIS 60604

FACET ENGINEERING
4316 NORTH ELSTON AVENUE
CHICAGO, ILLINOIS 60641

CHICAGO DEPARTMENT
OF TRANSPORTATION
DIVISION OF ENGINEERING

STATE / LAKE LOOP ELEVATED STATION
200 NORTH STATE STREET, CHICAGO, IL 60601

TRACTION POWER - ENLARGED PLAN PROPOSED
CABLE AND CONDUIT

CDOT PROJECT D-1-209

DATE: 9/9/2022

SPEC. NO.

DRAWING NO.
ET-401

REVISION NO.

SYMBOL LEGEND

- ALUMINUM CLAD CONTACT RAIL, DETAIL "1", DRAWINGS STP–111, STP–113
- BASE CONTACT RAIL, DETAIL "1" AND DETAIL "2" DRAWING STP–106
- CONTACT RAIL INCLINE, DETAIL "2" OR "3", DRAWING STP–108
- CONTACT RAIL ANCHOR, STP–713, STP–714, STP–715, STP–716, STP–818.
- CONTACT RAIL CHAIR, DETAIL "1" STP–100 OR DETAIL "8" STP–102.
- CONTACT RAIL TAP, DETAIL "1", DRAWING STP–118.
- CABLE, 1/C, 1000 V DC, SIZE AS NOTED.
- CABLE SPLICE, DETAIL "5", DRAWING STP–201.
- CABLE TAP, DETAIL "7", DRAWING STP–201.
- KNIFE SWITCH, 600 A, 800 V DC, SPST, DRAWING STP–301.
- KNIFE SWITCH, 600 A, 800 V DC, SPDT, DRAWING STP–302.
  KNIFE SWITCH, 1200 A, 800 V DC, SPDT, DRAWING STP–303.
- KNIFE SWITCH, 1200 A, 800 V DC, SPST, DRAWING STP–300.
- DETAIL/ELEVATION NUMBER (1,2,3,...) OR SECTION LETTER (A,B,C,...).
- DRAWING NUMBER(S) WHERE DETAIL/ELEVATION OR SECTION IS SHOWN OR REFERRED.
- SECTION LETTER (A,B,C,...) OR ELEVATION NUMBER (1,2,3,...).
- DRAWING NUMBER WHERE SECTION OR ELEVATION IS SHOWN.
- TYPICAL CONTINUATION CABLE INSTALLATION, DETAIL "1", DRAWING STP–704 OR STP–705.
- TYPICAL ISOLATING GAP CONNECTION, DETAIL "1", DRAWING STP–707 OR STP–708.
- POSITIVE CABLE DEAD END, DETAIL "1", DRAWING STP–203.
- DEAD END TIMBER, DETAIL "1" OR DETAIL "2", DRAWING STP–202.
- SPOOL TYPE INSULATOR CABLE SUPPORT DETAILS "6" OR "7", DRAWING STP–210.

ABBREVIATIONS

ALUM.	ALUMINUM
BT.	BENT
CA.	CABLE
CAB.	CABINET
CAT	CATALOG
C, COND.	CONDUIT
CONT.	CONTINUATION
CONT. RAIL	CONTACT RAIL
D.E.	DEAD END
DIA	DIAMETER
EXP. GAP	EXPANSION GAP
FTG	FITTING
GALV.	GALVANIZED
H.S.	HEEL OF SWITCH
HTL	HEATER TAPE LENGTH
HTR	HEATER
JB	JUNCTION BOX
JCT	JUNCTION
KCMIL	THOUSAND CIRCULAR MILS
LB.	POUND
LTG	LIGHTING
MAX	MAXIMUM
M.H.	MANHOLE
MIN	MINIMUM
MTD	MOUNTED
NOM	NOMINAL
NC	NORMALLY CLOSED
NO	NORMALLY OPEN
N.B.	NORTHBOUND
N.T.S.	NOT TO SCALE
P.B.	PULL BOX
PC.	POINT OF CURVE
P.HTL	POINT OF HEAT TAPE LENGTH
PI	POINT OF INTERSECTION
PLTF.	PLATFORM
PT. INC. (PI)	POINT OF INCLINE
PNL	PANEL
P.S.	POINT OF SWITCH
PT	POINT OF TANGENT
R.A.	RAIL ANCHOR
RAD	RADIUS
REPT.	REPEATER
R.O.W.	RIGHT OF WAY
RR.	RAILROAD
RTRC	REINFORCED THERMOSETTING RESIN (FIBERGLASS) CONDUIT
S.B.	SOUTHBOUND
SEC.	SECTION
SECT.	SECTIONALIZING
S.S.	STAINLESS STEEL
STA.	STATION
SW.	SWITCH
TRK.	TRACK
TYP	TYPICAL
X–ARM	CROSS ARM
1/C	SINGLE CONDUCTOR

SYMBOL LEGEND FOR CONTACT RAIL HEATERS

- HEATER TAPE CIRCUIT CONTROL CABINET
- N1 — NEGATIVE CONNECTION TO RUNNING RAIL
- P1 — POSITIVE CONNECTION TO CONTACT RAIL
- FUSE BOX

GENERAL NOTES

1. REMOVE ALL EXISTING TRACTION POWER CABLES AND/OR CONTACT RAILS NOT INDICATED TO REMAIN IN SERVICE.
2. ALL MAIN LINE RUNS AND "LAP" CONTACT RAILS SHALL UTILIZE 3.66 m (12'–0") INCLINES.
3. ALL "LEAD/KICK" OR "YARD" CONTACT RAILS SHALL UTILIZE 1.83 m (6'–0") INCLINES.
4. FOR TORQUE TIGHTENING VALUES SEE TESTING SECTION OF SPECIFICATIONS.
5. TRACK ROUTE IDENTIFICATION:

   PURPLE LINE: EVANSTON
   TRACK(S) ON WHICH TRAINS ARE TRAVELING FROM LINDEN TO THE LOOP SHALL BE DESIGNATED SOUTH BOUND.
   TRACK(S) ON WHICH TRAINS ARE TRAVELING FROM LOOP TO LINDEN SHALL BE DESIGNATED NORTH BOUND.

   RED LINE: HOWARD – DAN RYAN
   TRACK(S) ON WHICH TRAINS ARE TRAVELING FROM HOWARD TO 95TH SHALL BE DESIGNATED SOUTH BOUND.
   TRACK(S) ON WHICH TRAINS ARE TRAVELING FROM 95TH TO HOWARD SHALL BE DESIGNATED NORTH BOUND.

   GREEN LINE: HARLEM – ENGLEWOOD/JACKSON PARK
   TRACK(S) ON WHICH TRAINS ARE TRAVELING FROM HARLEM TO ASHLAND(ENGLEWOOD)/EAST 63RD(JACKSON PARK) SHALL BE DESIGNATED SOUTH BOUND.
   TRACK(S) ON WHICH TRAINS ARE TRAVELING FROM ASHLAND (ENGLEWOOD)/EAST 63RD(JACKSON PARK) TO HARLEM SHALL BE DESIGNATED NORTH BOUND.

   BLUE LINE: O'HARE – CONGRESS/DOUGLAS
   TRACK(S) ON WHICH TRAINS ARE TRAVELING FROM O'HARE TO DESPLAINES(CONGRESS)/CICERO–BERWYN(DOUGLAS) SHALL BE DESIGNATED SOUTH BOUND.
   TRACK(S) ON WHICH TRAINS ARE TRAVELING FROM DESPLAINES (CONGRESS)/CICERO–BERWYN(DOUGLAS) TO O'HARE SHALL BE DESIGNATED NORTH BOUND.

   BROWN LINE: RAVENSWOOD
   TRACK(S) ON WHICH TRAINS ARE TRAVELING FROM KIMBALL TO THE LOOP SHALL BE DESIGNATED SOUTH BOUND.
   TRACK(S) ON WHICH TRAINS ARE TRAVELING FROM LOOP TO KIMBALL SHALL BE DESIGNATED NORTH BOUND.

   YELLOW LINE: SKOKIE SWIFT
   TRACK(S) ON WHICH TRAINS ARE TRAVELING FROM DEMPSTER TO HOWARD SHALL BE DESIGNATED SOUTH BOUND.
   TRACK(S) ON WHICH TRAINS ARE TRAVELING FROM HOWARD TO DEMPSTER SHALL BE DESIGNATED NORTH BOUND.

   ORANGE LINE: MIDWAY
   TRACK(S) ON WHICH TRAINS ARE TRAVELING FROM THE LOOP TO THE MIDWAY YARD SHALL BE DESIGNATED SOUTH BOUND.
   TRACK(S) ON WHICH TRAINS ARE TRAVELING FROM MIDWAY YARD TO THE LOOP SHALL BE DESIGNATED NORTH BOUND.

   PINK LINE: DOUGLAS
   TRACK(S) ON WHICH TRAINS ARE TRAVELING FROM THE LOOP TO 54TH/CERMAK SHALL BE DESIGNATED SOUTH BOUND.
   TRACK(S) ON WHICH TRAINS ARE TRAVELING FROM 54/CERMAK TO THE LOOP SHALL BE DESIGNATED NORTH BOUND.
6. FOR SUBSTATION GROUNDING AND LIGHTING SYMBOLS AND NOTES SEE DRAWING STP–500.

ELEVATED AREA

1. PROVIDE SUFFICIENT CABLE SLACK AT ALL CONTACT RAIL TAPS TO ALLOW FOR 305 mm (1'–0") RAIL TRAVEL IN EACH DIRECTION.
2. STATIONING SHOWN IS ON CENTERLINE OF STRUCTURE.
3. MEASUREMENTS FROM BENTS ARE NOTED AS POSITIVE WHEN THE MEASUREMENT IS AWAY FROM THE LOOP AND NEGATIVE WHEN THE MEASUREMENT IS TOWARD THE LOOP.

CHICAGO TRANSIT AUTHORITY
ENGINEERING

SENSITIVE SECURITY INFORMATION

WARNING: THIS RECORD CONTAINS SENSITIVE SECURITY INFORMATION THAT IS CONTROLLED UNDER 49 CFR PARTS 15 AND 1520. NO PART OF THIS RECORD MAY BE DISCLOSED TO PERSONS WITHOUT A "NEED TO KNOW" AS DEFINED IN CFR PARTS 15 AND 1520, EXCEPT WITH THE WRITTEN PERMISSION OF THE ADMINISTRATOR OF THE TRANSPORTATION SECURITY ADMINISTRATION OR THE SECRETARY OF TRANSPORTATION. UNAUTHORIZED RELEASE MAY RESULT IN CIVIL PENALTY OR OTHER ACTION. FOR U.S. GOVERNMENT AGENCIES, PUBLIC DISCLOSURE IS GOVERNED BY 5 U.S.C. 552 AND 49 CFR PARTS 15 AND 1520.

DRAWING SCALE IS NOT GUARANTEED. CTA ASSUMES NO RISK OF LIABILITY FOR ERRORS CAUSED, DIRECTLY OR INDIRECTLY, BY SCALING OF THIS DRAWING.

STANDARD TRACTION POWER DRAWINGS

IN CHARGE	S. MATHEW
APPROVED BY	J. HARPER
CHECKED BY	M. PEREZ / R. JAMES
DESIGNED BY	CTA
DRAWN BY	CTA
PROJECT NO	
FILE NAME	

MARK	DATE	DESCRIPTION
01	01 AUG 2013	CAD FORMATTED
00	01 MAR 2013	NEW STANDARD

LOCATION IDENTIFIER:

SYMBOL, ABBREVIATIONS AND GENERAL NOTES

STP - 004

NO.	DATE	REVISIONS	DES.	DRW.	CHK.	DCCO	CDOT
4	7/3/2023	ISSUED FOR BID	BJ	EM	SM		

DESIGN BY: | DRAWN BY: | CHECKED BY: | APPROVED BY: | CDOT/APPROVED BY:

TRANSYSTEMS
222 SOUTH RIVERSIDE PLAZA SUITE 610
CHICAGO, ILLINOIS 60606

SKIDMORE, OWINGS & MERRILL LLP
224 SOUTH MICHIGAN AVENUE, SUITE 1000
CHICAGO, ILLINOIS 60604

FACET ENGINEERING
DBE/MBE CERTIFIED
Performance • Respect • Initiation • Dedication • Experience
FACET ENGINEERING
4316 NORTH ELSTON AVENUE
CHICAGO, ILLINOIS 60641

CHICAGO DEPARTMENT OF TRANSPORTATION
DIVISION OF ENGINEERING

STATE / LAKE LOOP ELEVATED STATION
200 NORTH STATE STREET, CHICAGO, IL 60601

TRACTION POWER SYMBOL LIST - STP-004

CDOT PROJECT D-1-209 | DATE: 9/9/2022

SPEC. NO.

DRAWING NO. ET-500

REVISION NO.

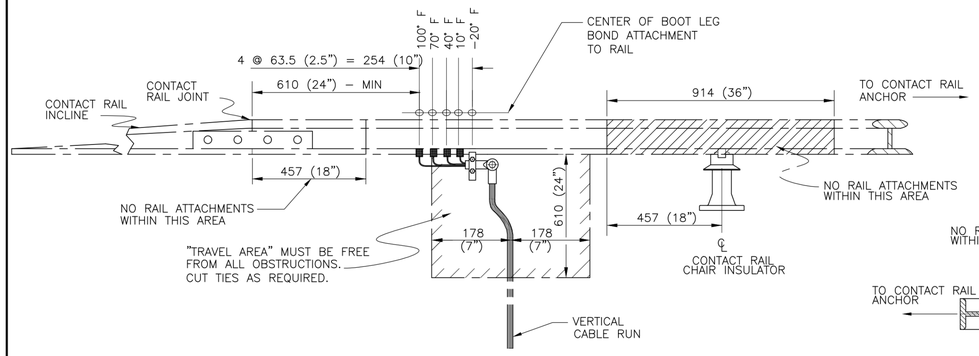

ELEVATION

1 / STP-117 DETAIL OF CONTACT RAIL INSTALLED ON ELEVATED TRACK

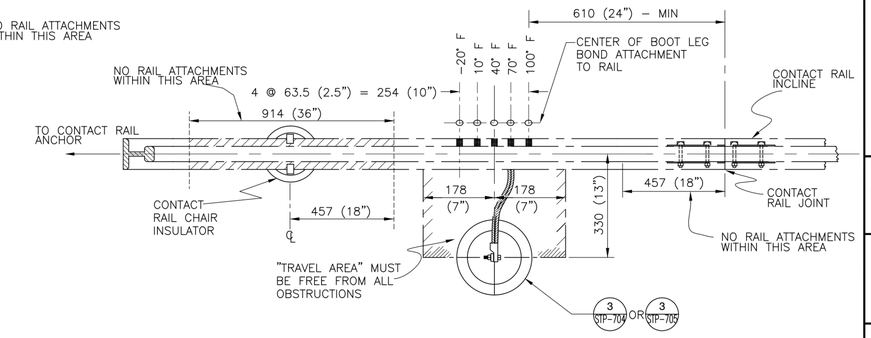

2 / STP-117 DETAIL OF CONTACT RAIL INSTALLED ON BALLASTED TRACK

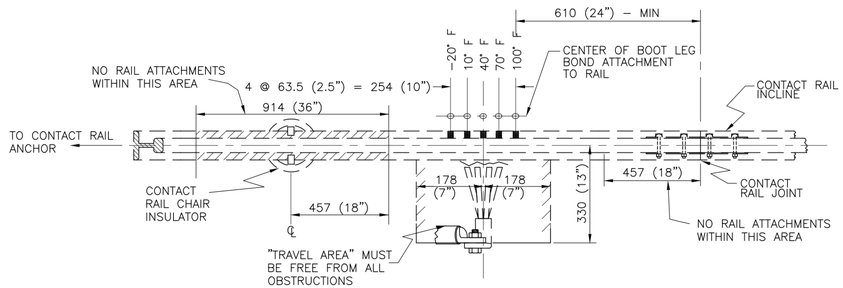

3 / STP-117 DETAIL OF CONTACT RAIL INSTALLED ON DIRECT RAIL FIXATION

NOTES:

1. THE DRAWING INDICATES:
   1.1 PROPER LOCATIONS AT WHICH CONTACT RAIL TAPS ARE TO BE WELDED TO CONTACT RAIL AT VARIOUS TEMPERATURES TO PREVENT DAMAGE TO TAPS DUE TO RAIL MOVEMENT.
   1.2 A BOND CONNNECTION FOR SURFACE OR STRUCTURE. "TRAVEL AREA", APPLIES TO STRUCTURE TRACK PARTICULARLY, WHERE TIES MUST BE MOVED OR CUT OFF TO PROVIDE THIS CLEARANCE.
2. CONNECTION POINTS INDICATED ARE FOR CONTACT RAIL TAPS LOCATED 243.8 m (800 ft.) OR MORE FROM CONTACT RAIL ANCHOR.
3. FOR CONTACT RAIL TAPS LOCATED FROM 121.9 m (400 ft.) TO 243.8 m (800 ft.) FROM CONTACT RAIL ANCHOR, REDUCE DISTANCES FROM CENTERLINE BY ONE–HALF.
4. FOR CONTACT RAIL TAPS LOCATED LESS THAN 121.9 m (400 ft.) FROM CONTACT RAIL ANCHOR, LOCATE CONNECTION AT CENTER LINE OF TAP AT ALL TEMPERATURES.
5. ALL DIMENSIONS ARE IN MILLIMETERS UNLEESS OTHERWISE NOTED.

CHICAGO TRANSIT AUTHORITY
ENGINEERING

SENSITIVE SECURITY INFORMATION

WARNING: THIS RECORD CONTAINS SENSITIVE SECURITY INFORMATION THAT IS CONTROLLED UNDER 49 CFR PARTS 15 AND 1520. NO PART OF THIS RECORD MAY BE DISCLOSED TO PERSONS WITHOUT A "NEED TO KNOW" AS DEFINED IN CFR PARTS 15 AND 1520, EXCEPT WITH THE WRITTEN PERMISSION OF THE ADMINISTRATOR OF THE TRANSPORTATION SECURITY ADMINISTRATION, OR THE SECRETARY OF TRANSPORTATION. UNAUTHORIZED RELEASE MAY RESULT IN CIVIL PENALTY OR OTHER ACTION. FOR U.S. GOVERNMENT AGENCIES, PUBLIC DISCLOSURE IS GOVERNED BY 5 U.S.C. 552 AND 49 CFR PARTS 15 AND 1520.

DRAWING SCALE IS NOT GUARANTEED. CTA ASSUMES NO RISK OF LIABILITY FOR ERRORS CAUSED, DIRECTLY OR INDIRECTLY, BY SCALING OF THIS DRAWING.

STANDARD TRACTION POWER DRAWINGS

IN CHARGE	S. MATHEW
APPROVED BY	J. HARPER
CHECKED BY	M. PEREZ / R. JAMES
DESIGNED BY	CTA
DRAWN BY	CTA
PROJECT NO	
FILE NAME	

MARK	DATE	DESCRIPTION
01	01 AUG 2013	CAD FORMATTED
00	01 MAR 2013	NEW STANDARD

LOCATION IDENTIFIER:

CONTACT RAIL TAPS ASSEMBLY AND DETAILS SHEET 1 OF 2

STP - 117

DESIGN BY:										
DRAWN BY:										
CHECKED BY:										
APPROVED BY:		4	7/3/2023	ISSUED FOR BID	BJ	EM	SM			
CDOT/APPROVED BY:		NO.	DATE	REVISIONS	DES.	DRW.	CHK.	DCCO	CDOT	

TRANSYSTEMS
222 SOUTH RIVERSIDE PLAZA SUITE 610
CHICAGO, ILLINOIS 60606

SKIDMORE, OWINGS & MERRILL LLP
224 SOUTH MICHIGAN AVENUE, SUITE 1000
CHICAGO, ILLINOIS 60604

FACET ENGINEERING
DBE/MBE CERTIFIED
Performance • Respect • Initiation • Dedication • Experience
FACET ENGINEERING
4316 NORTH ELSTON AVENUE
CHICAGO, ILLINOIS 60641

CHICAGO DEPARTMENT OF TRANSPORTATION
DIVISION OF ENGINEERING

STATE / LAKE LOOP ELEVATED STATION
200 NORTH STATE STREET, CHICAGO, IL 60601

TRACTION POWER - STP-117 CONTACT RAIL TAPS ASSY AND DETAILS

CDOT PROJECT D-1-209 | DATE: 9/9/2022

SPEC. NO.

DRAWING NO. ET-501

REVISION NO.

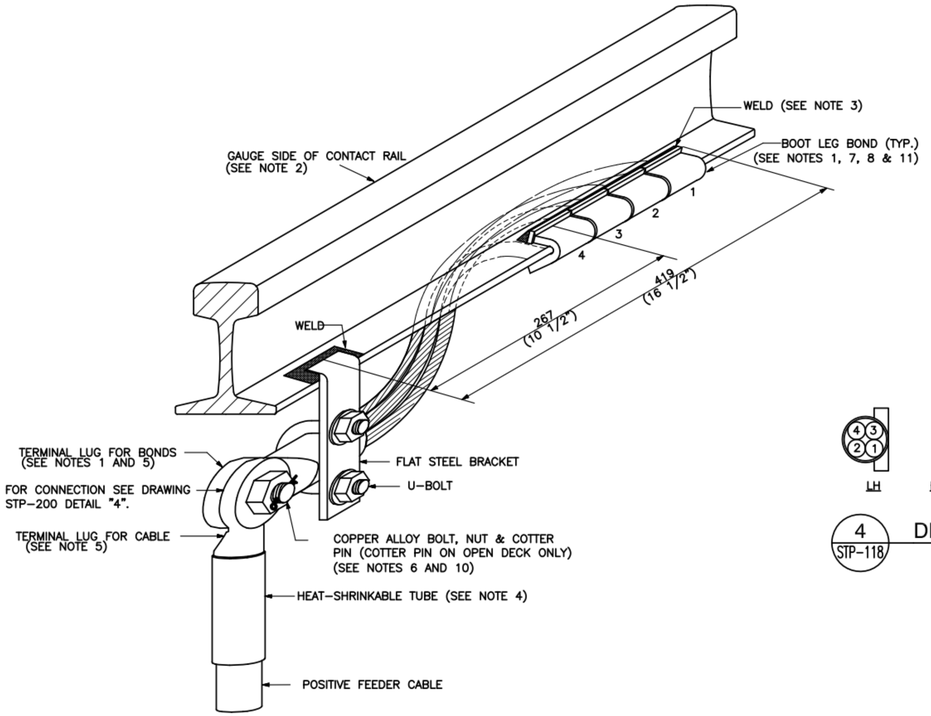

1 STP-118 DETAIL OF CONTACT RAIL TAP ASSEMBLY ON OPEN DECK STRUCTURES

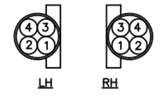

4 STP-118 DETAIL

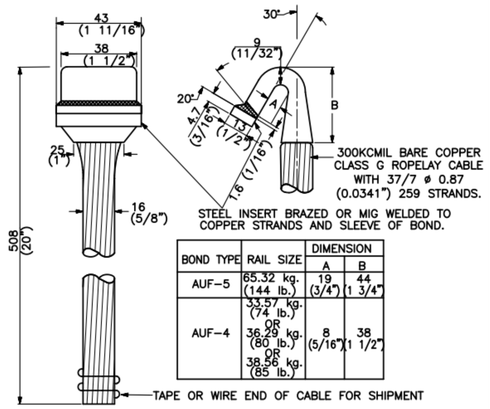

BOND TYPE	RAIL SIZE	DIMENSION A	DIMENSION B
AUF-5	85.32 kg. (144 lb.)	19 (3/4")	44 (1 3/4")
AUF-4	33.57 kg. (74 lb.) OR 36.29 kg. (80 lb.) OR 38.56 kg. (85 lb.)	8 (5/16")	38 (1 1/2")

2 STP-118 DETAIL OF BOOT LEG BOND

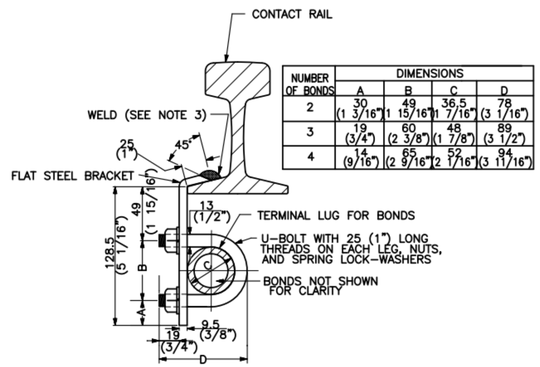

NUMBER OF BONDS	DIMENSIONS A	B	C	D
2	30 (1 3/16")	49 (1 15/16")	36.5 (1 7/16")	78 (3 1/16")
3	19 (3/4")	60 (2 3/8")	48 (1 7/8")	89 (3 1/2")
4	14 (9/16")	65 (2 9/16")	52 (2 1/16")	94 (3 11/16")

A STP-118 SECTION

NOTES:

1. THE NUMBER OF BOOT LEG BONDS REQUIRED IS DEPENDENT ON THE SIZE OF THE POSITIVE D.C. FEEDER:
   A. USE TWO (2) BONDS FOR 500KCMIL FEEDER.
   B. USE THREE (3) BONDS FOR 1000KCMIL FEEDER.
   C. USE FOUR (4) BONDS FOR 1500KCMIL & 2000KCMIL FEEDERS.
   LENGTHS OF BOOT LEG BONDS ARE AS FOLLOWS:
   1ST BOND – 508 (20") (FULL LENGTH).
   2ND BOND – 470 (18 1/2").
   3RD BOND – 432 (17").
   4TH BOND – 394 (15 1/2").
   INSTALLATION OF EQUAL QUANTITY OF RIGHT AND LEFT HAND BOND ASSEMBLIES IS REQUIRED, SEE DETAIL "4".
2. RAIL TAP ASSEMBLY TYPICAL FOR BASE & ALUMINUM CLAD RAIL. ELEVATED, OPEN DECK TRACK, INSTALL AS SHOWN.
3. APPLY 9.5 (3/8") WIDE WELD USING STEEL ARC WELDING ROD, WT. 0.3#, BOND WT. 1.85#.
4. FOR HEAT-SHRINKABLE TUBE SEE DRAWING STP-201, DETAIL 6.
5. FOR TERMINAL LUG SEE DRAWING STP-200, DETAIL 1.
6. FOR COPPER ALLOY BOLT, COTTER PIN AND NUT DETAILS SEE DRAWING STP-201, DETAIL 4.
7. BUTT BONDS UP AGAINST EACH OTHER BEFORE WELDING.
8. FOR CONTACT RAIL TAP CONNECTIONS DEPENDING ON TEMPERATURE SEE DRAWING STP-117, DETAIL 1.
9. ALL DIMENSIONS ARE IN MILLIMETERS UNLESS OTHERWISE NOTED.
10. TERMINAL LUG BOLTS ON ELEVATED OPEN DECK STRUCTURES MUST HAVE COTTER PINS.
11. ELEVATED OPEN DECK TRACK INSTALLATION SHOWN. BALLASTED TRACK BONDS SHALL BE WELDED TO GAUGE SIDE OF CONTACT RAIL.

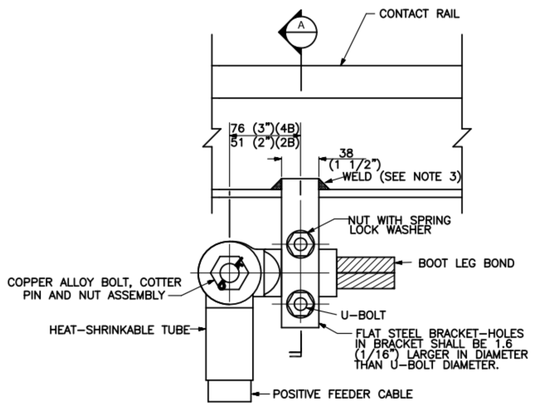

3 STP-118 DETAIL OF SIDE VIEW

CHICAGO TRANSIT AUTHORITY
ENGINEERING

SENSITIVE SECURITY INFORMATION

WARNING: THIS RECORD CONTAINS SENSITIVE SECURITY INFORMATION THAT IS CONTROLLED UNDER 49 CFR PARTS 15 AND 1520. NO PART OF THIS RECORD MAY BE DISCLOSED TO PERSONS WITHOUT A "NEED TO KNOW" AS DEFINED IN CFR PARTS 15 AND 1520, EXCEPT WITH THE WRITTEN PERMISSION OF THE ADMINISTRATION OF THE TRANSPORTATION SECURITY ADMINISTRATION OR THE SECRETARY OF TRANSPORTATION. UNAUTHORIZED RELEASE MAY RESULT IN CIVIL PENALTY OR OTHER ACTION. FOR U.S. GOVERNMENT AGENCIES, PUBLIC DISCLOSURE IS GOVERNED BY 5 U.S.C. 552 AND 49 CFR PARTS 15 AND 1520.

DRAWING SCALE IS NOT GUARANTEED.
CTA ASSUMES NO RISK OF LIABILITY FOR ERRORS CAUSED, DIRECTLY OR INDIRECTLY, BY SCALING OF THIS DRAWING.

STANDARD TRACTION POWER DRAWINGS

IN CHARGE	L. RICHMOND
APPROVED BY	J. HARPER
CHECKED BY	M. PEREZ/D. TINSLEY
DESIGNED BY	CTA
DRAWN BY	CTA
PROJECT NO	
FILE NAME	

MARK	DATE	DESCRIPTION
	12-DEC-18	ISSUED FOR EXECUTION
04	20-APR-18	FINAL RFP
03	06 OCT 2017	DRAWING UPDATED
02	01 AUG 2015	CORRECTED BOLT MATERIAL
01	01 AUG 2013	CAD FORMATTED
00	20 OCT 2016	NEW STANDARD

LOCATION IDENTIFIER:

CONTACT RAIL TAPS ASSEMBLY AND DETAILS SHEET 2 OF 2

STP - 118

DESIGN BY:									
DRAWN BY:									
CHECKED BY:									
APPROVED BY:		4	7/3/2023	ISSUED FOR BID	BJ	EM	SM		
CDOT/APPROVED BY:		NO.	DATE	REVISIONS	DES.	DRW.	CHK.	DCCO	CDOT

TRANSYSTEMS
222 SOUTH RIVERSIDE PLAZA SUITE 610
CHICAGO, ILLINOIS 60606

SKIDMORE, OWINGS & MERRILL LLP
224 SOUTH MICHIGAN AVENUE, SUITE 1000
CHICAGO, ILLINOIS 60604

FACET ENGINEERING
DBE/MBE CERTIFIED
Performance • Respect • Initiation • Dedication • Experience
FACET ENGINEERING
4316 NORTH ELSTON AVENUE
CHICAGO, ILLINOIS 60641

CHICAGO DEPARTMENT OF TRANSPORTATION
DIVISION OF ENGINEERING

STATE / LAKE LOOP ELEVATED STATION
200 NORTH STATE STREET, CHICAGO, IL 60601

TRACTION POWER - STP-118 CONTACT RAIL TAPS ASSY AND DETAILS

CDOT PROJECT D-1-209 | DATE: 9/9/2022

SPEC. NO.

DRAWING NO. ET-502

REVISION NO.

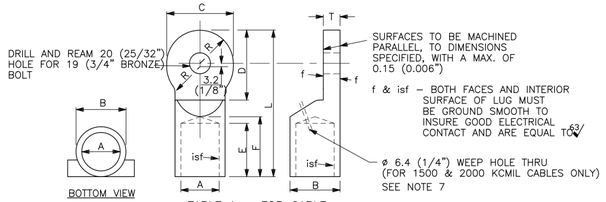

TABLE A – FOR CABLE

CONDUCTOR SIZE (KCMIL)	TERMINAL LUG DIMENSIONS IN MILLIMETERS AND (INCHES)								
	A	B	C	D	E	F	L	R	T
500	24 (15/16)	32 (1 1/4)	51 (2)	54 (2 1/8)	35 (1 3/8)	38 (1 1/2)	95 (3 3/4)	25 (1)	13 (1/2)
1000	30 (1 3/16)	36.5 (1 7/16)	51 (2)	54 (2 1/8)	35 (1 3/8)	38 (1 1/2)	95 (3 3/4)	25 (1)	13 (1/2)
1111	30 (1 3/16)	36.5 (1 7/16)	51 (2)	54 (2 1/8)	35 (1 3/8)	38 (1 1/2)	95 (3 3/4)	25 (1)	13 (1/2)
1500	36.5 (1 7/16)	48 (1 7/8)	63.5 (2 1/2)	67 (2 5/8)	51 (2)	57 (2 1/4)	140 (5 1/2)	32 (1 1/4)	16 (5/8)
2000	36.5 (1 7/16)	48 (1 7/8)	63.5 (2 1/2)	67 (2 5/8)	51 (2)	57 (2 1/4)	140 (5 1/2)	32 (1 1/4)	16 (5/8)

TABLE B – FOR BONDS

NUMBER OF 300KCMIL BONDS	TERMINAL LUG DIMENSIONS IN MILLIMETERS AND (INCHES)								
	A	B	C	D	E	F	L	R	T
2	30 (1 3/16)	36.5 (1 7/16)	51 (2)	54 (2 1/8)	35 (1 3/8)	38 (1 1/2)	95 (3 3/4)	25 (1)	13 (1/2)
3	36.5 (1 7/16)	48 (1 7/8)	63.5 (2 1/2)	67 (2 5/8)	51 (2)	57 (2 1/4)	140 (5 1/2)	32 (1 1/4)	16 (5/8)
4	41 (1 5/8)	52 (2 1/16)	63.5 (2 1/2)	67 (2 5/8)	51 (2)	57 (2 1/4)	140 (5 1/2)	32 (1 1/4)	16 (5/8)

1 STP-200 DETAIL OF STRIGHT TERMINAL LUG

FOR MATERIAL SEE NOTE 3

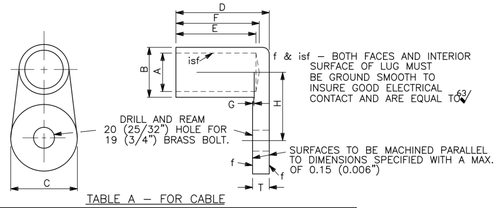

TABLE A – FOR CABLE

CONDUCTOR SIZE (KCMIL)	TERMINAL LUG DIMENSIONS IN MILLIMETERS AND (INCHES)									
	A	B	C	D	E	F	G	H	T	
500	24 (15/16)	32 (1 1/4)	51 (2)	63.5 (2 1/2)	51 (2)	57 (2 1/4)	1.6 (1/16)	65 (2 9/16)	13 (1/2)	
1000	30 (1 3/16)	36.5 (1 7/16)	51 (2)	63.5 (2 1/2)	51 (2)	57 (2 1/4)	1.6 (1/16)	65 (2 9/16)	13 (1/2)	
1111	30 (1 3/16)	36.5 (1 7/16)	51 (2)	63.5 (2 1/2)	51 (2)	57 (2 1/4)	1.6 (1/16)	65 (2 9/16)	13 (1/2)	
1500	36.5 (1 7/16)	48 (1 7/8)	63.5 (2 1/2)	89 (3 1/2)	76 (3)	79 (3 1/8)	1.6 (1/16)	65 (2 9/16)	16 (5/8)	
2000	36.5 (1 7/16)	48 (1 7/8)	63.5 (2 1/2)	89 (3 1/2)	76 (3)	79 (3 1/8)	1.6 (1/16)	65 (2 9/16)	16 (5/8)	

TABLE B – FOR BONDS

NUMBER OF 300KCMIL BONDS	TERMINAL LUG DIMENSIONS IN MILLIMETERS AND (INCHES)								
	A	B	C	D	E	F	G	H	T
2	30 (1 3/16)	36.5 (1 7/16)	51 (2)	63.5 (2 1/2)	51 (2)	57 (2 1/4)	1.6 (1/16)	65 (2 9/16)	13 (1/2)
3	36.5 (1 7/16)	48 (1 7/8)	63.5 (2 1/2)	89 (3 1/2)	76 (3)	79 (3 1/8)	1.6 (1/16)	65 (2 9/16)	16 (5/8)
4	41 (1 5/8)	52 (2 1/16)	63.5 (2 1/2)	89 (3 1/2)	76 (3)	79 (3 1/8)	1.6 (1/16)	65 (2 9/16)	16 (5/8)

2 STP-200 DETAIL OF 90° TERMINAL LUG

FOR MATERIAL SEE NOTE 3

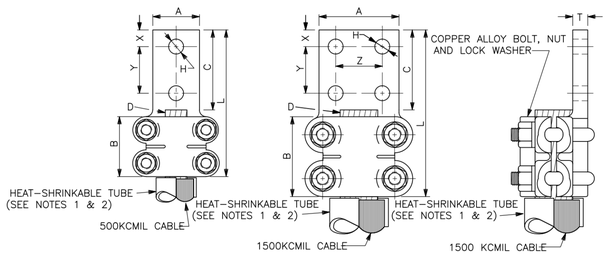

CABLE SIZE (KCMIL)	DOSSERT CATALOG NUMBER	DIMENSIONS IN MILLIMETERS AND (INCHES)										
		A	B	C	D	H	L	T	X	Y	Z	BOLT SIZE
500	TC 50–2N	38 (1 1/2)	76 (3)	76 (3)	21 (.814)	14 (9/16)	159 (6 1/4)	9.5 (3/8)	16 (5/8)	44.5 (1 3/4)	– –	9.5 (3/8)
1500	TC 150–4N	76 (3)	102 (4)	76 (3)	36 (1.412)	14 (9/16)	187 (7 3/8)	14 (9/16)	16 (5/8)	44.5 (1 3/4)	44.5 (1 3/4)	13 (1/2)

3 STP-200 DETAIL OF BOLTED TERMINAL CONNECTOR

FOR MATERIAL SEE NOTE 3

NOTES:

1. ALL ENDS OF CABLE SHALL BE COVERED WITH HEAT–SHRINKABLE TUBE (RAYCHEM OR MAC PRODUCTS OR APPROVED EQUAL WITH HOT MELT MASTIC). TUBE SHALL BE INSTALLED IN ACCORDANCE WITH MANUFACTURER'S RECOMMENDATIONS.

2. PRIOR TO APPLYING HEAT SHRINKABLE TUBE: a) BUILD–UP SPLICE JOINT WITH CONTINUOUS WRAPS OF RUBBER TAPE TO CREATE A SMOOTH UNDERLYING SURFACE; b) WRAP WITH HALF–LAPPED FRICTION TAPE OVER ENTIRE SPLICE AREA & AROUND CABLE AND LUG BASE.

3. BOLTED TERMINAL LUGS, SOLDERED LUGS AND TEE CONNECTORS MADE PER COPPER DEVELOPMENT ASSOCIATION (CDA) SPECIFICATION (UNS. NO. C83300).

4. BOLT AND NUT TO BE MADE FROM ONE OF THESE COPPER ALLOYS
a) SILICONE BRONZE, COPPER ALLOY C65500 TEMPER DESIGNATION H00 (1/8 HARD), PER ASTM B 98 OR B 99, MINIMUM HARDNESS TO BE 75 HRB.

b) COPPER ALLOY UNS C36000 WITH A TEMPER DESIGNATION OF H02 (HARD) PER ASTM B16 WITH A MINIMUM HARDNESS RATING OF 78 HRB.

5. ALL TEE CONNECTOR ASSEMBLIES SHALL BE COVERED WITH A SINGLE HALF–LAPPED LAYER OF SCOTCH 2210 VINYL MASTIC TAPE.

6. CABLE NOT SHOWN FOR CLARITY PURPOSES ONLY.

7. WEEP HOLE REQUIRED ONLY FOR LUGS PURCHASED BY CONTRACTOR.

8. EXCEPT WHERE NOTED, ALL BOLTS SHALL MEET ANSI B 18.2.1. TOLERANCES FOR THE BOLT HEAD & NUT HEIGHT, DISTANCE ACROSS THE FLATS AND THE DISTANCE ACROSS THE CORNERS SHALL BE ± 0.8 (1/32")

9. ALL DIMENSIONS ARE IN MILLIMETERS UNLESS OTHERWISE NOTED.

CHICAGO TRANSIT AUTHORITY
ENGINEERING

SENSITIVE SECURITY INFORMATION

WARNING: THIS RECORD CONTAINS SENSITIVE SECURITY INFORMATION THAT IS CONTROLLED UNDER 49 CFR PARTS 15 AND 1520. NO PART OF THIS RECORD MAY BE DISCLOSED TO PERSONS WITHOUT A "NEED TO KNOW" AS DEFINED IN CFR PARTS 15 AND 1520, EXCEPT WITH THE WRITTEN PERMISSION OF THE ADMINISTRATOR OF THE TRANSPORTATION SECURITY ADMINISTRATION OR THE SECRETARY OF TRANSPORTATION. UNAUTHORIZED RELEASE MAY RESULT IN CIVIL PENALTY OR OTHER ACTION. FOR U.S. GOVERNMENT AGENCIES, PUBLIC DISCLOSURE IS GOVERNED BY 5 U.S.C. 552 AND 49 CFR PARTS 15 AND 1520.

DRAWING SCALE IS NOT GUARANTEED.
CTA ASSUMES NO RISK OF LIABILITY FOR ERRORS CAUSED, DIRECTLY OR INDIRECTLY, BY SCALING OF THIS DRAWING.

STANDARD TRACTION POWER
DRAWINGS

IN CHARGE	S. MATHEW
APPROVED BY	J. HARPER
CHECKED BY	M. PEREZ / R. JAMES
DESIGNED BY	CTA
DRAWN BY	CTA
PROJECT NO	
FILE NAME	

02	01 AUG 2015	REVISED NOTE 4
01	01 AUG 2013	CAD FORMATTED
00	01 MAR 2013	NEW STANDARD
MARK	DATE	DESCRIPTION

LOCATION IDENTIFIER:

CABLE DETAILS (1 of 2)

STP - 200

DESIGN BY:										
DRAWN BY:										
CHECKED BY:										
APPROVED BY:		4	7/3/2023	ISSUED FOR BID	BJ	EM	SM			
CDOT/APPROVED BY:		NO.	DATE	REVISIONS	DES.	DRW.	CHK.	DCCO	CDOT	

TRANSYSTEMS
222 SOUTH RIVERSIDE PLAZA SUITE 610
CHICAGO, ILLINOIS 60606

SKIDMORE, OWINGS & MERRILL LLP
224 SOUTH MICHIGAN AVENUE, SUITE 1000
CHICAGO, ILLINOIS 60604

FACET ENGINEERING
4316 NORTH ELSTON AVENUE
CHICAGO, ILLINOIS 60641

CHICAGO DEPARTMENT OF TRANSPORTATION
DIVISION OF ENGINEERING

STATE / LAKE LOOP ELEVATED STATION
200 NORTH STATE STREET, CHICAGO, IL 60601

TRACTION POWER - STP-200 CABLE DETAILS

CDOT PROJECT D-1-209 | DATE: 9/9/2022

SPEC. NO.

DRAWING NO. ET-503

REVISION NO.

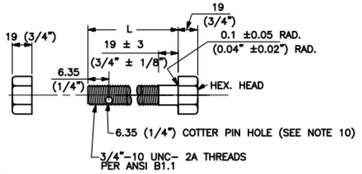

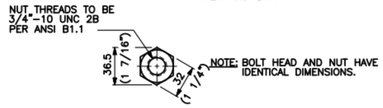

CTA ITEM NO.	LENGTH L
1045368	2–1/2"
1045371	3"
1045377	4–1/2"

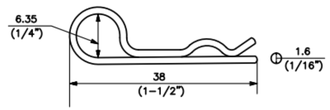

FOR COTTER PIN SHAPE AND WIRE DIAMETER SEE NOTE 11.
FOR MATERIAL SEE NOTE 4.

4 STP-201 DETAIL OF COPPER ALLOY BOLT, NUT & COTTER PIN (NTS)

FOR TOLERANCES SEE NOTE 8.
FOR MATERIAL SEE NOTE 4.

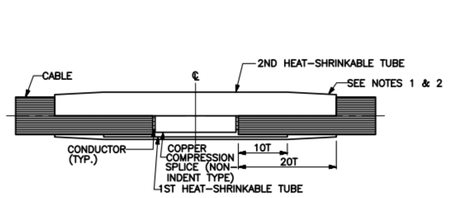

T – THICKNESS OF CABLE INSULATION PLUS JACKET

NOTE: MINIMUM TOTAL THICKNESS OF BOTH HEAT–SHRINKABLE TUBES SHALL BE 1.0 TIMES THE THICKNESS OF THE CABLE INSULATION PLUS JACKET.

SEE TABLE BELOW FOR CORRECT PART NUMBERS.

CABLE SIZE	1ST TUBE	2ND TUBE
500KCMIL	WCSM – 70/20	WCSM – 70/20
1000KCMIL	WCSM – 110/30	WCSM – 110/30
1111KCMIL	WCSM – 110/30	WCSM – 110/30
1500KCMIL	WCSM – 130/35	WCSM – 130/35
2000KCMIL	WCSM – 130/35	WCSM – 130/35

5 STP-201 DETAIL OF CABLE SPLICE

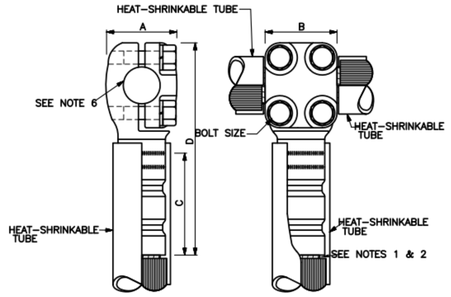

CABLE SIZE (KCMIL)		DOSSERT CATALOG NUMBER	DIMENSIONS IN MILLIMETERS AND (INCHES)				
RUN	TAP		A	B	C	D	BOLT SIZE
500	500	BCKT 50 – 50	44.5 (1 3/4)	51 (2)	57 (2 1/4)	135 (5 5/16)	9.5 (3/8)
1000	500	BCKT 100 – 50	56 (2 3/16)	51 (2)	57 (2 1/4)	146 (5 3/4)	13 (1/2)
1000	1000	BCKT 100 – 100	63.5 (2 1/2)	67 (2 5/8)	76 (3)	178 (7)	13 (1/2)
1500	500	BCKT 150 – 50	63.5 (2 1/2)	51 (2)	57 (2 1/4)	157 (6 3/16	13 (1/2)
1500	1000	BCKT 150 – 100	68 (2 11/16)	70 (2 3/4)	76 (3)	184 (7 1/4)	13 (1/2)
1500	1500	BCKT 150 – 150	68 (2 11/16)	70 (2 3/4)	86 (3 3/8)	206 (8 1/8)	13 (1/2)

7 STP-201 DETAIL OF TEE CONNECTOR

FOR MATERIAL SEE NOTE 3

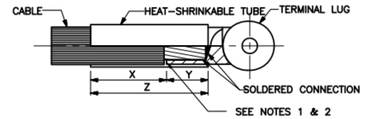

NOTE: SEE TABLE BELOW FOR DIMENSIONS AND CORRECT PART NUMBERS

DIMENSIONS IN MILLIMETERS AND (INCHES)				
CABLE SIZE	TUBE	X	Y	Z
500KCMIL	WCSM–70/20	86 (3 5/8)	35 (1 3/8)	127.5 (5)
1000KCMIL	WCSM–110/30	98 (3 7/8)	54 (2 1/8)	152 (6)
1111KCMIL	WCSM–110/30	98 (3 7/8)	54 (2 1/8)	152 (6)
1500KCMIL	WCSM–130/35	98 (3 7/8)	54 (2 1/8)	152 (6)
2000KCMIL	WCSM–130/35	98 (3 7/8)	54 (2 1/8)	152 (6)

X = CABLE JACKETING
Y = EXPOSED CABLE
Z = HEAT SHRINKABLE TUBING

6 STP-201 DETAIL OF TERMINAL LUG INSTALLATION

NOTES:

1. ALL ENDS OF CABLE SHALL BE COVERED WITH HEAT–SHRINKABLE TUBE (RAYCHEM OR MAC PRODUCTS OR APPROVED EQUAL WITH HOT MELT MASTIC). TUBE SHALL BE INSTALLED IN ACCORDANCE WITH MANUFACTURER'S RECOMMENDATIONS.

2. PRIOR TO APPLYING HEAT SHRINKABLE TUBE: a) BUILD–UP SPLICE JOINT WITH CONTINUOUS WRAPS OF RUBBER TAPE TO CREATE A SMOOTH UNDERLYING SURFACE; b) WRAP WITH HALF–LAPPED FRICTION TAPE OVER ENTIRE SPLICE AREA & AROUND CABLE AND LUG BASE.

3. BOLTED TERMINAL LUGS, SOLDERED LUGS AND TEE CONNECTORS MADE PER COPPER DEVELOPMENT ASSOCIATION (CDA) SPECIFICATION (UNS. NO. C83300).

4. BOLT, NUT AND COTTER PIN TO BE MADE FROM ONE OF THE FOLLOWING COPPER ALLOYS:

   a) SILICONE BRONZE, COPPER ALLOY C65500 TEMPER DESIGNATION H00 (1/8 HARD), PER ASTM B 98 OR B 99, MINIMUM HARDNESS TO BE 75 HRB.

   b) COPPER ALLOY UNS C36000 WITH A TEMPER DESIGNATION OF H02 (HARD) PER ASTM B16 WITH A MINIMUM HARDNESS RATING OF 78 HRB.

5. ALL TEE CONNECTOR ASSEMBLIES IN ELEVATED AREAS SHALL BE COVERED IN SINGLE HALF–LAPPED LAYER WITH SCOTCH 2210 VINYL MASTIC TAPE. FOR UNDER GROUND INSTALLATIONS, SEE STP–211

6. CABLE NOT SHOWN FOR CLARITY PURPOSES ONLY.

7. WEEP HOLE REQUIRED ONLY FOR LUGS PURCHASED BY CONTRACTOR.

8. EXCEPT WHERE NOTED, ALL BOLTS SHALL MEET ANSI B 18.2.1. TOLERANCES FOR THE BOLT HEAD & NUT HEIGHT, DISTANCE ACROSS THE FLATS AND THE DISTANCE ACROSS THE CORNERS SHALL BE ± 0.8 (1/32")

9. ALL DIMENSIONS ARE IN MILLIMETERS UNLESS OTHERWISE NOTED.

10. COTTER PIN HOLE SHALL BE LOCATED 6 (1/4") FROM THE END OF COPPER ALLOY BOLT AND SHALL BE 6 (1/4") INNER DIAMETER.

11. ALL COTTER PINS SHALL BE HUMPED WITH TAPERED PRONGS AND HAVE A WIRE DIAMETER OF 1.6 (1/16").

CHICAGO TRANSIT AUTHORITY
ENGINEERING

SENSITIVE SECURITY INFORMATION

WARNING: THIS RECORD CONTAINS SENSITIVE SECURITY INFORMATION THAT IS CONTROLLED UNDER 49 CFR PARTS 15 AND 1520. NO PART OF THIS RECORD MAY BE DISCLOSED TO PERSONS WITHOUT A "NEED TO KNOW" AS DEFINED IN CFR PARTS 15 AND 1520, EXCEPT WITH THE WRITTEN PERMISSION OF THE ADMINISTRATOR OF THE TRANSPORTATION SECURITY ADMINISTRATION OR THE SECRETARY OF TRANSPORTATION. UNAUTHORIZED RELEASE MAY RESULT IN CIVIL PENALTY OR OTHER ACTION. FOR U.S. GOVERNMENT AGENCIES, PUBLIC DISCLOSURE IS GOVERNED BY 5 U.S.C. 552 AND 49 CFR PARTS 15 AND 1520.

DRAWING SCALE IS NOT GUARANTEED.
CTA ASSUMES NO RISK OF LIABILITY FOR ERRORS CAUSED, DIRECTLY OR INDIRECTLY, BY SCALING OF THIS DRAWING.

STANDARD TRACTION POWER DRAWINGS

IN CHARGE	**L. RICHMOND**
APPROVED BY	**J. HARPER**
CHECKED BY	**M. PEREZ/D. TINSLEY**
DESIGNED BY	**CTA**
DRAWN BY	**CTA**
PROJECT NO	
FILE NAME	

MARK	DATE	DESCRIPTION
	12–DEC–18	ISSUED FOR EXECUTION
05	20–APR–18	FINAL RFP
04	06 OCT 2017	DRAWING UPDATE
03	01 AUG 2015	REVISED NOTE 4
02	07 MAR 2014	REV. NOTE 5 AND TABLES
01		
00	20 OCT 2016	NEW STANDARD

LOCATION IDENTIFIER:

CABLE DETAILS (2 of 2)

STP - 201

NO.	DATE	REVISIONS	DES.	DRW.	CHK.	DCCO	CDOT
4	7/3/2023	ISSUED FOR BID	BJ	EM	SM		

DESIGN BY:
DRAWN BY:
CHECKED BY:
APPROVED BY:
CDOT/APPROVED BY:

TRANSYSTEMS
222 SOUTH RIVERSIDE PLAZA SUITE 610
CHICAGO, ILLINOIS 60606

SKIDMORE, OWINGS & MERRILL LLP
224 SOUTH MICHIGAN AVENUE, SUITE 1000
CHICAGO, ILLINOIS 60604

FACET ENGINEERING
DBE/MBE CERTIFIED
Performance • Respect • Initiation • Dedication • Experience
FACET ENGINEERING
4316 NORTH ELSTON AVENUE
CHICAGO, ILLINOIS 60641

CHICAGO DEPARTMENT OF TRANSPORTATION
DIVISION OF ENGINEERING

STATE / LAKE LOOP ELEVATED STATION
200 NORTH STATE STREET, CHICAGO, IL 60601

TRACTION POWER - STP-201 CABLE DETAILS

CDOT PROJECT D-1-209

DATE: 9/9/2022

SPEC. NO.

DRAWING NO. ET-504

REVISION NO.

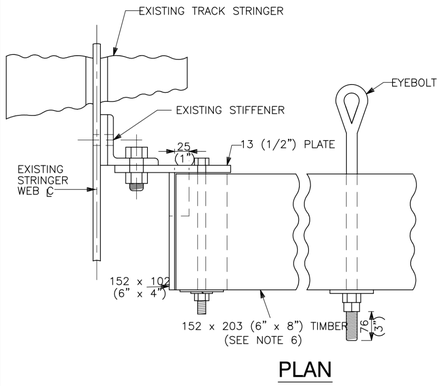

PLAN

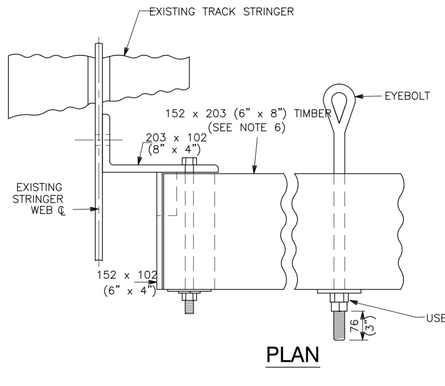

PLAN

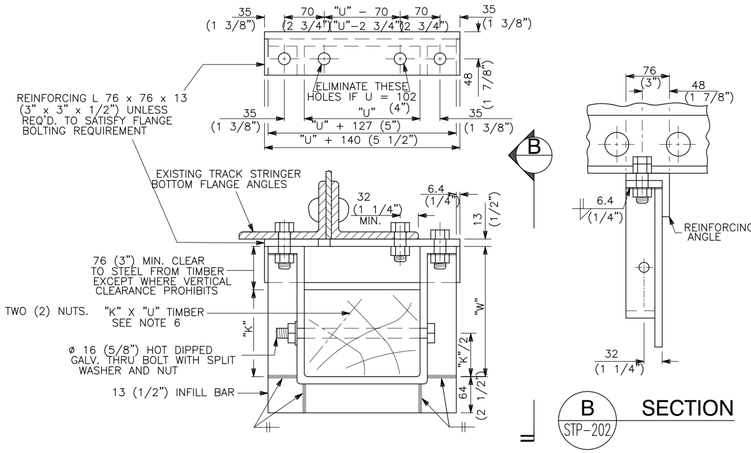

B SECTION STP-202

3 STP-202 DETAIL OF ANGLE TYPE U-CLAMP CABLE DEAD-END

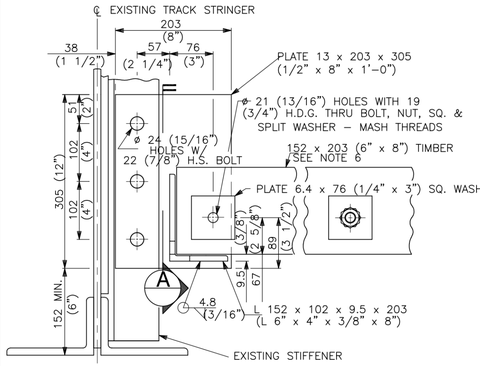

ELEVATION

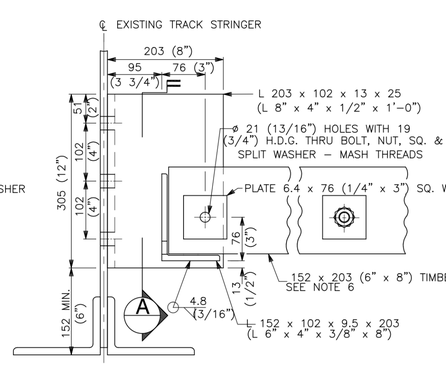

2 STP-202 DETAIL OF CONNECTION AT WEB PLATE

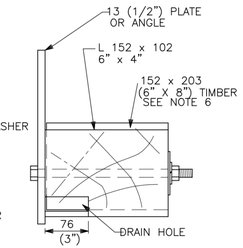

A SECTION STP-202

1 STP-202 DETAIL OF CONNECTION AT STIFFENER

TYPICAL DEAD END BRACKET ON TRACK STRINGER WEB

(SHOWN MOUNTED PERPENDICULAR TO TRACK STRINGER)

TABLE OF VARIABLE DIMENSIONS "K" & "U" ARE TIMBER SIZES			
U−CLAMP	"K"	"U"	"W"
TYPE "A"	102 (4")	102 (4")	178 (7")
TYPE "B"	152 (6")	152 (6")	229 (9")
TYPE "C"	152 (6")	203 (8")	229 (9")

NOTES:

1. U−CLAMP TO BE USED WHERE CABLE IS BELOW BOTTOM OF TRACK STRINGER.
2. ALL STEEL: ASTM A36.
3. USE GALVANIZED ASTM A325 HIGH STRENGTH ø 19 (3/4") BOLTS IN ø 21 (13/16") HOLES FOR STRUCTURAL ATTACHMENT.
4. ALL HOLES MADE IN TRAIN CARRYING MEMBERS SHALL BE DRILLED FULL SIZE. BURNING AND REAMING OF HOLES IS NOT ALLOWED.
5. HOT DIP GALVANIZE ALL STEEL AFTER WELDING AND DRILLING, ASTM A123.
6. ALL TIMBER SHALL BE DENSE STRUCTURAL GRADE YELLOW PINE PRESSURE TREATED WITH AWPA TYPE P1(95) FOR CREO−PINE TO A NET RETENTION OF 128 kg/cu. m (8 lb/cu. ft). SUPPORT HARDWARE FOR TIMBER AND PORTION OF STRUCTURE COVERED BY SUPPORT HARDWARE SHALL BE PAINTED WITH ONE COAT OF RUSTPROOFING PAINT.
7. THROUGH BOLTS SHALL BE 19 (3/4") A307, GALVANIZED.
8. ALL DIMENSIONS ARE IN MILLIMETERS UNLESS SHOWN OTHERWISE.

CHICAGO TRANSIT AUTHORITY
ENGINEERING

SENSITIVE SECURITY INFORMATION

WARNING: THIS RECORD CONTAINS SENSITIVE SECURITY INFORMATION THAT IS CONTROLLED UNDER 49 CFR PARTS 15 AND 1520. NO PART OF THIS RECORD MAY BE DISCLOSED TO PERSONS WITHOUT A "NEED TO KNOW", AS DEFINED IN 49 CFR PARTS 15 AND 1520, EXCEPT WITH WRITTEN APPROVAL OF THE ADMINISTRATOR OF THE TRANSPORTATION SECURITY ADMINISTRATION OR THE SECRETARY OF TRANSPORTATION. UNAUTHORIZED RELEASE MAY RESULT IN CIVIL PENALTY OR OTHER ACTION. FOR U.S. GOVERNMENT AGENCIES, PUBLIC DISCLOSURE IS GOVERNED BY 5 U.S.C. 552 AND 49 CFR PARTS 15 AND 1520.

DRAWING SCALE IS NOT GUARANTEED.
CTA ASSUMES NO RISK OF LIABILITY FOR ERRORS CAUSED, DIRECTLY OR INDIRECTLY, BY SCALING OF THIS DRAWING.

STANDARD TRACTION POWER DRAWINGS

IN CHARGE	S. MATHEW
APPROVED BY	J. HARPER
CHECKED BY	M. PEREZ / R. JAMES
DESIGNED BY	CTA
DRAWN BY	CTA
PROJECT NO	
FILE NAME	

MARK	DATE	DESCRIPTION
01	01 AUG 2013	CAD FORMATTED
00	01 MAR 2013	NEW STANDARD

LOCATION IDENTIFIER:

ELEVATED TRACK CABLE DEAD AND BRACKET DETAILS

STP - 202

DESIGN BY:										
DRAWN BY:										
CHECKED BY:										
APPROVED BY:		4	7/3/2023	ISSUED FOR BID	BJ	EM	SM			
CDOT/APPROVED BY:		NO.	DATE	REVISIONS	DES.	DRW.	CHK.	DCCO	CDOT	

TRANSYSTEMS
222 SOUTH RIVERSIDE PLAZA SUITE 610
CHICAGO, ILLINOIS 60606

SKIDMORE, OWINGS & MERRILL LLP
224 SOUTH MICHIGAN AVENUE, SUITE 1000
CHICAGO, ILLINOIS 60604

FACET ENGINEERING
DBE/MBE CERTIFIED
Performance • Respect • Initiation • Dedication • Experience
FACET ENGINEERING
4316 NORTH ELSTON AVENUE
CHICAGO, ILLINOIS 60641

CHICAGO DEPARTMENT OF TRANSPORTATION
DIVISION OF ENGINEERING

STATE / LAKE LOOP ELEVATED STATION
200 NORTH STATE STREET, CHICAGO, IL 60601

TRACTION POWER - STP-202 ELEVATED TRACK - CABLE DEAD END DETAILS

CDOT PROJECT D-1-209 | DATE: 9/9/2022

SPEC. NO.

DRAWING NO. ET-505

REVISION NO.

INSTALLATION INSTRUCTIONS:

1. SHANK OF EYEBOLT SHALL BE IN LINE WITH THE CABLE.
2. THE EYE OF THE EYEBOLT SHALL BE IN THE VERTICAL PLANE.
3. WHEN NECESSARY TO DEAD END DIRECTLY TO STEEL, USE TWO INSULATORS AND MAINTAIN A MINIMUM OF 152 (6") CLEARANCE FROM THE NEAREST EDGE OF THE SUPPORT STEEL.
4. SINGLE OR DOUBLE BARREL SCREW JACK CLAMP ADJACENT TO THE BARRELSHALL BE COVERED WITH A SINGLE HALF-LAPPED LAYER OF SCOTCH 2210 VINYL MASTIC TAPE.

MATERIAL PER POSITIVE DEAD END	
ITEM	QUANTITY
INSULATOR	1
EYEBOLT	1
NUT	2
SQUARE WASHER	1
SCREW JACK CLAMP	1
SCREW JACK EYESTUD	1

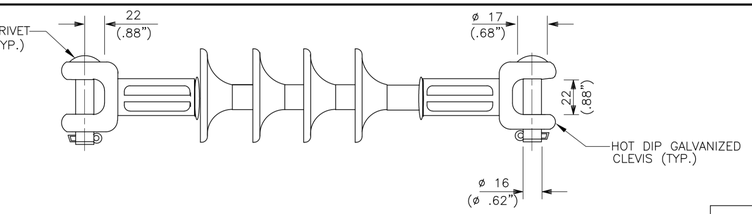

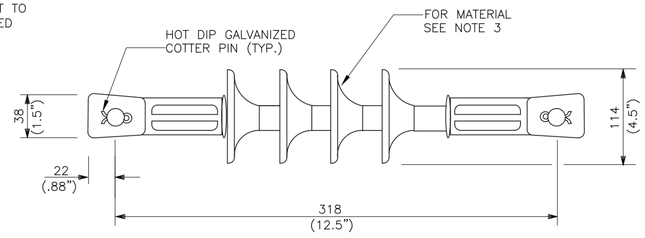

1 STP-203 DETAIL OF POSITIVE CABLE DEAD END / INSULATOR

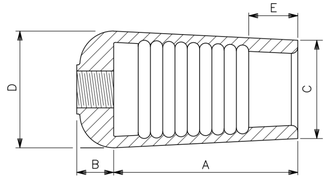

MATERIAL – ALUMINUM BRONZE ASTM B30, ALLOY 954 CU–86%, FE–4%, AL–10%

SINGLE BARREL SCREW JACK DIMENSIONS					
CABLE SIZE	A	B	C	D	E
500KCMIL	67 (2 5/8")	16 (5/8")	30 (1 3/16")	41 (1 5/8")	13 (1/2")
1000KCMIL	89 (3 1/2")	19 (3/4")	45 (1 3/4")	54 (2 1/8")	25 (1")
1500KCMIL	95 (3 3/4")	19 (3/4")	51 (2")	60 (2 3/8")	25 (1")
2000KCMIL	114 (4 1/2")	25 (1")	56 (2 3/16")	67 (2 5/8")	38 (1 1/2")

3 STP-203 DETAIL OF SINGLE BARREL SCREW JACK END CLAMP

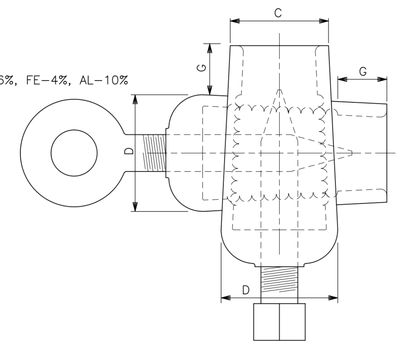

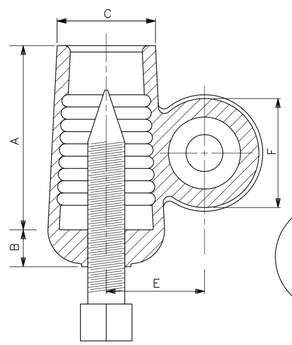

MATERIAL – ALUMINUM BRONZE ASTM B30, ALLOY 954 CU–86%, FE–4%, AL10%

RIGHT ANGLE SCREW JACK CLAMP DIMENSIONS							
CABLE SIZE	A	B	C	D	E	F	G
500KCMIL	67 (2 5/8")	16 (5/8")	30 (1 3/16")	41 (1 5/8")	35 (1 3/8")	37 (1 7/16")	13 (1/2")
1000KCMIL	89 (3 1/2")	19 (3/4")	45 (1 3/4")	54 (2 1/8")	45 (1 3/4")	51 (2")	25 (1")
1500KCMIL	95 (3 3/4")	19 (3/4")	51 (2")	60 (2 3/8")	51 (2")	57 (2 1/4")	25 (1")
2000KCMIL	114 (4 1/2")	25 (1")	56 (2 3/16")	67 (2 5/8")	57.2 (2 1/4")	64 (2 1/2")	38 (1 1/2")

4 STP-203 DETAIL OF RIGHT ANGLE DOUBLE BARREL SCREW JACK DEAD END CLAMP

NOTES:

1. FOR INSTALLATION OF STUD IN SCREW JACK CLAMP SEE DETAIL "5" AND TABLE FOR DIMENSION "X".
2. ALL TIMBER SHALL BE DENSE STRUCTURAL GRADE YELLOW PINE PRESSURE TREATED WITH AWPA TYPE P1(95) FOR CREO–PINE TO NET RETENTION OF 128 kg/cu. m (8 lb/cu. ft.). SUPPORT HARDWARE FOR TIMBER AND PORTION OF STRUCTURE COVERED BY SUPPORT HARDWARE SHALL BE PAINTED WITH ONE COAT OF RUSTPROOFING PAINT, MATCHING THE EXISTING COLOR OF THE STRUCTURE UNLESS OTHERWISE SPECIFIED.
3. MATERIAL FOR POSITIVE DEAD END INSULATOR IS POLYMER EPDM.
4. ALL DIMENSIONS ARE IN MILLIMETERS UNLESS OTHERWISE NOTED.

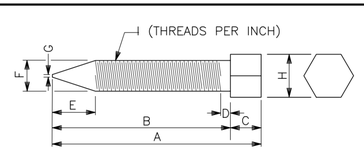

MATERIAL – SILICON ALUMINUM BRONZE ASTM B30, ALLOY 956, CU–91%, SI–2%, AL–7%

STUD DIMENSIONS									
SIZE	A	B	C	D	E	F	G	H	I
16 (5/8")	108 (4 1/4")	92 (3 5/8)	16 (5/8")	4.8 (3/16")	22 (7/8")	16 (5/8")	1.32 (.052")	22 (7/8")	11
19 (3/4")	133 (5 1/4")	114 (4 1/2")	19 (3/4")	6.4 (1/4")	29 (1 1/8")	19 (3/4")	0.86 (.034")	25 (1")	10

2 STP-203 DETAIL OF HEX HEAD BOLT FOR SCREW JACK CLAMP

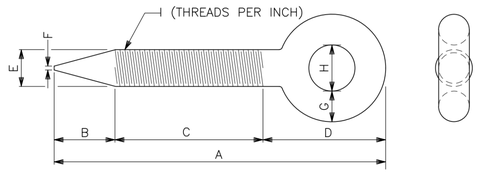

MATERIAL – ALUMINUM BRONZE ASTM B30, ALLOY 955 CU–81%, NI–4%, FE–4%, AL–11%

STUD DIMENSIONS									
STUD SIZE	A	B	C	D	E	F	G	H	I
16 (5/8")	171 (6 3/4")	22 (7/8")	89 (3 1/2")	60 (2 3/8")	16 (5/8")	0.6 (.022")	16 (5/8")	24 (15/16")	11
19 (3/4")	171 (6 3/4")	32 (1 1/4")	76 (3")	64 (2 1/2")	19 (3/4")	2.0 (.080")	16 (5/8")	24 (15/16")	10

6 STP-203 DETAIL OF EYESTUD FOR SCREW JACK CLAMP

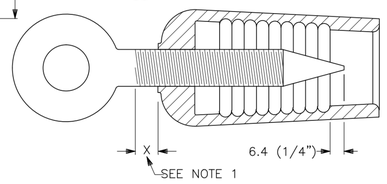

BARREL SIZE	STUD SIZE	DIM. X
500KCMIL	16 (5/8")	35 (1 3/8")
1000KCMIL	19 (3/4")	19 (3/4")
1500KCMIL	16 (3/4")	13 (1/2")
2000KCMIL	19 (3/4")	0.0 (0")

5 STP-203 DETAIL OF EYESTUD INSTALLATION INSTALLATION

CHICAGO TRANSIT AUTHORITY
ENGINEERING

SENSITIVE SECURITY INFORMATION

WARNING: THIS RECORD CONTAINS SENSITIVE SECURITY INFORMATION THAT IS CONTROLLED UNDER 49 CFR PARTS 15 AND 1520. NO PART OF THIS RECORD MAY BE DISCLOSED TO PERSONS WITHOUT A "NEED TO KNOW", AS DEFINED IN 49 CFR PARTS 15 AND 1520, EXCEPT WITH THE WRITTEN PERMISSION OF THE ADMINISTRATOR OF THE TRANSPORTATION SECURITY ADMINISTRATION OR THE SECRETARY OF TRANSPORTATION. UNAUTHORIZED RELEASE MAY RESULT IN CIVIL PENALTY OR OTHER ACTION. FOR U.S. GOVERNMENT AGENCIES, PUBLIC DISCLOSURE IS GOVERNED BY 5 U.S.C. 552 AND 49 CFR PARTS 15 AND 1520.

DRAWING SCALE IS NOT GUARANTEED.
CTA ASSUMES NO RISK OF LIABILITY FOR ERRORS CAUSED, DIRECTLY OR INDIRECTLY, BY SCALING OF THIS DRAWING.

STANDARD TRACTION POWER DRAWINGS

IN CHARGE	S. MATHEW
APPROVED BY	J. HARPER
CHECKED BY	M. PEREZ / R. JAMES
DESIGNED BY	CTA
DRAWN BY	CTA
PROJECT NO	
FILE NAME	

MARK	DATE	DESCRIPTION
02	07 MAR 2014	REV. DETAIL 1,3,4,6 TITLES
01	01 AUG 2013	CAD FORMATTED
00	01 MAR 2013	NEW STANDARD

LOCATION IDENTIFIER:

ELEVATED TRACK
POSITIVE CABLE
DEAD END DETAILS

STP - 203

NO.	DATE	REVISIONS	DES.	DRW.	CHK.	DCCO	CDOT
4	7/3/2023	ISSUED FOR BID	BJ	EM	SM		

DESIGN BY:
DRAWN BY:
CHECKED BY:
APPROVED BY:
CDOT/APPROVED BY:

TRANSYSTEMS
222 SOUTH RIVERSIDE PLAZA SUITE 610
CHICAGO, ILLINOIS 60606

SKIDMORE, OWINGS & MERRILL LLP
224 SOUTH MICHIGAN AVENUE, SUITE 1000
CHICAGO, ILLINOIS 60604

FACET ENGINEERING
4316 NORTH ELSTON AVENUE
CHICAGO, ILLINOIS 60641

CHICAGO DEPARTMENT OF TRANSPORTATION
DIVISION OF ENGINEERING

STATE / LAKE LOOP ELEVATED STATION
200 NORTH STATE STREET, CHICAGO, IL 60601

TRACTION POWER - STP-203 ELEVATED TRACK - POSITIVE CABLE DEAD END DETAILS

CDOT PROJECT D-1-209 | DATE: 9/9/2022

SPEC. NO.

DRAWING NO. ET-506

REVISION NO.

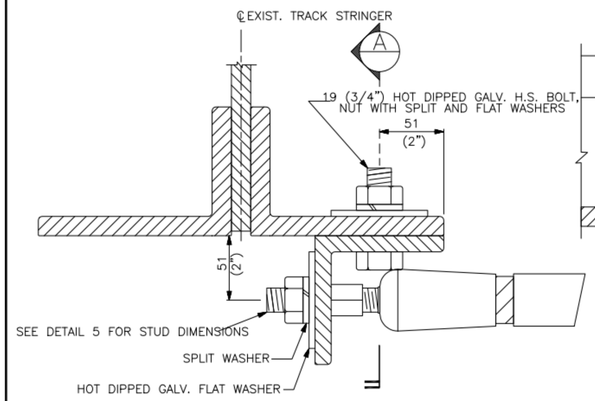

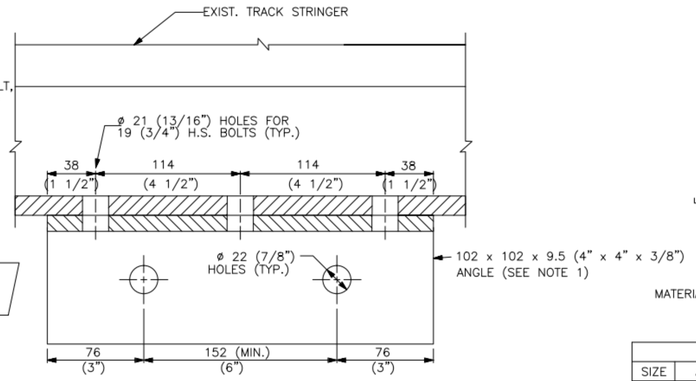

A STP-204 SECTION
(SHOWN WITHOUT CABLE, SCREW JACK CLAMP, AND BOLTS)

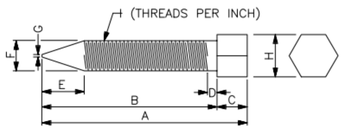

MATERIAL – SILICON ALUMINUM BRONZE ASTM B30, ALOY 956, CU–91%, SI–2%, AL–7%

STUD DIMENSIONS									
SIZE	A	B	C	D	E	F	G	H	I
16 (5/8")	108 (4 1/4")	92 (3 5/8")	16 (5/8")	4.8 (3/16")	22 (7/8")	16 (5/8")	1.32 (.052")	22 (7/8")	11
19 (3/4")	133 (5 1/4")	114 (4 1/2")	19 (3/4")	6.4 (1/4")	29 (1 1/8")	19 (3/4")	0.86 (.034")	25 (1")	10

1 STP-204 DETAIL OF NEGATIVE CABLE DEAD END ASSEMBLY

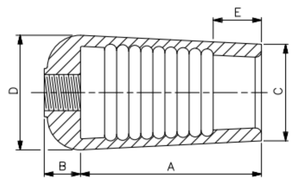

MATERIAL – ALUMINUM BRONZE ASTM B30, ALLOY 954 CU–86%, FE–4%, AL10

SINGLE BARREL SCREW JACK DIMENSIONS					
CABLE SIZE	A	B	C	D	E
500KCMIL	67 (2 5/8")	16 (5/8")	30 (1 3/16")	41 (1 5/8")	13 (1/2")
1000KCMIL	89 (3 1/2")	19 (3/4")	44.5 (1 3/4")	54 (2 1/8")	25 (1")
1500KCMIL	95 (3 3/4")	19 (3/4")	51 (2")	60 (2 3/8")	25 (1")
2000KCMIL	114 (4 1/2")	25 (1")	56 (2 3/16")	67 (2 5/8")	38 (1 1/2")

3 STP-204 DETAIL OF SINGLE SCREW JACK DEAD END CLAMP

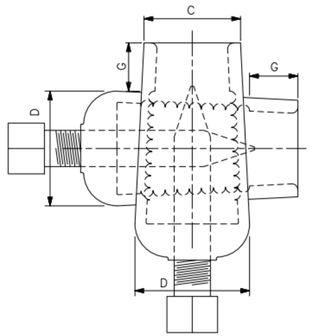

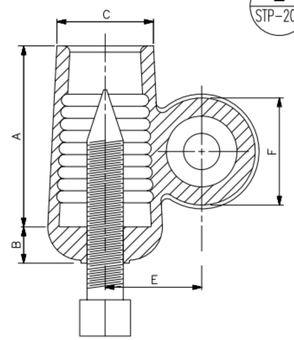

MATERIAL – ALUMINUM BRONZE ASTM B30, ALLOY 954 CU–86%, FE–4%, AL10%

RIGHT ANGLE SCREW JACK CLAMP DIMENSIONS							
CABLE SIZE	A	B	C	D	E	F	G
500KCMIL	67 (2 5/8")	16 (5/8")	30 (1 3/16")	41 (1 5/8")	35 (1 3/8")	36.5 (1 7/16")	13 (1/2")
1000KCMIL	89 (3 1/2")	19 (3/4")	44.5 (1 3/4")	54 (2 1/8")	44.5 (1 3/4")	51 (2")	25 (1")
1500KCMIL	95 (3 3/4")	19 (3/4")	51 (2")	60 (2 3/8")	51 (2")	54 (2 1/8")	25 (1")
2000KCMIL	114 (4 1/2")	25 (1")	56 (2 3/16")	67 (2 5/8")	57 (2 1/4")	63.5 (2 1/2")	38 (1 1/2")

4 STP-204 DETAIL OF RIGHT ANGLE DOUBLE BARREL SCREW JACK DEAD END CLAMP

2 STP-204 DETAIL OF HEX HEAD BOLT FOR SCREW JACK CLAMP

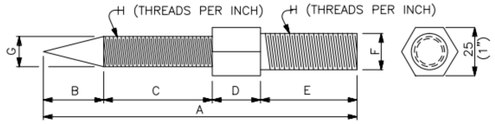

MATERIAL – DURONZE #642 OR B150

STUD DIMENSIONS								
SIZE	A	B	C	D	E	F	G	H
16 (5/8")	165 (6 1/2")	32 (1 1/4")	57 (2 1/4")	25 (1")	51 (2")	19 (3/4")	16 (5/8")	11
19 (3/4")	197 (7 3/4")	32 (1 1/4")	86 (3 3/8")	29 (1 1/8")	51 (2")	19 (3/4")	19 (3/4")	10

5 STP-204 DETAIL OF STUD FOR SCREW JACK CLAMP

NOTES:

1. LENGTH OF ANGLE DEPENDS ON NUMBER OF CABLES INSTALLED.
2. SINGLE OR DOUBLE BARREL SCREW JACK CLAMP SHALL BE COVERED WITH A SINGLE HALF–LAPPED LAYER OF SCOTCH 2210 VINYL MASTIC TAPE.
3. ALL DIMENSIONS ARE IN MILLIMETERS UNLESS SHOWN OTHERWISE.

CHICAGO TRANSIT AUTHORITY
ENGINEERING

SENSITIVE SECURITY INFORMATION

WARNING: THIS RECORD CONTAINS SENSITIVE SECURITY INFORMATION THAT IS CONTROLLED UNDER 49 CFR PARTS 15 AND 1520. NO PART OF THIS RECORD MAY BE DISCLOSED TO PERSONS WITHOUT A "NEED TO KNOW" AS DEFINED IN CFR PARTS 15 AND 1520, EXCEPT WITH THE WRITTEN PERMISSION OF THE ADMINISTRATOR OF THE TRANSPORTATION SECURITY ADMINISTRATION OR THE SECRETARY OF TRANSPORTATION. UNAUTHORIZED RELEASE MAY RESULT IN CIVIL PENALTY OR OTHER ACTION. FOR U.S. GOVERNMENT AGENCIES, PUBLIC DISCLOSURE IS GOVERNED BY 5 U.S.C. 552 AND 49 CFR PARTS 15 AND 1520.

DRAWING SCALE IS NOT GUARANTEED.
CTA ASSUMES NO RISK OF LIABILITY FOR ERRORS CAUSED, DIRECTLY OR INDIRECTLY, BY SCALING OF THIS DRAWING.

STANDARD TRACTION POWER
DRAWINGS

IN CHARGE	S. MATHEW
APPROVED BY	J. HARPER
CHECKED BY	M. PEREZ / R. JAMES
DESIGNED BY	CTA
DRAWN BY	CTA
PROJECT NO	
FILE NAME	

MARK	DATE	DESCRIPTION
	12–DEC–18	ISSUED FOR EXECUTION
02	20–APR–18	FINAL RFP
01	01 AUG 2013	CAD FORMATTED
00	01 MAR 2013	NEW STANDARD

LOCATION IDENTIFIER:

ELEVATED TRACK
NEGATIVE CABLE
DEAD END DETAILS

STP - 204

DESIGN BY:									
DRAWN BY:									
CHECKED BY:									
APPROVED BY:		4	7/3/2023	ISSUED FOR BID	BJ	SRM	SM		
CDOT/APPROVED BY:		NO.	DATE	REVISIONS	DES.	DRW.	CHK.	DCCO	CDOT

TRANSYSTEMS
222 SOUTH RIVERSIDE PLAZA SUITE 610
CHICAGO, ILLINOIS 60606

SKIDMORE, OWINGS & MERRILL LLP
224 SOUTH MICHIGAN AVENUE, SUITE 1000
CHICAGO, ILLINOIS 60604

FACET ENGINEERING
4316 NORTH ELSTON AVENUE
CHICAGO, ILLINOIS 60641

CHICAGO DEPARTMENT OF TRANSPORTATION
DIVISION OF ENGINEERING

STATE / LAKE LOOP ELEVATED STATION
200 NORTH STATE STREET, CHICAGO, IL 60601

TRACTION POWER - STP-204 ELEVATED TRACK NEGATIVE CABLE DEAD END DETAILS

CDOT PROJECT D-1-209 | DATE: 9/9/2022

SPEC. NO.

DRAWING NO. ET-507

REVISION NO.

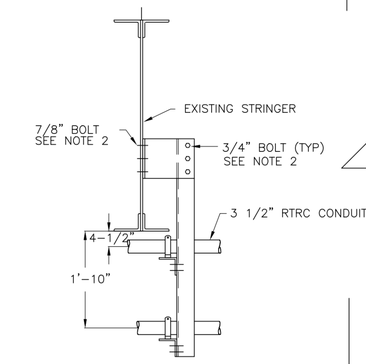

A STP-207 SECTION

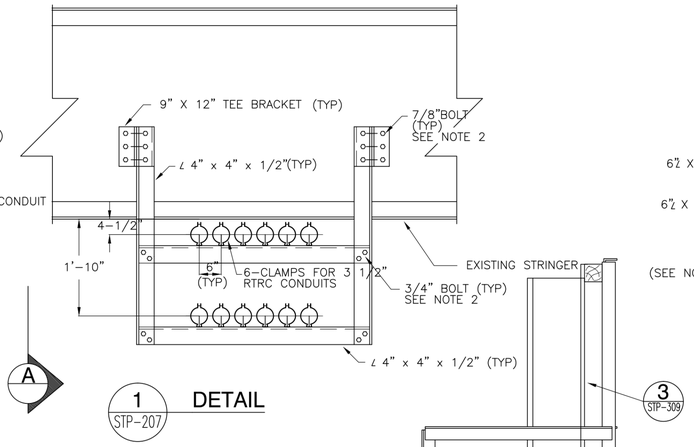

1 STP-207 DETAIL

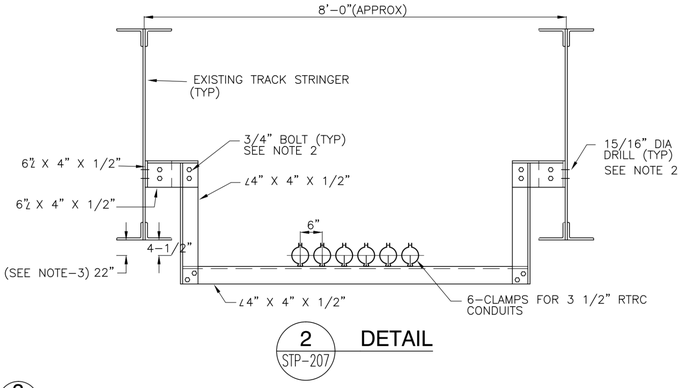

2 STP-207 DETAIL

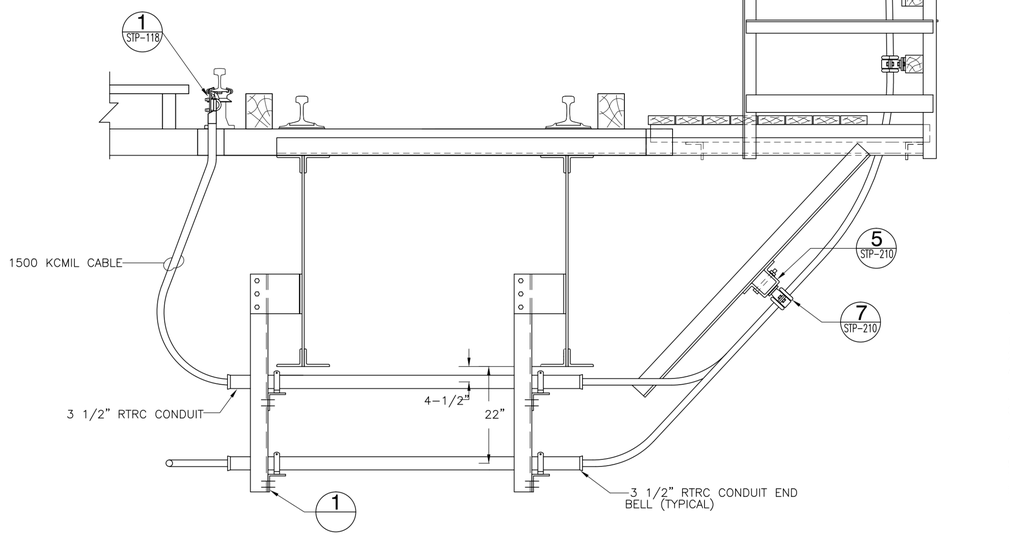

3 STP-207 DETAIL

NOTES:

1. FOR GENERAL NOTES, ABBREVIATIONS AND SYMBOLS LIST SEE SHEET STP-4.
2. CONNECT NEW STEEL TO EXISTING CTA STRUCTURE WITH 7/8" H.S.BOLTS. ALL OTHER CONNECTIONS SHOULD BE MADE USING 3/4" H.S.BOLTS.
3. DETAIL-3 IS SIMILAR TO DETAIL-2 EXCEPT THE DISTANCE FROM THE BOTTOM OF THE FLANGE TO THE CENTERLINE OF THE CONDUIT IS 22".
4. ALL CLEARENCES TO GRADE SHALL BE 14'-6" MINIMUM (TYPICAL ALL CASES)
5. HIGH STRENGTH BOLTS SHALL BE USED FOR ALL STRUCTURAL JOINTS. TORQUING AND TESTING THE BOLTS SHALL BE AS PER THE STRUCTURAL STEEL SPECIFICATIONS.

CHICAGO TRANSIT AUTHORITY
ENGINEERING

SENSITIVE SECURITY INFORMATION

WARNING: THIS RECORD CONTAINS SENSITIVE SECURITY INFORMATION THAT IS CONTROLLED UNDER 49 CFR PARTS 15 AND 1520. NO PART OF THIS RECORD MAY BE DISCLOSED TO PERSONS WITHOUT A "NEED TO KNOW" AS DEFINED IN CFR PARTS 15 AND 1520, EXCEPT WITH THE WRITTEN PERMISSION OF THE ADMINISTRATOR OF THE TRANSPORTATION SECURITY ADMINISTRATION OR THE SECRETARY OF TRANSPORTATION. UNAUTHORIZED RELEASE MAY RESULT IN CIVIL PENALTY OR OTHER ACTION. FOR U.S. GOVERNMENT AGENCIES, PUBLIC DISCLOSURE IS GOVERNED BY 5 U.S.C. 552 AND 49 CFR PARTS 15 AND 1520.

DRAWING SCALE IS NOT GUARANTEED.
CTA ASSUMES NO RISK OF LIABILITY FOR ERRORS CAUSED, DIRECTLY OR INDIRECTLY, BY SCALING OF THIS DRAWING.

STANDARD TRACTION POWER
DRAWINGS

IN CHARGE	S. MATHEW
APPROVED BY	J. HARPER
CHECKED BY	M. PEREZ / R. JAMES
DESIGNED BY	CTA
DRAWN BY	CTA
PROJECT NO	
FILE NAME	

MARK	DATE	DESCRIPTION
02	01 AUG 2015	REVISED NOTE 5
01	01 AUG 2013	CAD FORMATTED
00	01 MAR 2013	NEW STANDARD

LOCATION IDENTIFIER:

TYPICAL AERIAL CABLE SUPPORT DETAILS SHEET 1 OF 2

STP - 207

NO.	DATE	REVISIONS	DES.	DRW.	CHK.	DCCO	CDOT
4	7/3/2023	ISSUED FOR BID	BJ	EM	SM		

DESIGN BY:
DRAWN BY:
CHECKED BY:
APPROVED BY:
CDOT/APPROVED BY:

TRANSYSTEMS
222 SOUTH RIVERSIDE PLAZA SUITE 610
CHICAGO, ILLINOIS 60606

SKIDMORE, OWINGS & MERRILL LLP
224 SOUTH MICHIGAN AVENUE, SUITE 1000
CHICAGO, ILLINOIS 60604

FACET ENGINEERING
4316 NORTH ELSTON AVENUE
CHICAGO, ILLINOIS 60641

CHICAGO DEPARTMENT OF TRANSPORTATION
DIVISION OF ENGINEERING

STATE / LAKE LOOP ELEVATED STATION
200 NORTH STATE STREET, CHICAGO, IL 60601

TRACTION POWER - STP-207 TYPICAL AERIAL CABLE SUPPORT DETAILS

CDOT PROJECT D-1-209

DATE: 9/9/2022

SPEC. NO.

DRAWING NO. ET-508

REVISION NO.

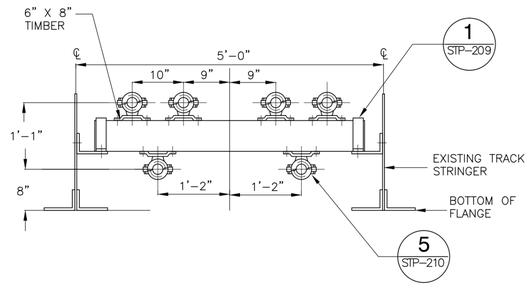

1 STP-208 DETAIL OF TYPICAL CABLE SUPPORT

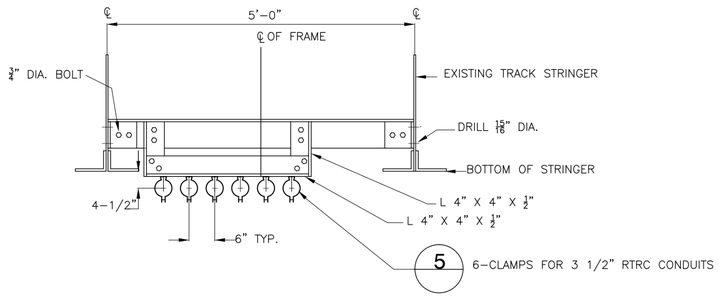

2 STP-208 DETAIL OF TYPICAL CONDUIT SUPPORT

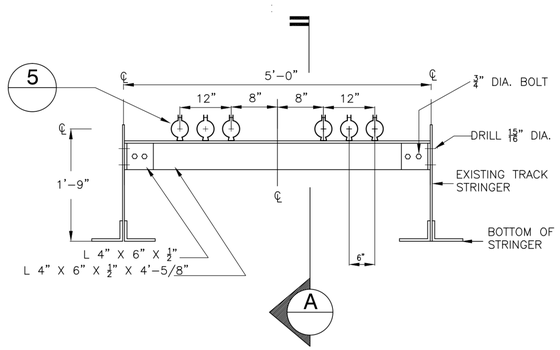

3 STP-208 DETAIL OF TYPICAL CONDUIT SUPPORT

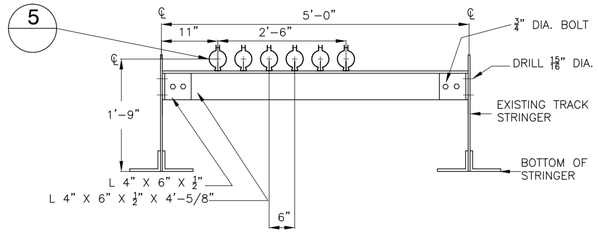

4 STP-208 DETAIL OF TYPICAL CONDUIT SUPPORT

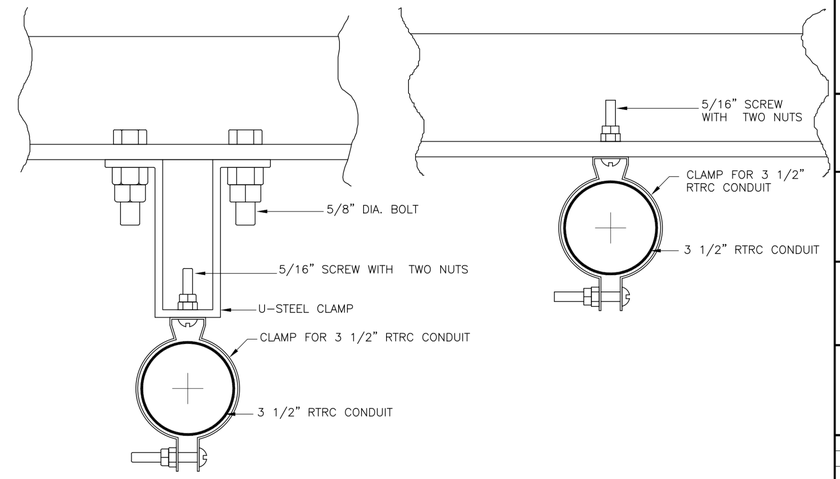

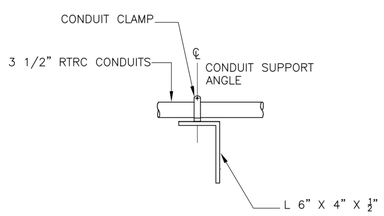

A STP-208 SECTION

5 STP-208 DETAIL OF TYPICAL CONDUIT SUPPORT

NOTES:
1. FOR GENERAL NOTES, ABBREVIATIONS AND SYMBOL LIST SEE SHEET STP-4.
2. CONNECT ALL NEW STEEL TO EXISTING CTA STRUCTURE WITH 7/8" H.S. BOLTS. ALL OTHER CONNECTIONS SHOULD BE MADE USING 3/4" H.S.BOLTS.
3. ALL HOLES MADE IN TRAIN CARRYING MEMBERS SHALL BE DRILLED FULL SIZE (15/16"DIA). FOR 7/8" DIA. H.S.BOLTS UNLESS NOTED OTHERWISE BURNING AND REAMING NOT ALLOWED.
4. LL NEW HOLES IN TRACK STRINGER BOTTOM FLANGE ANGLES ARE TO BE STAGGERED WITH EXISTING FASTENERS.
5. ALL NEW STEEL TO BE A36.
6. ALL CLEARANCES TO GRADE SHALL BE 14'-6" MINIMUM. (TYPICAL ALL CASES)

CHICAGO TRANSIT AUTHORITY
ENGINEERING

SENSITIVE SECURITY INFORMATION

WARNING: THIS RECORD CONTAINS SENSITIVE SECURITY INFORMATION THAT IS CONTROLLED UNDER 49 CFR PARTS 15 AND 1520. NO PART OF THIS RECORD MAY BE DISCLOSED TO PERSONS WITHOUT A "NEED TO KNOW" AS DEFINED IN CFR PARTS 15 AND 1520, EXCEPT WITH THE WRITTEN PERMISSION OF THE ADMINISTRATOR OF THE TRANSPORTATION SECURITY ADMINISTRATION OR THE SECRETARY OF TRANSPORTATION. UNAUTHORIZED RELEASE MAY RESULT IN CIVIL PENALTY OR OTHER ACTION. FOR U.S. GOVERNMENT AGENCIES, PUBLIC DISCLOSURE IS GOVERNED BY 5 U.S.C. 552 AND 49 CFR PARTS 15 AND 1520.

DRAWING SCALE IS NOT GUARANTEED.
CTA ASSUMES NO RISK OF LIABILITY FOR ERRORS CAUSED, DIRECTLY OR INDIRECTLY, BY SCALING OF THIS DRAWING.

STANDARD TRACTION POWER
DRAWINGS

IN CHARGE	S. MATHEW
APPROVED BY	J. HARPER
CHECKED BY	M. PEREZ / R. JAMES
DESIGNED BY	CTA
DRAWN BY	CTA
PROJECT NO	
FILE NAME	

MARK	DATE	DESCRIPTION
01	01 AUG 2013	CAD FORMATTED
00	01 MAR 2013	NEW STANDARD

LOCATION IDENTIFIER:

TYPICAL AERIAL CABLE SUPPORT DETAILS SHEET 2 OF 2

STP - 208

DESIGN BY:										
DRAWN BY:										
CHECKED BY:										
APPROVED BY:		4	7/3/2023	ISSUED FOR BID	BJ	EM	SM			
CDOT/APPROVED BY:		NO.	DATE	REVISIONS	DES.	DRW.	CHK.	DCCO	CDOT	

TranSystems
TRANSYSTEMS
222 SOUTH RIVERSIDE PLAZA SUITE 610
CHICAGO, ILLINOIS 60606

SOM
SKIDMORE, OWINGS & MERRILL LLP
224 SOUTH MICHIGAN AVENUE, SUITE 1000
CHICAGO, ILLINOIS 60604

FACET ENGINEERING
DBE/MBE CERTIFIED
Mechanical • Electrical • Communication • SCADA • Traction Power
Performance • Respect • Initiation • Dedication • Experience
FACET ENGINEERING
4316 NORTH ELSTON AVENUE
CHICAGO, ILLINOIS 60641

CDOT
CHICAGO DEPARTMENT OF TRANSPORTATION
DIVISION OF ENGINEERING

STATE / LAKE LOOP ELEVATED STATION
200 NORTH STATE STREET, CHICAGO, IL 60601

TRACTION POWER - STP-208 TYPICAL AERIAL CABLE SUPPORT DETAILS

CDOT PROJECT D-1-209 | DATE: 9/9/2022

SPEC. NO.

DRAWING NO. ET-509

REVISION NO.

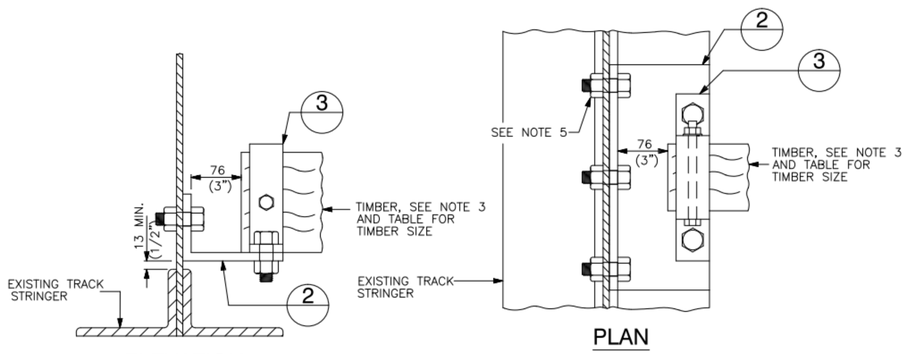

1 STP-209 DETAIL OF WEB MOUNTED CROSS ARM TIMBER

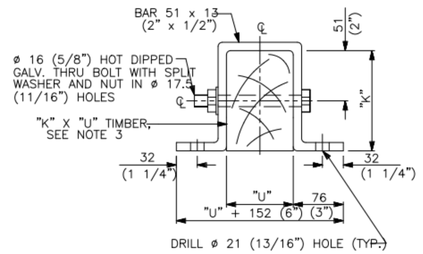

TABLE OF VARIABLE DIMENSIONS "K" & "U" ARE TIMBER SIZES						REMARKS
U-CLAMP	"K"	"U"	"Q"	"P"	"R"	
TYPE "A"	102 (4")	102 (4")	191 (7 1/2")	343 (13 1/2")	140 (5 1/2")	–
TYPE "B"	152 (6")	102 (4")	191 (7 1/2")	343 (13 1/2")	140 (5 1/2")	CROSS ARM
TYPE "C"	152 (6")	152 (6")	241 (9 1/2")	394 (15 1/2")	165 (6 1/2")	–
TYPE "D"	152 (6")	203 (8")	292 (11 1/2")	445 (17 1/2")	191 (7 1/2")	DEAD END

3 STP-209 DETAIL OF "U" CLAMP

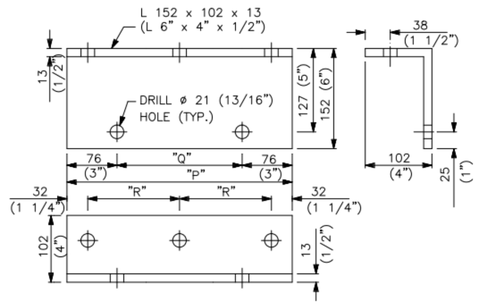

2 STP-209 DETAIL OF LUG ANGLE

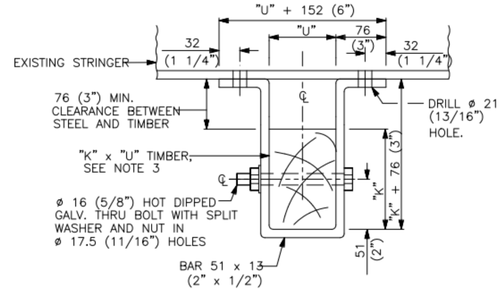

4 STP-209 DETAIL OF "U" CLAMP OUTSIDE STRAP

NOTES:

1. LUG ANGLE SHALL BE MOUNTED HORIZONTALLY FOR CROSS ARM SUPPORT WITH TIMBER MOUNTED ABOVE LUG ANGLE.
2. LOCATION OF HOLES DRILLED IN TRACK STRINGER FLANGE ANGLES FOR MOUNTING U-CLAMPS SHALL BE AS RECOMMENDED IN THE AMERICAN INSTITUTE OF STEEL CONSTRUCTION (LATEST EDITION).
3. ALL TIMBER SHALL BE DENSE STRUCTURAL GRADE YELLOW PINE PRESSURE TREATED WITH AWPA TYPE P1(95) FOR CREO-PINE TO A NET RETENTION OF 128 kg/cu. m (8 lb/cu. ft). SUPPORT HARDWARE FOR TIMBER AND PORTION OF STRUCTURE COVERED BY SUPPORT HARDWARE SHALL BE PAINTED WITH ONE COAT OF RUSTPROOFING PAINT.
4. ALL HOLES MADE IN TRAIN CARRYING MEMBERS SHALL BE DRILLED FULL SIZE. BURNING AND REAMING OF HOLES IS NOT ALLOWED.
5. USE GALVANIZED ASTM A325 HIGH STRENGTH ø 19 (3/4") BOLTS IN ø 21 (13/16") HOLES FOR STRUCTURAL ATTACHMENT.
6. ALL DIMENSIONS ARE IN MILLIMETERS UNLESS SHOWN OTHERWISE.

CHICAGO TRANSIT AUTHORITY
ENGINEERING

SENSITIVE SECURITY INFORMATION

WARNING: THIS RECORD CONTAINS SENSITIVE SECURITY INFORMATION THAT IS CONTROLLED UNDER 49 CFR PARTS 15 AND 1520. NO PART OF THIS RECORD MAY BE DISCLOSED TO PERSONS WITHOUT A "NEED TO KNOW" AS DEFINED IN CFR PARTS 15 AND 1520, EXCEPT WITH THE WRITTEN PERMISSION OF THE ADMINISTRATOR OF THE TRANSPORTATION SECURITY ADMINISTRATION OR THE SECRETARY OF TRANSPORTATION. UNAUTHORIZED RELEASE MAY RESULT IN CIVIL PENALTY OR OTHER ACTION. FOR U.S. GOVERNMENT AGENCIES, PUBLIC DISCLOSURE IS GOVERNED BY 5 U.S.C. 552 AND 49 CFR PARTS 15 AND 1520.

DRAWING SCALE IS NOT GUARANTEED.
CTA ASSUMES NO RISK OF LIABILITY FOR ERRORS CAUSED, DIRECTLY OR INDIRECTLY, BY SCALING OF THIS DRAWING.

STANDARD TRACTION POWER
DRAWINGS

IN CHARGE	S. MATHEW
APPROVED BY	J. HARPER
CHECKED BY	M. PEREZ / R. JAMES
DESIGNED BY	CTA
DRAWN BY	CTA
PROJECT NO	
FILE NAME	

MARK	DATE	DESCRIPTION
	12-DEC-18	ISSUED FOR EXECUTION
02	20-APR-18	FINAL RFP
01	01 AUG 2013	CAD FORMATTED
00	01 MAR 2013	NEW STANDARD

LOCATION IDENTIFIER:

ELEVATED TRACK CROSS ARM TIMBER AND SPOOL INSULATOR DETAILS (1 of 2)

STP - 209

DESIGN BY:										
DRAWN BY:										
CHECKED BY:										
APPROVED BY:		4	7/3/2023	ISSUED FOR BID	BJ	EM	SM			
CDOT/APPROVED BY:		NO.	DATE	REVISIONS	DES.	DRW.	CHK.	DCCO	CDOT	

TRANSYSTEMS
222 SOUTH RIVERSIDE PLAZA SUITE 610
CHICAGO, ILLINOIS 60606

SKIDMORE, OWINGS & MERRILL LLP
224 SOUTH MICHIGAN AVENUE, SUITE 1000
CHICAGO, ILLINOIS 60604

FACET ENGINEERING
DBE/MBE CERTIFIED
FACET ENGINEERING
4316 NORTH ELSTON AVENUE
CHICAGO, ILLINOIS 60641

CHICAGO DEPARTMENT OF TRANSPORTATION
DIVISION OF ENGINEERING

STATE / LAKE LOOP ELEVATED STATION
200 NORTH STATE STREET, CHICAGO, IL 60601

TRACTION POWER - STP-209 ELEVATED TRACK CROSS ARM TIMBER AND SPOOL INSULATOR DETAILS (1 OF 2)

CDOT PROJECT D-1-209 | DATE: 9/9/2022

SPEC. NO.

DRAWING NO. ET-510

REVISION NO.

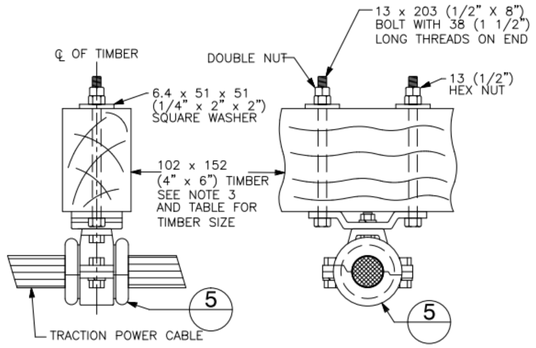

6 STP-210 DETAIL OF SPOOL TYPE INSULATOR CABLE SUPPORT

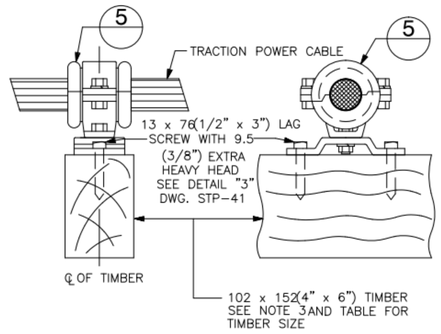

7 STP-210 DETAIL OF SPOOL TYPE INSULATOR CABLE SUPPORT

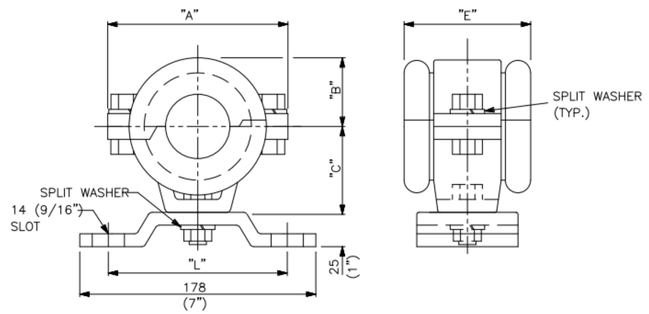

DELTA-STAR SPOOL INSULATOR CABLE SUPPORTS – TYPE "SSL"								
PORCELAIN SPOOLS CATALOG NUMBER	CABLE SIZE	CABLE DIAMETER	DIMENSIONS				"L"	
			"A"	"B"	"C"	"E"	MIN.	MAX.
350109	500KCMIL	32 (1 1/4")	121 (4 3/4")	44 (1 3/4")	57 (2 1/4")	76 (3")	127 (5")	146 (5 3/4")
350115	1500KCMIL	51 (2")	133 (5 1/4")	51 (2")	64 (2 1/2")	95 (3 3/4")	127 (5")	146 (5 3/4")

5 STP-210 DETAILS OF SPOOL INSULATOR

NOTES:

1. LUG ANGLE SHALL BE MOUNTED HORIZONTALLY FOR CROSS ARM SUPPORT WITH TIMBER MOUNTED ABOVE LUG ANGLE.
2. LOCATION OF HOLES DRILLED IN TRACK STRINGER FLANGE ANGLES FOR MOUNTING U-CLAMPS SHALL BE AS RECOMMENDED IN THE AMERICAN INSTITUTE OF STEEL CONSTRUCTION (LATEST EDITION).
3. ALL TIMBER SHALL BE DENSE STRUCTURAL GRADE YELLOW PINE PRESSURE TREATED WITH AWPA TYPE P1(95) FOR CREO-PINE TO A NET RETENTION OF 128 kg/cu. m (8 lb/cu. ft). SUPPORT HARDWARE FOR TIMBER AND PORTION OF STRUCTURE COVERED BY SUPPORT HARDWARE SHALL BE PAINTED WITH ONE COAT OF RUSTPROOFING PAINT.
4. ALL HOLES MADE IN TRAIN CARRYING MEMBERS SHALL BE DRILLED FULL SIZE. BURNING AND REAMING OF HOLES IS NOT ALLOWED.
5. USE GALVANIZED ASTM A325 HIGH STRENGTH ø 19 (3/4") BOLTS IN ø 21 (13/16") HOLES FOR STRUCTURAL ATTACHMENT.
6. ALL DIMENSIONS ARE IN MILLIMETERS UNLESS SHOWN OTHERWISE.

CHICAGO TRANSIT AUTHORITY
ENGINEERING

SENSITIVE SECURITY INFORMATION

WARNING: THIS RECORD CONTAINS SENSITIVE SECURITY INFORMATION THAT IS CONTROLLED UNDER 49 CFR PARTS 15 AND 1520. NO PART OF THIS RECORD MAY BE DISCLOSED TO PERSONS WITHOUT A "NEED TO KNOW" AS DEFINED IN CFR PARTS 15 AND 1520, EXCEPT WITH THE WRITTEN PERMISSION OF THE ADMINISTRATOR OF THE TRANSPORTATION SECURITY ADMINISTRATION OR THE SECRETARY OF TRANSPORTATION. UNAUTHORIZED RELEASE MAY RESULT IN CIVIL PENALTY OR OTHER ACTION. FOR U.S. GOVERNMENT AGENCIES, PUBLIC DISCLOSURE IS GOVERNED BY 5 U.S.C. 552 AND 49 CFR PARTS 15 AND 1520.

DRAWING SCALE IS NOT GUARANTEED. CTA ASSUMES NO RISK OF LIABILITY FOR ERRORS CAUSED, DIRECTLY OR INDIRECTLY, BY SCALING OF THIS DRAWING.

STANDARD TRACTION POWER DRAWINGS

IN CHARGE	S. MATHEW
APPROVED BY	J. HARPER
CHECKED BY	M. PEREZ / R. JAMES
DESIGNED BY	CTA
DRAWN BY	CTA
PROJECT NO	
FILE NAME	

MARK	DATE	DESCRIPTION
	12-DEC-18	ISSUED FOR EXECUTION
02	20-APR-18	FINAL RFP
01	01 AUG 2013	CAD FORMATTED
00	01 MAR 2013	NEW STANDARD

LOCATION IDENTIFIER:

ELEVATED TRACK CROSS ARM TIMBER AND SPOOL INSULATOR DETAILS (2 of 2)

STP - 210

NO.	DATE	REVISIONS	DES.	DRW.	CHK.	DCCO	CDOT
4	7/3/2023	ISSUED FOR BID	BJ	EM	SM		

DESIGN BY:
DRAWN BY:
CHECKED BY:
APPROVED BY:
CDOT/APPROVED BY:

TRANSYSTEMS
222 SOUTH RIVERSIDE PLAZA SUITE 610
CHICAGO, ILLINOIS 60606

SKIDMORE, OWINGS & MERRILL LLP
224 SOUTH MICHIGAN AVENUE, SUITE 1000
CHICAGO, ILLINOIS 60604

FACET ENGINEERING
4316 NORTH ELSTON AVENUE
CHICAGO, ILLINOIS 60641

CHICAGO DEPARTMENT OF TRANSPORTATION
DIVISION OF ENGINEERING

STATE / LAKE LOOP ELEVATED STATION
200 NORTH STATE STREET, CHICAGO, IL 60601

TRACTION POWER - STP-210 ELEVATED TRACK CROSS ARM TIMBER AND SPOOL INSULATOR DETAILS (2 OF 2)

CDOT PROJECT D-1-209

DATE: 9/9/2022

SPEC. NO.

DRAWING NO. ET-511

REVISION NO.

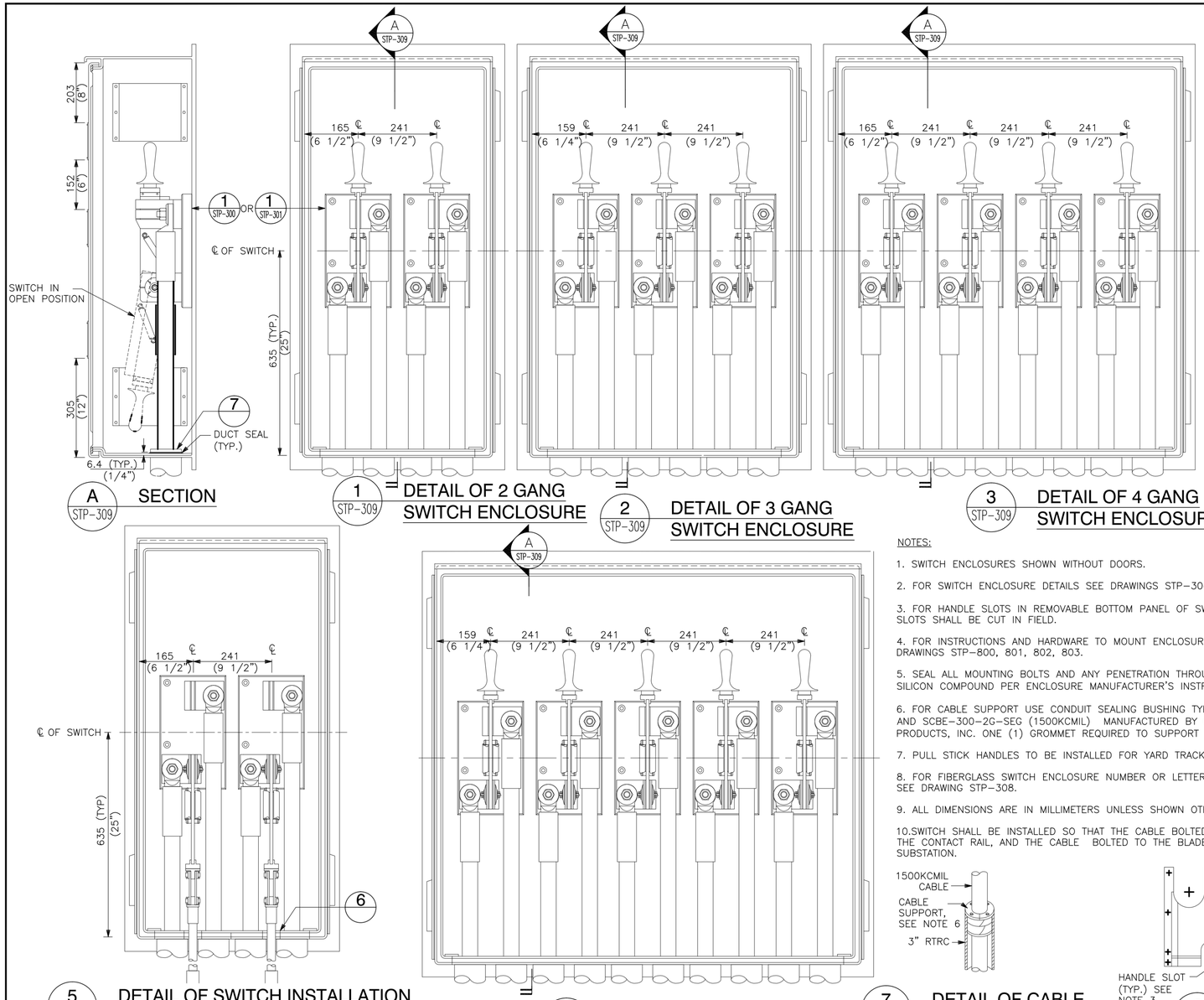

A STP-309 SECTION

1 STP-309 = DETAIL OF 2 GANG SWITCH ENCLOSURE

2 STP-309 = DETAIL OF 3 GANG SWITCH ENCLOSURE

3 STP-309 = DETAIL OF 4 GANG SWITCH ENCLOSURE

5 STP-309 DETAIL OF SWITCH INSTALLATION WITH FULL STICK HANDLE

(IN OPEN POSITION)

4 STP-309 DETAIL OF 5 GANG SWITCH ENCLOSURE

NOTES:

1. SWITCH ENCLOSURES SHOWN WITHOUT DOORS.
2. FOR SWITCH ENCLOSURE DETAILS SEE DRAWINGS STP–304, 305 & 306.
3. FOR HANDLE SLOTS IN REMOVABLE BOTTOM PANEL OF SWITCH ENCLOSURE SEE DETAIL "1". SLOTS SHALL BE CUT IN FIELD.
4. FOR INSTRUCTIONS AND HARDWARE TO MOUNT ENCLOSURE TO MOUNTING FRAME SEE DRAWINGS STP–800, 801, 802, 803.
5. SEAL ALL MOUNTING BOLTS AND ANY PENETRATION THROUGH THE ENCLOSURE WITH RTV SILICON COMPOUND PER ENCLOSURE MANUFACTURER'S INSTRUCTIONS.
6. FOR CABLE SUPPORT USE CONDUIT SEALING BUSHING TYPE CSBE–300P–SEG (500KCMIL) AND SCBE–300–2G–SEG (1500KCMIL) MANUFACTURED BY OZ–GEDNEY CO. OR SPE–30 MAC PRODUCTS, INC. ONE (1) GROMMET REQUIRED TO SUPPORT 500KCMIL CABLE.
7. PULL STICK HANDLES TO BE INSTALLED FOR YARD TRACK SWITCHES ONLY.
8. FOR FIBERGLASS SWITCH ENCLOSURE NUMBER OR LETTER AND ENCLOSURE DESIGNATIONS SEE DRAWING STP–308.
9. ALL DIMENSIONS ARE IN MILLIMETERS UNLESS SHOWN OTHERWISE.
10. SWITCH SHALL BE INSTALLED SO THAT THE CABLE BOLTED TO THE CLIP SIDE IS CONNECTED THE CONTACT RAIL, AND THE CABLE BOLTED TO THE BLADE SIDE IS CONNECTED TO THE SUBSTATION.

7 STP-309 DETAIL OF CABLE SUPPORT INSTALLATION

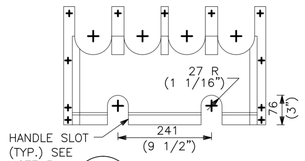

6 STP-309 DETAIL OF BOTTOM PANEL

CHICAGO TRANSIT AUTHORITY
ENGINEERING

SENSITIVE SECURITY INFORMATION

WARNING: THIS RECORD CONTAINS SENSITIVE SECURITY INFORMATION THAT IS CONTROLLED UNDER 49 CFR PARTS 15 AND 1520. NO PART OF THIS RECORD MAY BE DISCLOSED TO PERSONS WITHOUT A "NEED TO KNOW" AS DEFINED IN CFR PARTS 15 AND 1520, EXCEPT WITH THE WRITTEN PERMISSION OF THE ADMINISTRATOR OF THE TRANSPORTATION SECURITY ADMINISTRATION OR THE SECRETARY OF TRANSPORTATION. UNAUTHORIZED RELEASE MAY RESULT IN CIVIL PENALTY OR OTHER ACTION. FOR U.S. GOVERNMENT AGENCIES, PUBLIC DISCLOSURE IS GOVERNED BY 5 U.S.C. 552 AND 49 CFR PARTS 15 AND 1520.

DRAWING SCALE IS NOT GUARANTEED. CTA ASSUMES NO RISK OF LIABILITY FOR ERRORS CAUSED, DIRECTLY OR INDIRECTLY, BY SCALING OF THIS DRAWING.

STANDARD TRACTION POWER DRAWINGS

IN CHARGE	S. MATHEW
APPROVED BY	J. HARPER
CHECKED BY	M. PEREZ / R. JAMES
DESIGNED BY	CTA
DRAWN BY	CTA
PROJECT NO	
FILE NAME	

MARK	DATE	DESCRIPTION
01	01 AUG 2013	CAD FORMATTED
00	01 MAR 2013	NEW STANDARD

LOCATION IDENTIFIER:

KNIFE SWITCH MOUNTING AND INSTALLATION DETAILS

STP - 309

DESIGN BY:									
DRAWN BY:									
CHECKED BY:									
APPROVED BY:		4	7/3/2023	ISSUED FOR BID	BJ	EM	SM		
CDOT/APPROVED BY:		NO.	DATE	REVISIONS	DES.	DRW.	CHK.	DCCO	CDOT

TRANSYSTEMS
222 SOUTH RIVERSIDE PLAZA SUITE 610
CHICAGO, ILLINOIS 60606

SKIDMORE, OWINGS & MERRILL LLP
224 SOUTH MICHIGAN AVENUE, SUITE 1000
CHICAGO, ILLINOIS 60604

FACET ENGINEERING
DBE/MBE CERTIFIED
Performance • Respect • Initiation • Dedication • Experience
FACET ENGINEERING
4316 NORTH ELSTON AVENUE
CHICAGO, ILLINOIS 60641

CHICAGO DEPARTMENT OF TRANSPORTATION
DIVISION OF ENGINEERING

STATE / LAKE LOOP ELEVATED STATION
200 NORTH STATE STREET, CHICAGO, IL 60601

TRACTION POWER - STP-309 KNIFE SWITCH MOUNTING AND INSTALLATION DETAILS

CDOT PROJECT D-1-209 | DATE: 9/9/2022

SPEC. NO.

DRAWING NO. ET-512

REVISION NO.

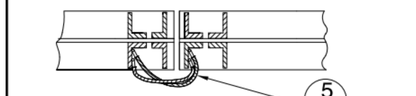

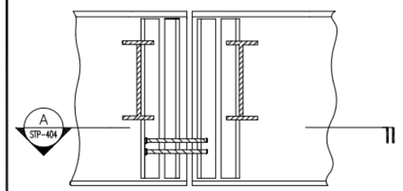

1 STP-404 DETAIL OF INSIDE OR OUTSIDE TRACK STRINGER

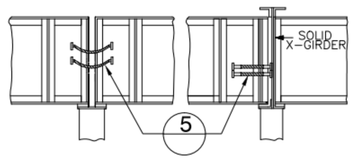

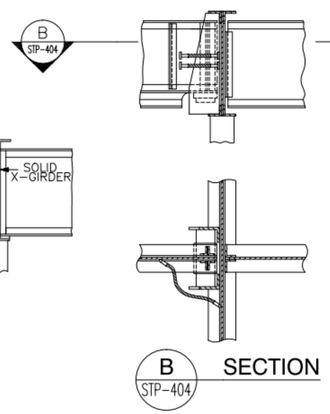

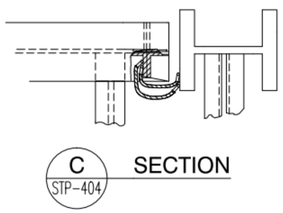

2 STP-404 DETAIL OF TYPICAL SINGLE EXPANSION BENTS

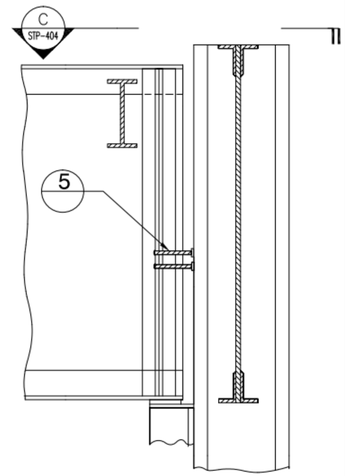

3 STP-404 DETAIL OF OUTSIDE BRIDGE STRINGER

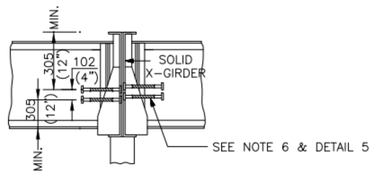

4 STP-404 DETAIL OF TYPICAL DOUBLE EXPANSION BENT

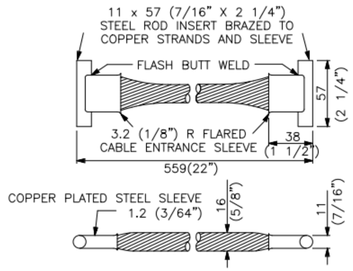

MATERIAL: 300KCMIL COPPER ROPELAY CABLE – 37/7 259 STRANDS, EACH ø 0.87 (0.0341")

5 STP-404 DETAIL OF NEGATIVE RETURN CIRCUIT BOND

(MINIMUM 2 BONDS PER LOCATION)

NOTES:

1. ALL BONDS MUST BE INSTALLED WITHIN 1829 (6'–0") OF CROSS GIRDER.
2. REMOVE ALL LOOSE RUST FROM RAIL AND REMOVE PAINT AND RUST FROM STRUCTURE BEFORE WELDING BONDS.
3. PAINT STRUCTURE AT WELD AFTER BONDS ARE INSTALLED.
4. USE 25 x 4.8 x 356 (1" X 3/16" X 14") IRON WELDING ROD PER WELD, WEIGHT OF ROD PER BOND IS 0.068kg. (0.15 LB.)
5. AFTER WELD HAS COOLED, CLEAN STRUCTURE AND WELD WITH WIRE BRUSH, ALSO APPLY FIELD PRIMER. WHEN DRY, APPLY TOP COAT STRUCTURE PAINT.
6. BONDS MUST NOT BE INSTALLED BELOW POINTS SHOWN TO PERMIT RENEWAL OF WORN MEMBERS.
7. THE CONNECTION SHALL BE COVERED WITH A SINGLE HALF–LAPPED LAYER OF SCOTCH 2210 VINYL MASTIC TAPE.
8. ALL DIMENSIONS ARE IN MILLIMETERS UNLESS SHOWN OTHERWISE.

CHICAGO TRANSIT AUTHORITY
ENGINEERING

SENSITIVE SECURITY INFORMATION

WARNING: THIS RECORD CONTAINS SENSITIVE SECURITY INFORMATION THAT IS CONTROLLED UNDER 49 CFR PARTS 15 AND 1520. NO PART OF THIS RECORD MAY BE DISCLOSED TO PERSONS WITHOUT A "NEED TO KNOW" AS DEFINED IN CFR PARTS 15 AND 1520, EXCEPT WITH THE WRITTEN PERMISSION OF THE ADMINISTRATOR OF THE TRANSPORTATION SECURITY ADMINISTRATION OR THE SECRETARY OF TRANSPORTATION. UNAUTHORIZED RELEASE MAY RESULT IN CIVIL PENALTY OR OTHER ACTION. FOR U.S. GOVERNMENT AGENCIES, PUBLIC DISCLOSURE IS GOVERNED BY 5 U.S.C. 552 AND 49 CFR PARTS 15 AND 1520.

DRAWING SCALE IS NOT GUARANTEED.
CTA ASSUMES NO RISK OF LIABILITY FOR ERRORS CAUSED, DIRECTLY OR INDIRECTLY, BY SCALING OF THIS DRAWING.

STANDARD TRACTION POWER
DRAWINGS

IN CHARGE	S. MATHEW
APPROVED BY	J. HARPER
CHECKED BY	M. PEREZ / R. JAMES
DESIGNED BY	CTA
DRAWN BY	CTA
PROJECT NO	
FILE NAME	

MARK	DATE	DESCRIPTION
	12–DEC–18	ISSUED FOR EXECUTION
02	20–APR–18	FINAL RFP
01	01 AUG 2013	CAD FORMATTED
00	01 MAR 2013	NEW STANDARD

LOCATION IDENTIFIER:

STRUCTURE TO STRUCTURE BONDING DETAILS

STP - 404

DESIGN BY:									
DRAWN BY:									
CHECKED BY:									
APPROVED BY:		4	7/3/2023	ISSUED FOR BID	BJ	EM	SM		
CDOT/APPROVED BY:		NO.	DATE	REVISIONS	DES.	DRW.	CHK.	DCCO	CDOT

TRANSYSTEMS
222 SOUTH RIVERSIDE PLAZA SUITE 610
CHICAGO, ILLINOIS 60606

SKIDMORE, OWINGS & MERRILL LLP
224 SOUTH MICHIGAN AVENUE, SUITE 1000
CHICAGO, ILLINOIS 60604

FACET ENGINEERING
4316 NORTH ELSTON AVENUE
CHICAGO, ILLINOIS 60641

CHICAGO DEPARTMENT OF TRANSPORTATION
DIVISION OF ENGINEERING

STATE / LAKE LOOP ELEVATED STATION
200 NORTH STATE STREET, CHICAGO, IL 60601

TRACTION POWER - STP-404 STRUCTURE TO STRUCTURE BONDING DETAILS

CDOT PROJECT D-1-209 | DATE: 9/9/2022

SPEC. NO.

DRAWING NO. ET-513

REVISION NO.

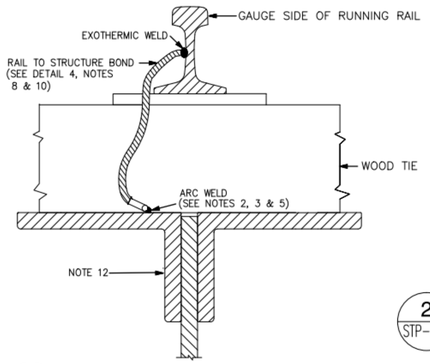

1 STP-405 **DETAIL OF RAIL TO STRUCTURE BOND CONNECTION**

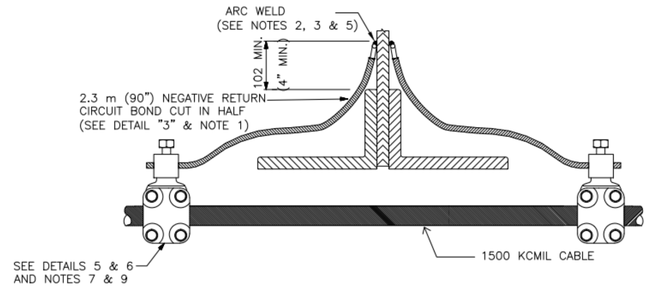

2 STP-405 **DETAIL OF NEGATIVE CABLE TO STRUCTURE BOND CONNECTION**

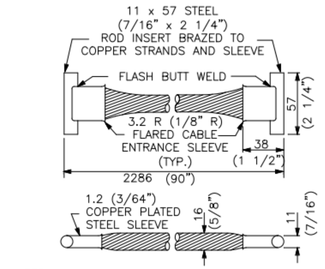

MATERIAL: 300KCMIL COPPER CLASS G ROPELAY CABLE – 37/7 259 STRANDS, EACH ø 0.87 (0.0341")

3 STP-405 **DETAIL OF NEGATIVE RETURN CIRCUIT BOND**

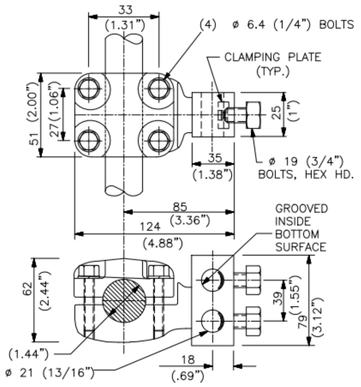

5 STP-405 **DETAIL OF MXTS 1500-350 CONNECTOR**

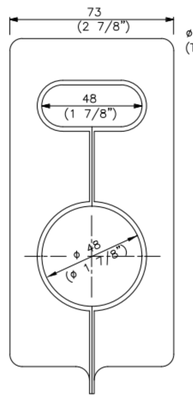

A STP-405 **SECTION**

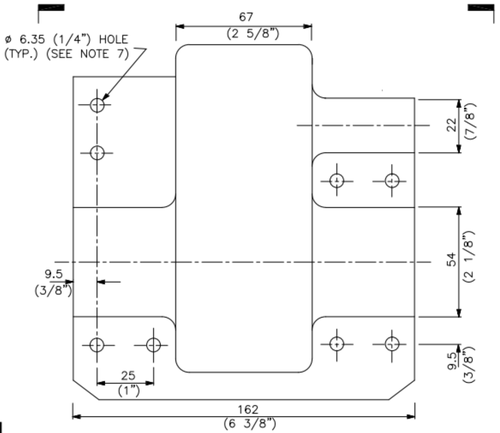

6 STP-405 **DETAIL OF RUBBER MOLDING COVER**

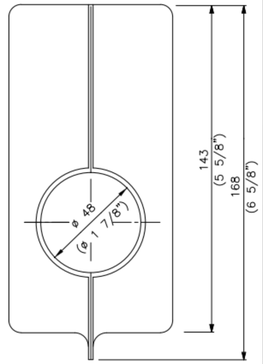

B STP-405 **SECTION**

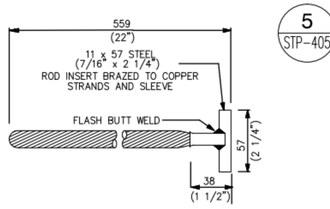

4 STP-405 **DETAIL OF RAIL TO STRUCTURE BOND**

MATERIAL: 300KCMIL COPPER CLASS G ROPELAY CABLE – 37/7 259 STRANDS, EACH ø 0.87 (0.0341")

NOTES:

1. INSTALL TWO 1143 (45") BONDS FROM CABLE TO OUTSIDE STRINGERS INSIDE OF TRACKS INSTALL TWO 1143 (45") BONDS FROM CABLE FROM EACH SIDE OF INSIDE STRINGERS.
2. REMOVE ALL LOOSE RUST FROM RAIL AND REMOVE PAINT AND RUST FROM STRUCTURE BEFORE WELDING BONDS.
3. PAINT STRUCTURE AT WELD AFTER BONDS ARE INSTALLED.
4. USE 25.4 x 4.8 x 356 (1" x 3/16" x 14") IRON WELDING ROD PER WELD. WEIGHT OF ROD PER BOND IS .068 kg (0.15 lb).
5. AFTER WELD HAS COOLED , CLEAN STRUCTURE AND WELD WITH WIRE BRUSH, ALSO APPLY FIELD PRIMER. WHEN DRY, APPLY TOP COAT STRUCTURE PAINT.
6. BONDS MUST NOT BE INSTALLED BELOW POINTS SHOWN TO PERMIT RENEWAL OF WORN MEMBERS.
7. THE CONNECTION SHALL BE COVERED BY BLACK UV PROTECTED RUBBER MOLDING. FASTEN MOLDING BY PLASTIC TREE RIVETS (RATCHET FASTENERS).
8. INSTALL ONE BOND PER 11.9 m (39') OF NEGATIVE RAIL, 305 (1'–0") FROM THE SPLICE PLATE END). INSTALL TWO (2) BONDS BETWEEN ISOLATION JOINTS.
9. MXTS 1500–350 CONNECTORS MADE PER COPPER DEVELOPMENT ASSOCIATION (CDA) SPECIFICATION (UNS. NO. C83300).
10. FOR NON–SIGNALED ELEVATED YARD TRACKS INSTALL BONDS AS SHOWN FOR BOTH RUNNING RAILS ON EACH TRACK AT AN INTERVAL NOT TO EXCEED 91.44 m (300').
11. ALL DIMENSIONS ARE IN MILLIMETERS UNLESS SHOWN OTHERWISE.
12. ATTACH RAIL TO STRUCTURE BOND TO TOP OF BENT GIRDER. ATTACH TO TRACK STRINGER IF BENT GIRDER NOT AVAILABLE.

CHICAGO TRANSIT AUTHORITY
ENGINEERING

SENSITIVE SECURITY INFORMATION

WARNING: THIS RECORD CONTAINS SENSITIVE SECURITY INFORMATION THAT IS CONTROLLED UNDER 49 CFR PARTS 15 AND 1520. NO PART OF THIS RECORD MAY BE DISCLOSED TO PERSONS WITHOUT A "NEED TO KNOW" AS DEFINED IN CFR PARTS 15 AND 1520, EXCEPT WITH THE WRITTEN PERMISSION OF THE ADMINISTRATOR OF THE TRANSPORTATION SECURITY ADMINISTRATION OR THE SECRETARY OF TRANSPORTATION. UNAUTHORIZED RELEASE MAY RESULT IN CIVIL PENALTY OR OTHER ACTION. FOR U.S. GOVERNMENT AGENCIES, PUBLIC DISCLOSURE IS GOVERNED BY 5 U.S.C. 552 AND 49 CFR PARTS 15 AND 1520.

DRAWING SCALE IS NOT GUARANTEED.
CTA ASSUMES NO RISK OF LIABILITY FOR ERRORS CAUSED, DIRECTLY OR INDIRECTLY, BY SCALING OF THIS DRAWING.

STANDARD TRACTION POWER DRAWINGS

IN CHARGE	S. MATHEW
APPROVED BY	J. HARPER
CHECKED BY	M. PEREZ / R. JAMES
DESIGNED BY	CTA
DRAWN BY	CTA
PROJECT NO	
FILE NAME	

MARK	DATE	DESCRIPTION
	12–DEC–18	ISSUED FOR EXECUTION
04	20–APR–18	FINAL RFP
03	01 AUG 2015	CORRECTED DETAIL 3 TITLE
02	12 MAR 2014	REV. DETAILS 1,4, AND NOTES 8,12
01	01 AUG 2013	CAD FORMATTED
00	01 MAR 2013	NEW STANDARD

LOCATION IDENTIFIER:

RAIL AND CABLE BONDING TO STRUCTURE

STP - 405

DESIGN BY:									
DRAWN BY:									
CHECKED BY:									
APPROVED BY:		4	7/3/2023	ISSUED FOR BID	BJ	SRM	SM		
CDOT/APPROVED BY:		NO.	DATE	REVISIONS	DES.	DRW.	CHK.	DCCO	CDOT

TRANSYSTEMS
222 SOUTH RIVERSIDE PLAZA SUITE 610
CHICAGO, ILLINOIS 60606

SKIDMORE, OWINGS & MERRILL LLP
224 SOUTH MICHIGAN AVENUE, SUITE 1000
CHICAGO, ILLINOIS 60604

FACET ENGINEERING
4316 NORTH ELSTON AVENUE
CHICAGO, ILLINOIS 60641

CHICAGO DEPARTMENT OF TRANSPORTATION
DIVISION OF ENGINEERING

STATE / LAKE LOOP ELEVATED STATION
200 NORTH STATE STREET, CHICAGO, IL 60601

TRACTION POWER - STP-405 RAIL AND CABLE BONDING TO STRUCTURE

CDOT PROJECT D-1-209 | DATE: 9/9/2022

SPEC. NO.

DRAWING NO. ET-514

REVISION NO.

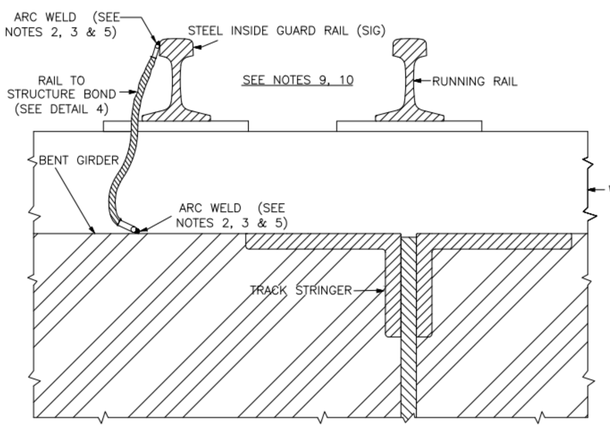

1 STP-406 **DETAIL OF SIG TO STRUCTURE BOND CONNECTION**

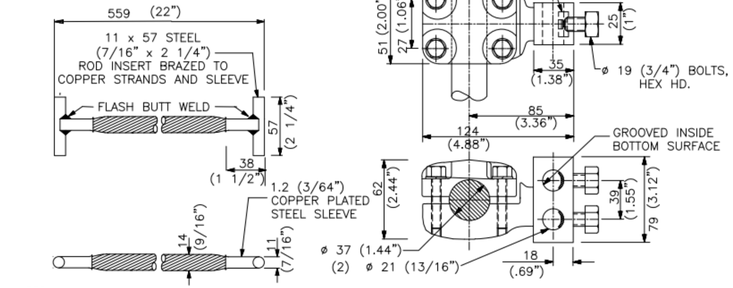

MATERIAL: 300 KCMIL COPPER CLASS G ROPELAY CABLE – 37/7 259 STRANDS, EACH ø 0.79 (0.031")

4 STP-406 **DETAIL OF SIG RAIL TO STRUCTURE BOND**

5 STP-406 **DETAIL OF MXTS 1500-350 CONNECTOR**

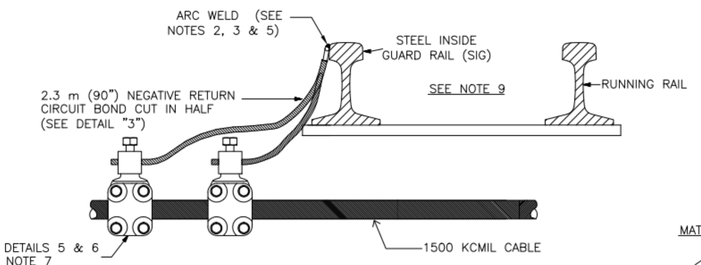

2 STP-406 **DETAIL OF NEGATIVE CABLE TO STEEL INSIDE GUARD (SIG)**

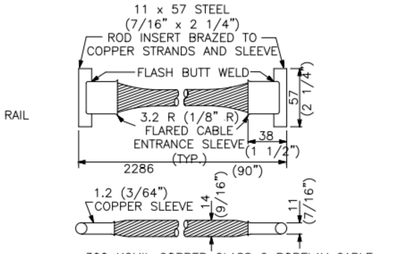

MATERIAL: 300 KCMIL COPPER CLASS G ROPELAY CABLE – 37/7 259 STRANDS, EACH ø 0.79 (0.031")

3 STP-406 **DETAIL OF NEGATIVE RETURN CIRCUIT BOARD**

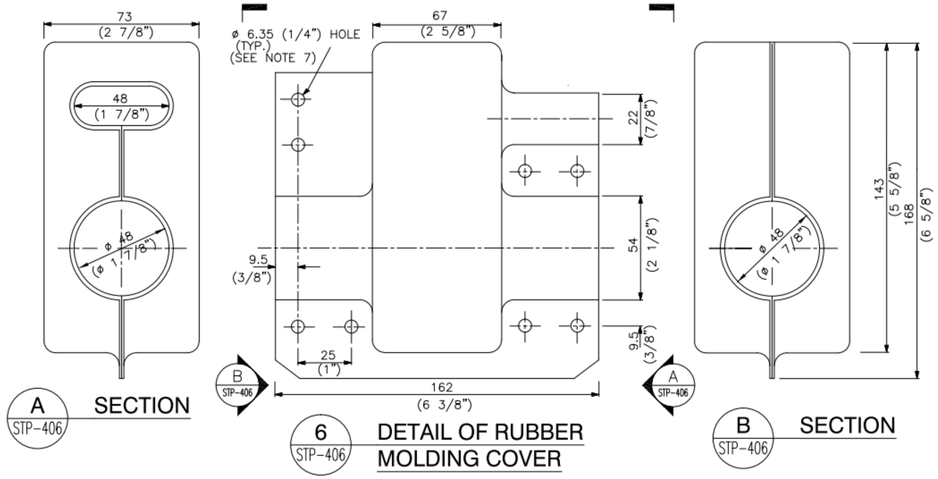

NOTES:

1. THIS DRAWING APPLIES TO STEEL INSIDE GUARD ONLY. SEE STP–405 FOR RUNNING RAIL DETAILS.
2. REMOVE ALL LOOSE RUST FROM RAIL AND REMOVE PAINT AND RUST FROM STRUCTURE BEFORE WELDING BONDS.
3. PAINT STRUCTURE AT WELD AFTER BONDS ARE INSTALLED.
4. USE 25.4 x 4.8 x 356 (1" x 3/16" x 14") IRON WELDING ROD PER WELD. WEIGHT OF ROD PER BOND IS .068 kg (0.15 lb).
5. AFTER WELD HAS COOLED , CLEAN STRUCTURE AND WELD WITH WIRE BRUSH, ALSO APPLY FIELD PRIMER. WHEN DRY, APPLY TOP COAT STRUCTURE PAINT.
6. THE CONNECTION SHALL BE COVERED BY BLACK UV PROTECTED RUBBER MOLDING. FASTEN MOLDING BY PLASTIC TREE RIVETS (RATCHET FASTENERS).
7. MXTS 1500–350 CONNECTORS MADE PER COPPER DEVELOPMENT ASSOCIATION (CDA) SPECIFICATION (UNS. NO. C83300).
8. ALL DIMENSIONS ARE IN MILLIMETERS UNLESS SHOWN OTHERWISE.
9. INSTALL SIG RAIL TO STRUCTURE AND SIG RAIL TO CABLE BONDS AWAY FROM RUNNING RAIL AND TIE PLATES. BOND CABLE MUST NOT TOUCH RUNNING RAIL.
10. INSTALL SIG TO STRUCTURE BONDS EVERY 300' TO NEAREST BENT.

CHICAGO TRANSIT AUTHORITY
ENGINEERING

SENSITIVE SECURITY INFORMATION

WARNING: THIS RECORD CONTAINS SENSITIVE SECURITY INFORMATION THAT IS CONTROLLED UNDER 49 CFR PARTS 15 AND 1520. NO PART OF THIS RECORD MAY BE DISCLOSED TO PERSONS WITHOUT A NEED TO KNOW, AS DEFINED IN 49 CFR PARTS 15 AND 1520, EXCEPT WITH THE WRITTEN PERMISSION OF THE ADMINISTRATOR OF THE TRANSPORTATION SECURITY ADMINISTRATION OR THE SECRETARY OF TRANSPORTATION. UNAUTHORIZED RELEASE MAY RESULT IN CIVIL PENALTY OR OTHER ACTION. FOR U.S. GOVERNMENT AGENCIES, PUBLIC DISCLOSURE IS GOVERNED BY 5 U.S.C. 552 AND 49 CFR PARTS 15 AND 1520.

DRAWING SCALE IS NOT GUARANTEED.
CTA ASSUMES NO RISK OF LIABILITY FOR ERRORS CAUSED, DIRECTLY OR INDIRECTLY, BY SCALING OF THIS DRAWING.

STANDARD TRACTION POWER DRAWINGS

IN CHARGE	S. MATHEW
APPROVED BY	J. HARPER
CHECKED BY	M. PEREZ / R. JAMES
DESIGNED BY	CTA
DRAWN BY	CTA
PROJECT NO	
FILE NAME	

MARK	DATE	DESCRIPTION
	12–DEC–18	ISSUED FOR EXECUTION
02	20–APR–18	FINAL RFP
01	01 AUG 2013	CAD FORMATTED
00	01 MAR 2013	NEW STANDARD

LOCATION IDENTIFIER:

NEGATIVE CABLE BONDING TO STEEL INSIDE GUARD

STP - 406

DESIGN BY:									
DRAWN BY:									
CHECKED BY:									
APPROVED BY:		4	7/3/2023	ISSUED FOR BID	BJ	EM	SM		
CDOT/APPROVED BY:		NO.	DATE	REVISIONS	DES.	DRW.	CHK.	DCCO	CDOT

TRANSYSTEMS
222 SOUTH RIVERSIDE PLAZA SUITE 610
CHICAGO, ILLINOIS 60606

SKIDMORE, OWINGS & MERRILL LLP
224 SOUTH MICHIGAN AVENUE, SUITE 1000
CHICAGO, ILLINOIS 60604

FACET ENGINEERING
4316 NORTH ELSTON AVENUE
CHICAGO, ILLINOIS 60641

CHICAGO DEPARTMENT OF TRANSPORTATION
DIVISION OF ENGINEERING

STATE / LAKE LOOP ELEVATED STATION
200 NORTH STATE STREET, CHICAGO, IL 60601

TRACTION POWER - STP-406 NEGATIVE CABLE BONDING TO STEEL INSIDE GUARD

CDOT PROJECT D-1-209 | DATE: 9/9/2022

SPEC. NO.

DRAWING NO. ET-515

REVISION NO.

M:\PROJECTS\CTA-STP\STP-DWGS\PSTP-193.DWG

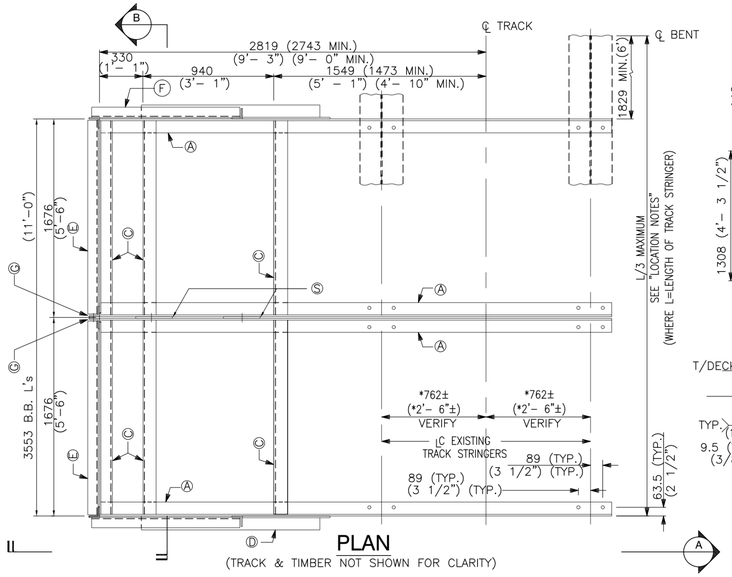

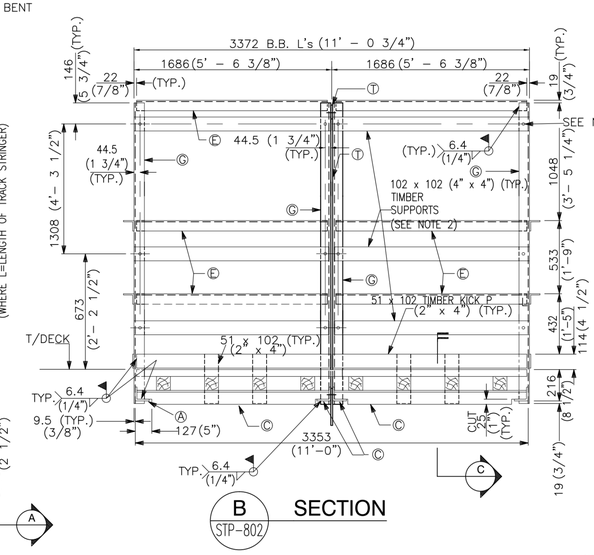

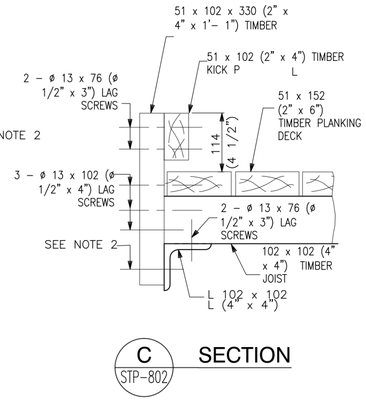

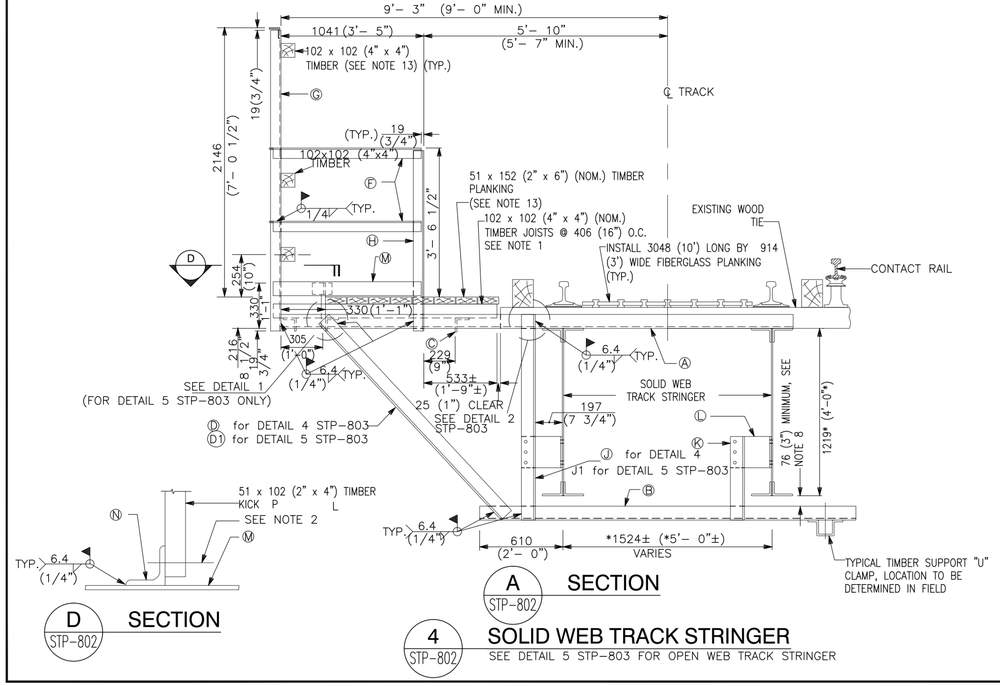

NOTES:

1. SEE STP–803 FOR ALL THE NOTES

LOCATION NOTE:

DO NOT POSITION FRAME WITHIN THE MIDDLE THIRD OF A TRACK STRINGER SPAN OR STRADDLE AN EXPANSION BENT.

ONE TRACK INSTALLATION

BILL OF MATERIAL FOR STRUCTURAL STEEL

ITEM	No.	SHAPE	LENGTH	NOTES
A	4	L 102x102x13 L(4"x4"x1/2")	3734* (12'– 3")*	
B	3	L 102x102x13 L(4"x4"x1/2")	2743* (9'– 0")*	
C	6	L 102x102x13 L(4"x4"x1/2")	1646 (5'–4 13/16")	
D	2	L 102x102x13 L(4"x4"x1/2")	1956* (6'– 5")*	
D1	1	L 102x102x13 L(4"x4"x1/2")	1880* (6'– 2")*	
E	6	L 76x76x9.5 L(3"x3"x3/8")	1637 (5'–4 7/16")	
F	4	L 76x76x9.5 L(3"x3"x3/8")	1080 (3'– 6 1/2")	
G	4	L 76x76x9.5 L(3"x3"x3/8")	2362 (7'– 9")	
H	2	L 76x76x9.5 L(3"x3"x3/8")	1295 (4'– 3")	
J	2	L 102x102x13 L(4"x4"x1/2")	1499* (4'– 11")*	
J1	1	L 102x102x13 L(4"x4"x1/2")	1372* (4'– 6")*	
K	3	L 102x102x13 L(4"x4"x1/2")	610* (2'– 0")*	SEE NOTE 9
L	3	WT 305x699 WT (12"x27.5")	229 (0'– 9")	SEE NOTE 9
M	2	BAR 102x9.5 BAR (4"x3/8"	1067 (3'– 6")	KICK PLATE
N	2	L 76x76x9.5 L(3"x3"x3/8")	89 (0'– 3 1/2")	
P	2	L 102x102x13 L(4"x4"x1/2")	2184* (7'– 2")*	
P1	1	L 102x102x13 L(4"x4"x1/2")	2057* (6'– 9")*	
R	2	L 102x102x13 L(4"x4"x1/2")	1930* (6'– 4")*	
R1	1	L 102x102x13 L(4"x4"x1/2")	1778* (5'– 10")*	
S	2	PLATE 9.5x229 PLATE (3/8"x9")	229 (0'– 9")	GUSSET PLATE
T	2	PLATE 9.5x76 PLATE (3/8"x3")	76 (0'– 3")	GUSSET PLATE

* INDICATES DIMENSIONS TO BE VERIFIED, MAY VARY CONSIDERABLY

CHICAGO TRANSIT AUTHORITY
ENGINEERING

SENSITIVE SECURITY INFORMATION

WARNING: THIS RECORD CONTAINS SENSITIVE SECURITY INFORMATION THAT IS CONTROLLED UNDER 49 CFR PARTS 15 AND 1520. NO PART OF THIS RECORD MAY BE DISCLOSED TO PERSONS WITHOUT A "NEED TO KNOW" AS DEFINED IN CFR PARTS 15 AND 1520, EXCEPT WITH THE WRITTEN PERMISSION OF THE ADMINISTRATOR OF THE TRANSPORTATION SECURITY ADMINISTRATION OR THE SECRETARY OF TRANSPORTATION. UNAUTHORIZED RELEASE MAY RESULT IN CIVIL PENALTY OR OTHER ACTION. FOR U.S. GOVERNMENT AGENCIES, PUBLIC DISCLOSURE IS GOVERNED BY 5 U.S.C. 552 AND 49 CFR PARTS 15 AND 1520.

DRAWING SCALE IS NOT GUARANTEED. CTA ASSUMES NO RISK OF LIABILITY FOR ERRORS CAUSED, DIRECTLY OR INDIRECTLY, BY SCALING OF THIS DRAWING.

STANDARD TRACTION POWER DRAWINGS

IN CHARGE	S. MATHEW
APPROVED BY	J. HARPER
CHECKED BY	M. PEREZ / R. JAMES
DESIGNED BY	CTA
DRAWN BY	CTA
PROJECT NO	
FILE NAME	

MARK	DATE	DESCRIPTION
01	01 AUG 2013	CAD FORMATTED
00	01 MAR 2013	NEW STANDARD

LOCATION IDENTIFIER:

ELEVATED TRACK SWITCH PLATFORM FOR TWO ENCLOSURES (SHEET 1)

STP - 802

DESIGN BY:									
DRAWN BY:									
CHECKED BY:									
APPROVED BY:		4	7/3/2023	ISSUED FOR BID	BJ	EM	SM		
CDOT/APPROVED BY:		NO.	DATE	REVISIONS	DES.	DRW.	CHK.	DCCO	CDOT

TRANSYSTEMS
222 SOUTH RIVERSIDE PLAZA SUITE 610
CHICAGO, ILLINOIS 60606

SKIDMORE, OWINGS & MERRILL LLP
224 SOUTH MICHIGAN AVENUE, SUITE 1000
CHICAGO, ILLINOIS 60604

FACET ENGINEERING
4316 NORTH ELSTON AVENUE
CHICAGO, ILLINOIS 60641

CHICAGO DEPARTMENT OF TRANSPORTATION
DIVISION OF ENGINEERING

STATE / LAKE LOOP ELEVATED STATION
200 NORTH STATE STREET, CHICAGO, IL 60601

TRACTION POWER - STP-802 SWITCH PLATFORM DETAILS

CDOT PROJECT D-1-209 | DATE: 9/9/2022

SPEC. NO.

DRAWING NO. ET-516

REVISION NO.

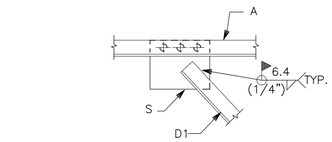

1 STP-803 **DETAIL**
(FOR DETAIL 5 ONLY)

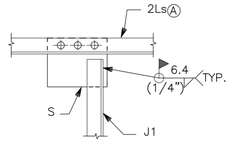

2 STP-803 **DETAIL**

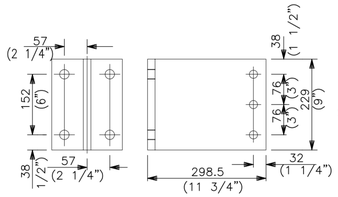

3 STP-803 **TEE BRACKET DETAIL** Ⓛ
(CUT FROM W24X55)

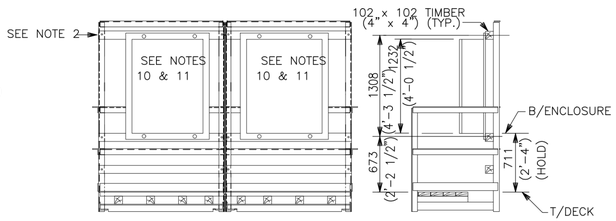

4 STP-803 **SWITCH ENCLOSURE TIMBER SUPPORT INSTALLATION DETAIL**

ONE TRACK INSTALLATION

BILL OF MATERIAL FOR STRUCTURAL STEEL

ITEM	No.	SHAPE		LENGTH	NOTES
A	4	L 102x102x13	L(4"x4"x1/2")	3734* (12'– 3")*	
B	3	L 102x102x13	L(4"x4"x1/2")	2743* (9'– 0")*	
C	6	L 102x102x13	L(4"x4"x1/2")	1646 (5'–4 13/16")	
D	2	L 102x102x13	L(4"x4"x1/2")	1956* (6'– 5")*	
D1	1	L 102x102x13	L(4"x4"x1/2")	1880* (6'– 2")*	
E	6	L 76x76x9.5	L(3"x3"x3/8")	1637 (5'–4 7/16")	
F	4	L 76x76x9.5	L(3"x3"x3/8")	1080 (3'– 6 1/2")	
G	4	L 76x76x9.5	L(3"x3"x3/8")	2362 (7'– 9")	
H	2	L 76x76x9.5	L(3"x3"x3/8")	1295 (4'– 3")	
J	2	L 102x102x13	L(4"x4"x1/2")	1499* (4'– 11")*	
J1	1	L 102x102x13	L(4"x4"x1/2")	1372* (4'– 6")*	
K	3	L 102x102x13	L(4"x4"x1/2")	610* (2'– 0")*	SEE NOTE 9
L	3	WT 305x699	WT (12"x27.5")	229 (0'– 9")	SEE NOTE 9
M	2	BAR 102x9.5	BAR (4"x3/8")	1067 (3'– 6")	KICK PLATE
N	2	L 76x76x9.5	L(3"x3"x3/8")	89 (0'– 3 1/2")	
P	2	L 102x102x13	L(4"x4"x1/2")	2184* (7'– 2")*	
P1	1	L 102x102x13	L(4"x4"x1/2")	2057* (6'– 9")*	
R	2	L 102x102x13	L(4"x4"x1/2")	1930* (6'– 4")*	
R1	1	L 102x102x13	L(4"x4"x1/2")	1778* (5'– 10")*	
S	2	PLATE 9.5x229	PLATE (3/8"x9")	229 (0'– 9")	GUSSET PLATE
T	2	PLATE 9.5x76	PLATE (3/8"x3")	76 (0'– 3")	GUSSET PLATE

* INDICATES DIMENSIONS TO BE VERIFIED, MAY VARY CONSIDERABLY

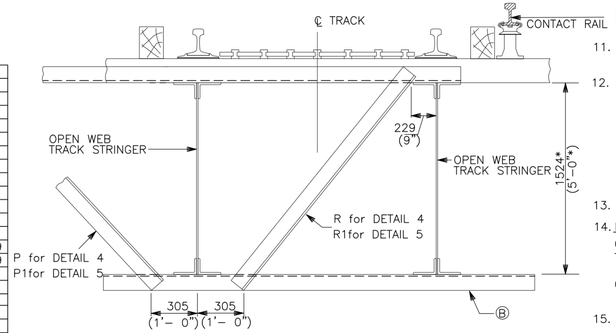

5 STP-803 **OPEN WEB TRACK STRINGER**
(FOR REMAINING INFORMATION SEE SOLID WEB TRACK STRINGER, STP–802)

LOCATION NOTE:

DO NOT POSITION FRAME WITHIN THE MIDDLE THIRD OF A TRACK STRINGER SPAN OR STRADDLE AN EXPANSION BENT.

NOTES:

1. BOLT TIMBER JOISTS TO ANGLES ONLY. USE ø 9.5 (3/8") HOT DIP GALVANIZED CARRIAGE BOLTS WITH HEAVY HEX LOCK NUTS. COUNTERBORE 25 (1") DEEP. BACK FILL COUNTER BORE WITH "DUCT SEAL" OR EQUAL.
2. THROUGH BOLT TIMBER SUPPORTS TO ANGLE FRAME USING ø 19 (3/4") A307 BOLTS, NUTS AND TWO WASHERS IN ø 21 (13/16") HOLES.
3. ALL HOLES MADE INTO TRAIN CARRYING MEMBERS SHALL BE DRILLED FULL SIZE. BURNING AND REAMING OF HOLES SHALL NOT BE ALLOWED.
4. FASTENERS USED FOR PLATFORM FRAME ASSEMBLY OR STRINGER CONNECTIONS SHALL CONSIST OF HIGH STRENGTH STEEL ø 22 (7/8") BOLTS, WASHERS AND NUTS INSTALLED IN ø 24 (15/16") HOLES UNLESS OTHERWISE NOTED. THESE FASTENERS SHALL CONFORM TO LATEST EDITION ASTM SPECIFICATIONS A325, F436 AND A563 RESPECTIVELY. SEE SPECIFICATIONS FOR METHOD OF FASTENER INSTALLATION.
5. DO NOT WELD SWITCH PLATFORM TO STRUCTURE.
6. ALL FRAME CONNECTIONS SHALL BE SHOP WELDED ALL AROUND WITH 6.4 (1/4") CONTINUOUS FILLET WELDS USING E70 ELECTRODES UNLESS OTHERWISE NOTED.
7. ALL STEEL SHALL BE ASTM A36 STRUCTURAL STEEL.
8. WHEN PREVAILING CONDITIONS REQUIRE: ATTACH ANGLES (B) DIRECTLY TO BOTTOM FLANGE OF TRACK STRINGER WITH HIGH STRENGTH BOLTS. ALSO ELIMINATE SUPPORT TEE BRACKET (L) AND ANGLES (J) AND (K). OBTAIN APPROVAL FROM CTA PRIOR TO COMMENCEMENT OF THIS WORK.
9. PROVIDE ONE ADDITIONAL PIECE OF (K) AND (L) FOR EACH TRACK CROSSED. EXTEND PIECE (B) AS REQUIRED.
10. MOUNTING OF TIMBER SUPPORTS SHOWN ARE FOR TYPICAL SWITCH BOX INSTALLATION. ANY DEVIATION IN SWITCH BOX DIMENSION WILL REQUIRE MODIFICATIONS OF THE PLATFORM FRAMING AND LOCATION OF THE TIMBER SUPPORTS.
11. MOUNTING BOLTS FOR ENCLOSURE SHALL BE ø 13 (1/2") STAINLESS STEEL CONFORMING TO ASTM A193. SQUARE PLATE WASHERS, LOCK WASHERS AND NUTS SHALL BE STAINLESS STEEL.
12. ALL NEW MISCELLANEOUS STEEL SHALL RECEIVE THE FOLLOWING:
    A. ONE (1) SHOP COAT AND ONE (1) FIELD COAT OF 2–PART ALUMINUM PIGMENTED EPOXY MASTIC, 5 MIL DFT PER COAT.
    B. ONE (1) FIELD FINISH COAT OF ALIPHATIC ACRYLIC URETHANE, 1.5 MILS DFT. COLOR TO MATCH THAT OF EXISTING TRACK STRINGER.
    C. SHOP AND FIELD CONTACT SURFACES, OR SURFACES WITHIN 51 (2") OF FIELD WELDS, SHALL NOT BE PAINTED IN THE SHOP.
    D. ALL PAINTS USED SHALL BE PRODUCTS OF THE SAME MANUFACTURER, AND SHALL BE APPLIED IN ACCORDANCE WITH PAINT MANUFACTURER'S PUBLISHED INSTRUCTIONS AND RECOMMENDATIONS.
13. ALL TIMBER SHALL BE TREATED WITH AWPA TYPE P1(89) FOR CREO–PINE.
14. HAZARDOUS WORKING CONDITIONS:
    CAUTION ALL EMPLOYEES OF THE PRESENCE OF CONTACT RAIL (600 VOLTS DC) AND MOVING TRAINS ON THE CTA TRACKS. TAKE ALL NECESSARY PRECAUTIONS TO PREVENT DAMAGE TO LIFE OR PROPERTY THROUGH CONTACT WITH THE ELECTRICAL OR OPERATION SYSTEMS. ANY CONTACT WITH LIVE CONTACT RAIL OR "LIVE" PORTIONS OF TRAIN UNDER–CARRIAGE MAY RESULT IN A SEVERE BURN OR DEATH.
15. ALL DIMENSIONS ARE IN MILLIMETERS UNLESS SHOWN OTHERWISE.

CHICAGO TRANSIT AUTHORITY
ENGINEERING

SENSITIVE SECURITY INFORMATION

WARNING: THIS RECORD CONTAINS SENSITIVE SECURITY INFORMATION THAT IS CONTROLLED UNDER 49 CFR PARTS 15 AND 1520. NO PART OF THIS RECORD MAY BE DISCLOSED TO PERSONS WITHOUT A "NEED TO KNOW" AS DEFINED IN CFR PARTS 15 AND 1520, EXCEPT WITH WRITTEN PERMISSION OF THE SECRETARY OF TRANSPORTATION SECURITY ADMINISTRATION OR THE SECRETARY OF TRANSPORTATION. UNAUTHORIZED RELEASE MAY RESULT IN CIVIL PENALTY OR OTHER ACTION. FOR U.S. GOVERNMENT AGENCIES, PUBLIC DISCLOSURE IS GOVERNED BY 5 U.S.C. 552 AND 49 CFR PARTS 15 AND 1520.

DRAWING SCALE IS NOT GUARANTEED. CTA ASSUMES NO RISK OF LIABILITY FOR ERRORS CAUSED, DIRECTLY OR INDIRECTLY, BY SCALING OF THIS DRAWING.

STANDARD TRACTION POWER DRAWINGS

IN CHARGE	S. MATHEW
APPROVED BY	J. HARPER
CHECKED BY	M. PEREZ / R. JAMES
DESIGNED BY	CTA
DRAWN BY	CTA
PROJECT NO	
FILE NAME	

MARK	DATE	DESCRIPTION
01	01 AUG 2013	CAD FORMATTED
00	01 MAR 2013	NEW STANDARD

LOCATION IDENTIFIER:

ELEVATED TRACK
SWITCH PLATFORM FOR
2 ENCLOSURES (SHEET 2)

STP - 803

DESIGN BY:										
DRAWN BY:										
CHECKED BY:										
APPROVED BY:		4	7/3/2023	ISSUED FOR BID	BJ	EM	SM			
CDOT/APPROVED BY:		NO.	DATE	REVISIONS	DES.	DRW.	CHK.	DCCO	CDOT	

TRANSYSTEMS
222 SOUTH RIVERSIDE PLAZA SUITE 610
CHICAGO, ILLINOIS 60606

SKIDMORE, OWINGS & MERRILL LLP
224 SOUTH MICHIGAN AVENUE, SUITE 1000
CHICAGO, ILLINOIS 60604

FACET ENGINEERING
4316 NORTH ELSTON AVENUE
CHICAGO, ILLINOIS 60641

CHICAGO DEPARTMENT OF TRANSPORTATION
DIVISION OF ENGINEERING

STATE / LAKE LOOP ELEVATED STATION
200 NORTH STATE STREET, CHICAGO, IL 60601

TRACTION POWER - STP-803 SWITCH PLATFORM DETAILS

CDOT PROJECT D-1-209 | DATE: 9/9/2022

SPEC. NO.

DRAWING NO. ET-517

REVISION NO.

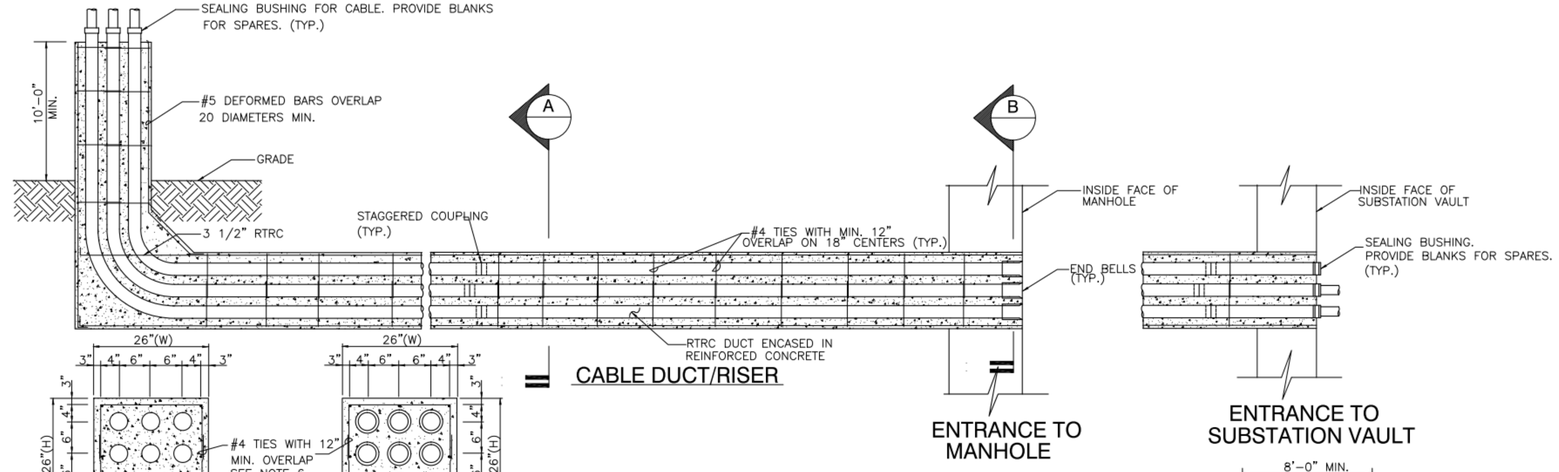

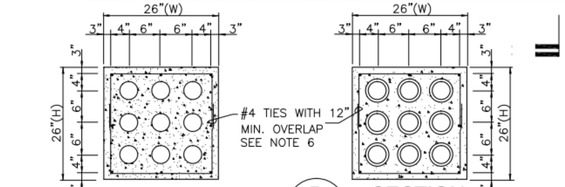

A STP-902 SECTION
RTRC CONDUIT ENCASED IN REINFORCED CONCRETE IN OPEN RUN, 3 1/2" DUCT I.D. (SHOWN FOR 3X3 DUCT)

B STP-902 SECTION
RTRC CONDUIT WITH END BELLS ENCASED IN REINFORCED CONCRETE AT MANHOLE WINDOW 3 1/2" DUCT I.D. (SHOWN FOR 3X3 DUCT)

WIDTH OR HEIGHT FOR VARIOUS DUCT ARRANGEMENTS		
NO. OF DUCT HOLES IN ONE LINE HORIZ. OR VERT.	RTRC CONDUIT DUCT REINFORCED CONCRETE ENCASED 3 1/2" I.D.	
	OPEN RUN	MANHOLE WINDOW
1	14"	20"
2	20"	26"
3	26"	32"
4	32"	38"
5	38"	44"
6	44"	50"
7	50"	56"
8	56"	62"

NOTES:

1. ALL DUCT ENTRANCES TO HAVE 2" BEVEL.
2. ONE RTRC LADDER FOR EACH MANHOLE ENTRANCE TO BE FULL HEIGHT, PERMANENTLY INSTALLED.
3. SLOPE FLOOR TO SUMP.
4. MANHOLES SHALL HAVE SUFFICIENT CONCRETE REINFORCEMENT TO WITHSTAND ALL ANTICIPATED WALL PRESSURES AFTER INSTALLATION. THE CONTRACTOR SHALL BE RESPONSIBLE FOR THE DESIGN AND CONSTRUCTION OF ALL MANHOLES. THE THICKNESS OF ALL CONCRETE SECTIONS AS SHOWN ARE SCHEMATIC AND THE CONTRACTOR SHALL MAINTAIN THE CLEAR INTERIOR DIMENSIONS AS SHOWN. THE CONTRACTOR SHALL ALSO BE RESPONSIBLE TO DETERMINE THE WINDOW DIMENSIONS (HEIGHT AND WIDTH) FOR DUCTBANK ENTRANCES TO THE MANHOLES AND SUBSTATIONS.
5. MANHOLE CONFIGURATION SHALL BE DESIGNED TO FIT PROJECT CONDITIONS.
6. STAGGER TOP AND BOTTOM TRANSVERSE TIES TWO INCHES APART. TOP TIES MUST NOT TOUCH BOTTOM TIES.

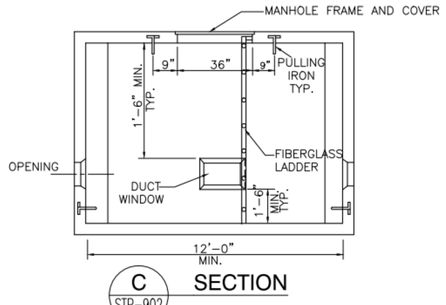

C STP-902 SECTION

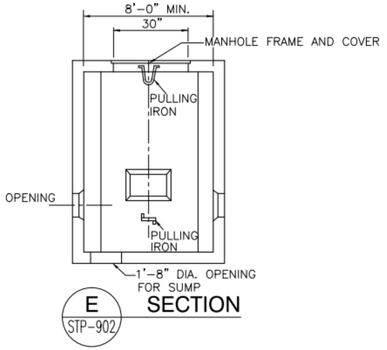

E STP-902 SECTION

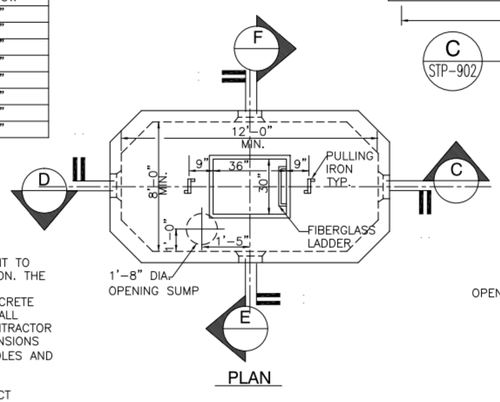

PLAN

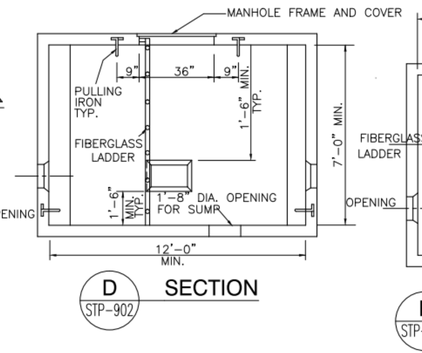

D STP-902 SECTION

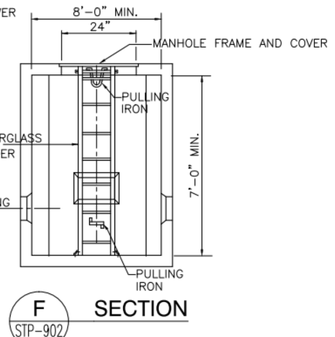

F STP-902 SECTION

CHICAGO TRANSIT AUTHORITY
ENGINEERING

SENSITIVE SECURITY INFORMATION

WARNING: THIS RECORD CONTAINS SENSITIVE SECURITY INFORMATION THAT IS CONTROLLED UNDER 49 CFR PARTS 15 AND 1520. NO PART OF THIS RECORD MAY BE DISCLOSED TO PERSONS WITHOUT A "NEED TO KNOW" AS DEFINED IN CFR PARTS 15 AND 1520, EXCEPT WITH THE WRITTEN PERMISSION OF THE ADMINISTRATOR OF THE TRANSPORTATION SECURITY ADMINISTRATION OR THE SECRETARY OF TRANSPORTATION. UNAUTHORIZED RELEASE MAY RESULT IN CIVIL PENALTY OR OTHER ACTION. FOR U.S. GOVERNMENT AGENCIES, PUBLIC DISCLOSURE IS GOVERNED BY 5 U.S.C. 552 AND 49 CFR PARTS 15 AND 1520.

DRAWING SCALE IS NOT GUARANTEED. CTA ASSUMES NO RISK OF LIABILITY FOR ERRORS CAUSED, DIRECTLY OR INDIRECTLY, BY SCALING OF THIS DRAWING.

STANDARD TRACTION POWER
DRAWINGS

IN CHARGE	S. MATHEW
APPROVED BY	J. HARPER
CHECKED BY	M. PEREZ / R. JAMES
DESIGNED BY	CTA
DRAWN BY	CTA
PROJECT NO	
FILE NAME	

MARK	DATE	DESCRIPTION
	12-DEC-18	ISSUED FOR EXECUTION
03	20-APR-18	FINAL RFP
02	01 AUG 2015	ADDED NOTE 6
01	01 AUG 2013	CAD FORMATTED
00	01 MAR 2013	NEW STANDARD

LOCATION IDENTIFIER:

TYPICAL CABLE DUCT/RISER AND MANHOLE DETAILS

STP - 902

DESIGN BY:										
DRAWN BY:										
CHECKED BY:										
APPROVED BY:		4	7/3/2023	ISSUED FOR BID	BJ	SRM	SM			
CDOT/APPROVED BY:		NO.	DATE	REVISIONS	DES.	DRW.	CHK.	DCCO	CDOT	

TRANSYSTEMS
222 SOUTH RIVERSIDE PLAZA SUITE 610
CHICAGO, ILLINOIS 60606

SKIDMORE, OWINGS & MERRILL LLP
224 SOUTH MICHIGAN AVENUE, SUITE 1000
CHICAGO, ILLINOIS 60604

FACET ENGINEERING
DBE/MBE CERTIFIED
Performance • Respect • Initiation • Dedication • Experience
FACET ENGINEERING
4316 NORTH ELSTON AVENUE
CHICAGO, ILLINOIS 60641

CHICAGO DEPARTMENT OF TRANSPORTATION
DIVISION OF ENGINEERING

STATE / LAKE LOOP ELEVATED STATION
200 NORTH STATE STREET, CHICAGO, IL 60601

TRACTION POWER - STP-902 TYPICAL CABLE DUCT/RISER AND MANHOLE DETAILS

CDOT PROJECT D-1-209 | DATE: 9/9/2022

SPEC. NO.

DRAWING NO. ET-518

REVISION NO.

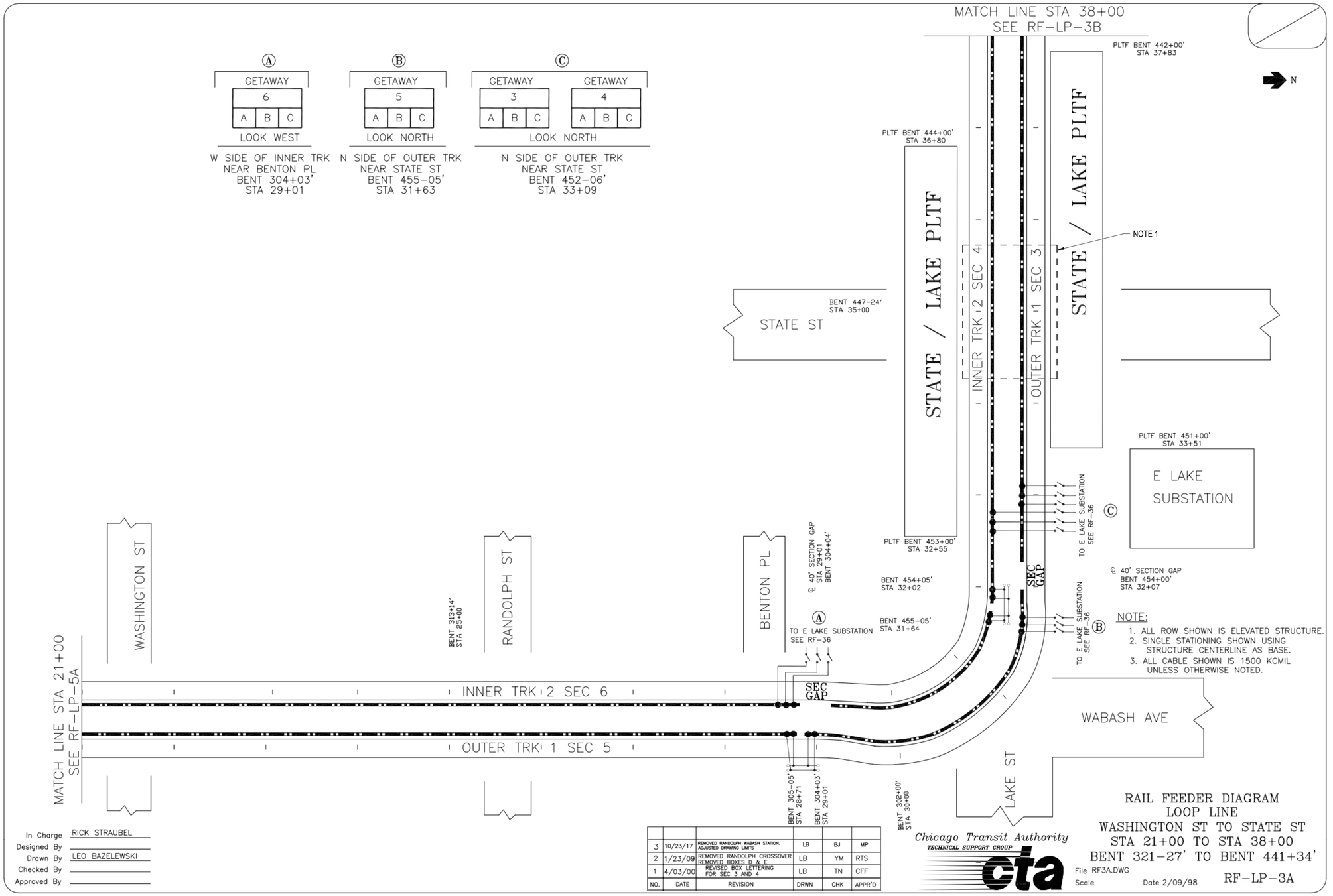

NOTES:

1. EXISTING CONTACT RAIL AND CHAIRS SHALL BE REMOVED AND REINSTALLED ABOVE STATE ST. REFER TO DRAWING CT-101 FOR LIMITS OF TRACK WORK.

NO.	DATE	REVISION	DRWN	CHK	APPR'D
3	10/23/17	REMOVED RANDOLPH WABASH STATION. ADJUSTED DRAWING LIMITS	LB	BJ	MP
2	1/23/09	REMOVED RANDOLPH CROSSOVER REMOVED BOXES D & E	LB	YM	RTS
1	4/03/00	REVISED BOX LETTERING FOR SEC 3 AND 4	LB	TN	CFF

In Charge RICK STRAUBEL
Designed By
Drawn By LEO BAZELEWSKI
Checked By
Approved By

Chicago Transit Authority
TECHNICAL SUPPORT GROUP
cta

RAIL FEEDER DIAGRAM
LOOP LINE
WASHINGTON ST TO STATE ST
STA 21+00 TO STA 38+00
BENT 321-27' TO BENT 441+34'

File RF3A.DWG
Scale
Date 2/09/98

RF-LP-3A

DESIGN BY:									
DRAWN BY:									
CHECKED BY:									
APPROVED BY:		4	7/3/2023	ISSUED FOR BID	BJ	EM	SM		
CDOT/APPROVED BY:		NO.	DATE	REVISIONS	DES.	DRW.	CHK.	DCCO	CDOT

TranSystems
TRANSYSTEMS
222 SOUTH RIVERSIDE PLAZA SUITE 610
CHICAGO, ILLINOIS 60606

SOM
SKIDMORE, OWINGS & MERRILL LLP
224 SOUTH MICHIGAN AVENUE, SUITE 1000
CHICAGO, ILLINOIS 60604

FACET ENGINEERING
DBE/MBE CERTIFIED
Performance • Respect • Initiation • Dedication • Experience
FACET ENGINEERING
4316 NORTH ELSTON AVENUE
CHICAGO, ILLINOIS 60641

CDOT
CHICAGO DEPARTMENT OF TRANSPORTATION
DIVISION OF ENGINEERING

STATE / LAKE LOOP ELEVATED STATION
200 NORTH STATE STREET, CHICAGO, IL 60601

SPEC. NO.

TRACTION POWER - EXISTING RAIL FEEDER DIAGRAM

DRAWING NO.
ET-601

CDOT PROJECT D-1-209

DATE: 9/9/2022

REVISION NO.

ABBREVIATIONS

2W FXO	2 WIRE FOREIGN EXCHANGE OFFICE
2W FXS	2 WIRE FOREIGN EXCHANGE SUBSCRIBER
4W E&M	4 WIRE E&M
A	AMPERE
ADA	AMERICANS WITH DISABILITIES ACT
AH	AMPERE HOUR
AT&T	AMERICAN TELEPHONE & TELEGRAPH
AUX.	AUXILIARY
AWG	AMERICAN WIRE GAUGE
BC	BALANCE CHECKER
BT.	BENT
C.	CONDUIT
C/L	CENTER LINE
CA	CUSTOMER ASSISTANT
CA.	CABLE
CAB.	CABINET
CAM	CCCTV CAMERA
CAS	CUSTOMER ASSISTANCE STATION
CC	CONTROL CENTER
CHBK	CHANNEL BANK
CIRC.	CIRCUIT
CO	CONDUIT ONLY
CTA.	CHICAGO TRANSIT AUTHORITY
CTR	CENTER
CONT.	CONTINUOUS, CONTROLLER
CU.	COPPER
CU PBX	CENTRAL UNIT PBX
DA	DIGITAL ADVERTISING SIGN
DACS	DIGITAL ACCESS AND CROSSCONNECT SWITCH
DAS	DIGITAL ADVERTISING SIGN
DC	DIRECT CURRENT
D.E.	DEAD END
DIA Ø	DIAMETER
DIM.	DIMENSION
DMS	DIGITAL DYNAMIC SIGN
DPP	DATA PATCH PANEL
DSX - 1	DIGITAL SIGNAL CROSSCONNECT PANEL FOR DS - 1 SWITCH
DS -0	DIGITAL SIGNAL RATE 0 (64 Kbps)
DS - 1	DIGITAL SIGNAL RATE 1 (1.544 Mbps)
DWG	DRAWING
EA	EACH
EC	ELEVATOR CONTROLLER
ELEV	ELEVATOR
EOL	END OF LINE
EOR	ENGINEER OF RECORD
EQ	EQUIPMENT
ERTU	ELEVATOR RTU
ESC	ESCALATOR
FDF	FIBER DISTRIBUTION FRAME
FDP	FIBER DISTRIBUTION PANEL
F.F.	FINISHED FLOOR
FID	FIBER OPTIC CABLE IN INNERDUCT
FO	FIBER OPTIC
FOCS	FIBER OPTIC COMMUNICATION SYSTEM
FSE	FIBER SLACK ENCLOSURE
FTG	FITTING
FLR	FLOOR
FXO	FOREIGN EXCHANGE OFFICE
FXS	FOREIGN EXCHANGE SERVICE
GALV	GALVANIZED
GRD	GROUND
GRS	GALVANIZED RIGID STEEL
HDPE	HIGH DENSITY POLYETHYLENE
HPT	HELP POINT TELEPHONE
HTR	HEATER
IB	INBOUND
ICM	INTERCON MASTER CONTROL UNIT
IDF	INTERMEDIATE DISTRIBUTION FRAME
IDS	INTRUSION DETECTION SENSOR
J.B.	JUNCTION BOX
LAN	LOCAL AREA NETWORK
LTG	LIGHTING
MAX.	MAXIMUM
MC	MEDIA CONVERTER
MDF	MAIN DISTRIBUTION FRAME
MFGR	MANUFACTURER
M.H.	MANHOLE
MIC.	MICROPHONE
MON	MONITOR
MTD	MOUNTED
N.B.	NORTH BOUND
NES	NODAL EQUIPMENT SHELTER
N.I.C.	NOT IN CONTRACT
NOM.	NOMINAL
N.T.S.	NOT TO SCALE
NVR	NETWORK VIDEO RECORDER
OB	OUTBOUND
OCU/DP	OFFICE CHANNEL UNIT/DATA PROCESSOR
OC - 48	OPTICAL CARRIER RATE 48 (2.5 Gbps)
P	PRIMARY
PA	PUBLIC ADDRESS
PBX	PRIVATE BRANCH EXCHANGE
PC	PERSONAL COMPUTER
PNL	PANEL
PR	PAIR
PTE	PATCH TO EQUIPMENT
POI	POINT OF INTERFACE
PP	PATCH PANEL
PVC	POLY VINYL CHLORIDE
RASC	READY ACCESS SPLICE CLOSURE (COPPER)
RCV	RECEIVE
RD TEL	RINGDOWN TELEPHONE
RM	ROOM
RPM	REMOTE POWER MANAGEMENT
RTU	REMOTE TERMINAL UNIT
RX	RECEIVER
S	SECONDARY
SA	STORAGE ARRAY
S.B.	SOUTH BOUND
SC	SPLICE CABINET
SCADA	SUPERVISORY CONTROL AND DATA ACQUISITION
SHT. NO.	SHEET NUMBER
SHP	SHOP
SONET	SYNCHRONOUS OPTICAL NETWORK
SS	STAINLESS STEEL
STA.	STATION
STD.	STANDARD
SU PBX	SOUTH UNIT PBX
SVT	SECURITY VIDEO TERMINAL
TB	TERMINAL BLOCK
TEL	TELEPHONE
TIP	TERMINATE IN PANEL
TRANS	TRANSPORTATION
TRK.	TRACK
TSP	TWISTED, SHIELDED PAIR
TTC	TELEPHONE TERMINAL CABINET
TVM	TICKET VENDING MACHINE
TWP	TWISTED WIRE PAIR
TX	TRANSMITTER
TYP.	TYPICAL
UNO	UNLESS NOTED OTHERWISE
UPSR	UNIDIRECTIONAL PATH SWITCHED RING
UPS	UNINTERRUPTIBLE POWER SUPPLY
UTP	UNSHIELDED TWISTED PAIR
V	VOLT
VAC	VOLTS ALTERNATING CURRENT
VC	VIDEO CLIENT
VDC	VOLTS DIRECT CURRENT
VF	VOICE FREQUENCY
VLAN	VIRTUAL LOCAL AREA NETWORK
VMS	VARIABLE MESSAGE SIGN - PA ADA VISUAL SIGN
VOIP	VOICE OVER INTERNET PROTOCOL
W	WATT
W/	WITH
WAP	WIRELESS ACCESS POINT
XMT	TRANSMIT

DEMOLITION ABBREVIATIONS

(D)	EXISTING TO BE DEMOLISHED
(E)	EXISTING TO REMAIN
(EN)	EXISTING AT NEW LOCATION
(ER)	EXISTING TO BE REPLACED
(M)	EXISTING TO BE MOVED

SYMBOLS

- S — WALL-MOUNTED SPEAKER
- S # — CEILING-MOUNTED SPEAKER; # = SPEAKER TYPE
- CEILING-MOUNTED TELEPHONE PAGING SPEAKER
- RTU — DATA TRANSMISSION SYSTEM REMOTE TERMINAL UNIT
- J OR J — JUNCTION BOX
- EXPOSED CONDUIT OR CABLE
- BURIED OR CONCEALED CONDUIT IN FLOOR OR GROUND
- BURIED OR CONCEALED CONDUIT IN CEILING OR WALLS
- CONDUIT OR CABLE TURNING AWAY OR DOWN
- CONDUIT OR CABLE TURNING UPWARD
- CONDUIT CAPPED OR CABLE DEAD END
- PB — PULL BOX
- MH — MANHOLE
- 362+00 — STATIONING
- NS — AMBIENT NOISE SENSOR
- MIC — MICROPHONE
- WAP — WIRELESS ACCESS POINT WITH DIRECTIONAL ANTENNA
- WAP — WIRELESS ACCESS POINT WITH OMNI ANTENNA
- XX — DUAL IMAGE CAMERA WITH FIXED LENS VIEWING DIRECTION CAMERA
  - XX = DEVICE DESCRIPTION
  - TYPE 1 = RECESSED CEILING MOUNTED
  - TYPE 2 = SURFACE MOUNTED
  - TYPE 3 = PENDANT MOUNTED
- PTZ — CAMERA WITH PAN TILT ZOOM
- DMS — DYNAMIC MESSAGE SIGN
- HUB — COMMUNICATIONS HUB
- HPT — HELP POINT TELEPHONE
- BL — BLUE LIGHT
- T — TELEPHONE
- SVT — SECURITY VIDEO TERMINAL
- IDF — INTERMEDIATE DISTRIBUTION FRAME
- DAS — DIGITAL ADVERTISING SIGN
- MC — MEDIA CONVERTER
- CONDUIT EXPOSE OR CONCEALED IN WALL OR CEILING
- CONDUIT INSTALL IN UNDERGROUND OR CONCRETE SLAB
- 1 — PLAN KEY NOTES
- CXX — CONDUIT TAGGING
- SCREW COVER METAL PULL BOX
- MDS — MAIN DEPARTURE SIGN
- BC — BALANCE CHECKER
- LOS — LINE OF SIGHT MONITOR
- AV — AV JUNCTION BOX. PROVIDE A 4-11/16" SQUARE BY 2-1/8" DEEP BACK BOX WITH BLANK FACE PLATE, UNO.
- HC — ELEVATOR CALL BUTTON

GENERAL NOTES

1. ALL CABLE PLACEMENT SHOWN ON THE CONTRACT DRAWINGS IS SCHEMATIC ONLY, AND WILL NOT BE USED TO DETERMINE EXACT CONDUIT ROUTING.
2. IT IS THE CONTRACTOR'S RESPONSIBILITY TO LOCATE AND IDENTIFY ALL EXISTING CABLES AND UTILITIES BEFORE COMMENCEMENT OF CONSTRUCTION.
3. THE CONTRACTOR SHALL REMOVE EXISTING COPPER CABLE AND TELEPHONE JUNCTION BOXES AFTER CUT-OVER TO THE NEW CABLES.
4. THE CONTRACTOR SHALL REQUEST AND NOTIFY CTA IN ANY AND ALL SERVICE INTERRUPTION.
5. THE CONTRACTOR RESPONSIBLE FOR THE EXECUTION OF THIS WORK SHALL BECOME THOROUGHLY FAMILIAR WITH THE PROJECT SPECIFICATIONS BEFORE COMMENCING ANY WORK. THE PROJECT SPECIFICATIONS AND DRAWINGS FORM THE BASIS OF THIS CONTRACT REQUIREMENTS AND INCLUDE THE TYPE AND GRADE OF MATERIALS TO BE INSTALLED, EQUIPMENT TO BE FURNISHED, THE MANNER BY WHICH TO BE INSTALLED AND WHERE TO BE LOCATED IN THE EVENT OF A CONFLICT BETWEEN THE PROJECT SPECIFICATIONS AND DRAWINGS. SPECIFICATIONS GOVERN UNLESS THE ARCHITECT/ENGINEER DIRECTS OTHERWISE.
6. THE CONTRACTOR SHALL CHECK CAREFULLY ALL CONSTRUCTION DRAWINGS AND SPECIFICATIONS THAT ARE PART OF THIS PROJECT TO INSURE THAT NO COMMUNICATION WIRING AND CONDUIT WILL BE OMITTED. THE CONTRACTOR SHALL CONSULT ALL TRADES FURNISHING EQUIPMENT AND OBTAIN FROM THEM ALL DATA. PROVIDE THE WIRING AND CONTROL STATIONS REQUIRED FOR THE PROPER FUNCTION OF BUILDING EQUIPMENT.
7. EQUIPMENT LABELS AND INSTRUCTIONS REGARDING THE APPLICATION AND INSTALLATION OF THE LISTED EQUIPMENT SHALL BE FOLLOWED TO ENSURE THAT THE EQUIPMENT IS BEING INSTALLED IN ACCORDANCE WITH THE MANUFACTURER'S LISTING INSTRUCTIONS.
8. COORDINATE WITH OTHER TRADES AND INSTALL CONDUIT AND BOXES TO CLEAR EMBEDDED DUCTS OPENINGS AND OTHER STRUCTURAL FEATURES.
9. CONTRACTOR SHALL COORDINATE EXACT LOCATIONS AND MOUNTING HEIGHTS OF ALL DEVICES WITH THE ARCHITECTURAL PLANS, INCLUDING BUT NOT LIMITED TO ARCHITECTURAL DETAILS, SECTIONS, AND ELEVATIONS.
10. CONDUITS INSTALLED IN PUBLIC SPACES SHALL BE INSTALLED CONCEALED BEHIND THE FINISHED WALL AND/OR CEILING OR IN SLAB IF NECESSARY. THE CONTRACTOR SHALL CHANNEL THE CEILING OR FLOOR SLAB AS REQUIRED WITHOUT CUTTING OR DAMAGING ANY REINFORCING STEEL AND PATCH REMOVED AREAS. THE CONTRACTOR SHALL SUBMIT CONDUIT DRAWINGS SHOWING EXTENT OF CONDUIT INSTALLATION ROUTING FOR APPROVAL BY COMMISSIONER.
11. FOR CLARITY NOT ALL JUNCTION BOXES, WHIP CONNECTIONS, AND CABLES SHOWN ON THE DRAWINGS.
12. ALL COMMUNICATION DRAWINGS ARE TO BE READ IN CONJUNCTION WITH THE PROJECT SPECIFICATIONS AND ALL OTHER DRAWINGS RELATED TO THE PERFORMANCE OF THE WORK.
13. EQUIPMENT & DEVICE LABELS AND INSTRUCTIONS REGARDING THE APPLICATION AND INSTALLATION OF THE LISTED EQUIPMENT SHALL BE FOLLOWED TO INSURE THAT THE EQUIPMENT IS BEING INSTALLED IN ACCORDANCE WITH THE MANUFACTURER'S LISTING INSTRUCTIONS
14. COMMUNICATION DRAWINGS ARE DIAGRAMATIC IN NATURE. NO DIMENSIONS SHALL BE SCALED OFF COMMUNICATION DRAWINGS. CONTRACTOR SHALL CONSULT ARCHITECTURAL FLOOR PLANS, ELEVATIONS AND REFLECTED CEILING PLANS FOR EXACT LOCATIONS OF MISCELLANEOUS DEVICES.
15. PROVIDE MAXIMUM OF 3' FLEXIBLE CONDUIT FROM JUNCTION BOXES TO DEVICES.

SYMBOLS (CONT.)

- AA / XX ▽ — VOICE OUTLET, WALL-MOUNTED
- AA ▼ — DATA OUTLET, WALL-MOUNTED
- BB ▼ — VOICE/DATA OUTLET, WALL-MOUNTED
- BB ▼ — VOICE/DATA OUTLET, FLOOR-MOUNTED
- BB ▼ — VOICE/DATA OUTLET, CEILING-MOUNTED

XX = DEVICE DESCRIPTION
- TYPE 1 = EQUIPMENT ROOM TELEPHONE
- TYPE 2 = OUTDOOR TELEPHONE
- TYPE 3 = CUSTOMER ATTENDANT KIOSK TELEPHONE
- TYPE 4 = HELP POINT TELEPHONE (CUSTOMER ASSISTANCE)
- TYPE 5 = LOCK-BOX TELEPHONE
- TYPE 6 = SUBWAY EMERGENCY TELEPHONE
- TYPE 7 = ELEVATOR TELEPHONE
- TYPE 8 = VOIP TELEPHONE

AA = NUMBER OF JACKS PER OUTLET / FACEPLATE IF > 1

BB = NUMBER OF VOICE-DEDICATED AND DATA-DEDICATED JACKS PER FACEPLATE
- (NO SUBSCRIPT) = (1) VOICE / (1) DATA)
- 4A = (3) CAT 6 DATA AND (1) DUPLEX LC MM DATA
- 6 = (1) VOICE / (5) DATA

DESIGN BY:										
DRAWN BY:										
CHECKED BY:										
APPROVED BY:		4	7/3/2023	ISSUED FOR BID	JM	EM	OS			
CDOT/APPROVED BY:		NO.	DATE	REVISIONS	DES.	DRW.	CHK.	DCCO	CDOT	

TRANSYSTEMS
222 SOUTH RIVERSIDE PLAZA SUITE 610
CHICAGO, ILLINOIS 60606

SKIDMORE, OWINGS & MERRILL LLP
224 SOUTH MICHIGAN AVENUE, SUITE 1000
CHICAGO, ILLINOIS 60604

FACET ENGINEERING
4316 NORTH ELSTON AVENUE
CHICAGO, ILLINOIS 60641

CHICAGO DEPARTMENT OF TRANSPORTATION
DIVISION OF ENGINEERING

STATE / LAKE LOOP ELEVATED STATION
200 NORTH STATE STREET, CHICAGO, IL 60601

GENERAL NOTES, ABBREVIATIONS AND SYMBOLS

CDOT PROJECT D-1-209 | DATE: 9/9/2022

SPEC. NO.

DRAWING NO. T-001

REVISION NO.

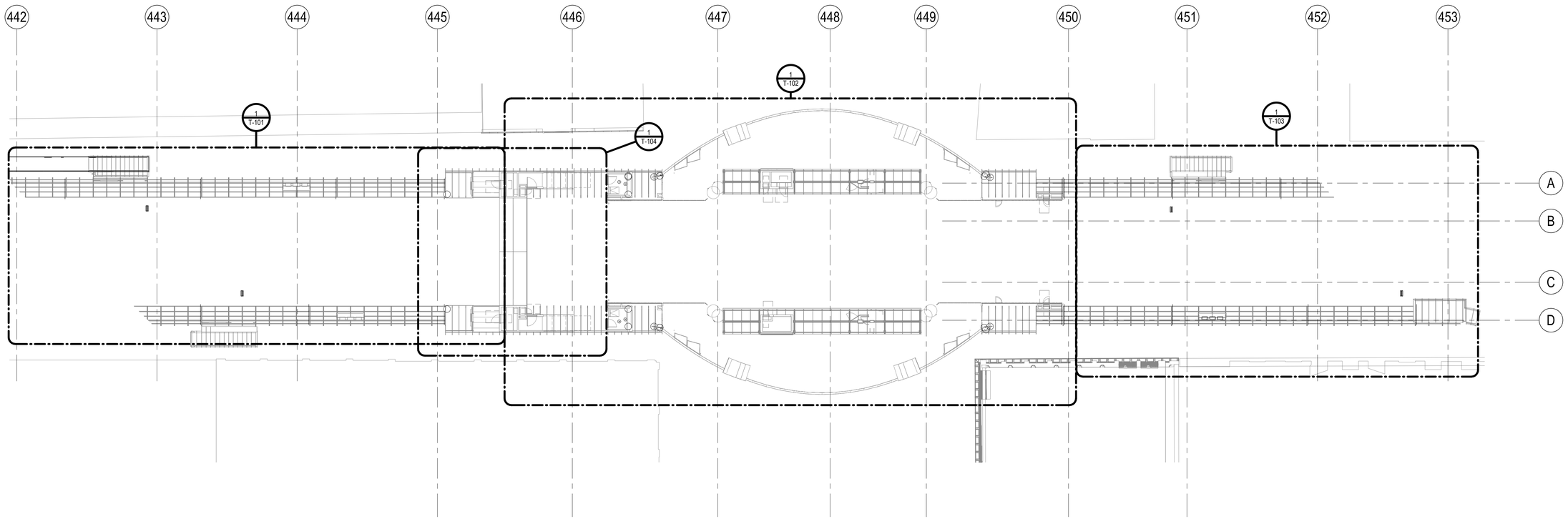

1 OVERALL PLATFORM LEVEL COMMUNICATIONS PLAN

1" = 20'-0"

LAKE ST. KEY PLAN:

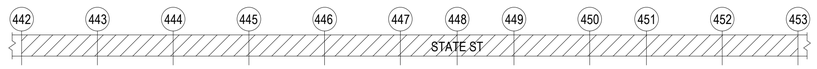

DESIGN BY:										
DRAWN BY:										
CHECKED BY:										
APPROVED BY:		4	7/3/2023	ISSUED FOR BID	JM	EM	OS			
CDOT/APPROVED BY:		NO.	DATE	REVISIONS	DES.	DRW.	CHK.	DCCO	CDOT	

TRANSYSTEMS
222 SOUTH RIVERSIDE PLAZA SUITE 610
CHICAGO, ILLINOIS 60606

SKIDMORE, OWINGS & MERRILL LLP
224 SOUTH MICHIGAN AVENUE, SUITE 1000
CHICAGO, ILLINOIS 60604

FACET ENGINEERING
4316 NORTH ELSTON AVENUE
CHICAGO, ILLINOIS 60641

CHICAGO DEPARTMENT OF TRANSPORTATION
DIVISION OF ENGINEERING

STATE / LAKE LOOP ELEVATED STATION
200 NORTH STATE STREET, CHICAGO, IL 60601

PLATFORM LEVEL - OVERALL PLAN

CDOT PROJECT D-1-209

DATE: 9/9/2022

SPEC. NO.

DRAWING NO. T-010

REVISION NO.

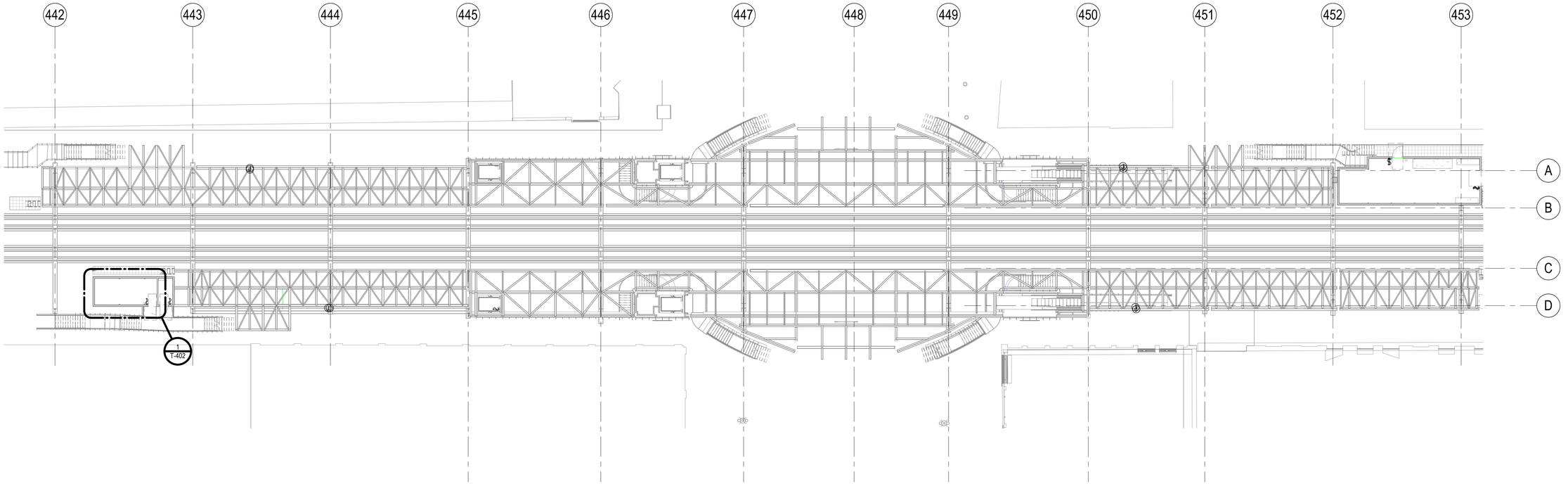

1 MEZZANINE LEVEL - OVERALL COMMUNICATIONS PLAN

1" = 20'-0"

LAKE ST. KEY PLAN:

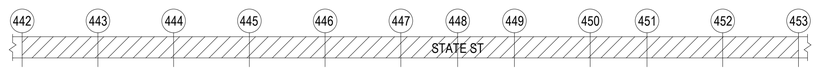

DESIGN BY:										
DRAWN BY:										
CHECKED BY:										
APPROVED BY:		4	7/3/2023	ISSUED FOR BID	EM	SRM	SM			
CDOT/APPROVED BY:		NO.	DATE	REVISIONS	DES.	DRW.	CHK.	DCCO	CDOT	

TRANSYSTEMS
222 SOUTH RIVERSIDE PLAZA SUITE 610
CHICAGO, ILLINOIS 60606

SKIDMORE, OWINGS & MERRILL LLP
224 SOUTH MICHIGAN AVENUE, SUITE 1000
CHICAGO, ILLINOIS 60604

FACET ENGINEERING
4316 NORTH ELSTON AVENUE
CHICAGO, ILLINOIS 60641

CHICAGO DEPARTMENT OF TRANSPORTATION
DIVISION OF ENGINEERING

STATE / LAKE LOOP ELEVATED STATION
200 NORTH STATE STREET, CHICAGO, IL 60601

MEZZANINE LEVEL - OVERALL PLAN

CDOT PROJECT D-1-209

DATE: 9/9/2022

SPEC. NO.

DRAWING NO. T-011

REVISION NO.

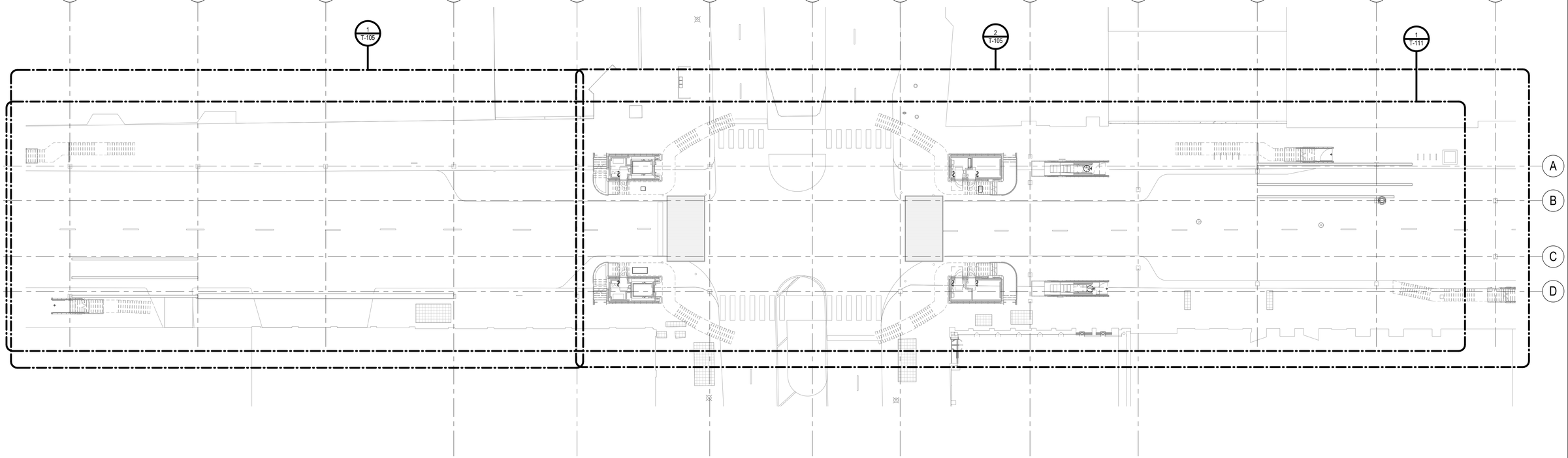

1 STREET LEVEL - OVERALL COMMUNICATIONS PLAN

1" = 20'-0"

LAKE ST. KEY PLAN:

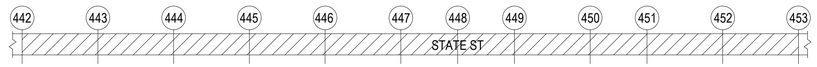

DESIGN BY:										
DRAWN BY:										
CHECKED BY:										
APPROVED BY:		4	7/3/2023	ISSUED FOR BID	JM	SRM	SM			
CDOT/APPROVED BY:		NO.	DATE	REVISIONS	DES.	DRW.	CHK.	DCCO	CDOT	

TRANSYSTEMS
222 SOUTH RIVERSIDE PLAZA SUITE 610
CHICAGO, ILLINOIS 60606

SKIDMORE, OWINGS & MERRILL LLP
224 SOUTH MICHIGAN AVENUE, SUITE 1000
CHICAGO, ILLINOIS 60604

FACET ENGINEERING
4316 NORTH ELSTON AVENUE
CHICAGO, ILLINOIS 60641

CHICAGO DEPARTMENT OF TRANSPORTATION
DIVISION OF ENGINEERING

STATE / LAKE LOOP ELEVATED STATION
200 NORTH STATE STREET, CHICAGO, IL 60601

STREET LEVEL - OVERALL PLAN

CDOT PROJECT D-1-209

DATE: 9/9/2022

SPEC. NO.

DRAWING NO. T-012

REVISION NO.

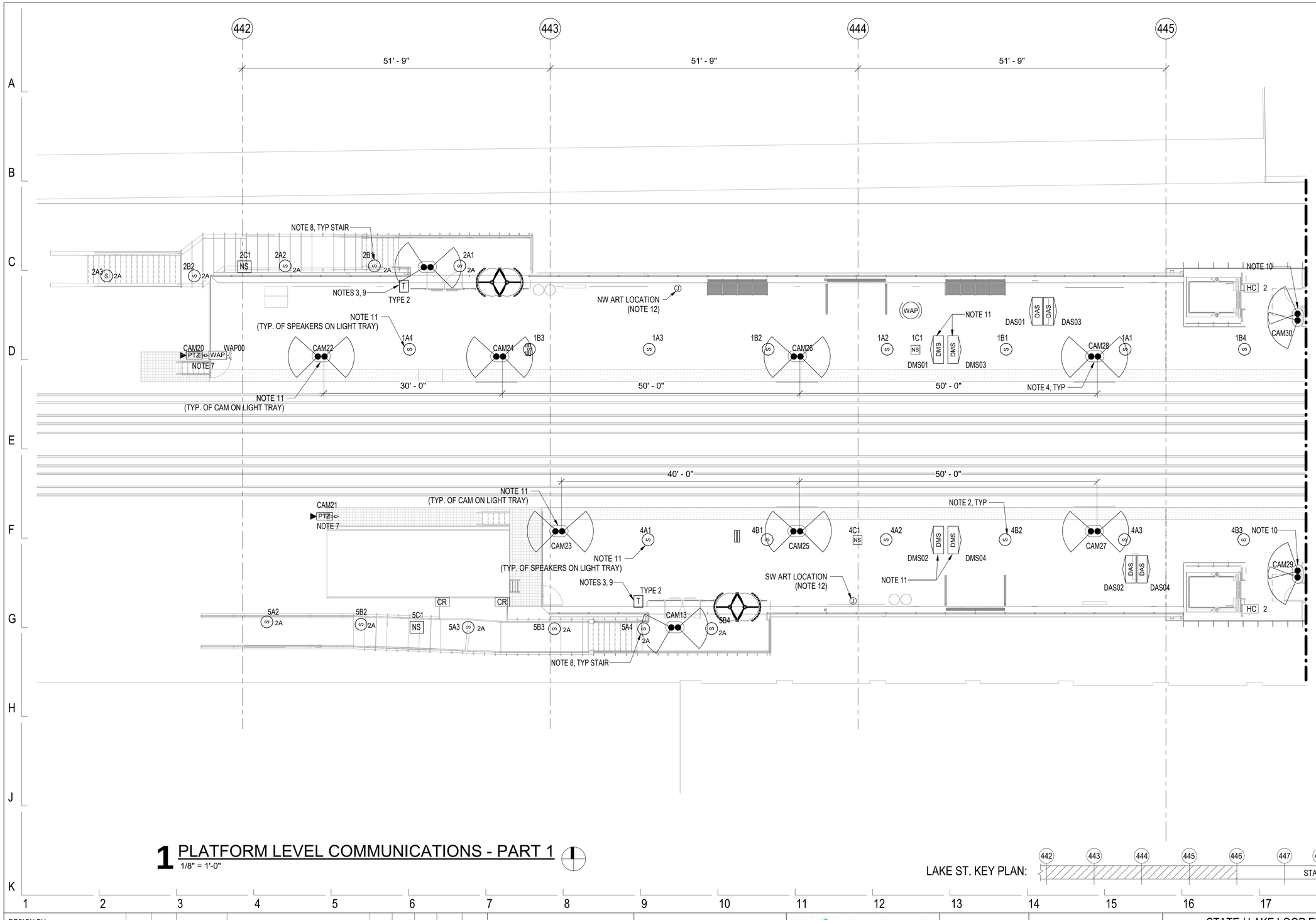

NOTES:

1. SEE DRAWING T-001 FOR COMMUNICATIONS SYMBOL LIST, GENERAL NOTES AND ABBREVIATIONS.
2. REFER TO DWG T-601 FOR PUBLIC ADDRESS CONDUIT AND WIRING REQUIREMENTS.
3. REFER TO DWG T-602 FOR TELEPHONE SYSTEM CONDUIT AND WIRING REQUIREMENTS.
4. REFER TO DWG T-603 FOR CCTV SYSTEM CONDUIT AND WIRING REQUIREMENTS.
5. REFER TO T-604 FOR CARD READER CONDUIT AND WIRING REQUIREMENTS.
6. REFER TO DWG T-608 FOR ELEVATOR CONDUIT AND WIRING REQUIREMENTS.
7. CAMERA AND WAP POLE MOUNTED. POLE SHALL BE 14' TALL MOUNTED TO LANDING. REFER TO STRUCTURAL FOR MOUNTING.
8. SPEAKER MOUNTED IN STAIR STRUCTURAL TUBE. REFER TO DETAIL 6 ON ARCH. DRAWING A-543 FOR INSTALLATION DETAIL.
9. TYPE 2 TELEPHONE MOUNTED IN ARCHITECTURAL ENCLOSURE. REFER TO ARCHITECTURAL DRAWINGS FOR INTALLATION DETAIL.
10. WALL MTD AT 9' AFF.
11. REFER TO DETAIL 7 ON E-506 AND TO DETAIL 7 ON ARCH. DRAWING A-552 FOR CAMERA, DMS AND SPEAKER CABLE TRAY INSTALLATION DETAIL.
12. JUNCTION BOX LOCATED BELOW SLAB. 3/4" GRS CONDUIT STUB UP THROUGH SLAB. PROVIDE (1) CAT6 IN 3/4" GRS CONDUIT TO COMM HUB-1. CONTRACTOR TO COORDINATE FINAL LOCATION WITH CTA.

1 PLATFORM LEVEL COMMUNICATIONS - PART 1

1/8" = 1'-0"

LAKE ST. KEY PLAN:

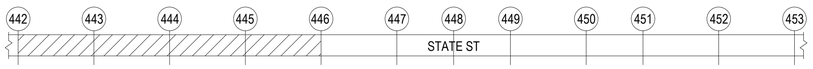

DESIGN BY:										
DRAWN BY:										
CHECKED BY:										
APPROVED BY:		4	7/3/2023	ISSUED FOR BID	JM	EM	OS			
CDOT/APPROVED BY:		NO.	DATE	REVISIONS	DES.	DRW.	CHK.	DCCO	CDOT	

TRANSYSTEMS
222 SOUTH RIVERSIDE PLAZA SUITE 610
CHICAGO, ILLINOIS 60606

SKIDMORE, OWINGS & MERRILL LLP
224 SOUTH MICHIGAN AVENUE, SUITE 1000
CHICAGO, ILLINOIS 60604

FACET ENGINEERING
DBE/MBE CERTIFIED
Performance • Respect • Initiation • Dedication • Experience
FACET ENGINEERING
4316 NORTH ELSTON AVENUE
CHICAGO, ILLINOIS 60641

CHICAGO DEPARTMENT OF TRANSPORTATION
DIVISION OF ENGINEERING

STATE / LAKE LOOP ELEVATED STATION
200 NORTH STATE STREET, CHICAGO, IL 60601

PLATFORM LEVEL PLAN - WEST

CDOT PROJECT D-1-209

DATE: 9/9/2022

SPEC. NO.

DRAWING NO. T-101

REVISION NO.

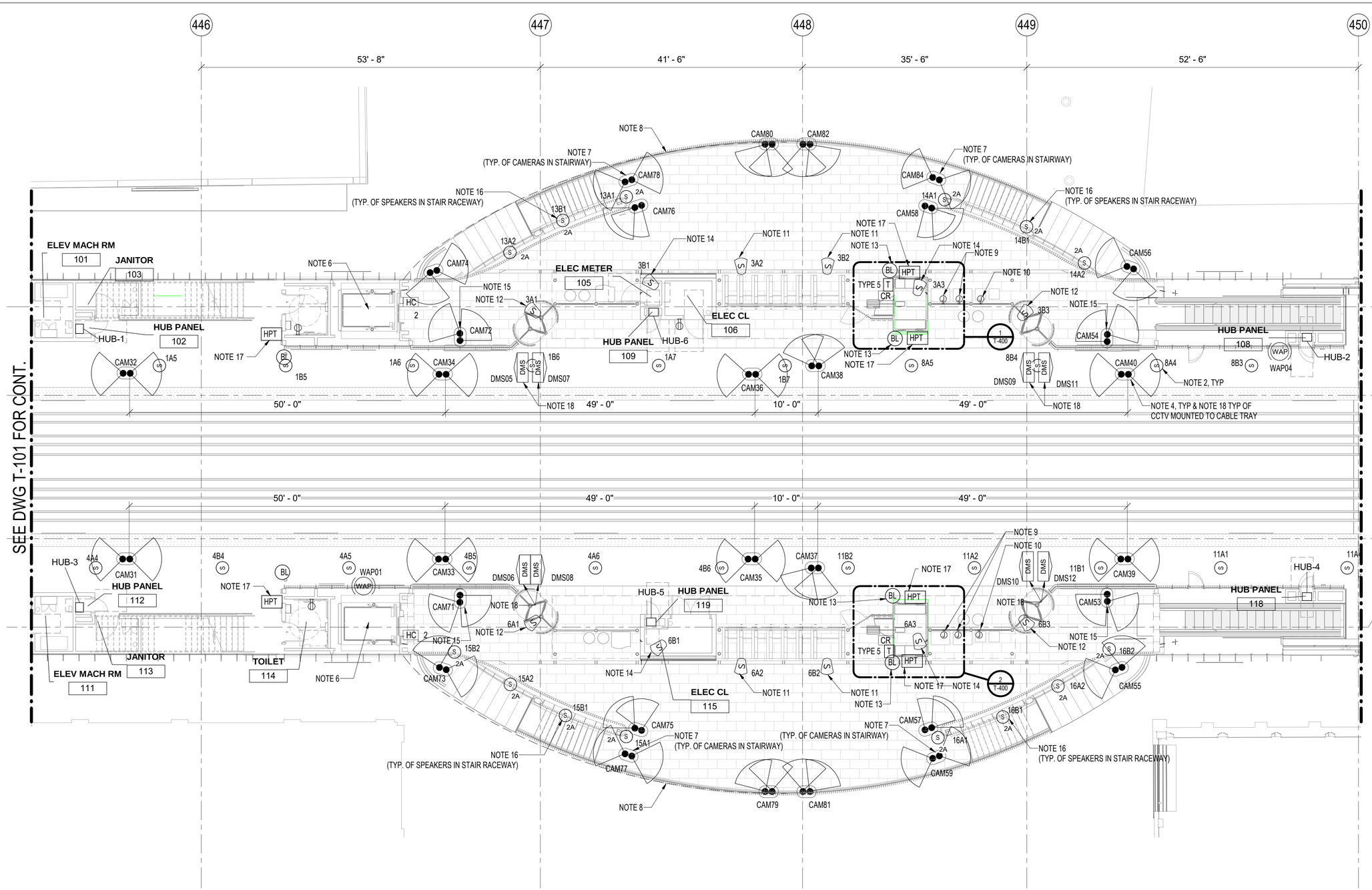

1 PLATFORM LEVEL COMMUNICATIONS - PART 2

1/8" = 1'-0"

NOTES:

1. SEE DRAWING T-001 FOR COMMUNICATIONS SYMBOL LIST, GENERAL NOTES AND ABBREVIATIONS.
2. REFER TO DWG T-601 FOR PUBLIC ADDRESS CONDUIT AND WIRING REQUIREMENTS.
3. REFER TO DWG T-602 FOR TELEPHONE SYSTEM CONDUIT AND WIRING REQUIREMENTS.
4. REFER TO DWG T-603 FOR CCTV SYSTEM CONDUIT AND WIRING REQUIREMENTS.
5. REFER TO T-604 FOR CARD READER CONDUIT AND WIRING REQUIREMENTS.
6. REFER TO DWG T-608 FOR ELEVATOR CONDUIT AND WIRING REQURIEMENTS.
7. MOUNT TO STAIR CANOPY. REFER TO DETAIL 8 ON ARCHITECTURAL DRAWINGS A-541 FOR INSTALLATION DETAILS.
8. CCTV CONDUIT ROUTED IN BRIM BEAM ENCLOSURE.
9. TVM EQUIPMENT CONDUIT STUB UP THROUGH FLOOR FOR DATA PER DWG T-607. PROVIDE ADDITIOANL 1" C WITH CABLE FROM TVM TO CAK.
10. ATM EQUIPMENT CONDUIT STUB UP THROUGH FLOOR FOR DATA. REFER TO DWG T-607.
11. MOUNT SPEAKER WITHIN SIGN HOUSING. REFER TO ARCHITECTURAL SIGNAGE DRAWINGS FOR INSTALLATION DETAILS.
12. MOUNT SPEAKER ABOVE TURNSTYLE. REFER TO ARCHITECTURAL DRAWINGS FOR INSTALLATION DETAILS.
13. MOUNT BLUE LIGHT TO VERTIAL FACE WALL ABOVE ROOF. REFER TO DETAIL 3 ON ARCHITECTURAL DRAWING A-522 FOR INSTALLATION DETAILS.
14. MOUNT SPEAKER IN ROOF AREA. REFER TO ARCHITECTURAL DRAWINGS FOR INSTALLATION DETAILS.
15. MOUNT CCTV CAMERA ON END OF ELEVATOR SIGN. REFER TO ARCHITECTURAL SIGNAGE DRAWINGS FOR INSTALLATION DETAILS.
16. SPEAKER INSTALLED IN STAIR RACEWAY. REFER TO DETAIL 4 ON ARCHITECTURAL DRAWING A-541.
17. REFER TO DETAIL 2 ON ARCHITECTURAL DRAWING A-522 FOR HELP POINT TELEPHONE INSTALLATION.
18. REFER TO DETAIL 7 ON E-506 AND TO DETAIL 7 ON ARCH. DRAWING A-552 FOR CAMERA, DMS AND SPEAKER CABLE TRAY INSTALLATION DETAIL.

LAKE ST. KEY PLAN:

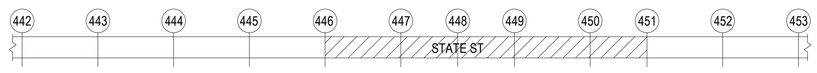

DESIGN BY:										
DRAWN BY:										
CHECKED BY:										
APPROVED BY:		4	7/3/2023	ISSUED FOR BID	JM	EM	OS			
CDOT/APPROVED BY:		NO.	DATE	REVISIONS	DES.	DRW.	CHK.	DCCO	CDOT	

TRANSYSTEMS
222 SOUTH RIVERSIDE PLAZA SUITE 610
CHICAGO, ILLINOIS 60606

SKIDMORE, OWINGS & MERRILL LLP
224 SOUTH MICHIGAN AVENUE, SUITE 1000
CHICAGO, ILLINOIS 60604

FACET ENGINEERING
4316 NORTH ELSTON AVENUE
CHICAGO, ILLINOIS 60641

CHICAGO DEPARTMENT OF TRANSPORTATION
DIVISION OF ENGINEERING

STATE / LAKE LOOP ELEVATED STATION
200 NORTH STATE STREET, CHICAGO, IL 60601

PLATFORM LEVEL PLAN - CENTER

SPEC. NO.

DRAWING NO. T-102

CDOT PROJECT D-1-209

DATE: 9/9/2022

REVISION NO.

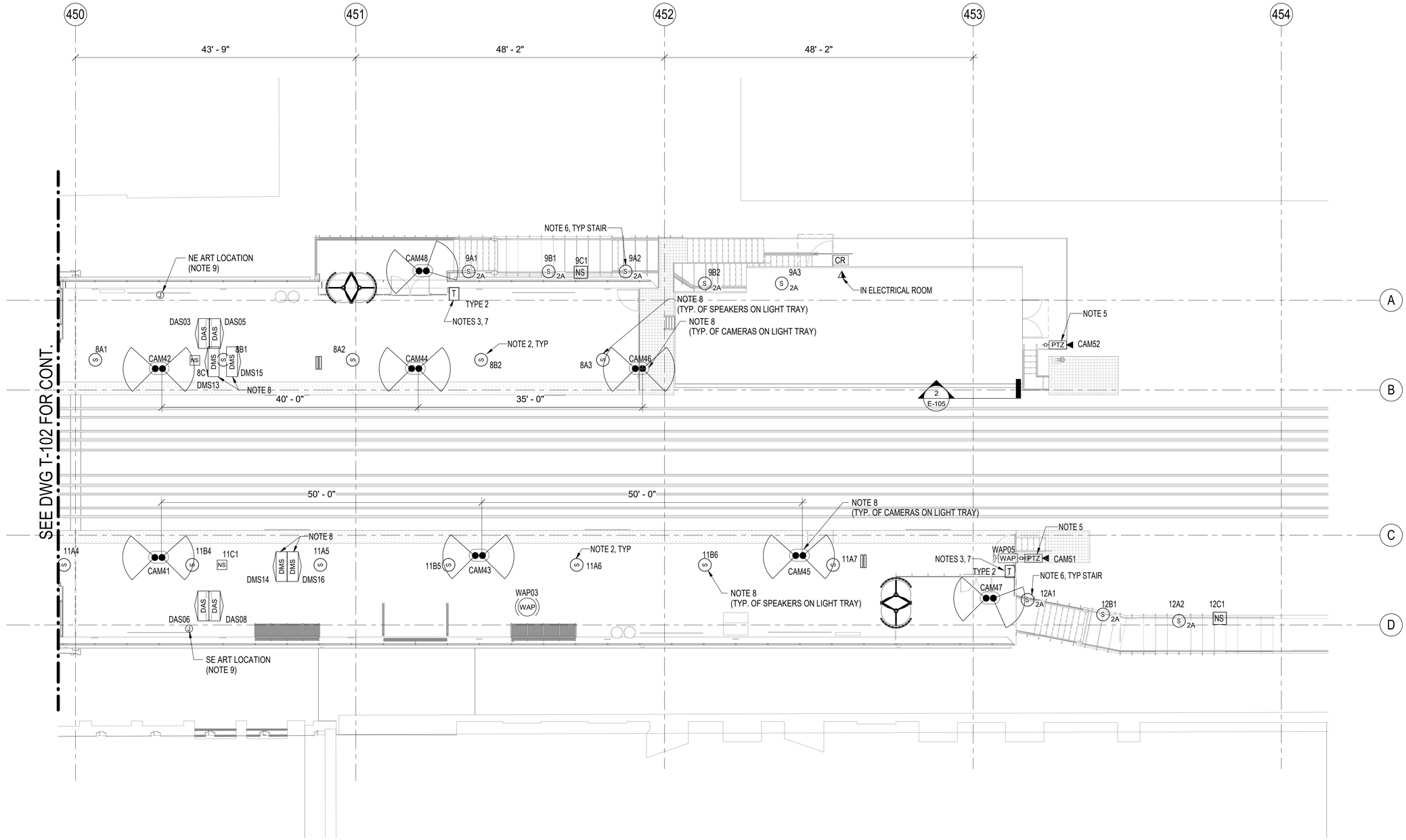

NOTES:

1. SEE DRAWING T-001 FOR COMMUNICATIONS SYMBOL LIST, GENERAL NOTES AND ABBREVIATIONS.
2. REFER TO DWG T-601 FOR PUBLIC ADDRESS CONDUIT AND WIRING REQUIREMENTS.
3. REFER TO DWG T-602 FOR TELEPHONE SYSTEM CONDUIT AND WIRING REQUIREMENTS.
4. REFER TO DWG T-603 FOR CCTV SYSTEM CONDUIT AND WIRING REQUIREMENTS.
5. CAMERA AND WAP POLE MOUNTED POLE SHALL BE 17' TALL AND MOUNTED TO LANDING. REFER TO STRUCTURAL DRAWINGS FOR MOUNTING DETAIL.
6. SPEAKER MOUNTED IN STAIR STRUCTURAL TUBE. REFER TO DETAIL 6 ON ARCH. DRAWING A-543 FOR INSTALLATION DETAIL.
7. TYPE 2 TELEPHONE MOUNTED IN ARCHITECTURAL ENCLOSURE. REFER TO ARCHITECTURAL DRAWING A-716 DETAILS 1 THROUGH 5.
8. REFER TO DETAIL 7 ON E-506 AND TO DETAIL 7 ON ARCH. DRAWING A-552 FOR CAMERA, DMS AND SPEAKER CABLE TRAY INSTALLATION DETAIL.
9. JUNCTION BOX LOCATED BELOW SLAB. 3/4" GRS CONDUIT STUB UP THROUGH SLAB. PROVIDE (1) CAT6 IN 3/4" GRS CONDUIT TO COMM HUB-1. CONTRACTOR TO COORDINATE FINAL LOCATION WITH CTA.

1 PLATFORM LEVEL COMMUNICATIONS - PART 3

1/8" = 1'-0"

LAKE ST. KEY PLAN:

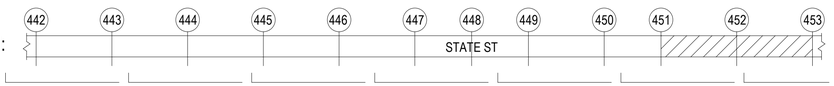

DESIGN BY:										
DRAWN BY:										
CHECKED BY:										
APPROVED BY:		4	7/3/2023	ISSUED FOR BID	JM	EM	OS			
CDOT/APPROVED BY:		NO.	DATE	REVISIONS	DES.	DRW.	CHK.	DCCO	CDOT	

TRANSYSTEMS
222 SOUTH RIVERSIDE PLAZA SUITE 610
CHICAGO, ILLINOIS 60606

SKIDMORE, OWINGS & MERRILL LLP
224 SOUTH MICHIGAN AVENUE, SUITE 1000
CHICAGO, ILLINOIS 60604

FACET ENGINEERING
4316 NORTH ELSTON AVENUE
CHICAGO, ILLINOIS 60641

CHICAGO DEPARTMENT OF TRANSPORTATION
DIVISION OF ENGINEERING

STATE / LAKE LOOP ELEVATED STATION
200 NORTH STATE STREET, CHICAGO, IL 60601

PLATFORM LEVEL PLAN - EAST

CDOT PROJECT D-1-209

DATE: 9/9/2022

SPEC. NO.

DRAWING NO. T-103

REVISION NO.

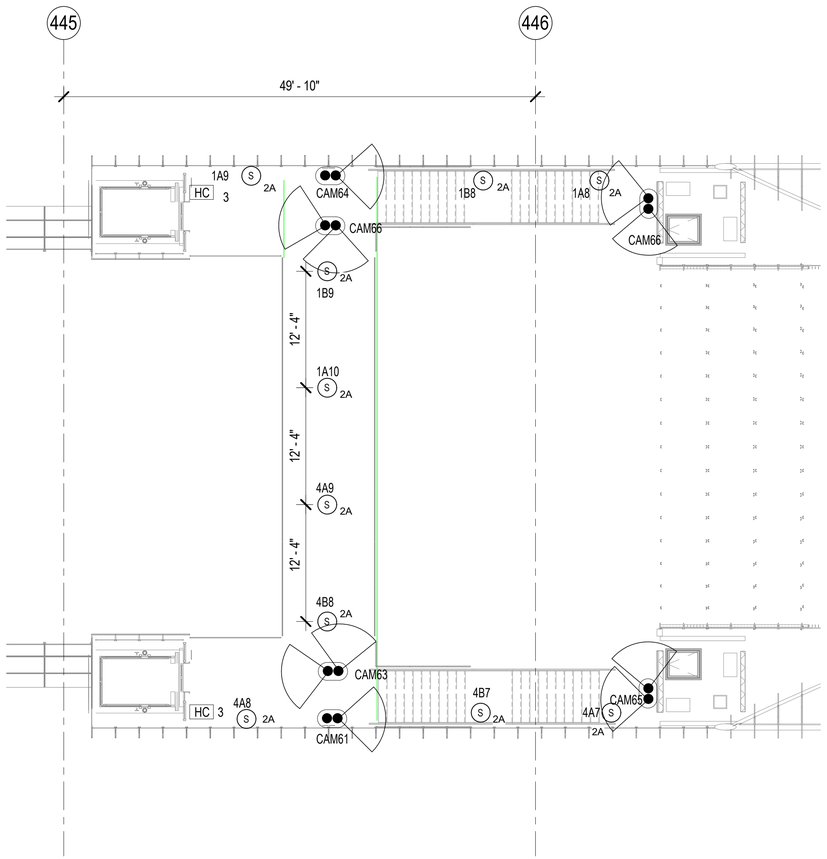

1 FLYOVER LEVEL COMMUNICATIONS PLAN

1/8" = 1'-0"

NOTES:

1. SEE DRAWING T-001 FOR COMMUNICATIONS SYMBOL LIST, GENERAL NOTES AND ABBREVIATIONS.
2. REFER TO DWG T-601 FOR PUBLIC ADDRESS CONDUIT AND WIRING REQUIREMENTS.
3. REFER TO DWG T-602 FOR TELEPHONE SYSTEM CONDUIT AND WIRING REQUIREMENTS.
4. REFER TO DWG T-603 FOR CCTV SYSTEM CONDUIT AND WIRING REQUIREMENTS.
5. REFER TO T-604 FOR CARD READER CONDUIT AND WIRING REQUIREMENTS.
6. REFER TO DWG T-608 FOR ELEVATOR CONDUIT AND WIRING REQURIEMENTS.

LAKE ST. KEY PLAN:

DESIGN BY:										
DRAWN BY:										
CHECKED BY:										
APPROVED BY:		4	7/3/2023	ISSUED FOR BID	JM	SRM	SM			
CDOT/APPROVED BY:		NO.	DATE	REVISIONS	DES.	DRW.	CHK.	DCCO	CDOT	

TRANSYSTEMS
222 SOUTH RIVERSIDE PLAZA SUITE 610
CHICAGO, ILLINOIS 60606

SKIDMORE, OWINGS & MERRILL LLP
224 SOUTH MICHIGAN AVENUE, SUITE 1000
CHICAGO, ILLINOIS 60604

FACET ENGINEERING
4316 NORTH ELSTON AVENUE
CHICAGO, ILLINOIS 60641

CHICAGO DEPARTMENT OF TRANSPORTATION
DIVISION OF ENGINEERING

STATE / LAKE LOOP ELEVATED STATION
200 NORTH STATE STREET, CHICAGO, IL 60601

FLYOVER LEVEL PLAN

CDOT PROJECT D-1-209 | DATE: 9/9/2022

SPEC. NO.

DRAWING NO. T-104

REVISION NO.

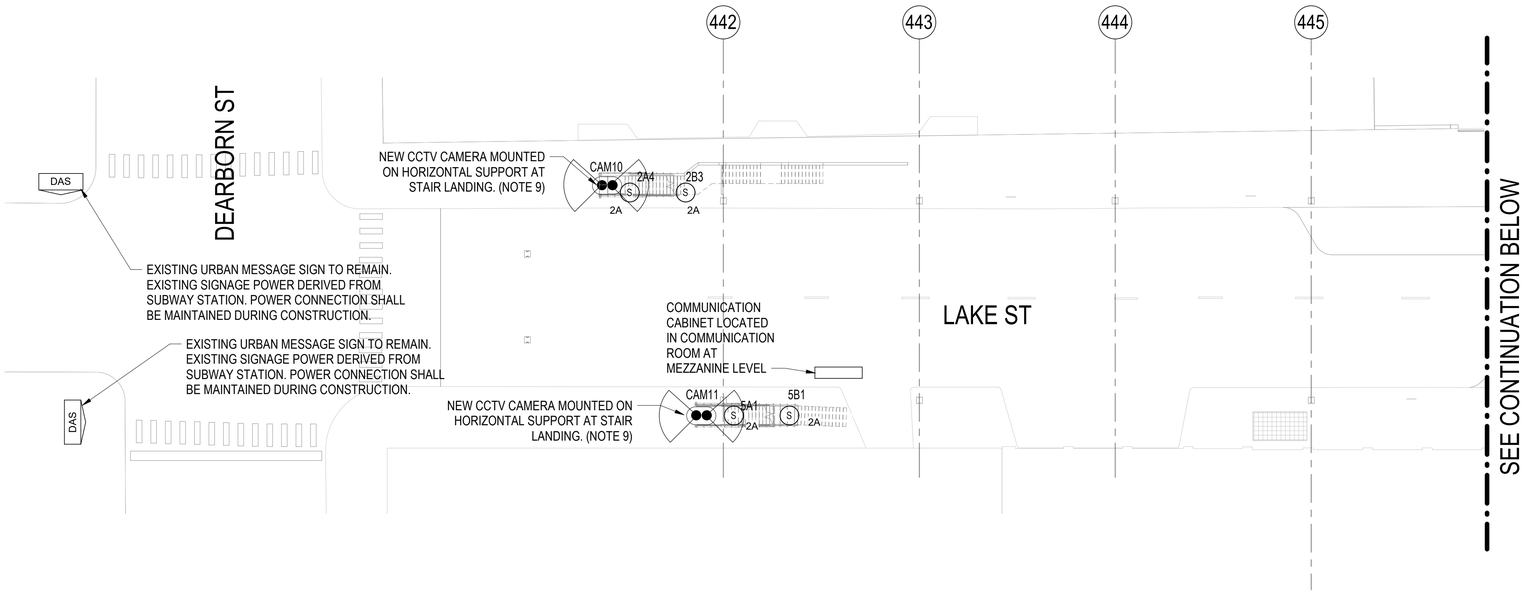

1 STREET LEVEL - PROPOSED COMMUNICATIONS PLAN - PART 1

1" = 20'-0"

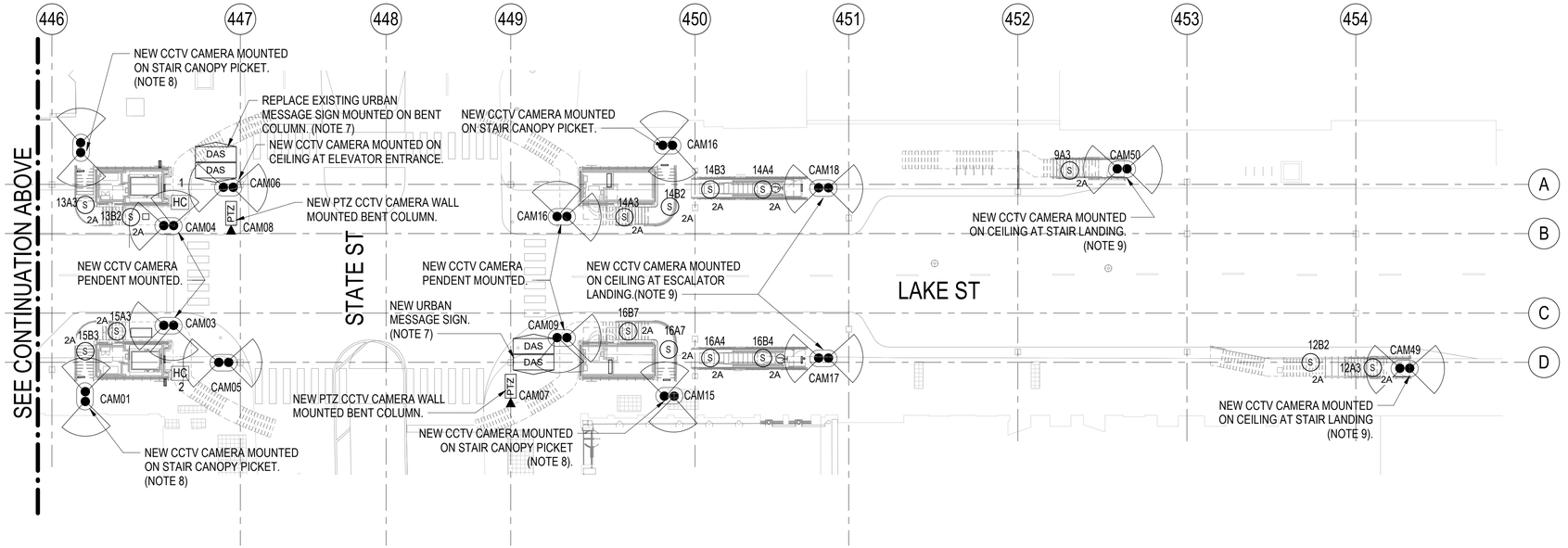

2 STREET LEVEL - PROPOSED COMMUNICATIONS PLAN - PART 2

1" = 20'-0"

LAKE ST. KEY PLAN:

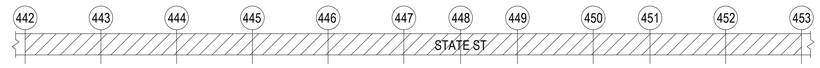

NOTES:

1. SEE DRAWING T-001 FOR COMMUNICATIONS SYMBOL LIST, GENERAL NOTES AND ABBREVIATIONS.
2. REFER TO DWG T-601 FOR PUBLIC ADDRESS CONDUIT AND WIRING REQUIREMENTS.
3. REFER TO DWG T-602 FOR TELEPHONE SYSTEM CONDUIT AND WIRING REQUIREMENTS.
4. REFER TO DWG T-603 FOR CCTV SYSTEM CONDUIT AND WIRING REQUIREMENTS.
5. REFER TO T-604 FOR CARD READER CONDUIT AND WIRING REQUIREMENTS.
6. REFER TO DWG T-608 FOR ELEVATOR CONDUIT AND WIRING REQURIEMENTS.
7. NEW URBAN SIGN AND IS EQUIPPED WITH CELLULAR INTERFACE. COMMUNICATIONS CABLING NOT REQURIED.
8. REFER TO DETAIL 8 ON ARCHITECTURAL DRAWINGS A-541 FOR CCTV INSTALLATION DETAILS.
9. REFER TO DETAIL 5 ON ARCHITECTURAL DRAWINGS A-523 FOR CCTV INSTALLATION DETAILS ON PLATFORM TO STREET LEVEL EXIT STAIRS AND ESCALATORS.

DESIGN BY:										
DRAWN BY:										
CHECKED BY:										
APPROVED BY:		4	7/3/2023	ISSUED FOR BID	JM	SRM	SM			
CDOT/APPROVED BY:		NO.	DATE	REVISIONS	DES.	DRW.	CHK.	DCCO	CDOT	

FACET ENGINEERING
DBE/MBE CERTIFIED
Performance • Respect • Initiation • Dedication • Experience
FACET ENGINEERING
4316 NORTH ELSTON AVENUE
CHICAGO, ILLINOIS 60641

CDOT
CHICAGO DEPARTMENT OF TRANSPORTATION
DIVISION OF ENGINEERING

STATE / LAKE LOOP ELEVATED STATION
200 NORTH STATE STREET, CHICAGO, IL 60601

STREET LEVEL PLAN

CDOT PROJECT D-1-209

DATE: 9/9/2022

SPEC. NO.

DRAWING NO. T-105

REVISION NO.

NOTES:

1. SEE DRAWING T-001 FOR COMMUNICATIONS SYMBOL LIST, GENERAL NOTES AND ABBREVIATIONS.
2. PROTECT EXISTING CTA COMMUNICATIONS 50 PR COPPER AND 96 STRAND FO BACKBONE CABLES DURING CONSTRUCTION.
3. PROVIDE NEW FO SPLICE ENCLOSURE. SPLICE NEW TEMPORARY FO CABLE TO EXISTING.
4. PROVIDE NEW TEMPORARY 96 STRAND FO AERIAL CABLE SUPPORTED FROM EXISTING BENT STRUCTURE TO REMAIN. PROTECT DURING CONSTRUCTION.
5. PULL BACK ALL EXISTING FO CABLE INTO NEW FO SPLICE ENCLOSURE.
6. PULL EXISTING 50PR CABLES OUT OF COMMUNICATION ENCLOSURE. PROVIDE 50PR COPPER SPLICE TO JOIN EXISTING CABLES. PROTECT DURING CONSTRUCTION.

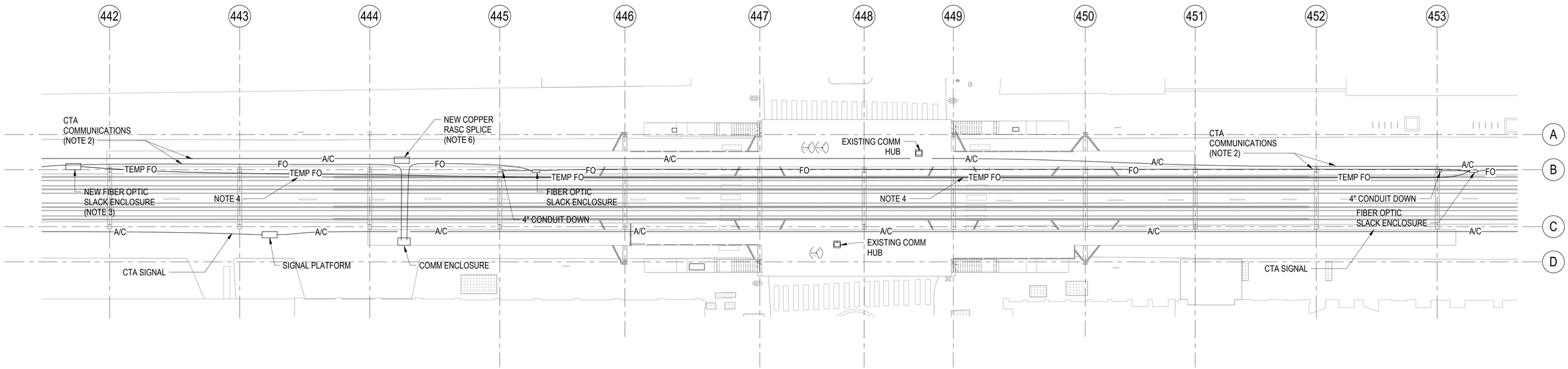

1 STREET LEVEL - EXISTING BACKBONE COMMUNICATIONS PLAN

1" = 20'-0"

LAKE ST. KEY PLAN:

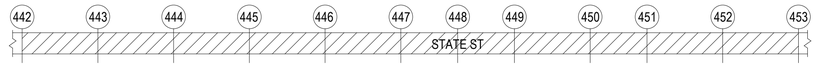

DESIGN BY:										
DRAWN BY:										
CHECKED BY:										
APPROVED BY:		4	7/3/2023	ISSUED FOR BID	JM	EM	SM			
CDOT/APPROVED BY:		NO.	DATE	REVISIONS	DES.	DRW.	CHK.	DCCO	CDOT	

TRANSYSTEMS
222 SOUTH RIVERSIDE PLAZA SUITE 610
CHICAGO, ILLINOIS 60606

SKIDMORE, OWINGS & MERRILL LLP
224 SOUTH MICHIGAN AVENUE, SUITE 1000
CHICAGO, ILLINOIS 60604

FACET ENGINEERING
4316 NORTH ELSTON AVENUE
CHICAGO, ILLINOIS 60641

CHICAGO DEPARTMENT OF TRANSPORTATION
DIVISION OF ENGINEERING

STATE / LAKE LOOP ELEVATED STATION
200 NORTH STATE STREET, CHICAGO, IL 60601

EXISTING BACKBONE COMMUNICATIONS PLAN

CDOT PROJECT D-1-209

DATE: 9/9/2022

SPEC. NO.

DRAWING NO. T-111

REVISION NO.

NOTES:

1. SEE DRAWING T-001 FOR COMMUNICATIONS SYMBOL LIST, GENERAL NOTES AND ABBREVIATIONS.
2. REMOVE TEMPORARY FO SPLICE AND PULL EXISTING COILED WESTBOUND FO CABLES TO NEW COMMUNICATIONS ROOM. PROVIDE NEW 3-1/2" RTRC CONDUIT ACROSS TRACKS INTO COMMUNICAITONS ROOM WITH CABLE.
3. PULL BACK TEMPORARY FO CABLE FROM FO SPLICE ENCLOSURE AT BENT 442 AND ROUTE IN NEW 3-12" RTRC CONDUIT TO NEW COMMUNICAITONS ROOM.
4. DISCONNECT WESTBOUND 50PR COPPER BACKBONE CABLE AT SPLICE AND PULL INTO NEW COMMUNICATIONS ROOM. PROVIDE NEW 50PR COPPER BACKBONE CABLE FROM SPLICE OF EASTBOUND CABLES TO COMMUNICATIONS ROOM. PROVIDE NEW 3-1/2" RTRC CONDUIT ACROSS TRACKS INTO COMMUNICAITONS ROOM WITH CABLE.S.

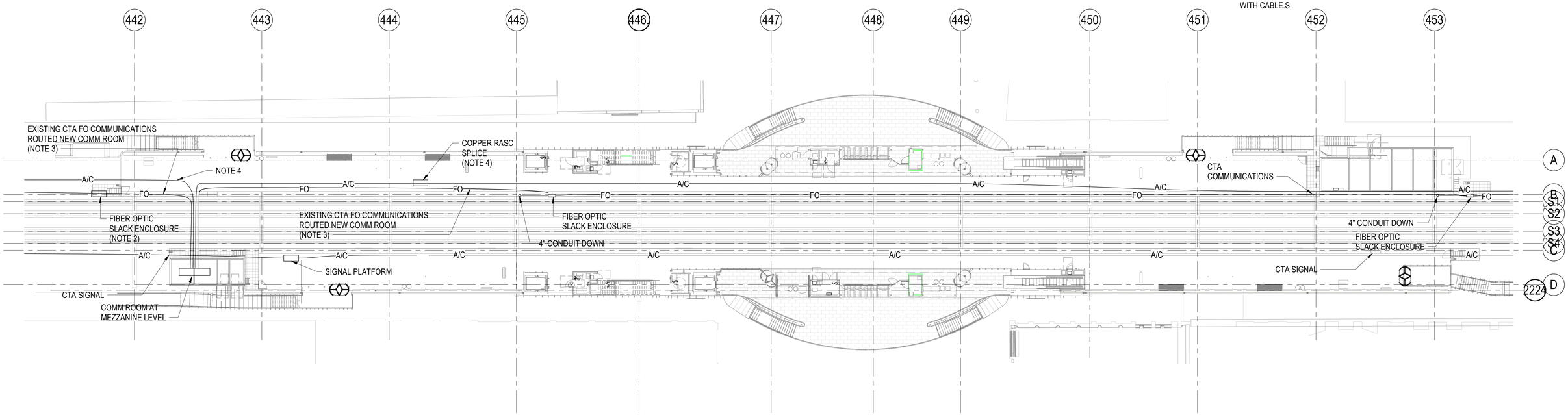

1 PLATFORM LEVEL - PROPOSED BACKBONE COMMUNICATIONS PLAN

1" = 20'-0"

LAKE ST. KEY PLAN:

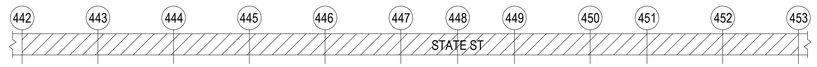

DESIGN BY:										
DRAWN BY:										
CHECKED BY:										
APPROVED BY:		4	7/3/2023	ISSUED FOR BID	JM	EM	SM			
CDOT/APPROVED BY:		NO.	DATE	REVISIONS	DES.	DRW.	CHK.	DCCO	CDOT	

TRANSYSTEMS
222 SOUTH RIVERSIDE PLAZA SUITE 610
CHICAGO, ILLINOIS 60606

SKIDMORE, OWINGS & MERRILL LLP
224 SOUTH MICHIGAN AVENUE, SUITE 1000
CHICAGO, ILLINOIS 60604

FACET ENGINEERING
4316 NORTH ELSTON AVENUE
CHICAGO, ILLINOIS 60641

CHICAGO DEPARTMENT OF TRANSPORTATION
DIVISION OF ENGINEERING

STATE / LAKE LOOP ELEVATED STATION
200 NORTH STATE STREET, CHICAGO, IL 60601

SPEC. NO.

PROPOSED BACKBONE COMMUNICATION PLAN

DRAWING NO. T-112

CDOT PROJECT D-1-209

DATE: 9/9/2022

REVISION NO.

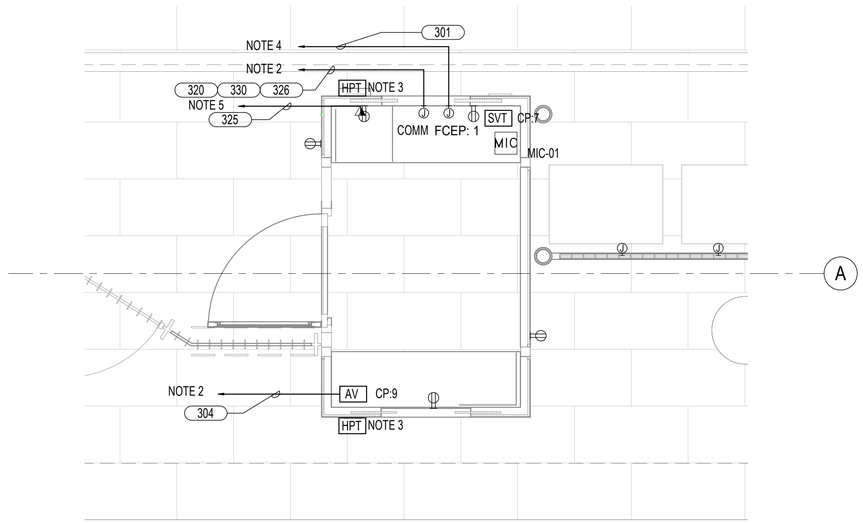

1 NORTH CAK COMMUNICATIONS ENLARGED PLAN

1/2" = 1'-0"

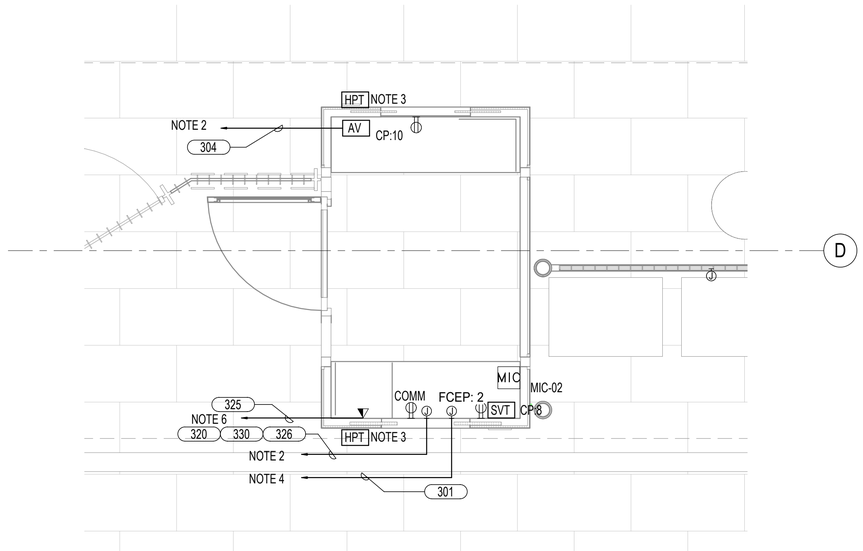

2 SOUTH CAK COMMUNICATIONS ENLARGED PLAN

1/2" = 1'-0"

NOTES:

1. SEE DRAWING T-001 FOR COMMUNICATIONS SYMBOL LIST, GENERAL NOTES AND ABBREVIATIONS.
2. TO MAIN COMMUNICATIONS ROOM.
3. BLUE LIGHT MOUNTED ABOVE ON FACE OF WALL PANEL ABOVE ROOF. REFER TO ARCHITECTURAL PLANS FOR EXACT LOCATION AND MOUNTING.
4. TO MAIN ELECTRICAL ROOM.
5. TO COMMUNICATIONS NW HUB-1.
6. TO COMMUNICATIONS SW HUB-3.
7. REFER TO CABLE/CONDUIT SCHEDULE ON DWG E-611.
8. REFER TO E-615 TO E6-18 FOR PANEL SCHEDULES.

DESIGN BY:										
DRAWN BY:										
CHECKED BY:										
APPROVED BY:		4	7/3/2023	ISSUED FOR BID	JM	SRM	SM			
CDOT/APPROVED BY:		NO.	DATE	REVISIONS	DES.	DRW.	CHK.	DCCO	CDOT	

TRANSYSTEMS
222 SOUTH RIVERSIDE PLAZA SUITE 610
CHICAGO, ILLINOIS 60606

SKIDMORE, OWINGS & MERRILL LLP
224 SOUTH MICHIGAN AVENUE, SUITE 1000
CHICAGO, ILLINOIS 60604

FACET ENGINEERING
4316 NORTH ELSTON AVENUE
CHICAGO, ILLINOIS 60641

CHICAGO DEPARTMENT OF TRANSPORTATION
DIVISION OF ENGINEERING

STATE / LAKE LOOP ELEVATED STATION
200 NORTH STATE STREET, CHICAGO, IL 60601

ENLARGED PLAN - NORTH AND SOUTH CUSTOMER ASSIST KIOSKS

CDOT PROJECT D-1-209

DATE: 9/9/2022

SPEC. NO.

DRAWING NO. T-400

REVISION NO.

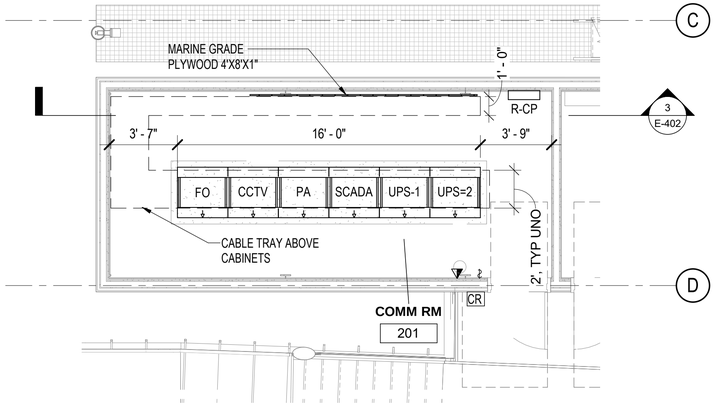

1 MAIN COMMUNICATIONS ROOM

1/4" = 1'-0"

NOTES:

1. SEE DRAWING T-001 FOR COMMUNICATIONS SYMBOL LIST, GENERAL NOTES AND ABBREVIATIONS.
2. REFER TO DWG T-601 FOR PUBLIC ADDRESS CONDUIT AND WIRING REQUIREMENTS.
3. REFER TO DWG T-602 FOR TELEPHONE SYSTEM CONDUIT AND WIRING REQUIREMENTS.
4. REFER TO DWG T-603 FOR CCTV SYSTEM CONDUIT AND WIRING REQUIREMENTS.
5. REFER TO DWG T-602 FOR TELEPHONE SYSTEM CONDUIT AND WIRING REQUIREMENTS.

DESIGN BY:										
DRAWN BY:										
CHECKED BY:										
APPROVED BY:		4	7/3/2023	ISSUED FOR BID	JM	EM	SM			
CDOT/APPROVED BY:		NO.	DATE	REVISIONS	DES.	DRW.	CHK.	DCCO	CDOT	

TRANSYSTEMS
222 SOUTH RIVERSIDE PLAZA SUITE 610
CHICAGO, ILLINOIS 60606

SKIDMORE, OWINGS & MERRILL LLP
224 SOUTH MICHIGAN AVENUE, SUITE 1000
CHICAGO, ILLINOIS 60604

FACET ENGINEERING
4316 NORTH ELSTON AVENUE
CHICAGO, ILLINOIS 60641

CHICAGO DEPARTMENT OF TRANSPORTATION
DIVISION OF ENGINEERING

STATE / LAKE LOOP ELEVATED STATION
200 NORTH STATE STREET, CHICAGO, IL 60601

SPEC. NO.

MAIN COMMUNICATIONS ROOM ENLARGED PLAN

DRAWING NO.
T-402

CDOT PROJECT D-1-209

DATE: 9/9/2022

REVISION NO.

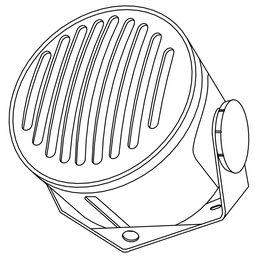

NOTES:
1. TAMPER PROOF HARDWARE TO BE USED TO SECURE THE INSTALLATION OF ALL SPEAKER ASSEMBLIES.

TAMPER PROOF INTERNAL SPLINE HEAD SCREW

1 TYPE 1 SPEAKER ASSEMBLY
NTS

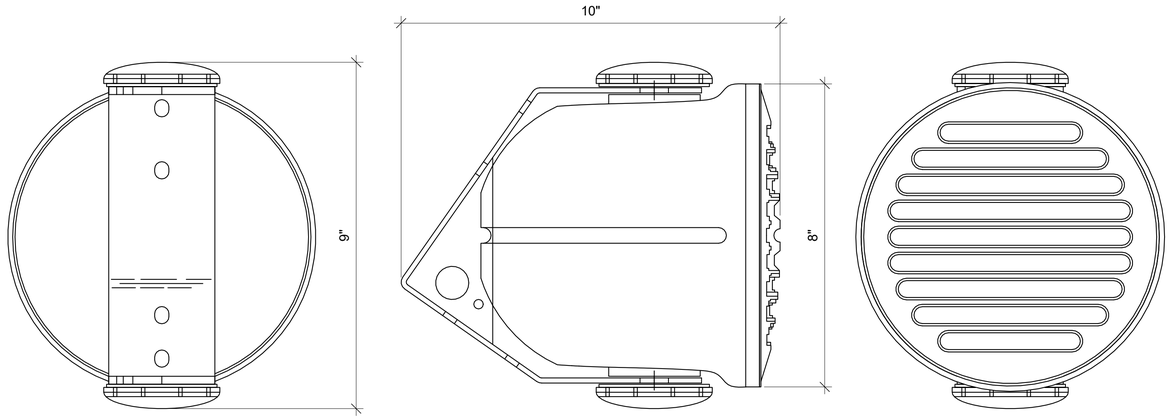

2 TYPE 1 SEALED CONE SPEAKER WITH STEEL SUPPORT BRACKET
NTS

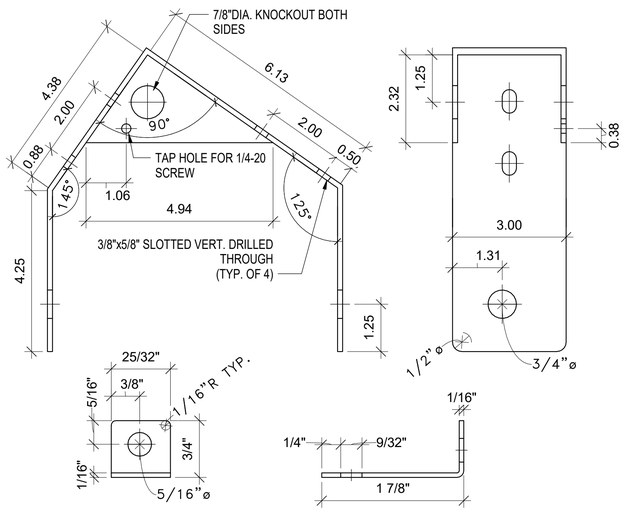

3 TYPE 1 SPEAKER STEEL SUPPORT BRACKET
NTS

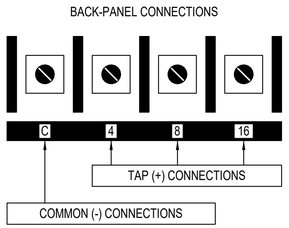

4 TYPE 1 SPEAKER TAP DETAIL
NTS

DESIGN BY:									
DRAWN BY:									
CHECKED BY:									
APPROVED BY:		4	7/3/2023	ISSUED FOR BID	JM	EM	OS		
CDOT/APPROVED BY:		NO.	DATE	REVISIONS	DES.	DRW.	CHK.	DCCO	CDOT

TRANSYSTEMS
222 SOUTH RIVERSIDE PLAZA SUITE 610
CHICAGO, ILLINOIS 60606

SKIDMORE, OWINGS & MERRILL LLP
224 SOUTH MICHIGAN AVENUE, SUITE 1000
CHICAGO, ILLINOIS 60604

FACET ENGINEERING
4316 NORTH ELSTON AVENUE
CHICAGO, ILLINOIS 60641

CHICAGO DEPARTMENT OF TRANSPORTATION
DIVISION OF ENGINEERING

STATE / LAKE LOOP ELEVATED STATION
200 NORTH STATE STREET, CHICAGO, IL 60601

DETAILS - TYPE 1 SPEAKER

CDOT PROJECT D-1-209

DATE: 9/9/2022

SPEC. NO.

DRAWING NO. T-501

REVISION NO.

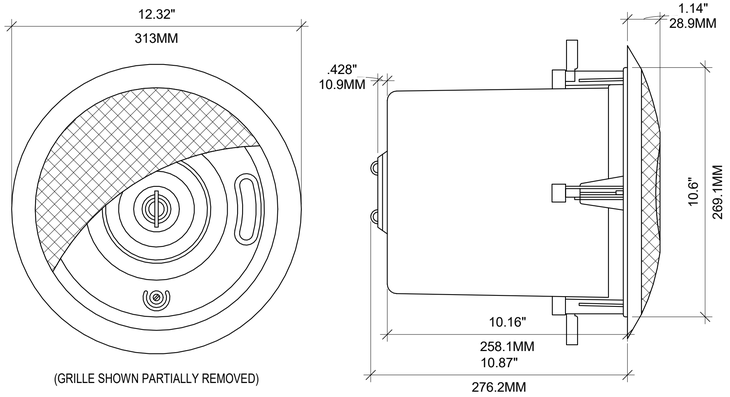

(GRILLE SHOWN PARTIALLY REMOVED)

1 TYPE 2 CEILING SPEAKER RECESSED MOUNT
NTS

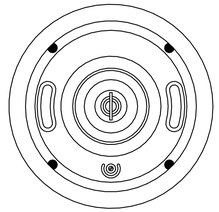

OCS1 FRONT DRAWING (GRILLE REMOVED)

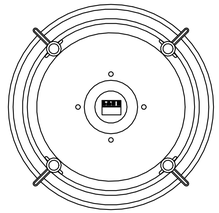

OCS1 REAR DRAWING

2 TYPE 2 SPEAKER DETAIL
NTS

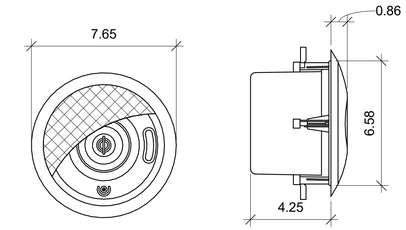

(GRILLE SHOWN PARTIALLY REMOVED)

3 TYPE 2A 4" CEILING SPEAKER RECESSED MOUNT
NTS

NOTES:

1. TAMPERPROOF HARDWARE TO BE USED TO SECURE THE INSTALLATION OF ALL TYPE 2 AND TYPE 2A SPEAKER ASSEMBLIES.

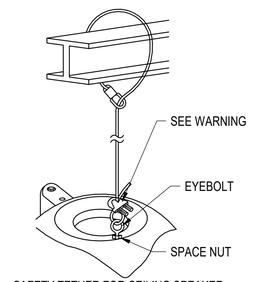

SAFETY TETHER FOR CEILING SPEAKER

4 SAFETY TETHER DETAIL
NTS

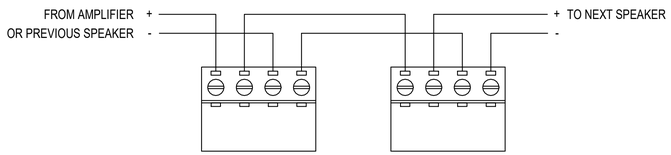

5 TYPE 2 SPEAKER CONNECTION
NTS

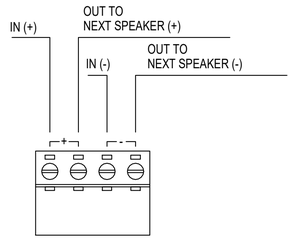

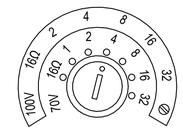

6 TYPE 2 SPEAKER TAP
NTS

DESIGN BY:										
DRAWN BY:										
CHECKED BY:										
APPROVED BY:		4	7/3/2023	ISSUED FOR BID	JM	EM	OS			
CDOT/APPROVED BY:		NO.	DATE	REVISIONS	DES.	DRW.	CHK.	DCCO	CDOT	

TRANSYSTEMS
222 SOUTH RIVERSIDE PLAZA SUITE 610
CHICAGO, ILLINOIS 60606

SKIDMORE, OWINGS & MERRILL LLP
224 SOUTH MICHIGAN AVENUE, SUITE 1000
CHICAGO, ILLINOIS 60604

FACET ENGINEERING
4316 NORTH ELSTON AVENUE
CHICAGO, ILLINOIS 60641

CHICAGO DEPARTMENT OF TRANSPORTATION
DIVISION OF ENGINEERING

STATE / LAKE LOOP ELEVATED STATION
200 NORTH STATE STREET, CHICAGO, IL 60601

DETAILS - TYPE 2 AND 2A SPEAKERS

CDOT PROJECT D-1-209 | DATE: 9/9/2022

SPEC. NO.

DRAWING NO. T-502

REVISION NO.

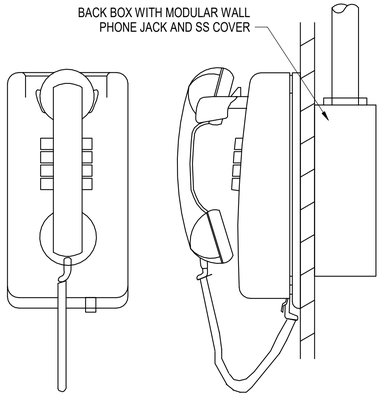

FRONT VIEW SIDE VIEW

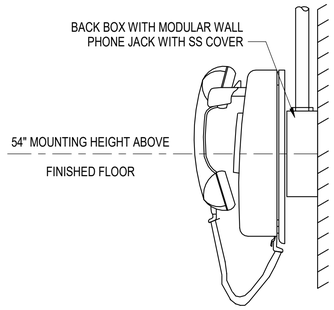

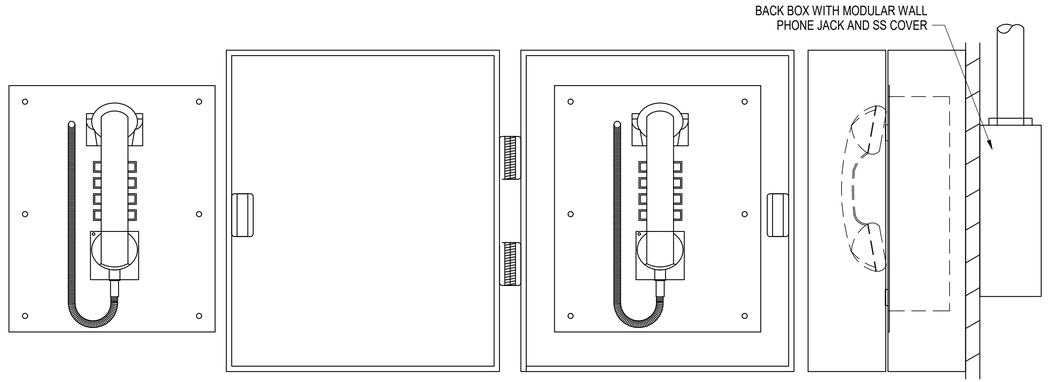

FRONT VIEW FRONT VIEW WITH FRONT PANEL (OPEN) SIDE VIEW

1 TYPE 1 INDOOR TELEPHONE
NTS

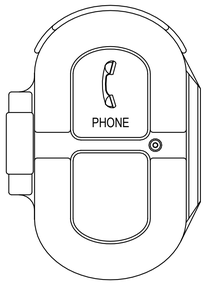

FRONT VIEW

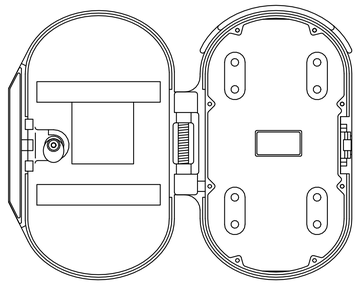

OPEN

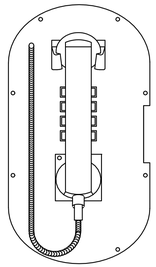

FRONT PANEL

2 TYPE 1 TELEPHONE INSTALLATION
NTS

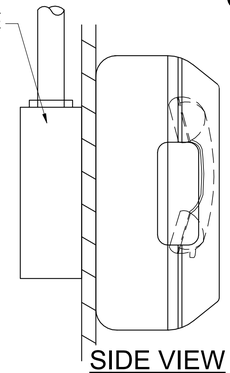

SIDE VIEW

3 TYPE 5 FARE AREA TELEPHONE
NTS

4 TYPE 2 OUTDOOR TELEPHONE
NTS

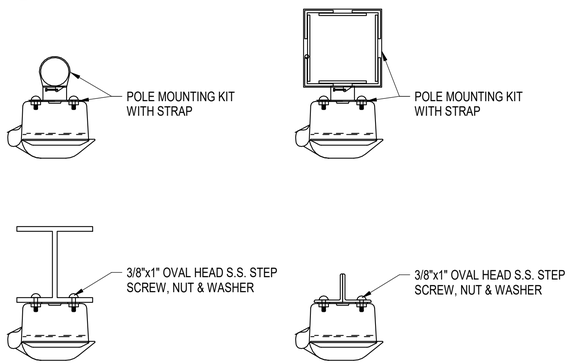

5 TYPE 2 TELEPHONE INSTALLATION
NTS

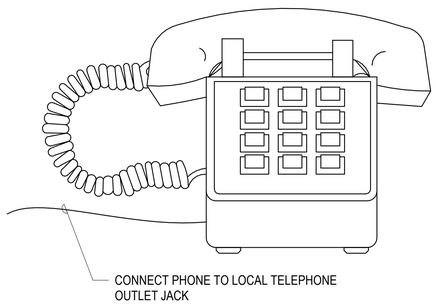

6 TYPE 3 INDOOR TELEPHONE
NTS

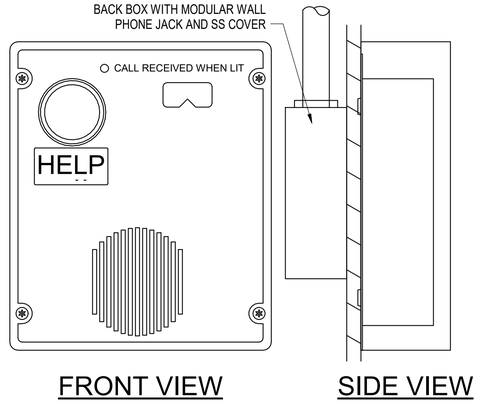

FRONT VIEW SIDE VIEW

7 TYPE 4 HELP POINT TELEPHONE
NTS

8 TYPE 4 TELEPHONE INSTALLATION
NTS

DESIGN BY:										
DRAWN BY:										
CHECKED BY:										
APPROVED BY:		4	7/3/2023	ISSUED FOR BID	JM	EM	OS			
CDOT/APPROVED BY:		NO.	DATE	REVISIONS	DES.	DRW.	CHK.	DCCO	CDOT	

TRANSYSTEMS
222 SOUTH RIVERSIDE PLAZA SUITE 610
CHICAGO, ILLINOIS 60606

SKIDMORE, OWINGS & MERRILL LLP
224 SOUTH MICHIGAN AVENUE, SUITE 1000
CHICAGO, ILLINOIS 60604

FACET ENGINEERING
4316 NORTH ELSTON AVENUE
CHICAGO, ILLINOIS 60641

CHICAGO DEPARTMENT
OF TRANSPORTATION
DIVISION OF ENGINEERING

STATE / LAKE LOOP ELEVATED STATION
200 NORTH STATE STREET, CHICAGO, IL 60601

SPEC. NO.

DETAILS - TELEPHONES

DRAWING NO.
T-503

CDOT PROJECT D-1-209

DATE: 9/9/2022

REVISION NO.

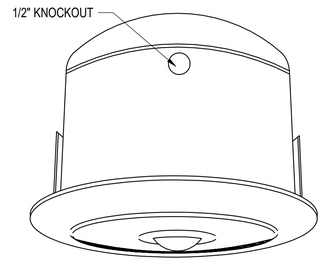

1 360 DEGREE CAMERA - ELEVATOR AND CAK
NTS

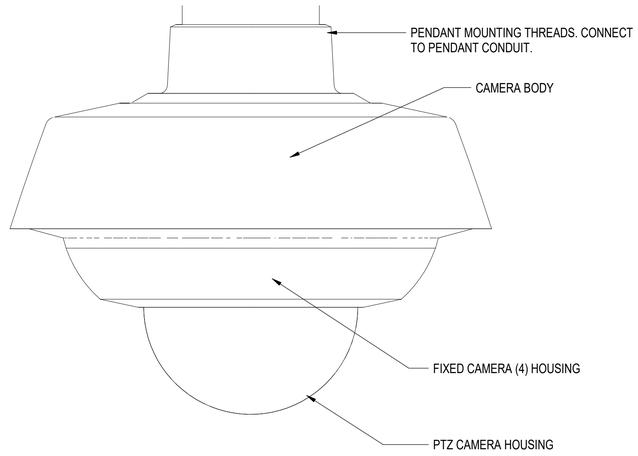

2 PTZ CAMERA - PENDANT MOUNT
NTS

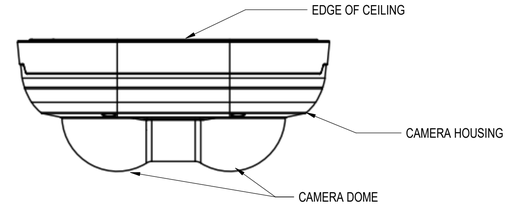

5 DUAL IMAGE CAMERA
NTS

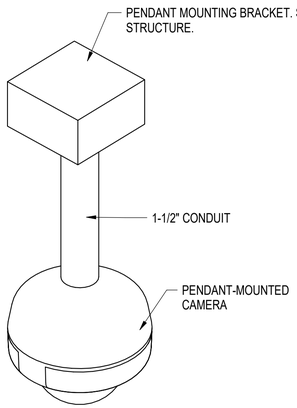

4 CAMERA - PENDANT DETAIL
NTS

DESIGN BY:										
DRAWN BY:										
CHECKED BY:										
APPROVED BY:		4	7/3/2023	ISSUED FOR BID	JM	EM	OS			
CDOT/APPROVED BY:		NO.	DATE	REVISIONS	DES.	DRW.	CHK.	DCCO	CDOT	

TRANSYSTEMS
222 SOUTH RIVERSIDE PLAZA SUITE 610
CHICAGO, ILLINOIS 60606

SKIDMORE, OWINGS & MERRILL LLP
224 SOUTH MICHIGAN AVENUE, SUITE 1000
CHICAGO, ILLINOIS 60604

FACET ENGINEERING
4316 NORTH ELSTON AVENUE
CHICAGO, ILLINOIS 60641

CHICAGO DEPARTMENT OF TRANSPORTATION
DIVISION OF ENGINEERING

STATE / LAKE LOOP ELEVATED STATION
200 NORTH STATE STREET, CHICAGO, IL 60601

DETAILS - CCTV CAMERAS

CDOT PROJECT D-1-209

DATE: 9/9/2022

SPEC. NO.

DRAWING NO. T-504

REVISION NO.

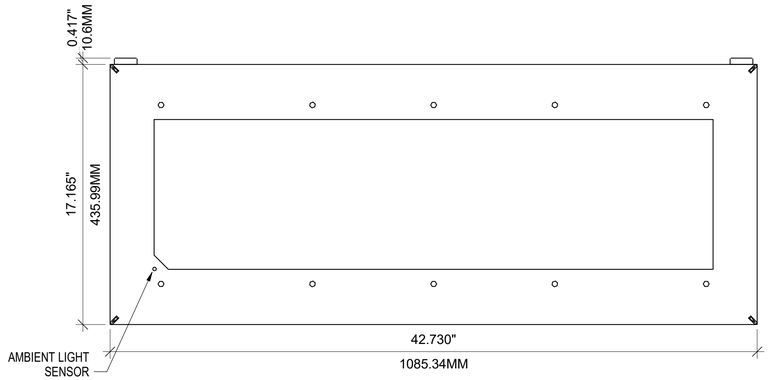

FRONT VIEW

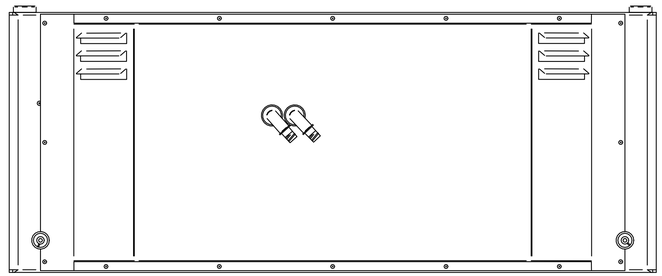

BACK VIEW

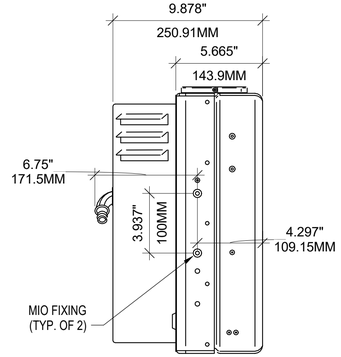

SIDE VIEW

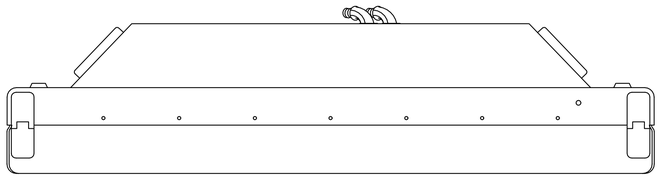

TOP VIEW

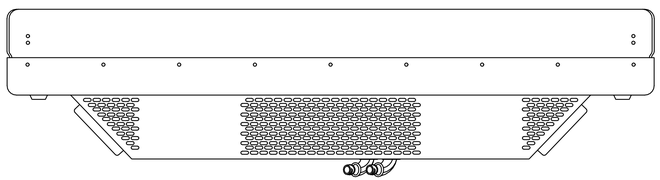

BOTTOM VIEW

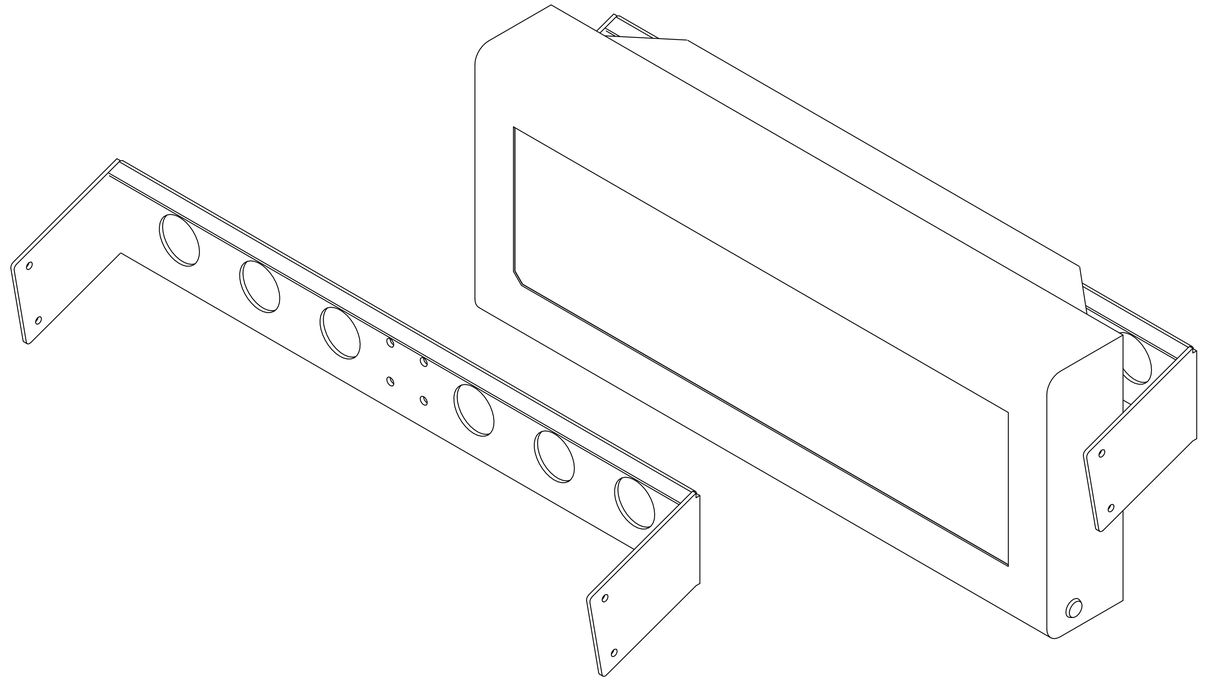

DMS BRACKET - ISOMETRIC VIEW

NOTES:

1. REFER TO ARCHITECTURAL GRAPHICS DRAWINGS FOR MOUNTING DETAILS.

1 DYNAMIC MESSAGE SIGN - PLATFORM
NTS

DESIGN BY:										
DRAWN BY:										
CHECKED BY:										
APPROVED BY:		4	7/3/2023	ISSUED FOR BID	JM	EM	OS			
CDOT/APPROVED BY:		NO.	DATE	REVISIONS	DES.	DRW.	CHK.	DCCO	CDOT	

TRANSYSTEMS
222 SOUTH RIVERSIDE PLAZA SUITE 610
CHICAGO, ILLINOIS 60606

SKIDMORE, OWINGS & MERRILL LLP
224 SOUTH MICHIGAN AVENUE, SUITE 1000
CHICAGO, ILLINOIS 60604

FACET ENGINEERING
4316 NORTH ELSTON AVENUE
CHICAGO, ILLINOIS 60641

CHICAGO DEPARTMENT OF TRANSPORTATION
DIVISION OF ENGINEERING

STATE / LAKE LOOP ELEVATED STATION
200 NORTH STATE STREET, CHICAGO, IL 60601

SPEC. NO.

DETAILS - DYNAMIC MESSAGE SIGN (DMS) - PLATFORM

DRAWING NO.
T-505

CDOT PROJECT D-1-209

DATE: 9/9/2022

REVISION NO.

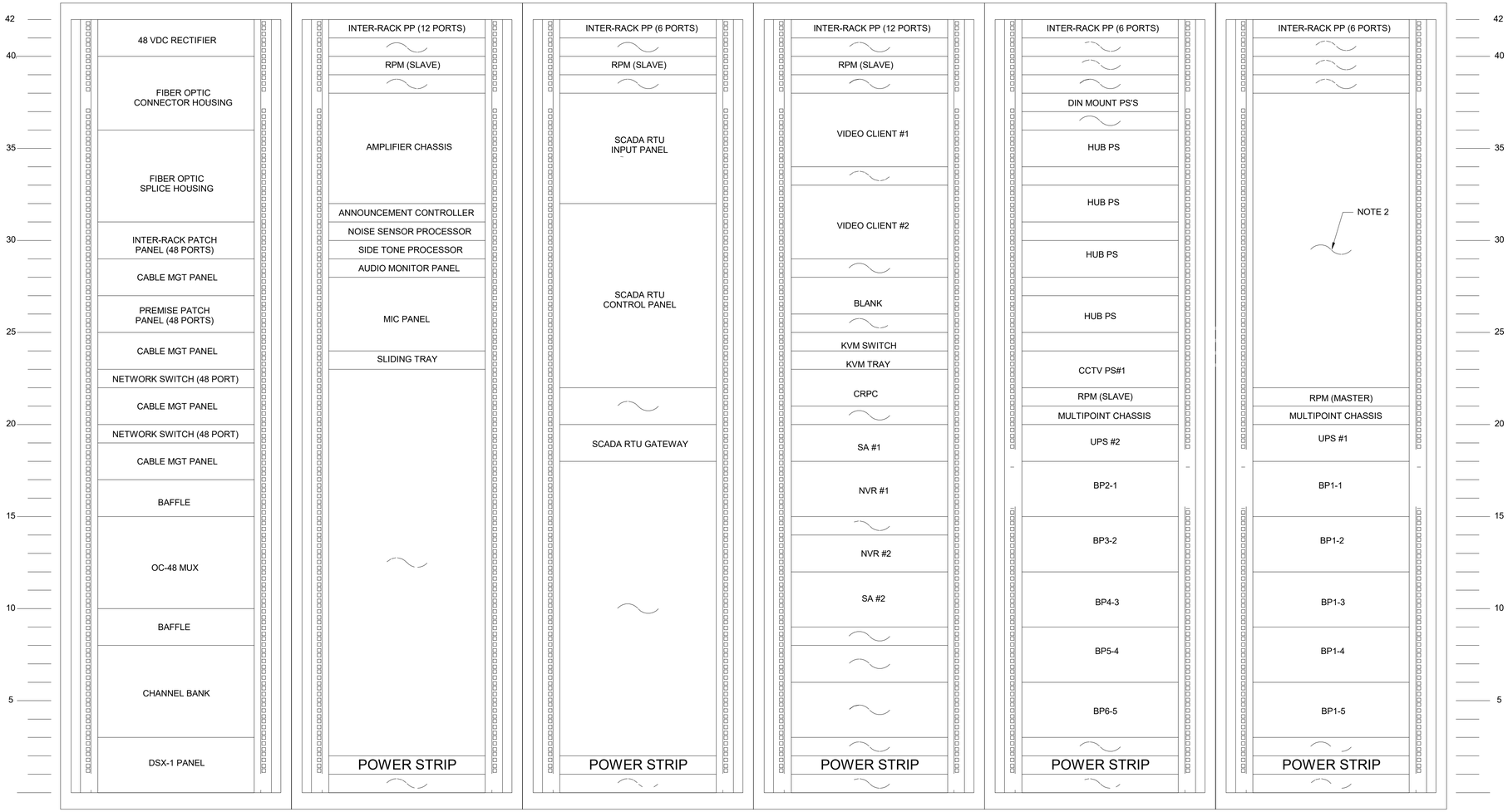

NOTES:

1. SEE DRAWINGS T-507 THROUGH T-509 FOR ADDITIONAL REQUIREMENTS.
2. BLANK, TYPICAL.

1 CABINET ELEVATION DETAIL

NTS

DESIGN BY:										
DRAWN BY:										
CHECKED BY:										
APPROVED BY:		4	7/3/2023	ISSUED FOR BID	JM	SRM	SM			
CDOT/APPROVED BY:		NO.	DATE	REVISIONS	DES.	DRW.	CHK.	DCCO	CDOT	

TRANSYSTEMS
222 SOUTH RIVERSIDE PLAZA SUITE 610
CHICAGO, ILLINOIS 60606

SKIDMORE, OWINGS & MERRILL LLP
224 SOUTH MICHIGAN AVENUE, SUITE 1000
CHICAGO, ILLINOIS 60604

FACET ENGINEERING
4316 NORTH ELSTON AVENUE
CHICAGO, ILLINOIS 60641

CHICAGO DEPARTMENT OF TRANSPORTATION
DIVISION OF ENGINEERING

STATE / LAKE LOOP ELEVATED STATION
200 NORTH STATE STREET, CHICAGO, IL 60601

SPEC. NO.

DETAILS - MAIN COMMUNICATIONS CABINET - ELEVATION

DRAWING NO. T-506

CDOT PROJECT D-1-209

DATE: 9/9/2022

REVISION NO.

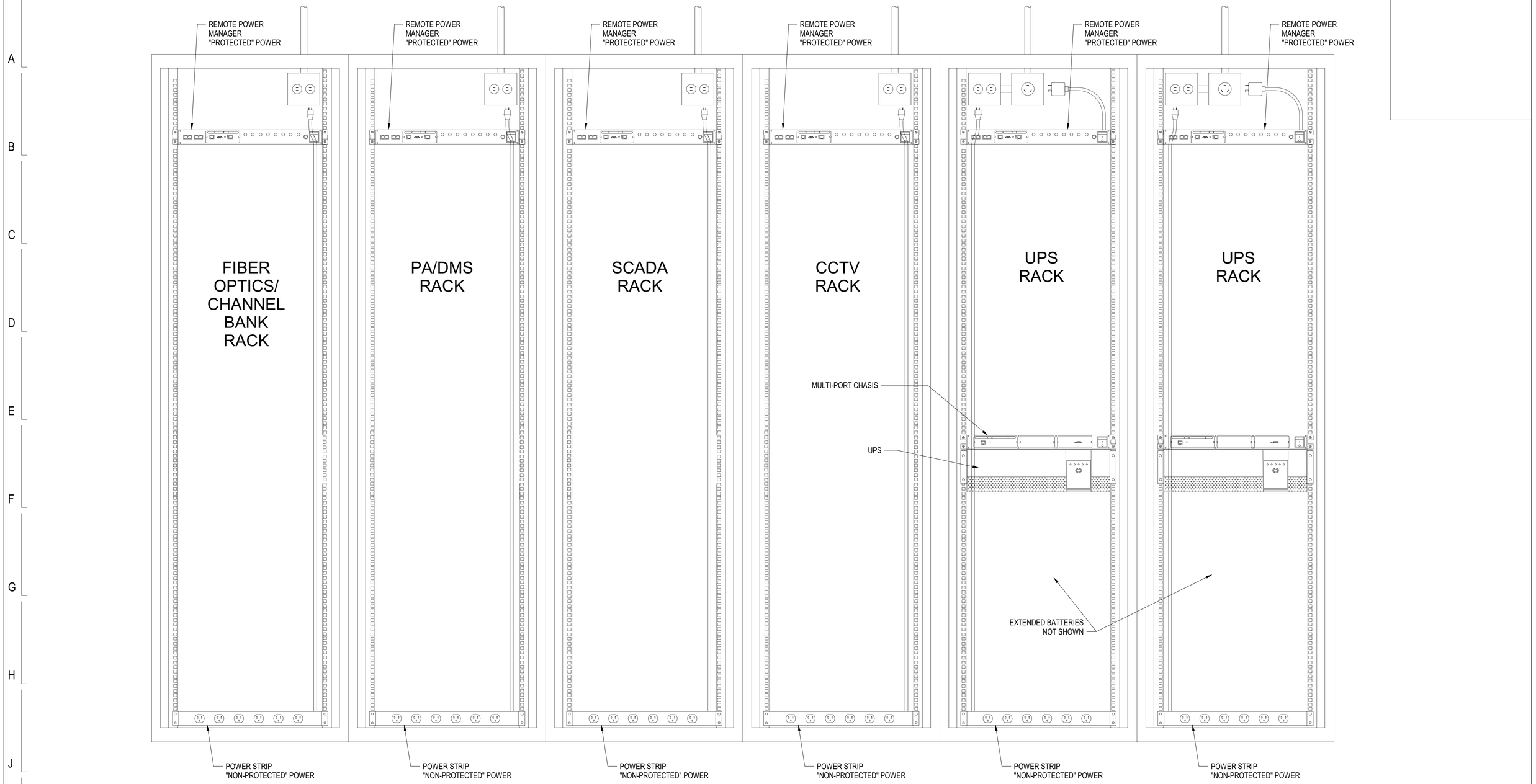

1 CABINET POWER DISTRIBUTION
NTS

DESIGN BY:										
DRAWN BY:										
CHECKED BY:										
APPROVED BY:		4	7/3/2023	ISSUED FOR BID	JM	EM	OS			
CDOT/APPROVED BY:		NO.	DATE	REVISIONS	DES.	DRW.	CHK.	DCCO	CDOT	

TRANSYSTEMS
222 SOUTH RIVERSIDE PLAZA SUITE 610
CHICAGO, ILLINOIS 60606

SKIDMORE, OWINGS & MERRILL LLP
224 SOUTH MICHIGAN AVENUE, SUITE 1000
CHICAGO, ILLINOIS 60604

FACET ENGINEERING
4316 NORTH ELSTON AVENUE
CHICAGO, ILLINOIS 60641

CHICAGO DEPARTMENT OF TRANSPORTATION
DIVISION OF ENGINEERING

STATE / LAKE LOOP ELEVATED STATION
200 NORTH STATE STREET, CHICAGO, IL 60601

SPEC. NO.

DETAILS - MAIN COMMUNICATIONS CABINET - POWER

DRAWING NO. T-507

CDOT PROJECT D-1-209 | DATE: 9/9/2022 | REVISION NO.

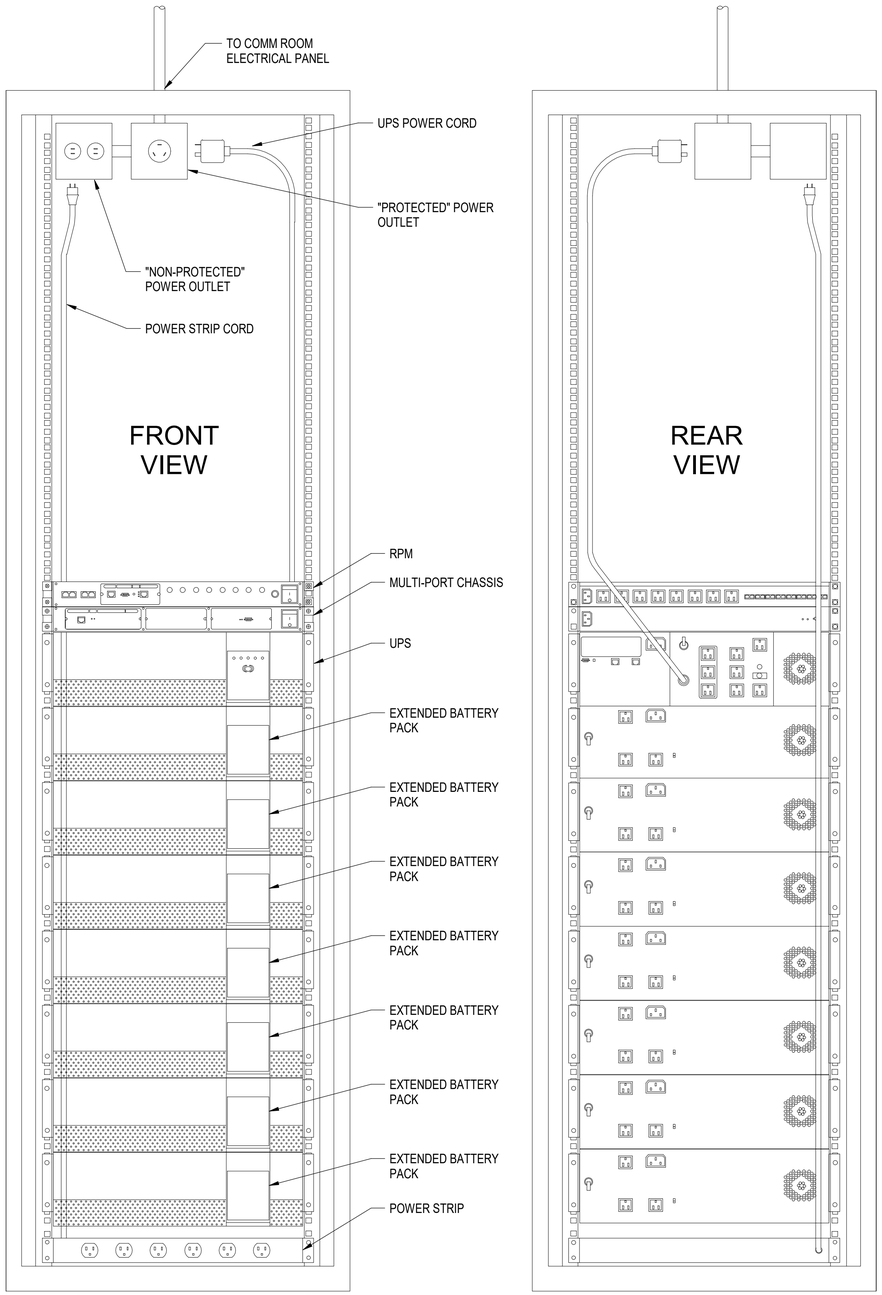

1 UPS CABINET ELEVATION VIEW
NTS

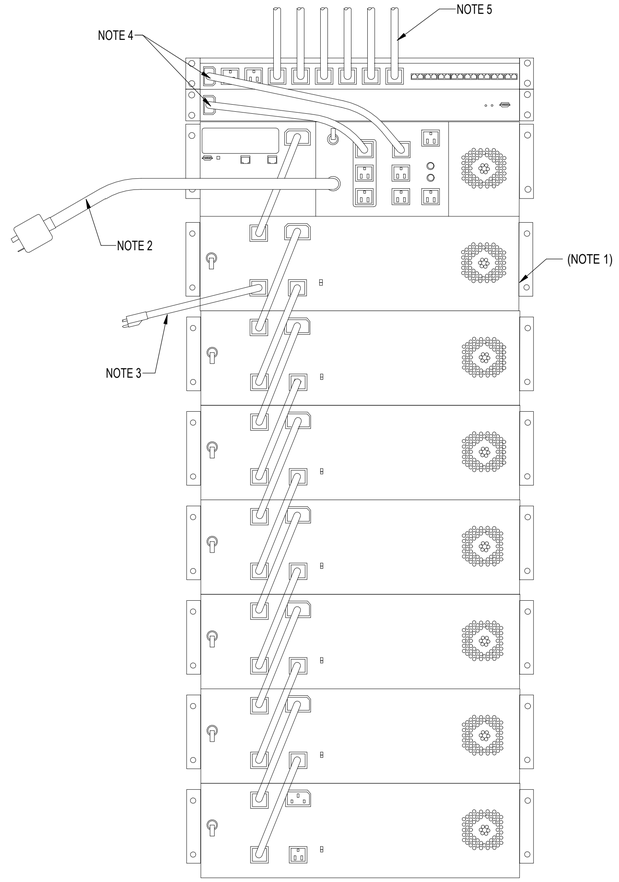

2 UPS POWER CONNECTIONS REAR VIEW
NTS

NOTES:

1. EXTENDED BATTERY, TYPICAL
2. UPS POWER SUPPLY TO 120V PROTECTED CIRCUIT.
3. CHARGING CIRCUIT TO 120V UNPROTECTED CIRCUIT.
4. AC POWER TO RPM AND MULTI-PORT CHASSIS.
5. TO PROTECTED POWER STRIPS IN CABINET.

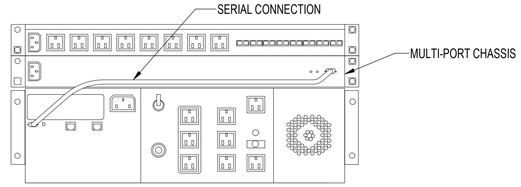

3 UPS COMMUNICATION CONNECTIONS REAR VIEW
NTS

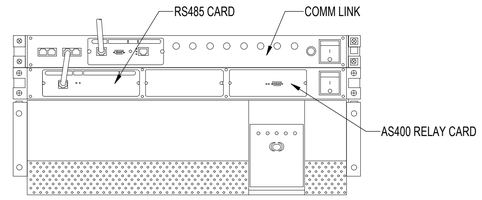

4 UPS COMMUNICATION CONNECTIONS FRONT VIEW
NTS

DESIGN BY:										
DRAWN BY:										
CHECKED BY:										
APPROVED BY:		4	7/3/2023	ISSUED FOR BID	Designe	Author	Checker			
CDOT/APPROVED BY:		NO.	DATE	REVISIONS	DES.	DRW.	CHK.	DCCO	CDOT	

TRANSYSTEMS
222 SOUTH RIVERSIDE PLAZA SUITE 610
CHICAGO, ILLINOIS 60606

SKIDMORE, OWINGS & MERRILL LLP
224 SOUTH MICHIGAN AVENUE, SUITE 1000
CHICAGO, ILLINOIS 60604

FACET ENGINEERING
4316 NORTH ELSTON AVENUE
CHICAGO, ILLINOIS 60641

CHICAGO DEPARTMENT OF TRANSPORTATION
DIVISION OF ENGINEERING

STATE / LAKE LOOP ELEVATED STATION
200 NORTH STATE STREET, CHICAGO, IL 60601

SPEC. NO.

DETAILS - MAIN COMMUNICATIONS CABINET - UPS

DRAWING NO. T-508

CDOT PROJECT D-1-209

DATE: 9/9/2022

REVISION NO.

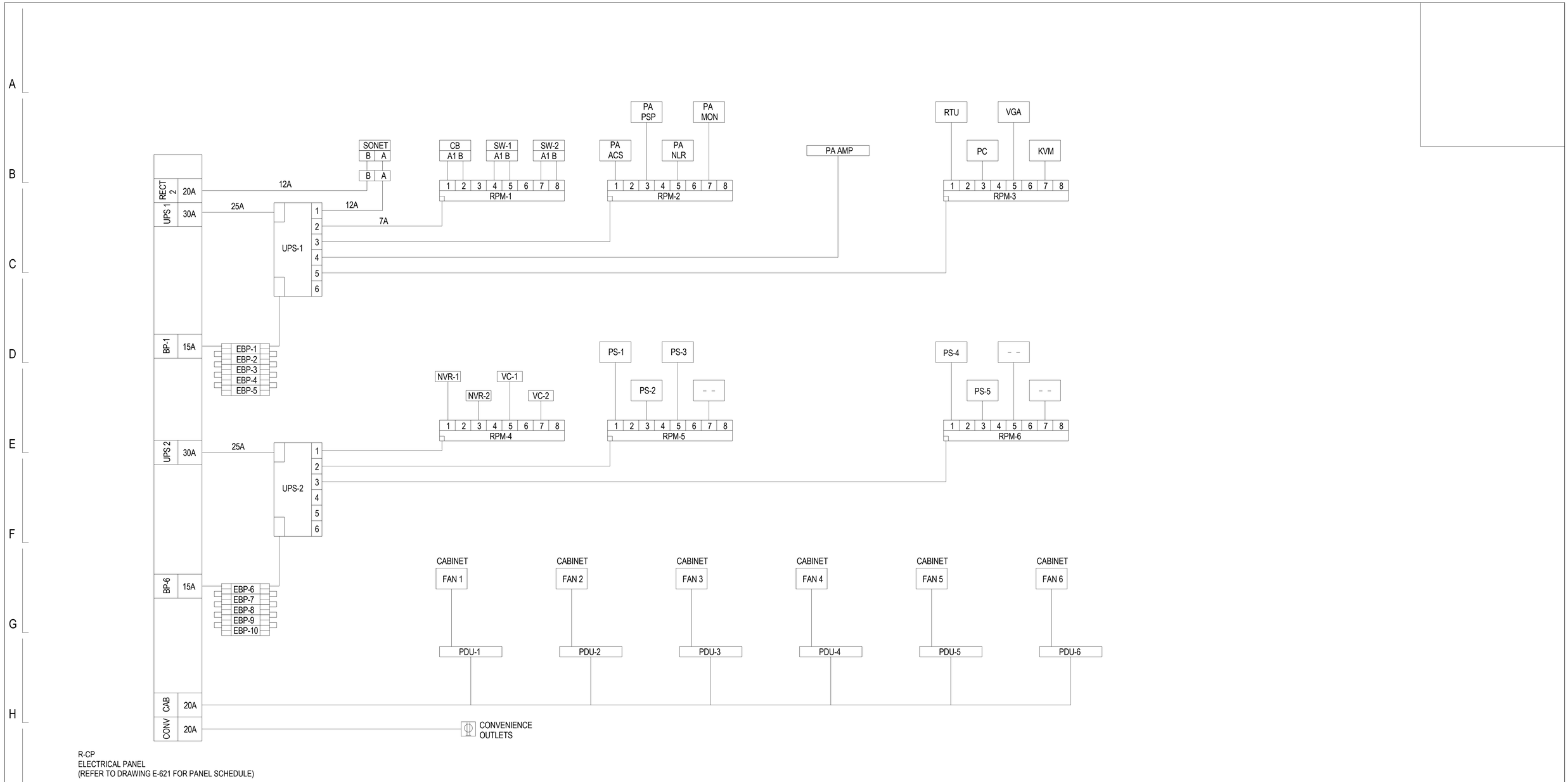

R-CP
ELECTRICAL PANEL
(REFER TO DRAWING E-621 FOR PANEL SCHEDULE)

1 COMMUNICATIONS CABINET POWER DIAGRAM

NTS

DESIGN BY:									
DRAWN BY:									
CHECKED BY:									
APPROVED BY:		4	7/3/2023	ISSUED FOR BID	JM	SRM	SM		
CDOT/APPROVED BY:		NO.	DATE	REVISIONS	DES.	DRW.	CHK.	DCCO	CDOT

TRANSYSTEMS
222 SOUTH RIVERSIDE PLAZA SUITE 610
CHICAGO, ILLINOIS 60606

SKIDMORE, OWINGS & MERRILL LLP
224 SOUTH MICHIGAN AVENUE, SUITE 1000
CHICAGO, ILLINOIS 60604

FACET ENGINEERING
4316 NORTH ELSTON AVENUE
CHICAGO, ILLINOIS 60641

CHICAGO DEPARTMENT OF TRANSPORTATION
DIVISION OF ENGINEERING

STATE / LAKE LOOP ELEVATED STATION
200 NORTH STATE STREET, CHICAGO, IL 60601

DETAILS - MAIN COMMUNICATIONS CABINET - POWER ONE LINE

CDOT PROJECT D-1-209

DATE: 9/9/2022

SPEC. NO.

DRAWING NO. T-509

REVISION NO.

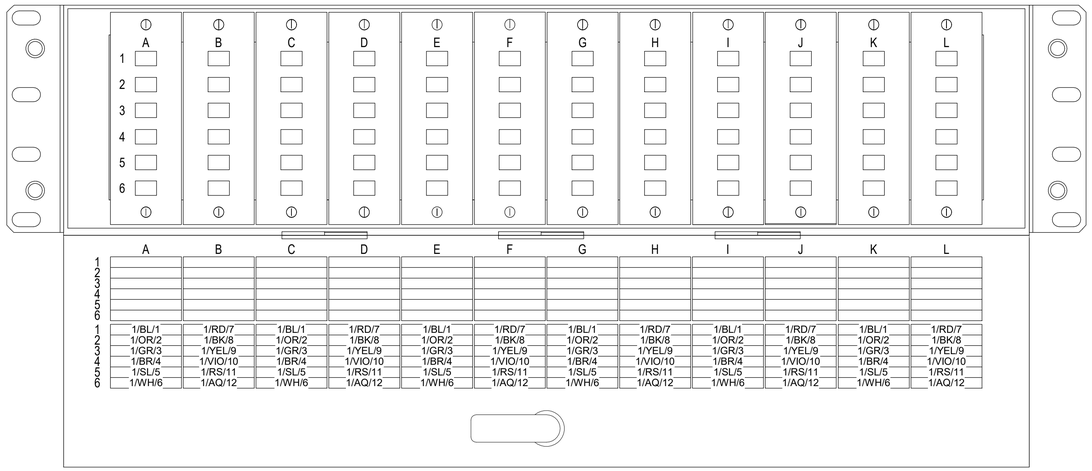

FIBER DISTRUBUTION PANEL (FDP)

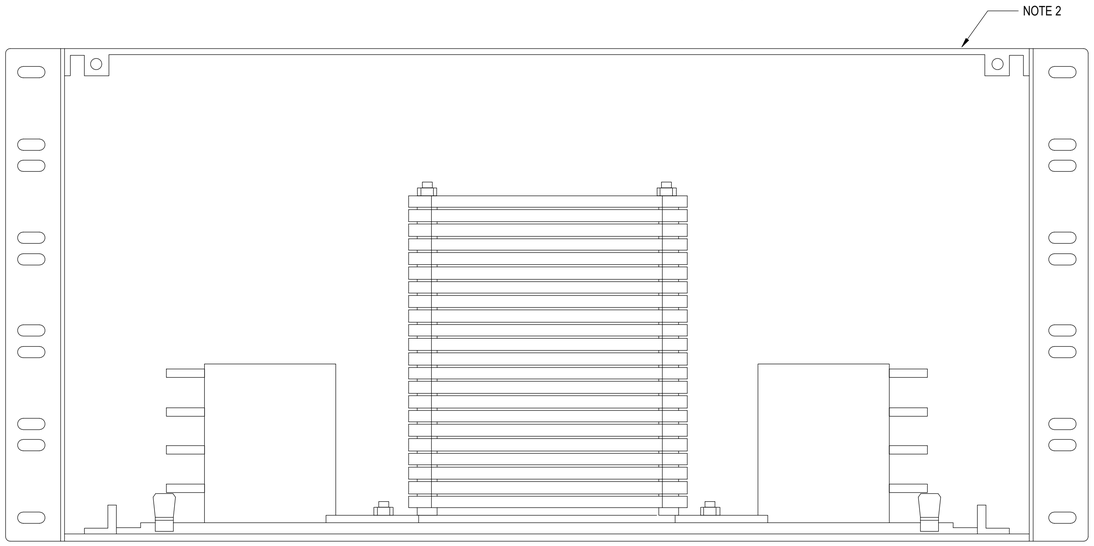

FIBER SPLICE HOUSING

1 FIBER DISTRIBUTION PANEL AND SPLICE HOUSING DETAILS
NTS

NO.	DATE	REVISIONS	DES.	DRW.	CHK.	DCCO	CDOT
4	7/3/2023	ISSUED FOR BID	JM	SRM	SM		

DESIGN BY:
DRAWN BY:
CHECKED BY:
APPROVED BY:
CDOT/APPROVED BY:

TRANSYSTEMS
222 SOUTH RIVERSIDE PLAZA SUITE 610
CHICAGO, ILLINOIS 60606

SKIDMORE, OWINGS & MERRILL LLP
224 SOUTH MICHIGAN AVENUE, SUITE 1000
CHICAGO, ILLINOIS 60604

FACET ENGINEERING
4316 NORTH ELSTON AVENUE
CHICAGO, ILLINOIS 60641

CHICAGO DEPARTMENT OF TRANSPORTATION
DIVISION OF ENGINEERING

STATE / LAKE LOOP ELEVATED STATION
200 NORTH STATE STREET, CHICAGO, IL 60601

DETAILS - MAIN COMMUNICATIONS CABINET - FIBER SPLICE AND FDP

CDOT PROJECT D-1-209 | DATE: 9/9/2022

SPEC. NO.

DRAWING NO. T-510

REVISION NO.

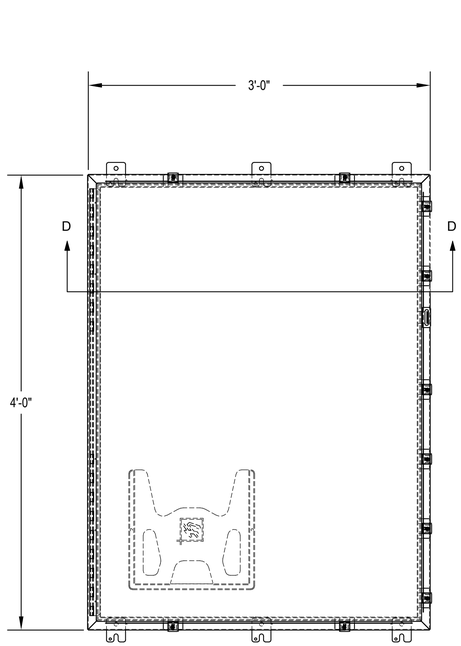

A - FRONT VIEW

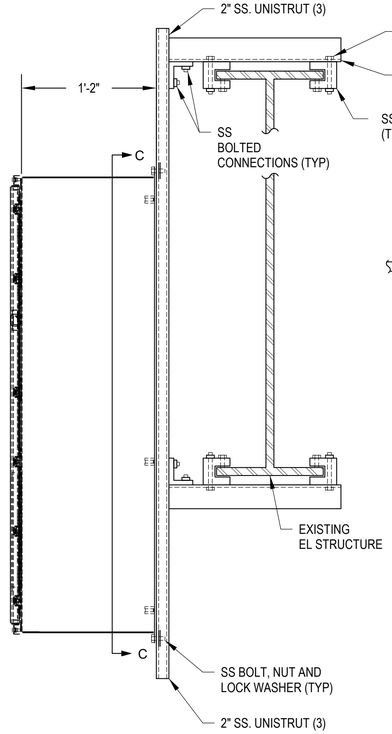

B - SIDE VIEW

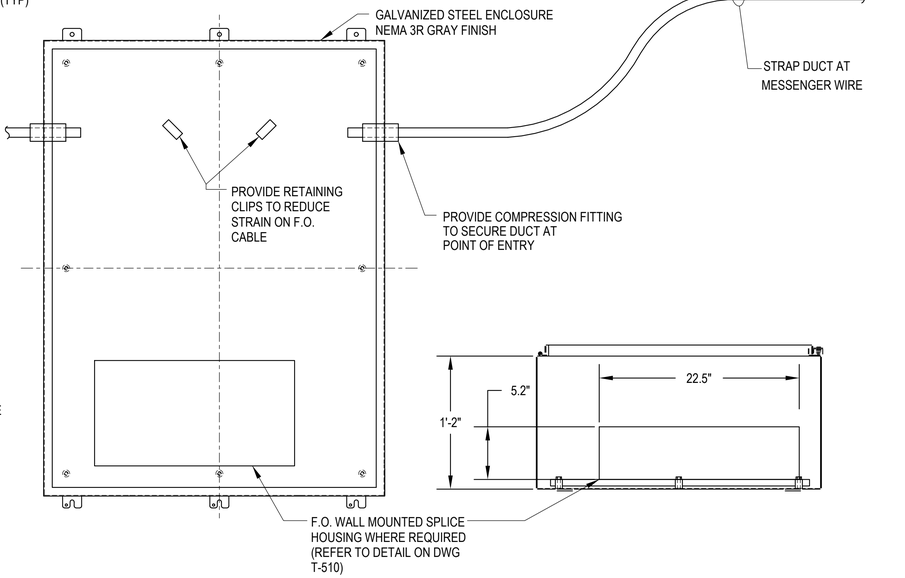

C - INSIDE VIEW

D - TOP VIEW

1 36" X 48" FIBER SLACK ENCLOSURE
NTS

DESIGN BY:									
DRAWN BY:									
CHECKED BY:									
APPROVED BY:		4	7/3/2023	ISSUED FOR BID	JM	SRM	SM		
CDOT/APPROVED BY:		NO.	DATE	REVISIONS	DES.	DRW.	CHK.	DCCO	CDOT

TRANSYSTEMS
222 SOUTH RIVERSIDE PLAZA SUITE 610
CHICAGO, ILLINOIS 60606

SKIDMORE, OWINGS & MERRILL LLP
224 SOUTH MICHIGAN AVENUE, SUITE 1000
CHICAGO, ILLINOIS 60604

FACET ENGINEERING
4316 NORTH ELSTON AVENUE
CHICAGO, ILLINOIS 60641

CHICAGO DEPARTMENT OF TRANSPORTATION
DIVISION OF ENGINEERING

STATE / LAKE LOOP ELEVATED STATION
200 NORTH STATE STREET, CHICAGO, IL 60601

DETAILS - FIBER SLACK ENCLOSURE

CDOT PROJECT D-1-209 | DATE: 9/9/2022

SPEC. NO.

DRAWING NO. T-511

REVISION NO.

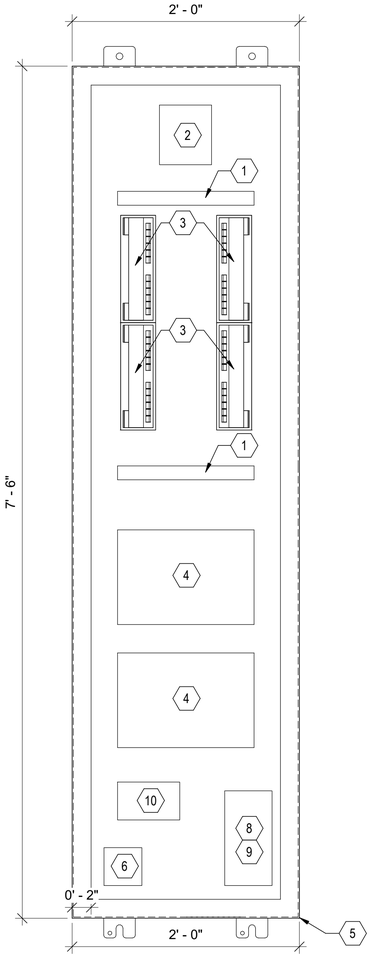

ITEM	MANUFACTURER	PART No.	DESCRIPTION	QUANTITY
1	TBD	TBD	TERMINAL BLOCK - 25PR TERMINALS	1
2	CORNING	LANSCAPE	FIBER OPTIC SPLICE ENCLOSURE	1
3	CORNING	TBD	6 PORT ETHERNET PATCH PANEL	4
4	ALTRONIX	TBD	8 PORT-10/100/1000 AND 2 PORT OPTICAL FIBER TYPE LC POE CAMERA CONTROLLER AND POWER SUPPLY	2
5	TBD	TBD	NEMA 4X, 90" H x 24" W x 15" D	1
6	TBD	TBD	NEMA 20-5R RECEPTACLE	3
7	TBD	TBD	TERMINAL BLOCK - 12 TERMINALS	1
8	TBD	TBD	DISCONNECT SWITCH WITH PILOT LIGHT (DUPLEX)	4
9	TBD	TBD	4-GANG OUTLET BOX ATTACHED TO SUBPANEL	1
10	TBD	TBD	HELP POINT TELEPHONE POWER SUPPLY	1

1 CTA TYPE 1 HUB CABINET
NTS

DESIGN BY:									
DRAWN BY:									
CHECKED BY:									
APPROVED BY:		4	7/3/2023	ISSUED FOR BID	JM	SRM	SM		
CDOT/APPROVED BY:		NO.	DATE	REVISIONS	DES.	DRW.	CHK.	DCCO	CDOT

TRANSYSTEMS
222 SOUTH RIVERSIDE PLAZA SUITE 610
CHICAGO, ILLINOIS 60606

SKIDMORE, OWINGS & MERRILL LLP
224 SOUTH MICHIGAN AVENUE, SUITE 1000
CHICAGO, ILLINOIS 60604

FACET ENGINEERING
4316 NORTH ELSTON AVENUE
CHICAGO, ILLINOIS 60641

CHICAGO DEPARTMENT OF TRANSPORTATION
DIVISION OF ENGINEERING

STATE / LAKE LOOP ELEVATED STATION
200 NORTH STATE STREET, CHICAGO, IL 60601

SPEC. NO.

DETAILS - HUB PANEL

DRAWING NO.
T-512

CDOT PROJECT D-1-209

DATE: 9/9/2022

REVISION NO.

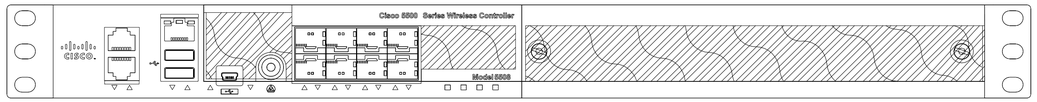

WIRELESS LAN CONTROLLER FRONT VIEW

ITEM	MANUFACTURER	PART No.	DESCRIPTION	QUANTITY
1	CISCO	5500	WIRELESS LAN CONTROLLER AND POWER SUPPLY	1
2	CISCO	1552E	CISCO WIRELESS ACCESS POINT, ANTENNAS, POLE OR WALL MOUNT BRACKET	1

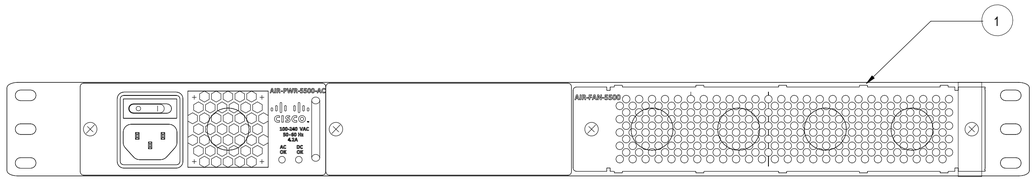

WIRELESS LAN CONTROLLER REAR VIEW

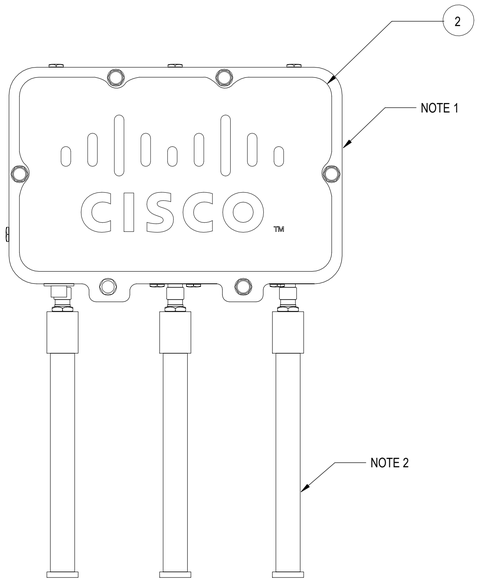

WIRELESS ACCESS POINT FRONT VIEW

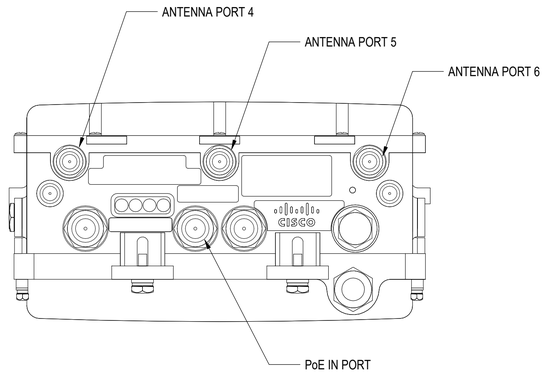

WIRELESS ACCESS POINT BOTTOM VIEW

DESIGN BY:									
DRAWN BY:									
CHECKED BY:									
APPROVED BY:		4	7/3/2023	ISSUED FOR BID	JM	SRM	SM		
CDOT/APPROVED BY:		NO.	DATE	REVISIONS	DES.	DRW.	CHK.	DCCO	CDOT

TRANSYSTEMS
222 SOUTH RIVERSIDE PLAZA SUITE 610
CHICAGO, ILLINOIS 60606

SKIDMORE, OWINGS & MERRILL LLP
224 SOUTH MICHIGAN AVENUE, SUITE 1000
CHICAGO, ILLINOIS 60604

FACET ENGINEERING
4316 NORTH ELSTON AVENUE
CHICAGO, ILLINOIS 60641

CHICAGO DEPARTMENT OF TRANSPORTATION
DIVISION OF ENGINEERING

STATE / LAKE LOOP ELEVATED STATION
200 NORTH STATE STREET, CHICAGO, IL 60601

DETAILS - WIRELESS ACCESS POINT

CDOT PROJECT D-1-209

DATE: 9/9/2022

SPEC. NO.

DRAWING NO. T-513

REVISION NO.

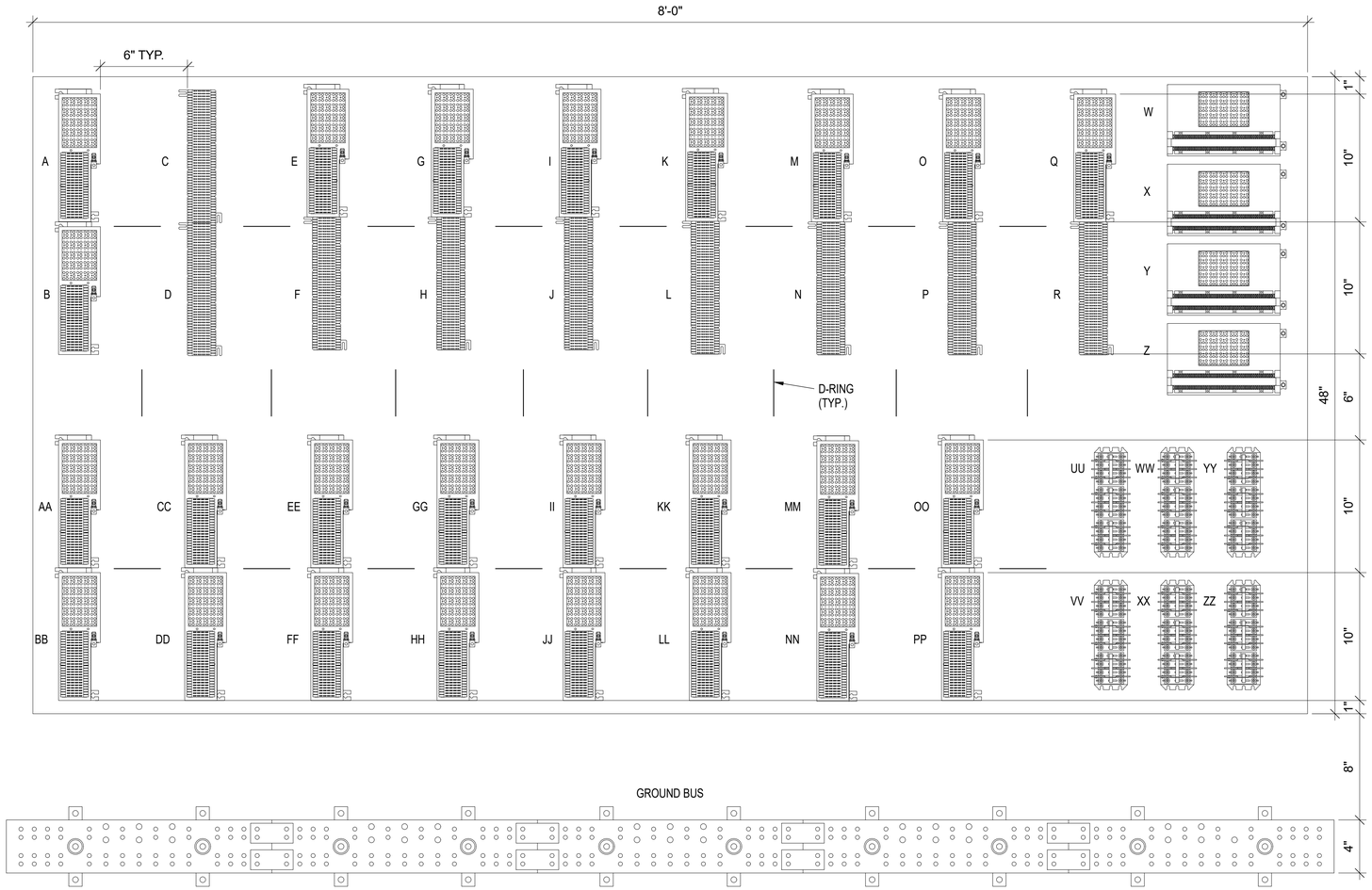

BLOCK ID	BLOCK TYPE	BLOCK ASSIGNMENT
A	Type 66-P/25 Cat-5e	HOUSE VOICE DROPS
B	Type 66-P/25 Cat-5e	HOUSE VOICE DROPS
C	Type 66-NP/25 Cat-5e	CHANNEL BANK (2W FXS)
D	Type 66-NP/25 Cat-5e	CHANNEL BANK (2W FXS)
E	Type 66-P/25 Cat-5e	SCADA STATION OUTPUT FUNCTIONS
F	Type 66-NP/25 Cat-5e	SCADA RTU CONTROL POINTS
G	Type 66-P/25 Cat-5e	SCADA LOCAL SENSORS (ANALOG SENSORS)
H	Type 66-NP/25 Cat-5e	SCADA RTU ANALOG POINTS
I	Type 66-P/25 Cat-5e	SCADA LOCAL ALARMS (ALARM DEVICES)
J	Type 66-NP/25 Cat-5e	SCADA RTU STATUS POINTS
K	Type 66-P/25 Cat-5e	SCADA ITC ALARMS
L	Type 66-NP/25 Cat-5e	SCADA RTU STATUS POINTS
M	Type 66-P/25 Cat-5e	SCADA ITC ALARMS
N	Type 66-NP/25 Cat-5e	SCADA RTU STATUS POINTS
O	Type 66-P/25 Cat-5e	SCADA ITC ALARMS
P	Type 66-NP/25 Cat-5e	SCADA RTU STATUS POINTS
Q	Type 66-P/25 Cat-5e	SCADA ITC ALARMS
R	Type 66-NP/25 Cat-5e	SCADA RTU STATUS POINTS
S	FUTURE	
T	FUTURE	
U	FUTURE	
V	FUTURE	
W	Type 110-P/25 Cat-5e	HOUSE DATA DROPS
X	Type 110-P/25 Cat-5e	HOUSE DATA DROPS
Y	Type 110-P/25 Cat-5e	HUB INTERCONNECT
Z	Type 110-P/25 Cat-5e	HUB INTERCONNECT
AA	Type 66-P/25 Cat-3	MAIN CABLE IB (Pairs 1-25)
BB	Type 66-P/25 Cat-3	MAIN CABLE OB (Pairs 1-25)
CC	Type 66-P/25 Cat-3	MAIN CABLE IB (Pairs 26-50)
DD	Type 66-P/25 Cat-3	MAIN CABLE OB (Pairs 26-50)
EE	Type 66-P/25 Cat-3	LOCAL CABLE NIB (Pairs 1-25)
FF	Type 66-P/25 Cat-3	LOCAL CABLE NOB (Pairs 1-25)
GG	Type 66-P/25 Cat-3	LOCAL CABLE SIB (Pairs 1-25)
HH	Type 66-P/25 Cat-3	LOCAL CABLE SOB (Pairs 1-25)
II	Type 66-P/25 Cat-3	SPARE
JJ	Type 66-P/25 Cat-3	SPARE
KK	Type 66-P/25 Cat-3	SPARE
LL	Type 66-P/25 Cat-3	SPARE
MM	Type 66-P/25 Cat-3	FUTURE
NN	Type 66-P/25 Cat-3	FUTURE
OO	Type 66-P/25 Cat-3	FUTURE
PP	Type 66-P/25 Cat-3	FUTURE
QQ	FUTURE	
RR	FUTURE	
SS	FUTURE	
TT	FUTURE	
UU	12-Pole Disc Term Block	PA SPEAKERS
VV	12-Pole Disc Term Block	PA SPEAKERS
WW	12-Pole Disc Term Block	PA SPEAKERS
XX	12-Pole Disc Term Block	PA NS
YY	12-Pole Disc Term Block	PA NS
ZZ	12-Pole Disc Term Block	PA NS

1 WALLFIELD DETAIL
NTS

DESIGN BY:									
DRAWN BY:									
CHECKED BY:									
APPROVED BY:		4	7/3/2023	ISSUED FOR BID	JM	SRM	SM		
CDOT/APPROVED BY:		NO.	DATE	REVISIONS	DES.	DRW.	CHK.	DCCO	CDOT

TRANSYSTEMS
222 SOUTH RIVERSIDE PLAZA SUITE 610
CHICAGO, ILLINOIS 60606

SKIDMORE, OWINGS & MERRILL LLP
224 SOUTH MICHIGAN AVENUE, SUITE 1000
CHICAGO, ILLINOIS 60604

FACET ENGINEERING
4316 NORTH ELSTON AVENUE
CHICAGO, ILLINOIS 60641

CHICAGO DEPARTMENT OF TRANSPORTATION
DIVISION OF ENGINEERING

STATE / LAKE LOOP ELEVATED STATION
200 NORTH STATE STREET, CHICAGO, IL 60601

DETAILS - STANDARD WALL FIELD

CDOT PROJECT D-1-209

DATE: 9/9/2022

SPEC. NO.

DRAWING NO. T-514

REVISION NO.

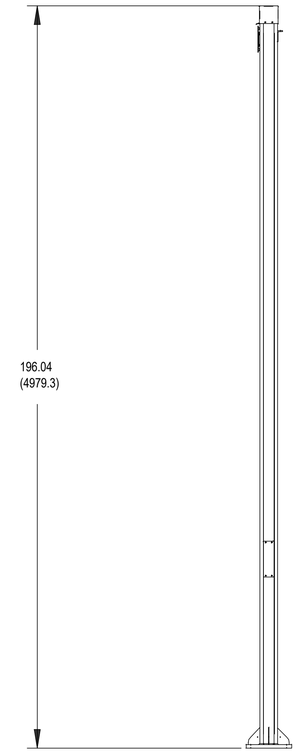

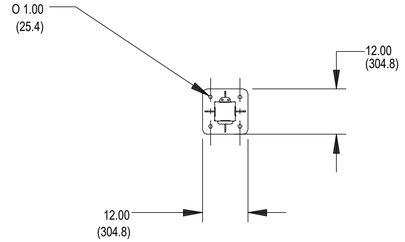

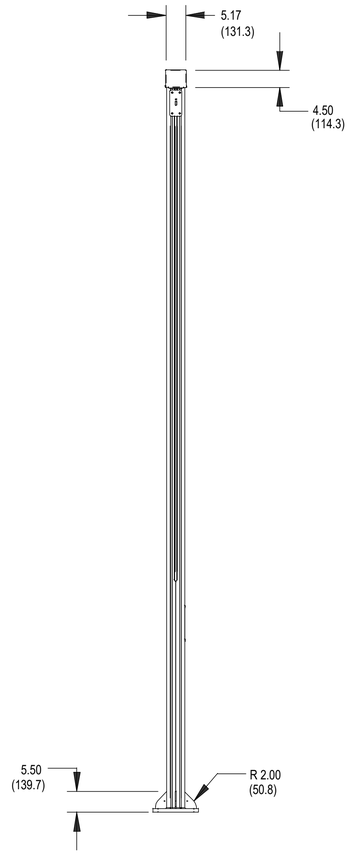

1 UTILITY POLE
NTS

NOTES:

1. REFER TO ARCHITECTURAL AND STRUCTURAL DRAWINGS FOR POLE ATTACHMENT TO PLATFORM DETAILS.
2. ALL DIMENSIONS SHOWN ARE IN INCHES.
3. PROVIDE ADDITIONAL POLE MAST ARM CONNECTIONS FOR (2) LIGHT FIXTURES, WAP AND PTZ CAMERA AS SHOWN ON ELECTRICAL PLANS AND COMMUNICATION PLANS.
4. PROVIDE TWO DIFFERENT POLE HEIGHTS PER PLAN, 17' NOM AND 14' NOMINAL.

DESIGN BY:										
DRAWN BY:										
CHECKED BY:										
APPROVED BY:		4	7/3/2023	ISSUED FOR BID	JM	EM	SM			
CDOT/APPROVED BY:		NO.	DATE	REVISIONS	DES.	DRW.	CHK.	DCCO	CDOT	

TRANSYSTEMS
222 SOUTH RIVERSIDE PLAZA SUITE 610
CHICAGO, ILLINOIS 60606

SKIDMORE, OWINGS & MERRILL LLP
224 SOUTH MICHIGAN AVENUE, SUITE 1000
CHICAGO, ILLINOIS 60604

FACET ENGINEERING
4316 NORTH ELSTON AVENUE
CHICAGO, ILLINOIS 60641

CHICAGO DEPARTMENT OF TRANSPORTATION
DIVISION OF ENGINEERING

STATE / LAKE LOOP ELEVATED STATION
200 NORTH STATE STREET, CHICAGO, IL 60601

DETAILS - UTILITY POLE FOR LIGHTING AND CAMERA

CDOT PROJECT D-1-209 | DATE: 9/9/2022

SPEC. NO.

DRAWING NO. T-515

REVISION NO.

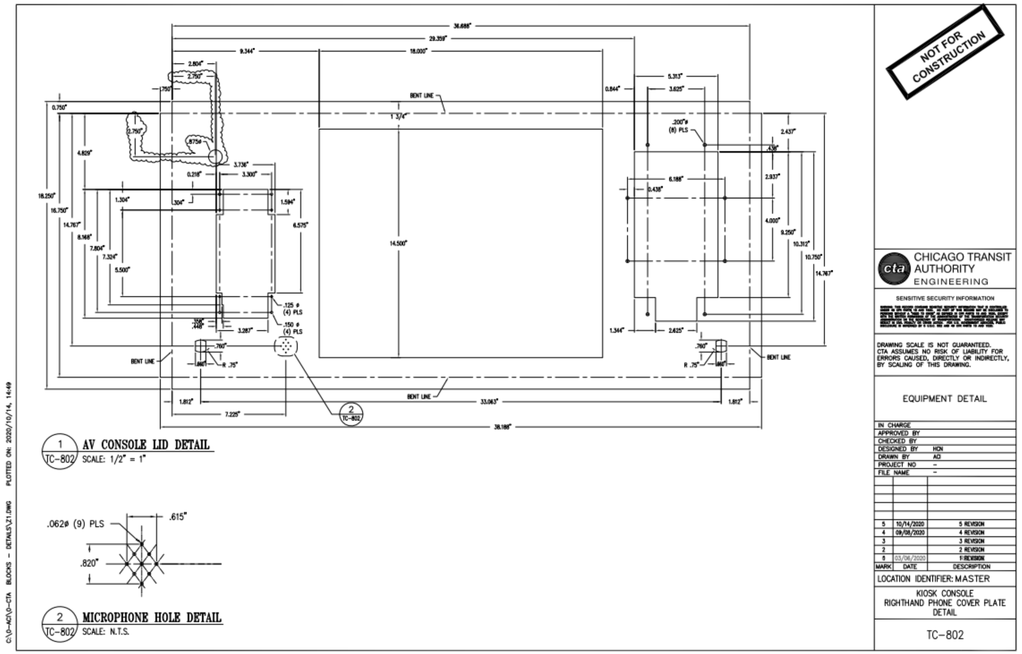

1 TC-802 **AV CONSOLE LID DETAIL**
SCALE: 1/2" = 1"

2 TC-802 **MICROPHONE HOLE DETAIL**
SCALE: N.T.S.

C:\D-ACI\D-CTA BLOCKS - DETAILS\T-516.DWG PLOTTED ON: 2020/10/14, 14:49

NOT FOR CONSTRUCTION

CHICAGO TRANSIT AUTHORITY
ENGINEERING

SENSITIVE SECURITY INFORMATION

[redacted]

DRAWING SCALE IS NOT GUARANTEED. CTA ASSUMES NO RISK OF LIABILITY FOR ERRORS CAUSED, DIRECTLY OR INDIRECTLY, BY SCALING OF THIS DRAWING.

EQUIPMENT DETAIL

IN CHARGE	
APPROVED BY	
CHECKED BY	
DESIGNED BY	HCH
DRAWN BY	AO
PROJECT NO	–
FILE NAME	–

MARK	DATE	DESCRIPTION
5	10/14/2020	5 REVISION
4	09/08/2020	4 REVISION
3		3 REVISION
2		2 REVISION
1	03/06/2020	1 REVISION

LOCATION IDENTIFIER: MASTER

KIOSK CONSOLE
RIGHTHAND PHONE COVER PLATE DETAIL

TC-802

A/V Kiosk Console

NOTES:

1. SEE DRAWING T-001 FOR COMMUNICATIONS SYMBOL LIST, GENERAL NOTES AND ABBREVIATIONS.
2. SEE DRAWING E-411 FOR CAK LAYOUT.
3. THESE DETAILS AND IMAGES ARE FOR REFERENCE. THE CONTRACTOR SHALL COORDINATE WITH CTA FOR FINAL AV CONSOLE REQUIREMENTS. THE CONTRACTOR SHALL PROVIDE MICROPHONE, TELEPHONE,, AND NEW DISPLAY SCREEN IN STAINLESS STEEL ENCLOSURE AS SHOWN.

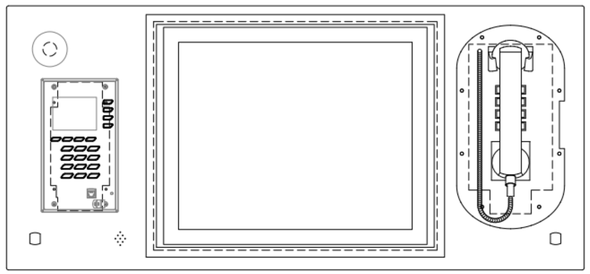

1 TC-802 **AV CONSOLE LID DETAIL**
SCALE: 1/2" = 1"

C:\D-ACI\D-CTA BLOCKS - DETAILS\T-516.DWG PLOTTED ON: 2020/10/14, 15:06

NOT FOR CONSTRUCTION

CHICAGO TRANSIT AUTHORITY
ENGINEERING

SENSITIVE SECURITY INFORMATION

[redacted]

DRAWING SCALE IS NOT GUARANTEED. CTA ASSUMES NO RISK OF LIABILITY FOR ERRORS CAUSED, DIRECTLY OR INDIRECTLY, BY SCALING OF THIS DRAWING.

EQUIPMENT DETAIL

IN CHARGE	
APPROVED BY	
CHECKED BY	
DESIGNED BY	HCH
DRAWN BY	AO
PROJECT NO	–
FILE NAME	–

MARK	DATE	DESCRIPTION
4	09/08/2020	4 REVISION
3		3 REVISION
2		2 REVISION
1	03/06/2020	1 REVISION

LOCATION IDENTIFIER: MASTER

KIOSK CONSOLE
RIGHTHAND PHONE COVER PLATE DETAIL

TC-802

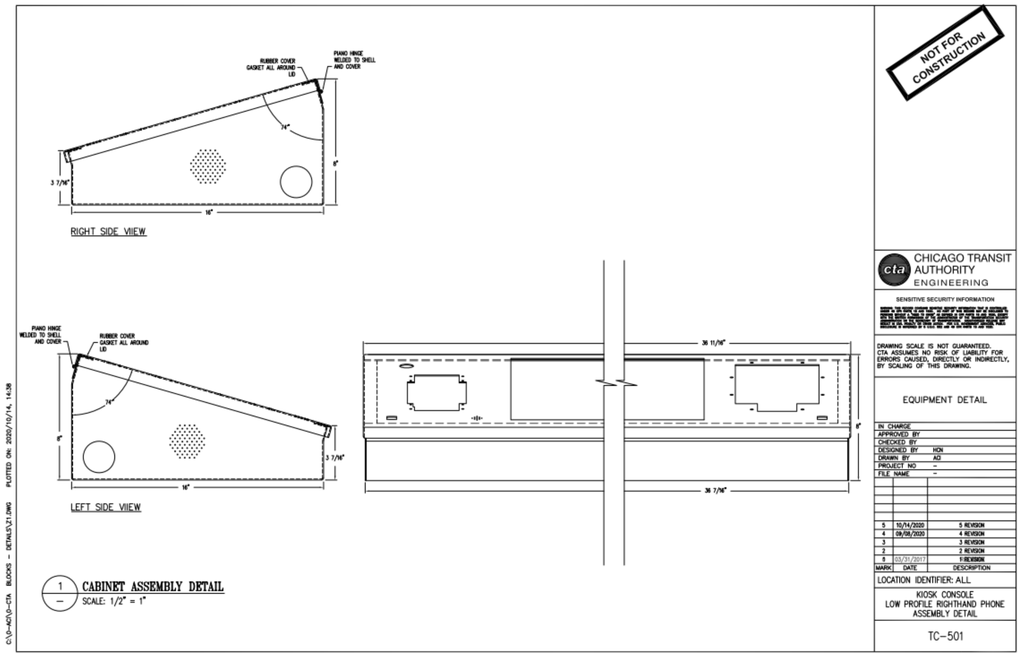

1 – **CABINET ASSEMBLY DETAIL**
SCALE: 1/2" = 1"

C:\D-ACI\D-CTA BLOCKS - DETAILS\T-516.DWG PLOTTED ON: 2020/10/14, 14:38

NOT FOR CONSTRUCTION

CHICAGO TRANSIT AUTHORITY
ENGINEERING

SENSITIVE SECURITY INFORMATION

[redacted]

DRAWING SCALE IS NOT GUARANTEED. CTA ASSUMES NO RISK OF LIABILITY FOR ERRORS CAUSED, DIRECTLY OR INDIRECTLY, BY SCALING OF THIS DRAWING.

EQUIPMENT DETAIL

IN CHARGE	
APPROVED BY	
CHECKED BY	
DESIGNED BY	HCH
DRAWN BY	AO
PROJECT NO	–
FILE NAME	–

MARK	DATE	DESCRIPTION
5	10/14/2020	5 REVISION
4	09/08/2020	4 REVISION
3		3 REVISION
2		2 REVISION
1	03/31/2017	1 REVISION

LOCATION IDENTIFIER: ALL

KIOSK CONSOLE
LOW PROFILE RIGHTHAND PHONE ASSEMBLY DETAIL

TC-501

DESIGN BY:										
DRAWN BY:										
CHECKED BY:										
APPROVED BY:		4	7/3/2023	ISSUED FOR BID	JM	SRM	SM			
CDOT/APPROVED BY:		NO.	DATE	REVISIONS	DES.	DRW.	CHK.	DCCO	CDOT	

TRANSYSTEMS
222 SOUTH RIVERSIDE PLAZA SUITE 610
CHICAGO, ILLINOIS 60606

SKIDMORE, OWINGS & MERRILL LLP
224 SOUTH MICHIGAN AVENUE, SUITE 1000
CHICAGO, ILLINOIS 60604

FACET ENGINEERING
DBE/MBE CERTIFIED
Performance • Respect • Initiation • Dedication • Experience
FACET ENGINEERING
4316 NORTH ELSTON AVENUE
CHICAGO, ILLINOIS 60641

CHICAGO DEPARTMENT OF TRANSPORTATION
DIVISION OF ENGINEERING

STATE / LAKE LOOP ELEVATED STATION
200 NORTH STATE STREET, CHICAGO, IL 60601

SPEC. NO.

DETAILS - CAK AV CONSOLE

DRAWING NO.
T-516

CDOT PROJECT D-1-209

DATE: 9/9/2022

REVISION NO.

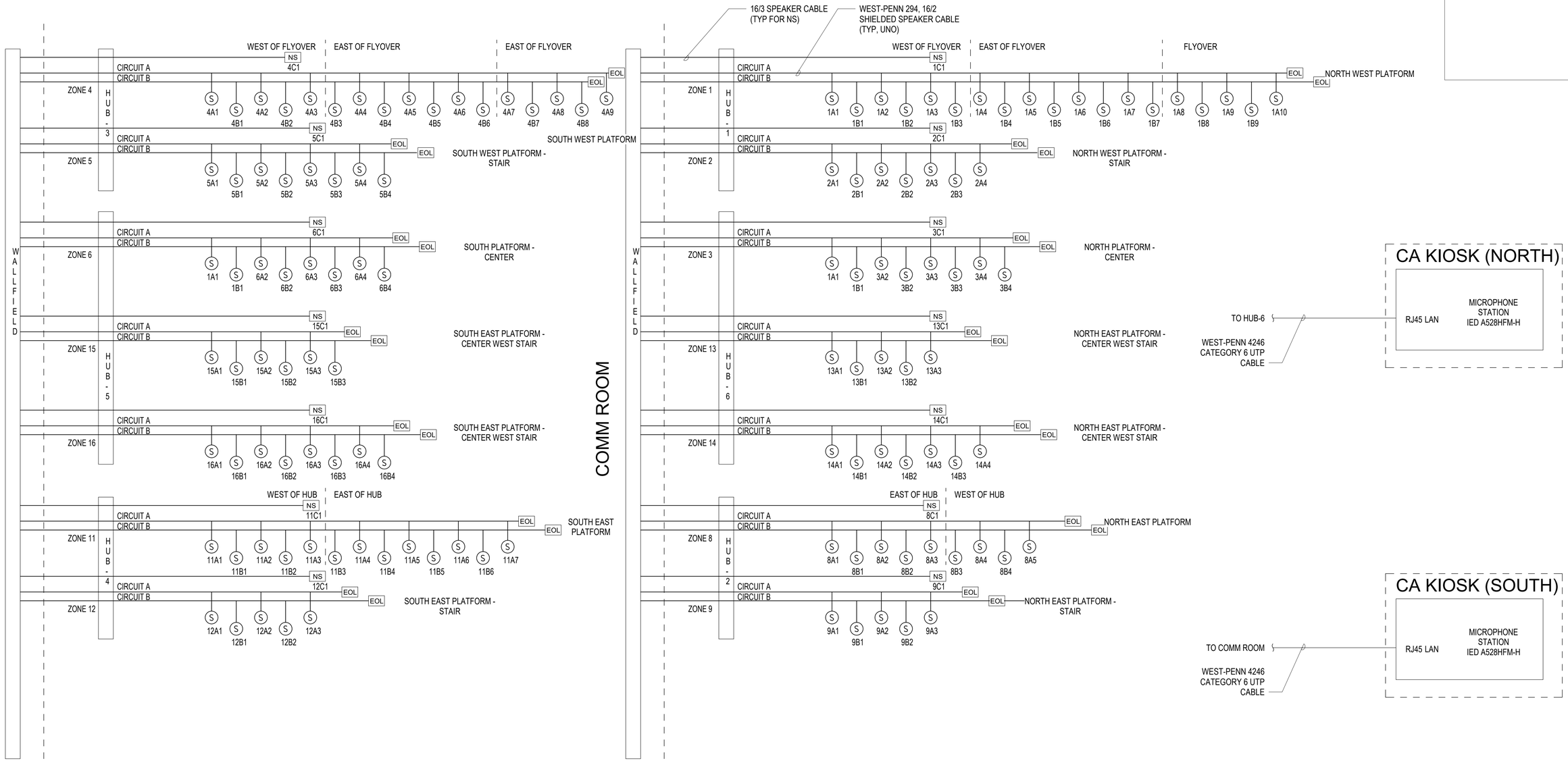

1 PUBLIC ADDRESS SYSTEM DIAGRAM

NTS

DESIGN BY:										
DRAWN BY:										
CHECKED BY:										
APPROVED BY:		4	7/3/2023	ISSUED FOR BID	JM	SRM	SM			
CDOT/APPROVED BY:		NO.	DATE	REVISIONS	DES.	DRW.	CHK.	DCCO	CDOT	

TRANSYSTEMS
222 SOUTH RIVERSIDE PLAZA SUITE 610
CHICAGO, ILLINOIS 60606

SKIDMORE, OWINGS & MERRILL LLP
224 SOUTH MICHIGAN AVENUE, SUITE 1000
CHICAGO, ILLINOIS 60604

FACET ENGINEERING
4316 NORTH ELSTON AVENUE
CHICAGO, ILLINOIS 60641

CHICAGO DEPARTMENT OF TRANSPORTATION
DIVISION OF ENGINEERING

STATE / LAKE LOOP ELEVATED STATION
200 NORTH STATE STREET, CHICAGO, IL 60601

DIAGRAMS - PUBLIC ADDRESS SYSTEM

CDOT PROJECT D-1-209

DATE: 9/9/2022

SPEC. NO.

DRAWING NO. T-601

REVISION NO.

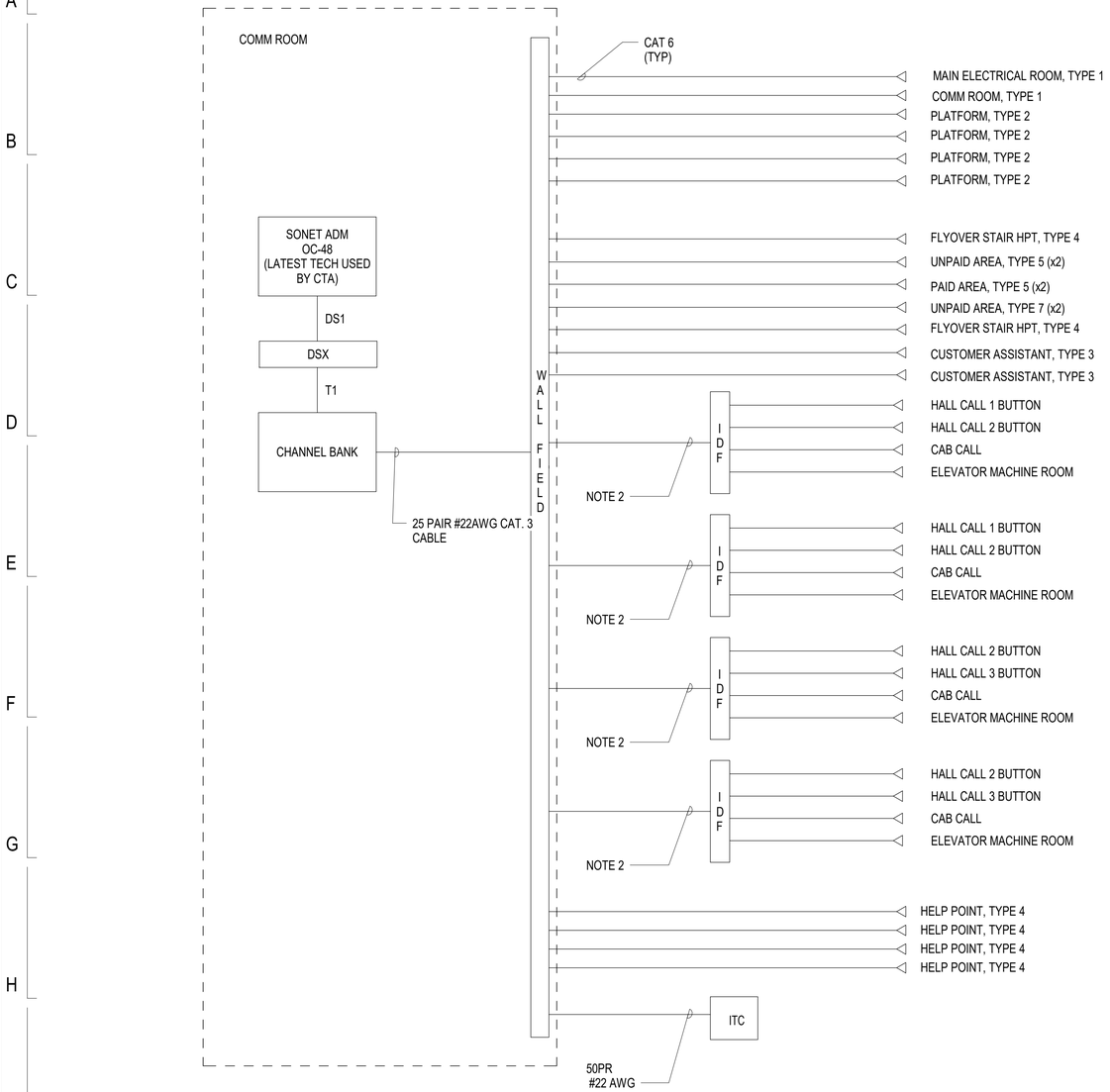

1 TELEPHONE SYSTEM BLOCK DIAGRAM

NTS

NOTES:

1. SEE DRAWING T-001 FOR COMMUNICATIONS SYMBOL LIST, GENERAL NOTES AND ABBREVIATIONS.
2. (8) CAT6, (1) PR #18AWG, (1) 4MM FO IN 1-1/2" C. CAT6 CABLE QUANTITY INCLUDES CCTV CAMERA.

DESIGN BY:										
DRAWN BY:										
CHECKED BY:										
APPROVED BY:		4	7/3/2023	ISSUED FOR BID	JM	SRM	SM			
CDOT/APPROVED BY:		NO.	DATE	REVISIONS	DES.	DRW.	CHK.	DCCO	CDOT	

TRANSYSTEMS
222 SOUTH RIVERSIDE PLAZA SUITE 610
CHICAGO, ILLINOIS 60606

SKIDMORE, OWINGS & MERRILL LLP
224 SOUTH MICHIGAN AVENUE, SUITE 1000
CHICAGO, ILLINOIS 60604

FACET ENGINEERING
DBE/MBE CERTIFIED
Performance • Respect • Initiation • Dedication • Experience
FACET ENGINEERING
4316 NORTH ELSTON AVENUE
CHICAGO, ILLINOIS 60641

CHICAGO DEPARTMENT
OF TRANSPORTATION
DIVISION OF ENGINEERING

STATE / LAKE LOOP ELEVATED STATION
200 NORTH STATE STREET, CHICAGO, IL 60601

SPEC. NO.

DIAGRAMS - TELEPHONE SYSTEM

DRAWING NO.
T-602

CDOT PROJECT D-1-209

DATE: 9/9/2022

REVISION NO.

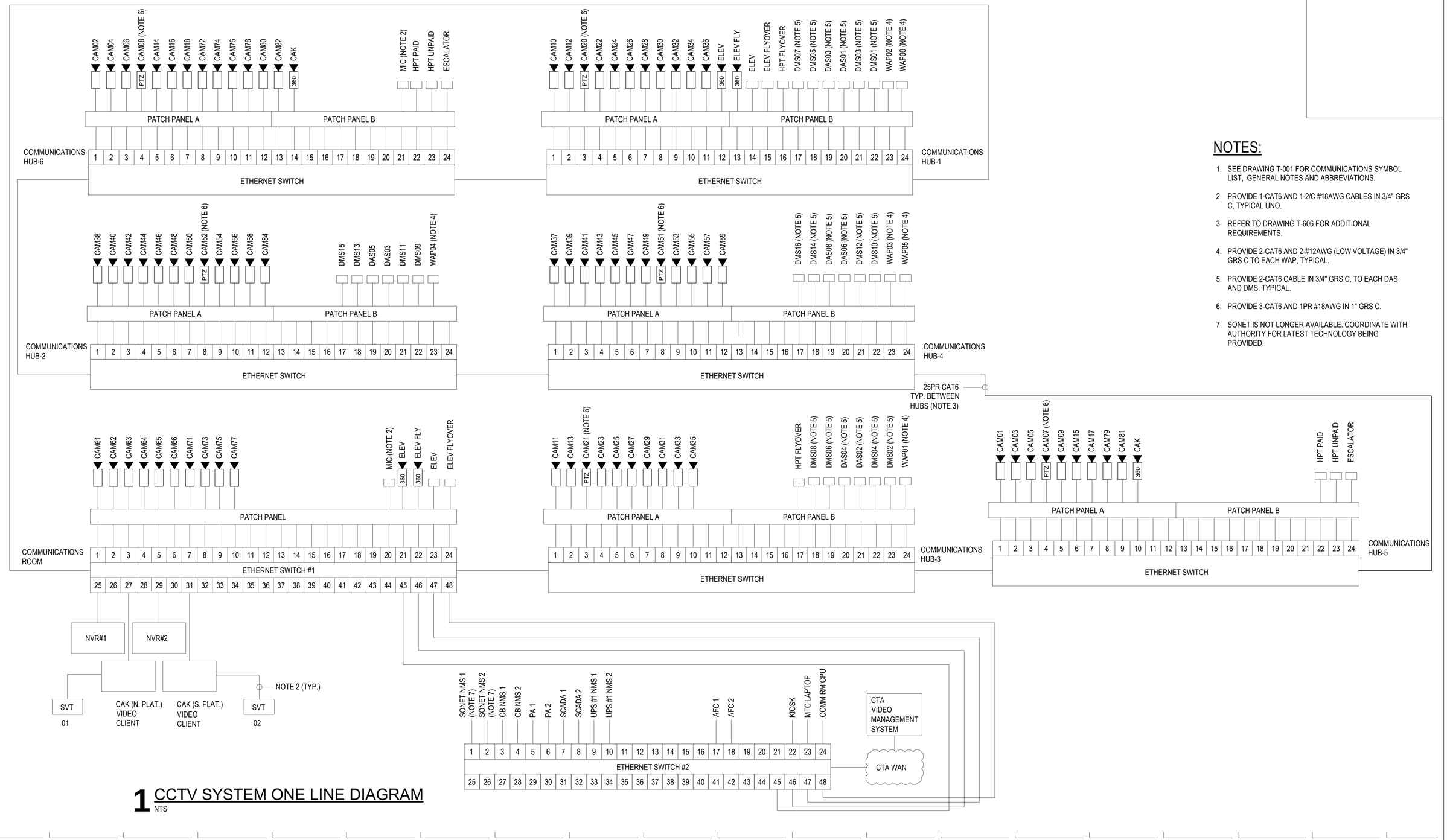

1 CCTV SYSTEM ONE LINE DIAGRAM
NTS

NOTES:

1. SEE DRAWING T-001 FOR COMMUNICATIONS SYMBOL LIST, GENERAL NOTES AND ABBREVIATIONS.
2. PROVIDE 1-CAT6 AND 1-2/C #18AWG CABLES IN 3/4" GRS C, TYPICAL UNO.
3. REFER TO DRAWING T-606 FOR ADDITIONAL REQUIREMENTS.
4. PROVIDE 2-CAT6 AND 2-#12AWG (LOW VOLTAGE) IN 3/4" GRS C TO EACH WAP, TYPICAL.
5. PROVIDE 2-CAT6 CABLE IN 3/4" GRS C, TO EACH DAS AND DMS, TYPICAL.
6. PROVIDE 3-CAT6 AND 1PR #18AWG IN 1" GRS C.
7. SONET IS NOT LONGER AVAILABLE. COORDINATE WITH AUTHORITY FOR LATEST TECHNOLOGY BEING PROVIDED.

DESIGN BY:									
DRAWN BY:									
CHECKED BY:									
APPROVED BY:		4	7/3/2023	ISSUED FOR BID	JM	SRM	SM		
CDOT/APPROVED BY:		NO.	DATE	REVISIONS	DES.	DRW.	CHK.	DCCO	CDOT

TRANSYSTEMS
222 SOUTH RIVERSIDE PLAZA SUITE 610
CHICAGO, ILLINOIS 60606

SKIDMORE, OWINGS & MERRILL LLP
224 SOUTH MICHIGAN AVENUE, SUITE 1000
CHICAGO, ILLINOIS 60604

FACET ENGINEERING
4316 NORTH ELSTON AVENUE
CHICAGO, ILLINOIS 60641

CHICAGO DEPARTMENT OF TRANSPORTATION
DIVISION OF ENGINEERING

STATE / LAKE LOOP ELEVATED STATION
200 NORTH STATE STREET, CHICAGO, IL 60601

SPEC. NO.

DIAGRAMS - CCTV SYSTEM

DRAWING NO. T-603

CDOT PROJECT D-1-209

DATE: 9/9/2022

REVISION NO.

NOTES:

1. SEE DRAWING T-001 FOR COMMUNICATIONS SYMBOL LIST, GENERAL NOTES AND ABBREVIATIONS.
2. EMPTY CONDUIT WITH PULL STRING AND BACK BOX WITH BLANK COVER PLATES TO BE PROVIDED. WIRE AND CABLES TO BE PROVIDED IN FUTURE BY AUTHORITY.

NOTES:

1. ALL CONDUITS SHALL BE 3/4" UNLESS NOTED OTHERWISE.
2. REFER TO PLANS FOR EXACT DOOR SWING.
3. REFER TO AUTODOOR SHOP DRAWINGS FOR EXACT CONDUIT ROUGH-IN LOCATIONS.
4. FOR FILLED FRAMES, PROVIDE EXPOSED CONDUITS ON SECURE SIDE OF DOOR.
5. ALL CONDUITS ARE SHOWN RECESSED IN WALL. WHEN SURFACE-MOUNTED CONDUIT IS REQUIRED, ROUTE ON SECURED SIDE OF DOOR AND PENETRATE AT DEVICE LOCATION AS REQUIRED.
6. PROVIDE CONDUIT AT STRIKE SIDE OF DOOR FOR DOORS PREPPED FOR ELECTRIC STRIKES. PROVIDE CONDUIT AT HINGE SIDE OF DOOR FOR DOORS PREPPED FOR ELECTRIFIED DOOR HARDWARE.

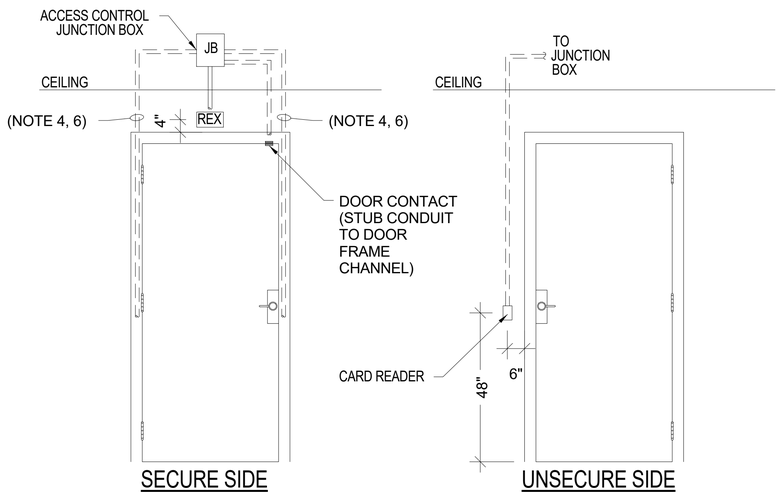

1 ACCESS CONTROL AT SINGLE DOOR — SCALE: N.T.S.

NOTES:

1. ALL CONDUITS SHALL BE 3/4" UNLESS NOTED OTHERWISE.
2. REFER TO PLANS FOR EXACT DOOR SWING.
3. REFER TO AUTODOOR SHOP DRAWINGS FOR EXACT CONDUIT ROUGH-IN LOCATIONS.
4. FOR FILLED FRAMES, PROVIDE EXPOSED CONDUITS ON SECURE SIDE OF DOOR.
5. ALL CONDUITS ARE SHOWN RECESSED IN WALL. WHEN SURFACE-MOUNTED CONDUIT IS REQUIRED, ROUTE ON SECURED SIDE OF DOOR AND PENETRATE AT DEVICE LOCATION AS REQUIRED.

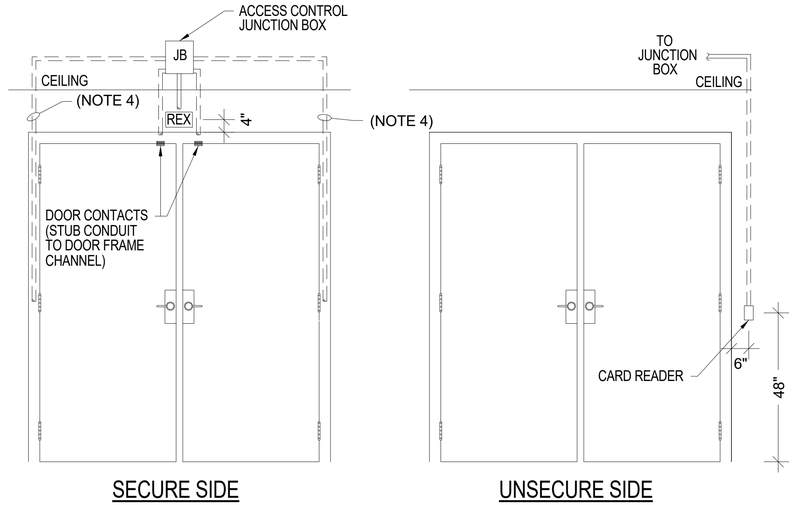

2 ACCESS CONTROL AT DOUBLE DOOR — SCALE: N.T.S.

DESIGN BY:									
DRAWN BY:									
CHECKED BY:									
APPROVED BY:		4	7/3/2023	ISSUED FOR BID	JM	SRM	SM		
CDOT/APPROVED BY:		NO.	DATE	REVISIONS	DES.	DRW.	CHK.	DCCO	CDOT

TRANSYSTEMS
222 SOUTH RIVERSIDE PLAZA SUITE 610
CHICAGO, ILLINOIS 60606

SKIDMORE, OWINGS & MERRILL LLP
224 SOUTH MICHIGAN AVENUE, SUITE 1000
CHICAGO, ILLINOIS 60604

FACET ENGINEERING
4316 NORTH ELSTON AVENUE
CHICAGO, ILLINOIS 60641

CHICAGO DEPARTMENT OF TRANSPORTATION
DIVISION OF ENGINEERING

STATE / LAKE LOOP ELEVATED STATION
200 NORTH STATE STREET, CHICAGO, IL 60601

SPEC. NO.

DIAGRAMS - CARD READER SYSTEM

DRAWING NO. T-604

CDOT PROJECT D-1-209

DATE: 9/9/2022

REVISION NO.

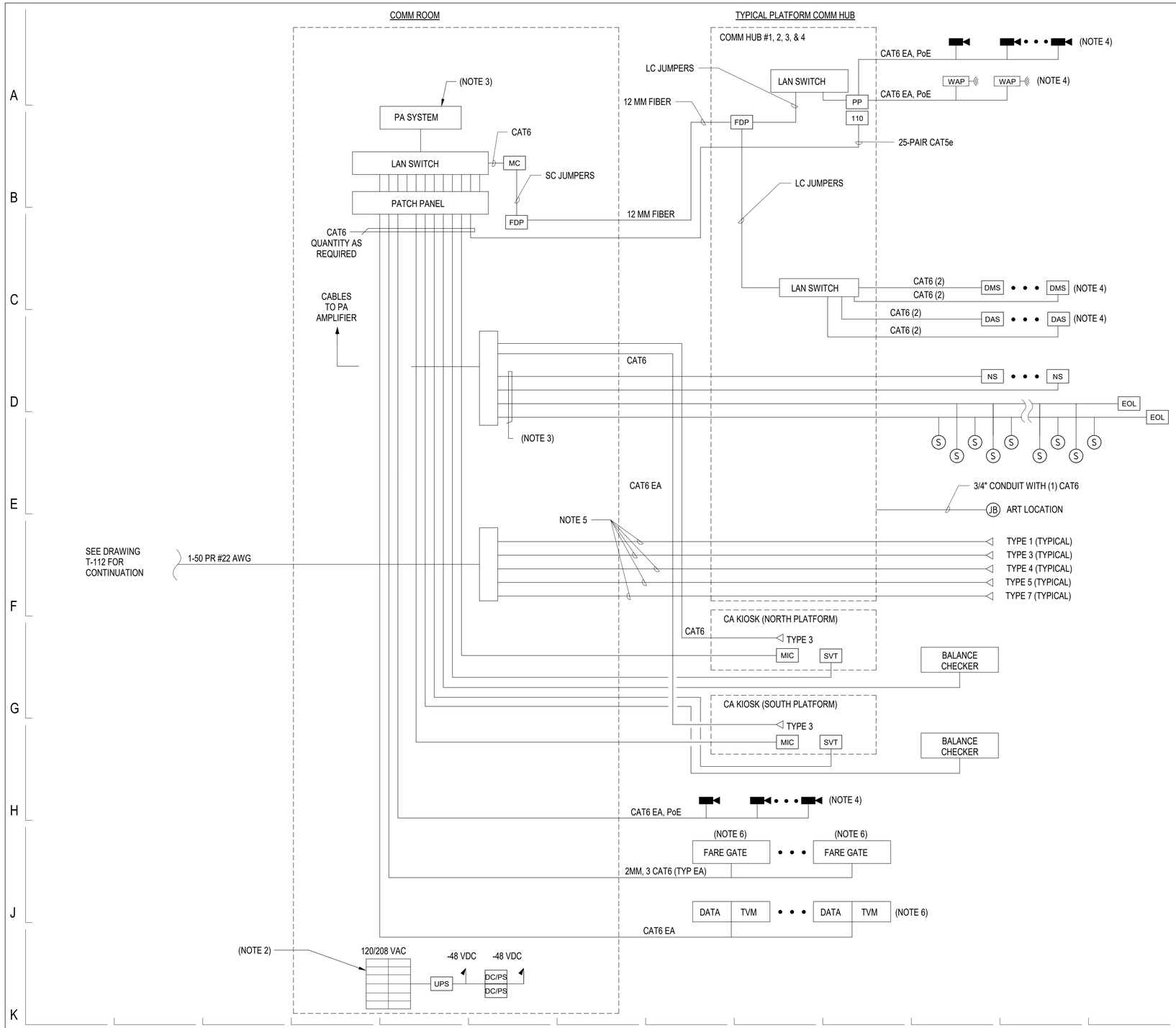

NOTES:

1. SEE DRAWING T-001 FOR COMMUNICATIONS SYMBOL LIST, GENERAL NOTES AND ABBREVIATIONS.
2. COMMUNICATION ROOM PANEL CP-1.
3. REFER TO DRAWING T-601 FOR PA SYSTEM REQUIREMENTS.
4. REFER TO DRAWING T-603 FOR ADDITIONAL REQUIREMENTS.
5. REFER TO DRAWING T-602 FOR ADDITIONAL REQUIREMENTS.
6. REFER TO DRAWING T-607 FOR ADDITIONAL REQUIREMENTS.

DESIGN BY:										
DRAWN BY:										
CHECKED BY:										
APPROVED BY:		4	7/3/2023	ISSUED FOR BID	JM	SRM	SM			
CDOT/APPROVED BY:		NO.	DATE	REVISIONS	DES.	DRW.	CHK.	DCCO	CDOT	

TRANSYSTEMS
222 SOUTH RIVERSIDE PLAZA SUITE 610
CHICAGO, ILLINOIS 60606

SKIDMORE, OWINGS & MERRILL LLP
224 SOUTH MICHIGAN AVENUE, SUITE 1000
CHICAGO, ILLINOIS 60604

FACET ENGINEERING
4316 NORTH ELSTON AVENUE
CHICAGO, ILLINOIS 60641

CHICAGO DEPARTMENT
OF TRANSPORTATION
DIVISION OF ENGINEERING

STATE / LAKE LOOP ELEVATED STATION
200 NORTH STATE STREET, CHICAGO, IL 60601

DIAGRAMS - BLOCK

SPEC. NO.

DRAWING NO.
T-605

CDOT PROJECT D-1-209

DATE: 9/9/2022

REVISION NO.

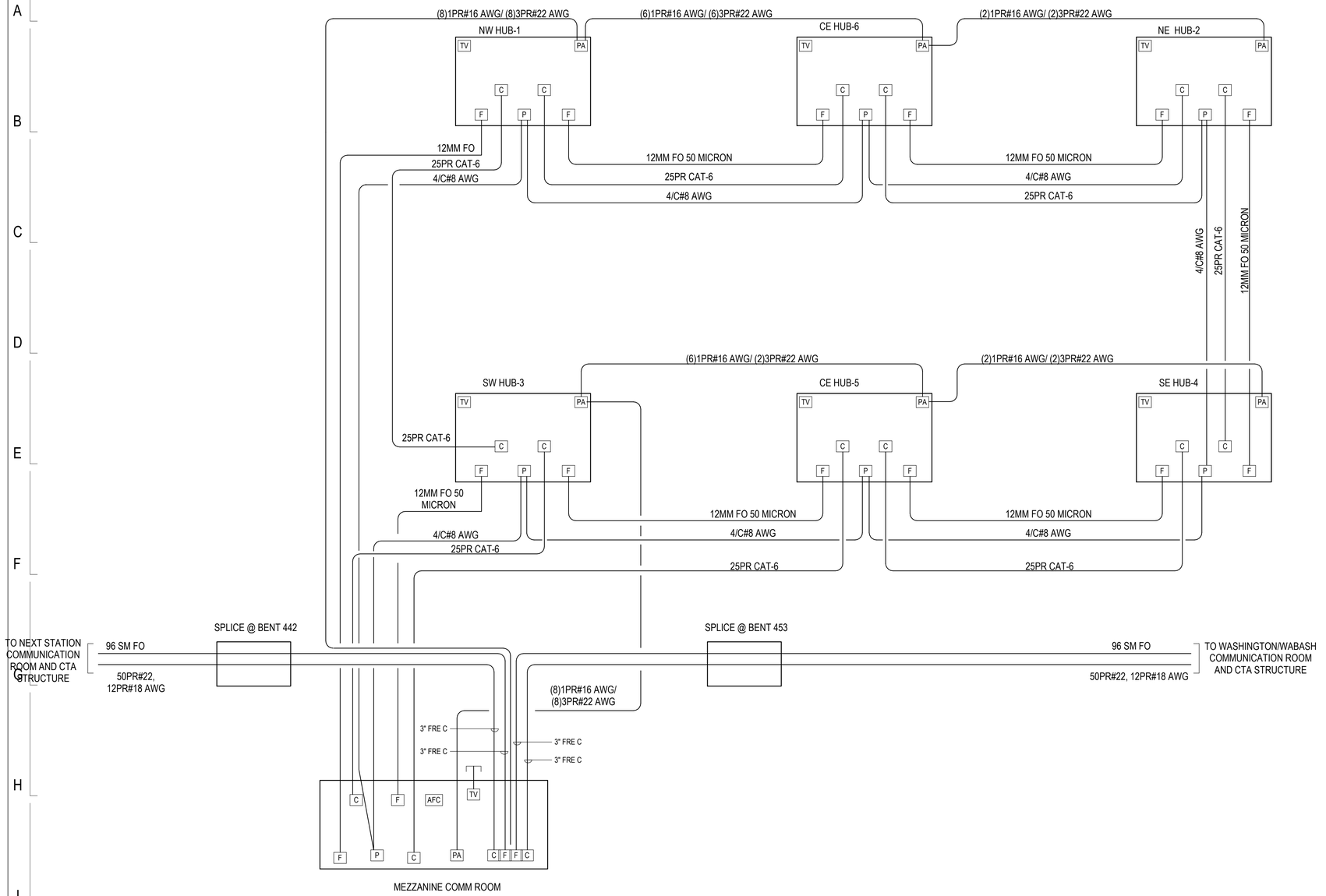

1 COMMUNICATIONS NETWORK CONNECTION DIAGRAM
NTS

NOTES:

1. SEE DRAWING T-001 FOR COMMUNICATIONS SYMBOL LIST, GENERAL NOTES AND ABBREVIATIONS.
2. PROVIDE TEMPORARY 96 SM FO AND 50PR#22AWG BACKBONE CABLES DURING CONSTRUCTION TO MAINTAIN COMMUNICATIONS SERVICES DURING CONSTRUCTION.

DESIGN BY:									
DRAWN BY:									
CHECKED BY:									
APPROVED BY:		4	7/3/2023	ISSUED FOR BID	JM	SRM	SM		
CDOT/APPROVED BY:		NO.	DATE	REVISIONS	DES.	DRW.	CHK.	DCCO	CDOT

TRANSYSTEMS
222 SOUTH RIVERSIDE PLAZA SUITE 610
CHICAGO, ILLINOIS 60606

SKIDMORE, OWINGS & MERRILL LLP
224 SOUTH MICHIGAN AVENUE, SUITE 1000
CHICAGO, ILLINOIS 60604

FACET ENGINEERING
DBE/MBE CERTIFIED
Performance • Respect • Initiation • Dedication • Experience
FACET ENGINEERING
4316 NORTH ELSTON AVENUE
CHICAGO, ILLINOIS 60641

CHICAGO DEPARTMENT OF TRANSPORTATION
DIVISION OF ENGINEERING

STATE / LAKE LOOP ELEVATED STATION
200 NORTH STATE STREET, CHICAGO, IL 60601

DIAGRAMS - NETWORK CONNECTION

CDOT PROJECT D-1-209

DATE: 9/9/2022

SPEC. NO.

DRAWING NO. T-606

REVISION NO.

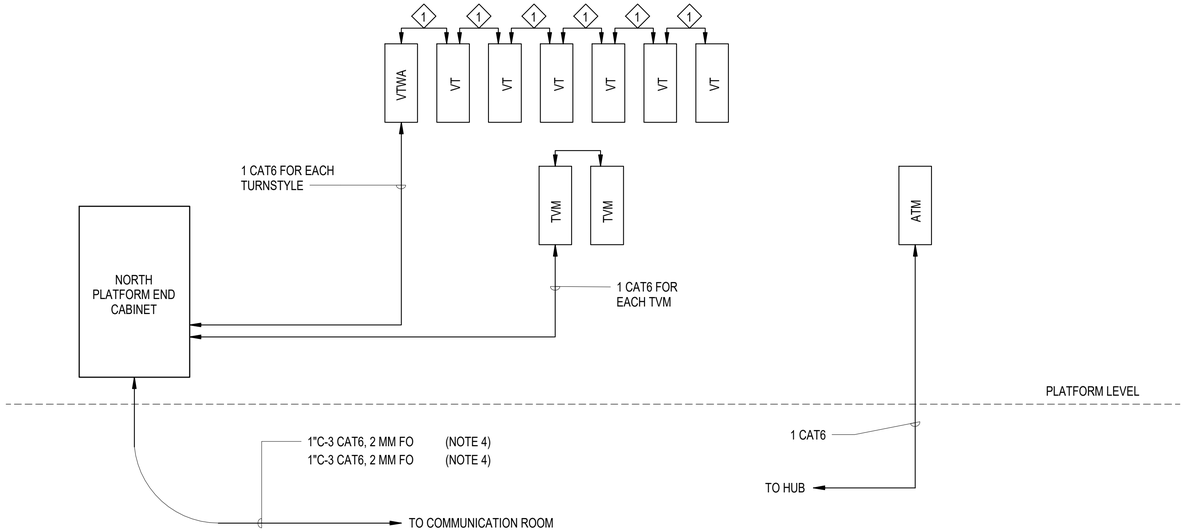

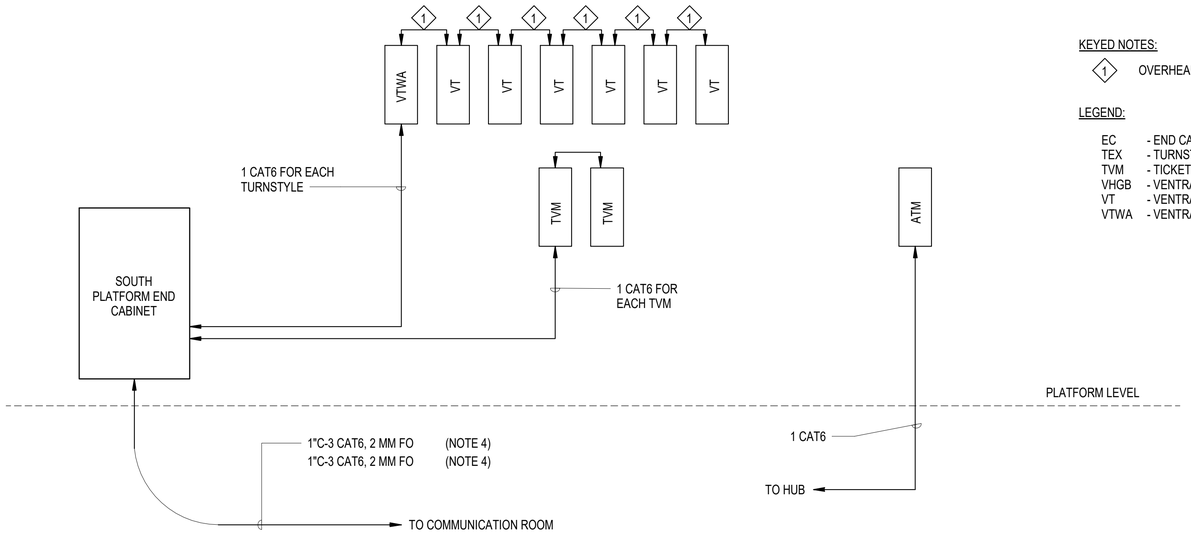

1 REVENUE EQUIPMENT COMMUNICATION DIAGRAM
NTS

KEYED NOTES:

1 OVERHEAD CONDUIT AND WORKING PART OF THE FARE EQUIPMENT PACKAGE

LEGEND:

EC	- END CABINET
TEX	- TURNSTYLE EXIT ONLY
TVM	- TICKET VENDING MACHINE (VENTRA)
VHGB	- VENTRA HIGH BARRIER GATE
VT	- VENTRA TURNSTYLE
VTWA	- VENTRA TURNSTYLE WHEEELCHAIR ACCESSIBLE

NOTES:

1. SEE DRAWING T-001 FOR COMMUNICATIONS SYMBOL LIST, GENERAL NOTES AND ABBREVIATIONS.
2. ALL DATA CABLES TO BE CATEGORY 6 UTP 4-PR IN A MINIMUM 1" GRS C. UNO.
3. ELECTRICAL CONTRACTOR TO PULL ALL POWER AND DATA CABLES BEFORE INSTALLATION AND TO PROVIDE 15 FEET EXTRA LENGTH AT EACH STUB UP OR JUNCTION BOX.
4. REFER TO ELECTRICAL PLANS FOR REVENUE EQUIPMENT POWER REQUIREMENTS.
5. REFER TO E-603 FOR CABLE/CONDUIT SCHEDULE.
6. COORDIANTE ALL POWER AND DATA CONDUIT ENTRY LOCATIONS WITH FARE CONTROL EQUIPMENT VENDOR.
7. ALL CONDUITS TO ENTER FROM THE BOTTOM OF THE EQUIPMENT, UNO.

DESIGN BY:										
DRAWN BY:										
CHECKED BY:										
APPROVED BY:		4	7/3/2023	ISSUED FOR BID	JM	SRM	SM			
CDOT/APPROVED BY:		NO.	DATE	REVISIONS	DES.	DRW.	CHK.	DCCO	CDOT	

TRANSYSTEMS
222 SOUTH RIVERSIDE PLAZA SUITE 610
CHICAGO, ILLINOIS 60606

SKIDMORE, OWINGS & MERRILL LLP
224 SOUTH MICHIGAN AVENUE, SUITE 1000
CHICAGO, ILLINOIS 60604

FACET ENGINEERING
4316 NORTH ELSTON AVENUE
CHICAGO, ILLINOIS 60641

CHICAGO DEPARTMENT OF TRANSPORTATION
DIVISION OF ENGINEERING

STATE / LAKE LOOP ELEVATED STATION
200 NORTH STATE STREET, CHICAGO, IL 60601

SPEC. NO.

DIAGRAMS - FARE CONTROL EQUIPMENT BLOCK

DRAWING NO. T-607

CDOT PROJECT D-1-209

DATE: 9/9/2022

REVISION NO.

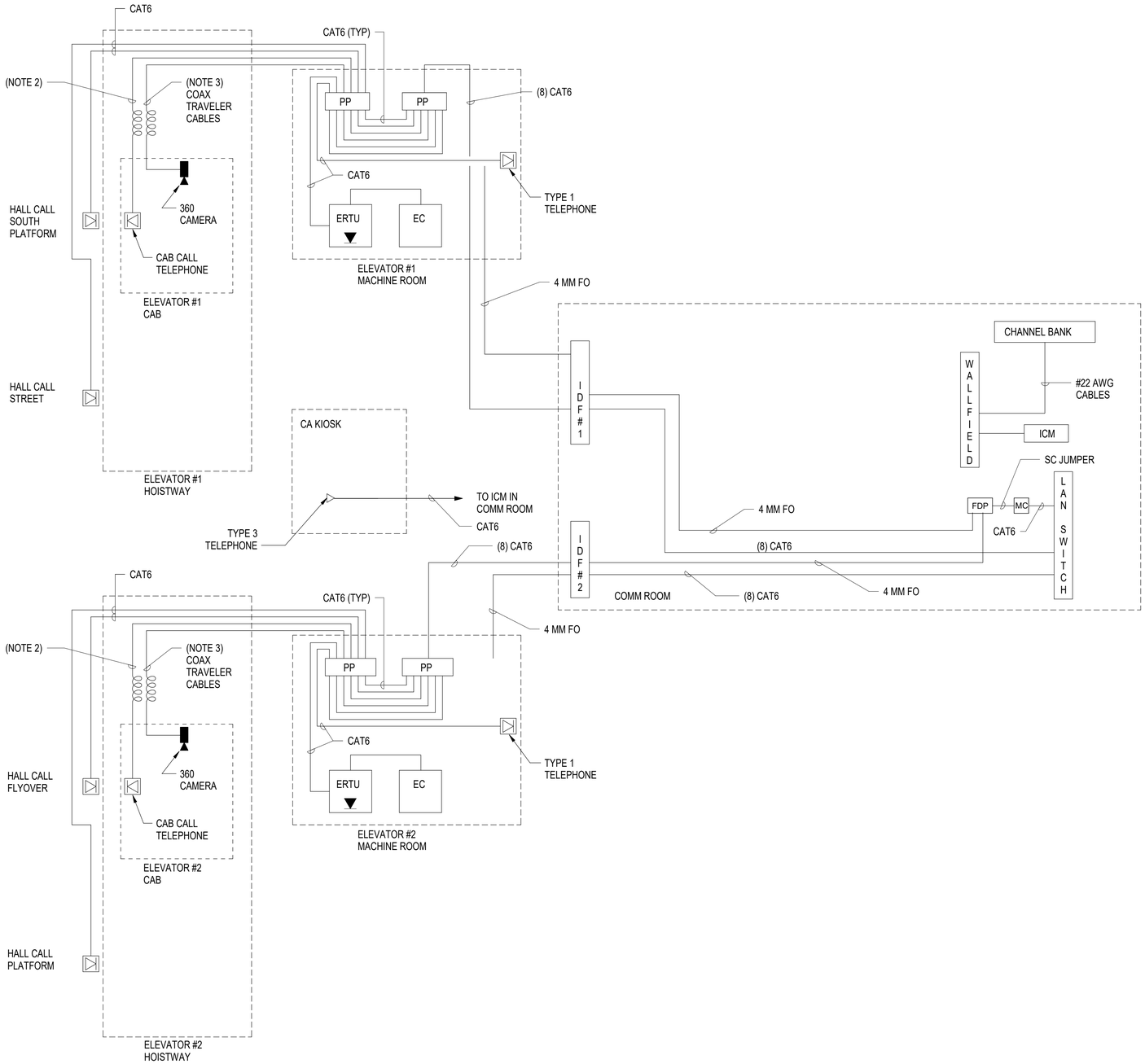

1 ELEVATOR ONE LINE DIAGRAM NORTH PLATFORM (TYPICAL FOR SOUTH)

NTS

NOTES:

1. SEE DRAWING T-001 FOR COMMUNICATIONS SYMBOL LIST, GENERAL NOTES AND ABBREVIATIONS.
2. PROVIDE SHIELDED TWISTED PAIR NO. 20 AWG TRAVELER CBLE.
3. PROVIDE COAX TO CAT6 CONVERTER AT TOP AND BOTTOM OF TRAVELER CABLE.

DESIGN BY:									
DRAWN BY:									
CHECKED BY:									
APPROVED BY:		4	7/3/2023	ISSUED FOR BID	JM	SRM	SM		
CDOT/APPROVED BY:		NO.	DATE	REVISIONS	DES.	DRW.	CHK.	DCCO	CDOT

TRANSYSTEMS
222 SOUTH RIVERSIDE PLAZA SUITE 610
CHICAGO, ILLINOIS 60606

SKIDMORE, OWINGS & MERRILL LLP
224 SOUTH MICHIGAN AVENUE, SUITE 1000
CHICAGO, ILLINOIS 60604

FACET ENGINEERING
4316 NORTH ELSTON AVENUE
CHICAGO, ILLINOIS 60641

CHICAGO DEPARTMENT
OF TRANSPORTATION
DIVISION OF ENGINEERING

STATE / LAKE LOOP ELEVATED STATION
200 NORTH STATE STREET, CHICAGO, IL 60601

SPEC. NO.

DIAGRAMS - ELEVATOR

DRAWING NO.
T-608

CDOT PROJECT D-1-209

DATE: 9/9/2022

REVISION NO.

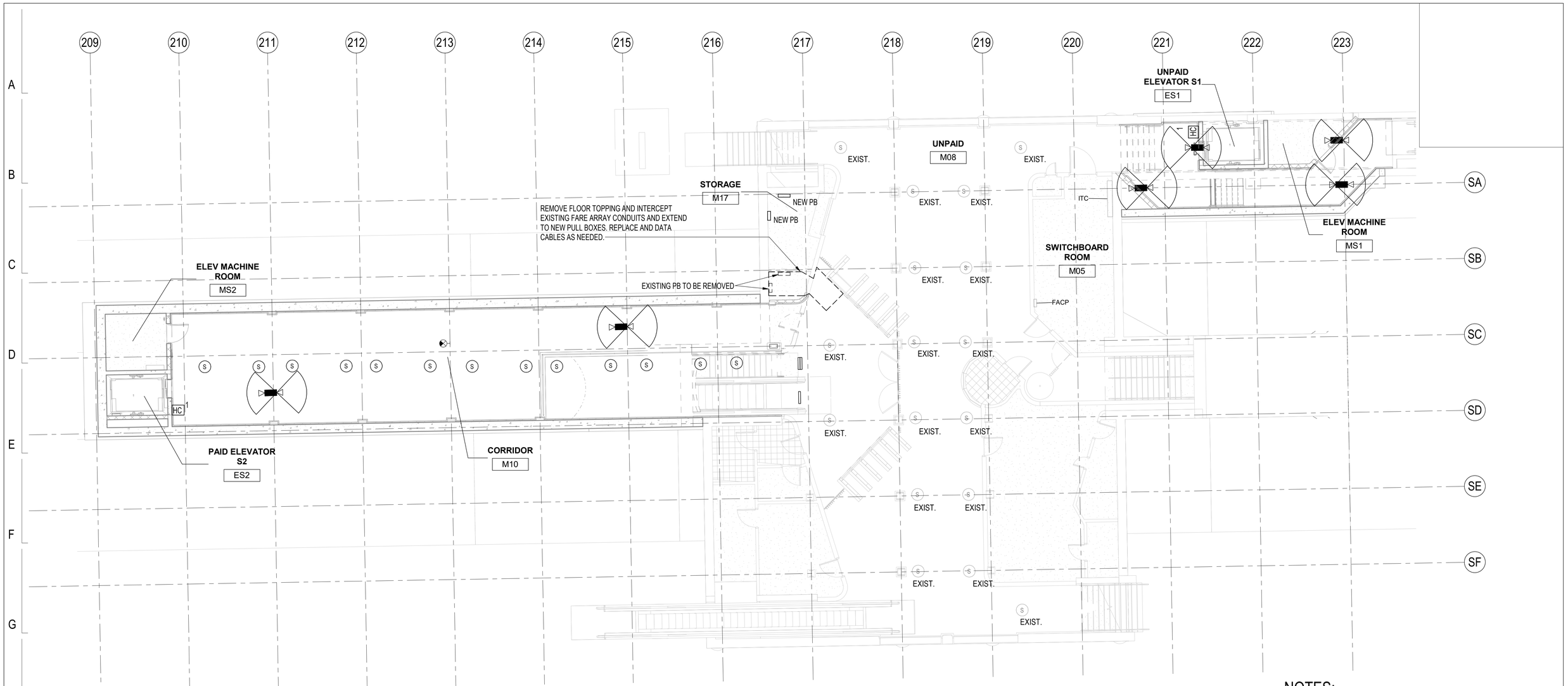

NOTES:

1. SEE DRAWING T-001 FOR COMMUNICATIONS SYMBOL LIST, GENERAL NOTES AND ABBREVIATIONS.

1 SUBWAY MEZZANINE LEVEL - COMMUNICATIONS PLAN

1/8" = 1'-0"

DESIGN BY:										
DRAWN BY:										
CHECKED BY:										
APPROVED BY:		4	7/3/2023	ISSUED FOR BID	EM	EM	JM			
CDOT/APPROVED BY:		NO.	DATE	REVISIONS	DES.	DRW.	CHK.	DCCO	CDOT	

TRANSYSTEMS
222 SOUTH RIVERSIDE PLAZA SUITE 610
CHICAGO, ILLINOIS 60606

SKIDMORE, OWINGS & MERRILL LLP
224 SOUTH MICHIGAN AVENUE, SUITE 1000
CHICAGO, ILLINOIS 60604

FACET ENGINEERING
4316 NORTH ELSTON AVENUE
CHICAGO, ILLINOIS 60641

CHICAGO DEPARTMENT OF TRANSPORTATION
DIVISION OF ENGINEERING

STATE / LAKE LOOP ELEVATED STATION
200 NORTH STATE STREET, CHICAGO, IL 60601

SPEC. NO.

LAKE/RANDOLPH SUBWAY MEZZANINE MODIFIED COMMUNICATIONS PLAN

DRAWING NO. TS-101

CDOT PROJECT D-1-209 | DATE: 9/9/2022 | REVISION NO.

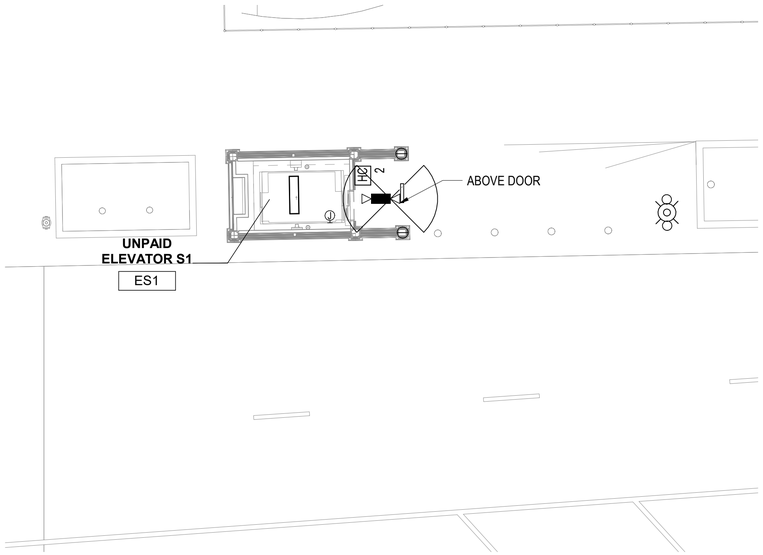

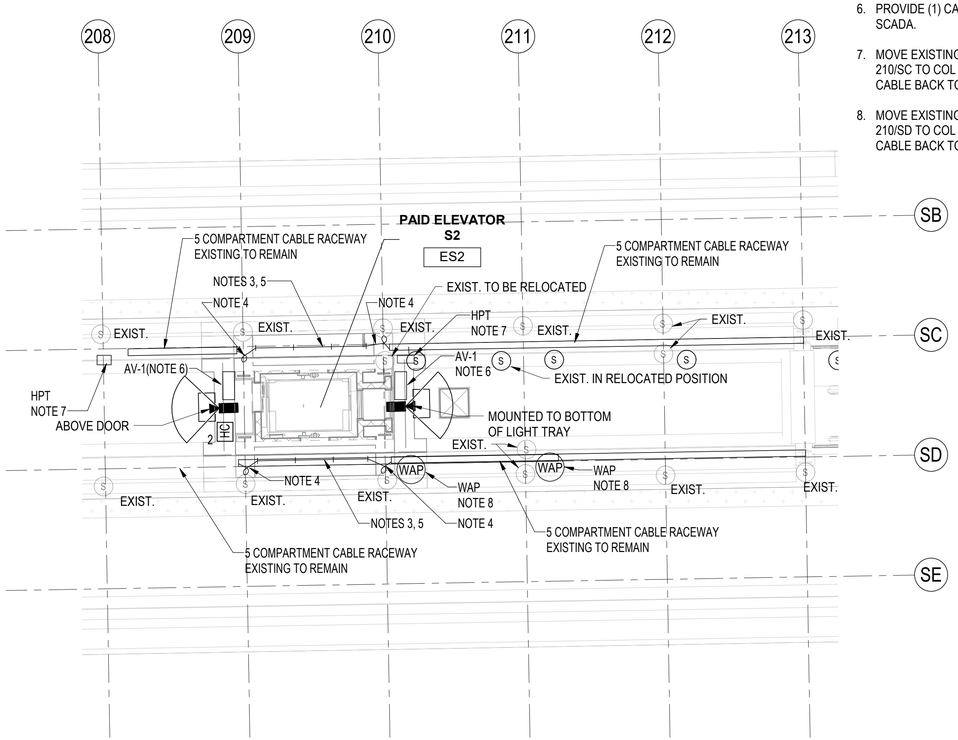

NOTES:

1. SEE DRAWING T-001 FOR COMMUNICATIONS SYMBOL LIST, GENERAL NOTES AND ABBREVIATIONS.
2. REFER TO ELECTRICAL DRAWING ES-102 FOR LIGHT TRAY MODIFICATION WORK. LIGHT TRAY MODIFICATIONS TO INCLUDE LIGHTING AND COMMUNICATIONS WORK AS DESCRIBED ON THIS DRAWING AND DRAWING ES-102.
3. DEMOLISH EXISTING CABLE TRAY SECTION BETWEEN COLUMN LINES 209 AND 210 WHERE CONFLICTING WITH PROPOSED ELEVATOR.
4. TRANSITION FROM THE EXISTING 5 SECTION RACEWAY, AROUND THE COLUMN TO THE PROPOSED 5 CONDUITS ATTACHED TO THE UNDERSIDE OF THE STRUCTURAL BEAM WITH A 1" FLEXIBLE CONDUIT.
5. ATTACH (5) 1" CONDUITS FOR EACH OF THE RACEWAY SECTIONS, SUPPORTED VIA UNISTRUT, TO THE UNDERSIDE OF THE BEAM BETWEEN COLUMN LINES 209 AND 210 AS SHOWN.
6. PROVIDE (1) CAT6 CABLE IN 1" C TO COMMUNICATIONS ROOM SCADA.
7. MOVE EXISTING CUSTOMER ASSISTANT CALL BUTTON FROM COL 210/SC TO COL 208/SC. EXTEND CONDUIT AND PROVIDE NEW CABLE BACK TO COMMUNICATIONS ROOM.
8. MOVE EXISTING WIRELESS ACCES POINT (WAP) FROM COL 210/SD TO COL 211/SD. EXTEND CONDUIT AND PROVIDE NEW CABLE BACK TO COMMUNICATIONS ROOM.

1 SUBWAY STREET LEVEL - COMMUNICATIONS PLAN
1/8" = 1'-0"

2 SUBWAY PLATFORM LEVEL - COMMUNICATIONS PLAN
1/8" = 1'-0"

DESIGN BY:									
DRAWN BY:									
CHECKED BY:									
APPROVED BY:		4	7/3/2023	ISSUED FOR BID	EM	EM	JM		
CDOT/APPROVED BY:		NO.	DATE	REVISIONS	DES.	DRW.	CHK.	DCCO	CDOT

TRANSYSTEMS
222 SOUTH RIVERSIDE PLAZA SUITE 610
CHICAGO, ILLINOIS 60606

SKIDMORE, OWINGS & MERRILL LLP
224 SOUTH MICHIGAN AVENUE, SUITE 1000
CHICAGO, ILLINOIS 60604

FACET ENGINEERING
4316 NORTH ELSTON AVENUE
CHICAGO, ILLINOIS 60641

CHICAGO DEPARTMENT OF TRANSPORTATION
DIVISION OF ENGINEERING

STATE / LAKE LOOP ELEVATED STATION
200 NORTH STATE STREET, CHICAGO, IL 60601

LAKE/RANDOLPH SUBWAY STREET LEVEL AND PLATFORM MODIFIED COMMUNICATIONS PLANS

CDOT PROJECT D-1-209 | DATE: 9/9/2022

SPEC. NO.

DRAWING NO. TS-102

REVISION NO.

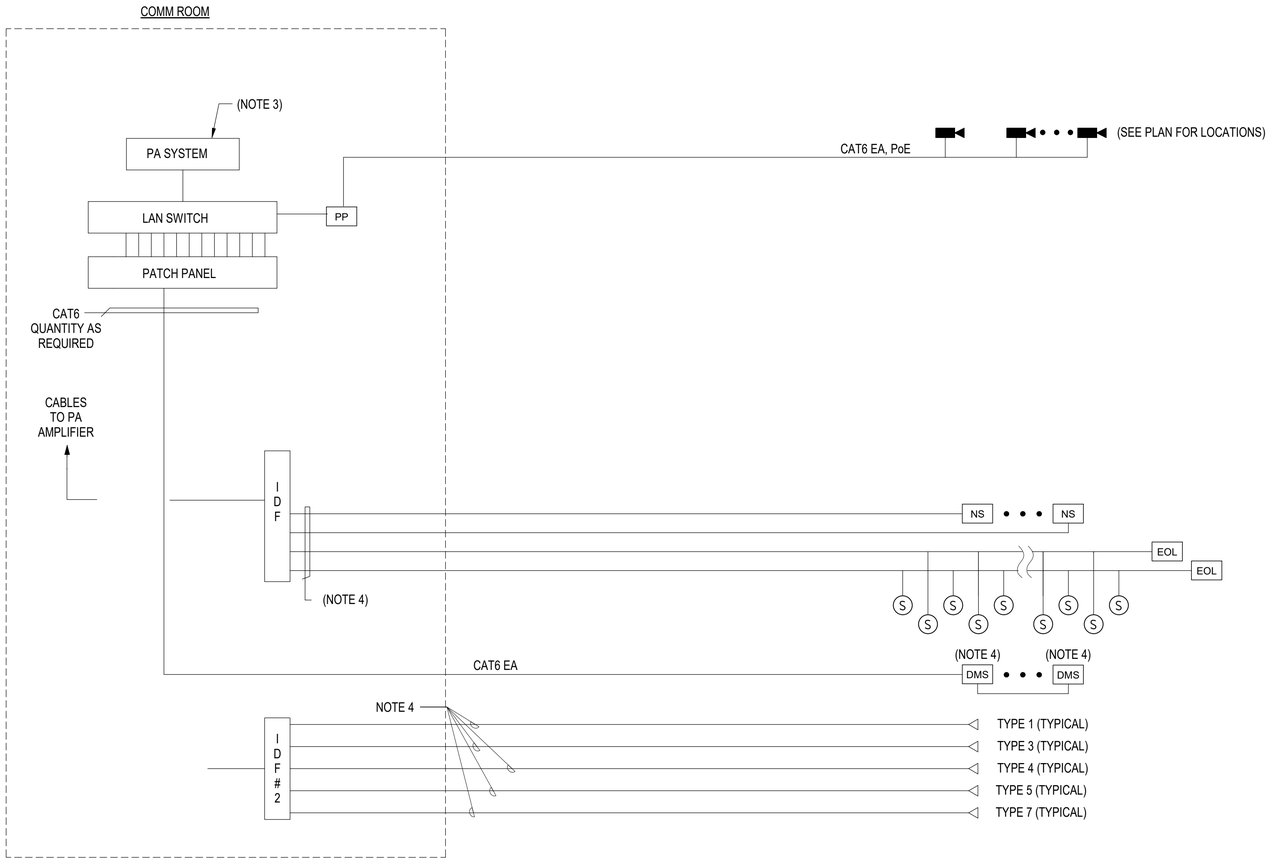

NOTES:

1. SEE DRAWING T-001 FOR COMMUNICATIONS SYMBOL LIST, GENERAL NOTES AND ABBREVIATIONS.

DESIGN BY:										
DRAWN BY:										
CHECKED BY:										
APPROVED BY:		4	7/3/2023	ISSUED FOR BID	JM	EM	SM			
CDOT/APPROVED BY:		NO.	DATE	REVISIONS	DES.	DRW.	CHK.	DCCO	CDOT	

TRANSYSTEMS
222 SOUTH RIVERSIDE PLAZA SUITE 610
CHICAGO, ILLINOIS 60606

SKIDMORE, OWINGS & MERRILL LLP
224 SOUTH MICHIGAN AVENUE, SUITE 1000
CHICAGO, ILLINOIS 60604

FACET ENGINEERING
4316 NORTH ELSTON AVENUE
CHICAGO, ILLINOIS 60641

CHICAGO DEPARTMENT
OF TRANSPORTATION
DIVISION OF ENGINEERING

STATE / LAKE LOOP ELEVATED STATION
200 NORTH STATE STREET, CHICAGO, IL 60601

LAKE/RANDOLPH SUBWAY COMMUNICATIONS NETWORK DIAGRAM

CDOT PROJECT D-1-209

DATE: 9/9/2022

SPEC. NO.

DRAWING NO. TS-601

REVISION NO.

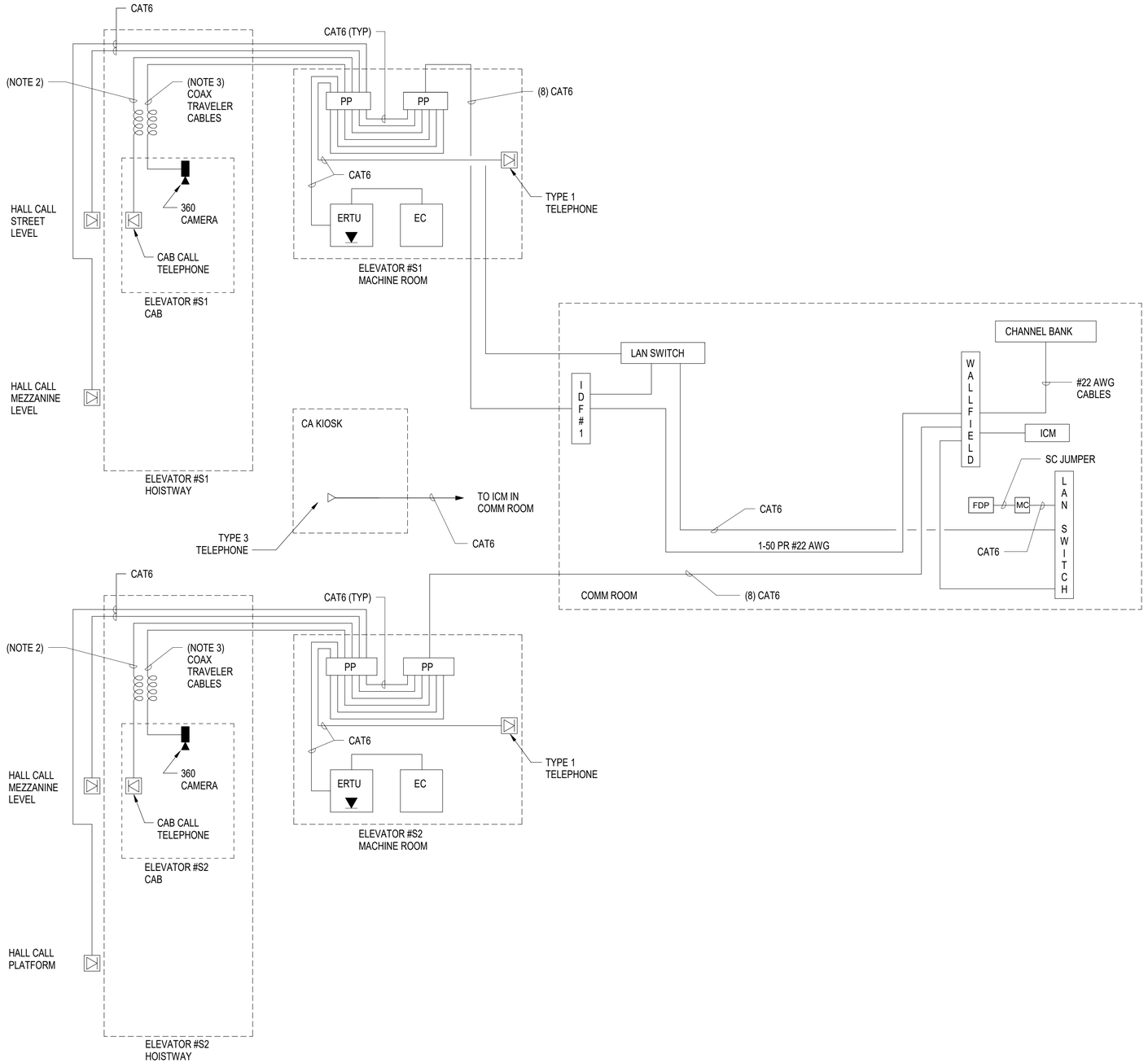

1 ELEVATOR ONE LINE DIAGRAM SUBWAY

NTS

NOTES:

1. SEE DRAWING T-001 FOR COMMUNICATIONS SYMBOL LIST, GENERAL NOTES AND ABBREVIATIONS.
2. PROVIDE SHIELDED TWISTED PAIR NO. 20 AWG TRAVELER CBLE.
3. PROVIDE COAX TO CAT6 CONVERTER AT TOP AND BOTTOM OF TRAVELER CABLE.

DESIGN BY:										
DRAWN BY:										
CHECKED BY:										
APPROVED BY:		4	7/3/2023	ISSUED FOR BID	JM	EM	SM			
CDOT/APPROVED BY:		NO.	DATE	REVISIONS	DES.	DRW.	CHK.	DCCO	CDOT	

TRANSYSTEMS
222 SOUTH RIVERSIDE PLAZA SUITE 610
CHICAGO, ILLINOIS 60606

SKIDMORE, OWINGS & MERRILL LLP
224 SOUTH MICHIGAN AVENUE, SUITE 1000
CHICAGO, ILLINOIS 60604

FACET ENGINEERING
4316 NORTH ELSTON AVENUE
CHICAGO, ILLINOIS 60641

CHICAGO DEPARTMENT
OF TRANSPORTATION
DIVISION OF ENGINEERING

STATE / LAKE LOOP ELEVATED STATION
200 NORTH STATE STREET, CHICAGO, IL 60601

LAKE/RANDOLPH SUBWAY COMMUNICATIONS
ELEVATOR DIAGRAM

CDOT PROJECT D-1-209

DATE: 9/9/2022

SPEC. NO.

DRAWING NO.
TS-602

REVISION NO.

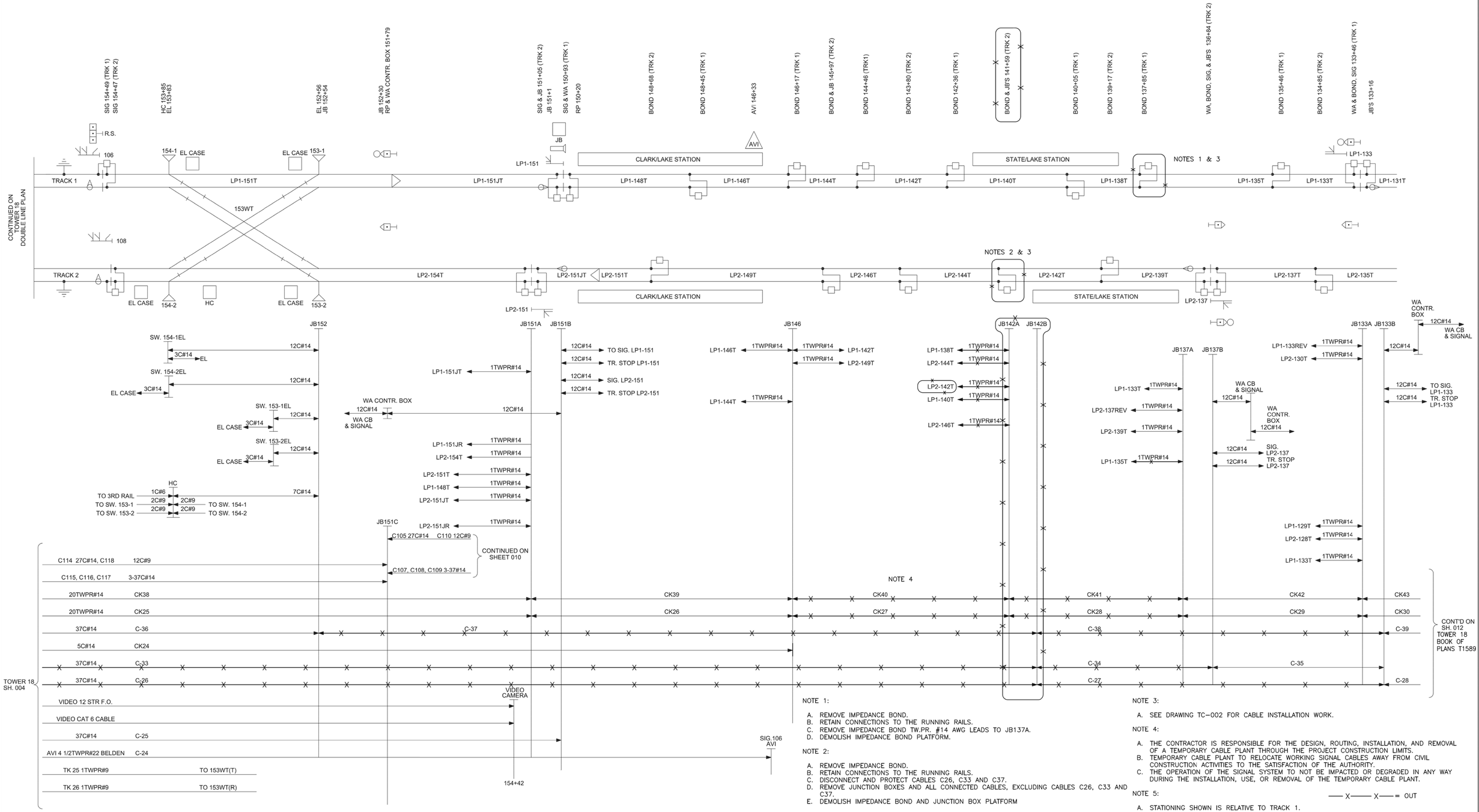

NOTE 1:

A. REMOVE IMPEDANCE BOND.
B. RETAIN CONNECTIONS TO THE RUNNING RAILS.
C. REMOVE IMPEDANCE BOND TW.PR. #14 AWG LEADS TO JB137A.
D. DEMOLISH IMPEDANCE BOND PLATFORM.

NOTE 2:

A. REMOVE IMPEDANCE BOND.
B. RETAIN CONNECTIONS TO THE RUNNING RAILS.
C. DISCONNECT AND PROTECT CABLES C26, C33 AND C37.
D. REMOVE JUNCTION BOXES AND ALL CONNECTED CABLES, EXCLUDING CABLES C26, C33 AND C37.
E. DEMOLISH IMPEDANCE BOND AND JUNCTION BOX PLATFORM

NOTE 3:

A. SEE DRAWING TC-002 FOR CABLE INSTALLATION WORK.

NOTE 4:

A. THE CONTRACTOR IS RESPONSIBLE FOR THE DESIGN, ROUTING, INSTALLATION, AND REMOVAL OF A TEMPORARY CABLE PLANT THROUGH THE PROJECT CONSTRUCTION LIMITS.
B. TEMPORARY CABLE PLANT TO RELOCATE WORKING SIGNAL CABLES AWAY FROM CIVIL CONSTRUCTION ACTIVITIES TO THE SATISFACTION OF THE AUTHORITY.
C. THE OPERATION OF THE SIGNAL SYSTEM TO NOT BE IMPACTED OR DEGRADED IN ANY WAY DURING THE INSTALLATION, USE, OR REMOVAL OF THE TEMPORARY CABLE PLANT.

NOTE 5:

—— X —— X —— = OUT

A. STATIONING SHOWN IS RELATIVE TO TRACK 1.

DESIGN BY:		4	7/3/2023	ISSUED FOR BID	MAS	MAS	ECB			
DRAWN BY:		3	4/28/2023	JB PLATFORM RELOCATION	MAS	MAS	ECB			
CHECKED BY:		2	9/2/2022	100% ADDENDUM 1	MAS	MAS	ECB			
APPROVED BY:		1	6/17/2022	100% DESIGN SUBMITTAL	MAS	MAS	JFS			
CDOT/APPROVED BY:		NO.	DATE	REVISIONS	DES.	DRW.	CHK.	DCCO	CDOT	

TRANSYSTEMS
222 SOUTH RIVERSIDE PLAZA SUITE 610
CHICAGO, ILLINOIS 60606

GANNETT FLEMING

CHICAGO DEPARTMENT OF TRANSPORTATION
DIVISION OF ENGINEERING

STATE / LAKE LOOP ELEVATED STATION
200 NORTH STATE STREET, CHICAGO, IL 60601

SPEC. NO.

TRAIN CONTROL TRACK AND CABLE PLAN REMOVALS

DRAWING NO.
TC-001

CDOT PROJECT D-1-209 | DATE: 4/28/2023 | REVISION NO. CR

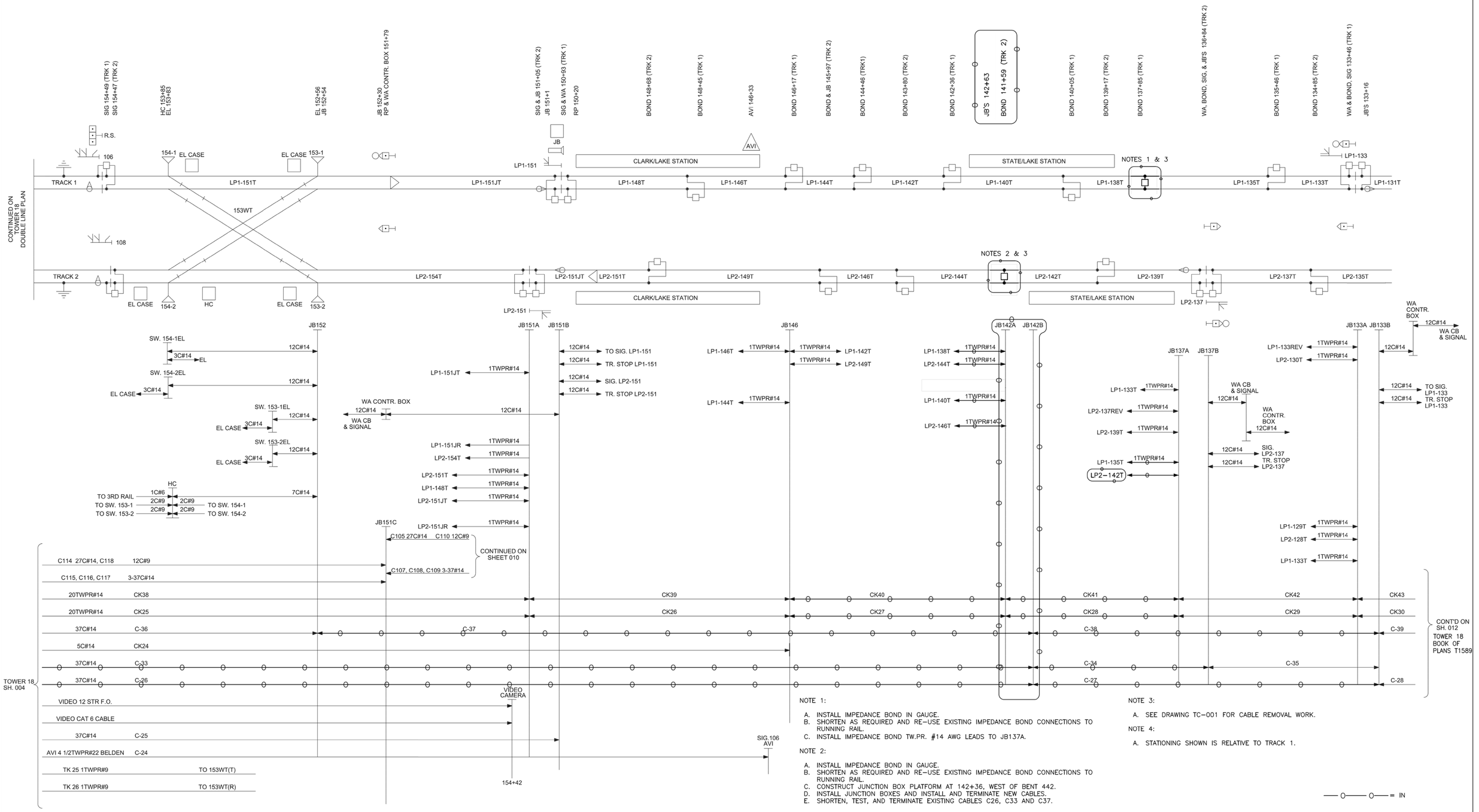

DESIGN BY:		4	7/3/2023	ISSUED FOR BID	MAS	MAS	ECB			
DRAWN BY:		3	4/28/2023	JB PLATFORM RELOCATION	MAS	MAS	ECB			
CHECKED BY:		2	9/2/2022	100% ADDENDUM 1	MAS	MAS	ECB			
APPROVED BY:		1	6/17/2022	100% DESIGN SUBMITTAL	MAS	MAS	JFS			
CDOT/APPROVED BY:		NO.	DATE	REVISIONS	DES.	DRW.	CHK.	DCCO	CDOT	

TRANSYSTEMS
222 SOUTH RIVERSIDE PLAZA SUITE 610
CHICAGO, ILLINOIS 60606

GANNETT FLEMING

CHICAGO DEPARTMENT OF TRANSPORTATION
DIVISION OF ENGINEERING

STATE / LAKE LOOP ELEVATED STATION
200 NORTH STATE STREET, CHICAGO, IL 60601

SPEC. NO.

TRAIN CONTROL TRACK AND CABLE PLAN INSTALLATIONS

DRAWING NO.
TC-002

CDOT PROJECT D-1-209

DATE: 4/28/2023

REVISION NO. CR

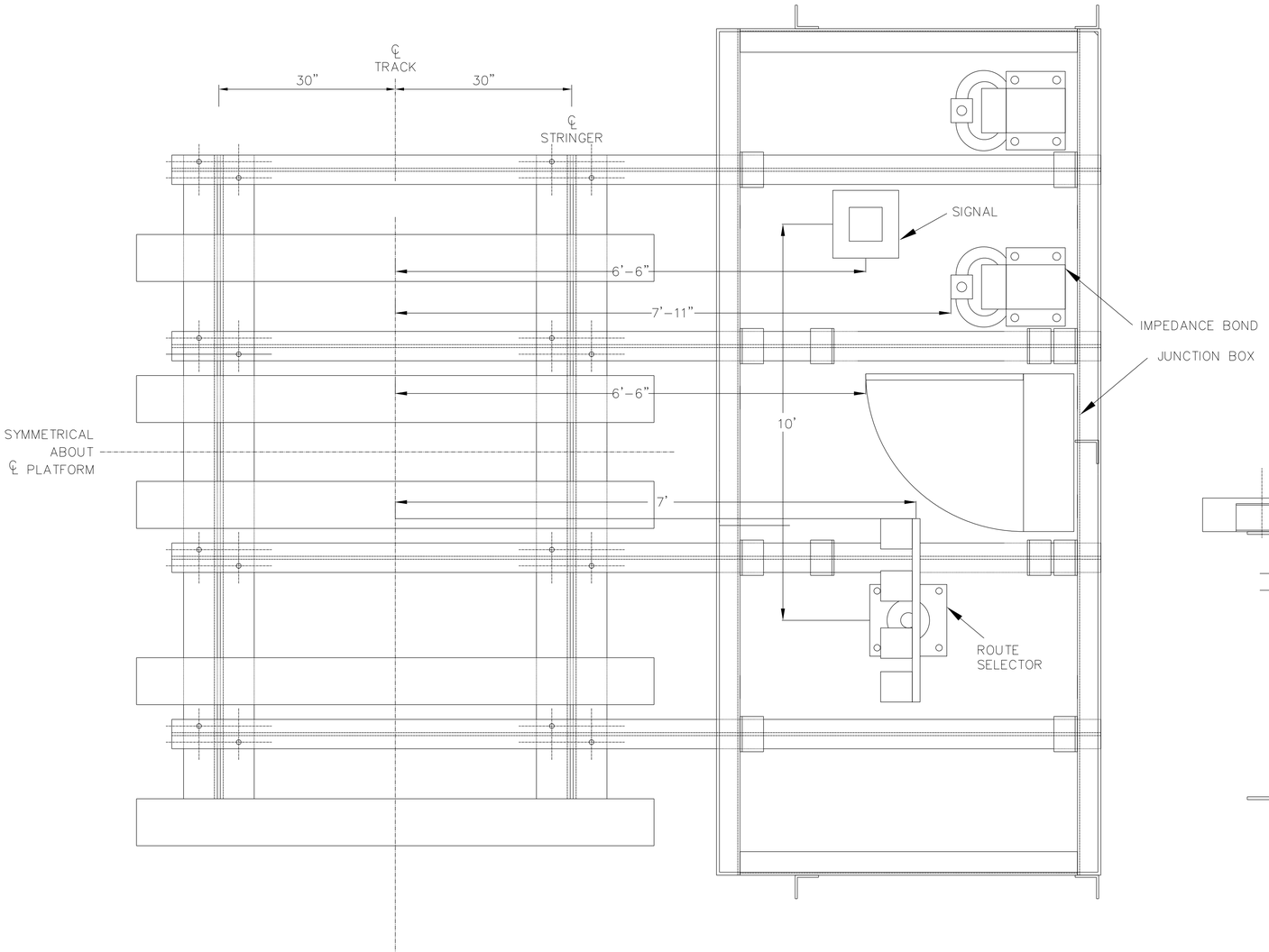

PLAN

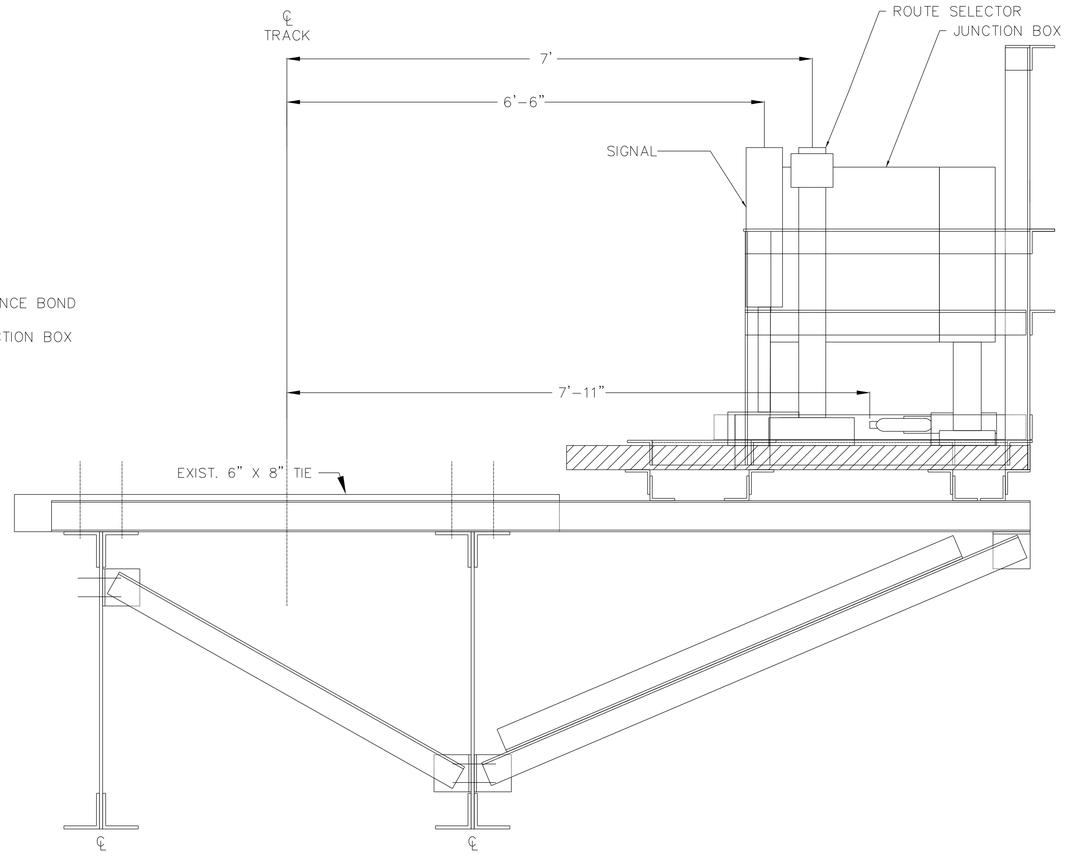

NOTES:

1) DO NOT POSITION THE PLATFORM WITHIN THE MIDDLE THIRD OF A TRACK STRINGER SPAN.
2) DO NOT STRADDLE AN EXPANSION BENT.

DESIGN BY:		4	7/3/2023	ISSUED FOR BID	MAS	MAS	ECB			
DRAWN BY:		3	4/28/2023	JB PLATFORM RELOCATION	MAS	MAS	ECB			
CHECKED BY:		2	9/2/2022	100% ADDENDUM 1	MAS	MAS	ECB			
APPROVED BY:		1	6/17/2022	100% DESIGN SUBMITTAL	MAS	MAS	JFS			
CDOT/APPROVED BY:		NO.	DATE	REVISIONS	DES.	DRW.	CHK.	DCCO	CDOT	

TRANSYSTEMS
222 SOUTH RIVERSIDE PLAZA SUITE 610
CHICAGO, ILLINOIS 60606

GANNETT FLEMING

CHICAGO DEPARTMENT OF TRANSPORTATION
DIVISION OF ENGINEERING

STATE / LAKE LOOP ELEVATED STATION
200 NORTH STATE STREET, CHICAGO, IL 60601

TYPICAL SIGNAL EQUIPMENT PLATFORM LAYOUT

SPEC. NO.

DRAWING NO. TC-003

CDOT PROJECT D-1-209 | DATE: 4/28/2023 | REVISION NO. CR

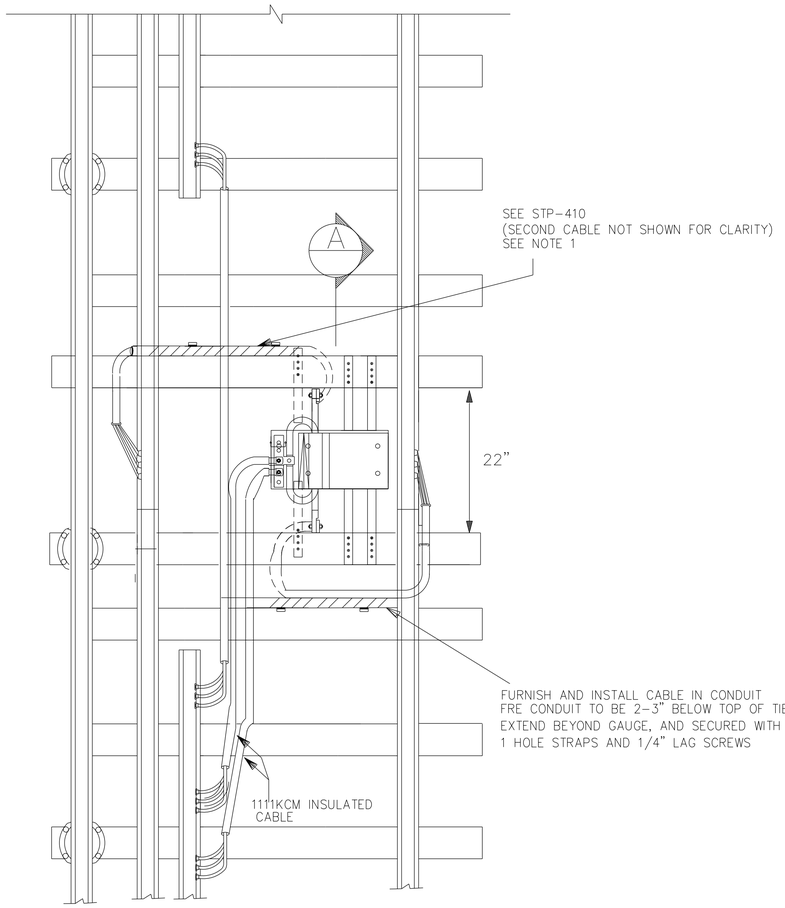

1 DETAIL OF IMPEDANCE BOND

NOTES:

1. 2" X 8" X 8' WOOD FLASH BOARD REQUIRED AT LOCATIONS WHERE THIRD RAIL IS ON THE SAME SIDE OF THE TRACK AS THE IMPEDANCE BOND.
2. DAP TIMBER STRINGERS SO TOP OF FIBERGLASS WALK IS FLUSH.
3. UNDERWALKWAY INSTALLATIONS ARE ONLY ALLOWED AT LOCATIONS ON CONTRACT DRAWINGS, OR WHEN APPROVED BY THE ENGINEER.
4. MINIMUM BENDING RADIUS SHALL BE IN ACCORDANCE WITH CABLE SPECIFICATION.
5. FOR CABLE DETAILS SEE STP-410 AND STP-86
6. CROSSED CABLES NOT ALLOWED
7. BONDS SHALL BE IN SAME DIRECTION/ACROSS FROM EACH OTHER

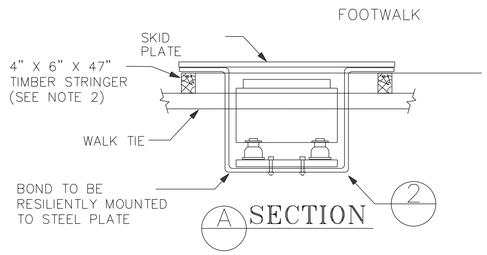

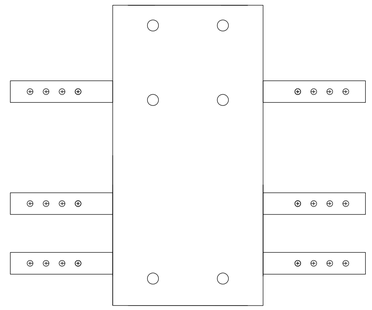

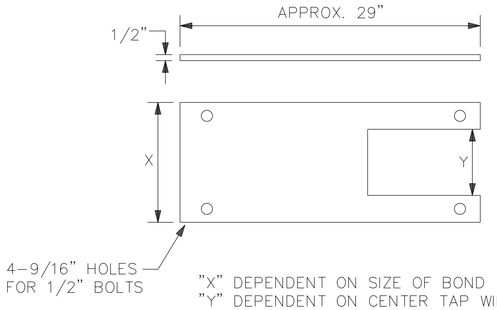

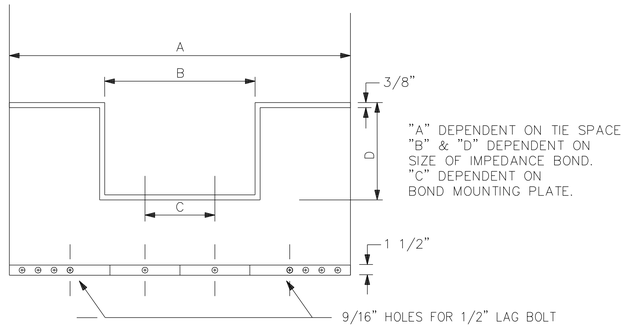

2 DETAIL OF IMPEDANCE BOND MOUNTING BRACKET

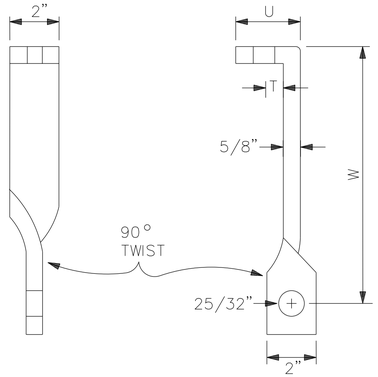

DISTANCE "U" TO BE DETERMINED BY DEPTH OF CENTER TAP. CENTER TAP BAR TO BE COPPER BUS BAR.
DISTANCE "T" TO BE THE SAME ON CENTER TAP BAR AND BOND PLATE
DISTANCE "W" TO BE 8" FOR STRUCTURE MOUNTING.
DISTANCE "W" TO BE 4" FOR BALLAST MOUNTING WHERE REQUIRED.

4 DETAIL OF CENTER TAP BAR

DESIGN BY:		4	7/3/2023	ISSUED FOR BID	MAS	MAS	ECB			
DRAWN BY:		3	4/28/2023	JB PLATFORM RELOCATION	MAS	MAS	ECB			
CHECKED BY:		2	9/2/2022	100% ADDENDUM 1	MAS	MAS	ECB			
APPROVED BY:		1	6/17/2022	100% DESIGN SUBMITTAL	MAS	MAS	JFS			
CDOT/APPROVED BY:		NO.	DATE	REVISIONS	DES.	DRW.	CHK.	DCCO	CDOT	

TRANSYSTEMS
222 SOUTH RIVERSIDE PLAZA SUITE 610
CHICAGO, ILLINOIS 60606

GANNETT FLEMING

CHICAGO DEPARTMENT OF TRANSPORTATION
DIVISION OF ENGINEERING

STATE / LAKE LOOP ELEVATED STATION
200 NORTH STATE STREET, CHICAGO, IL 60601

TYPICAL IMPEDANCE BOND IN GAUGE LAYOUT

CDOT PROJECT D-1-209 | DATE: 4/28/2023

SPEC. NO.

DRAWING NO. TC-004

REVISION NO. CR

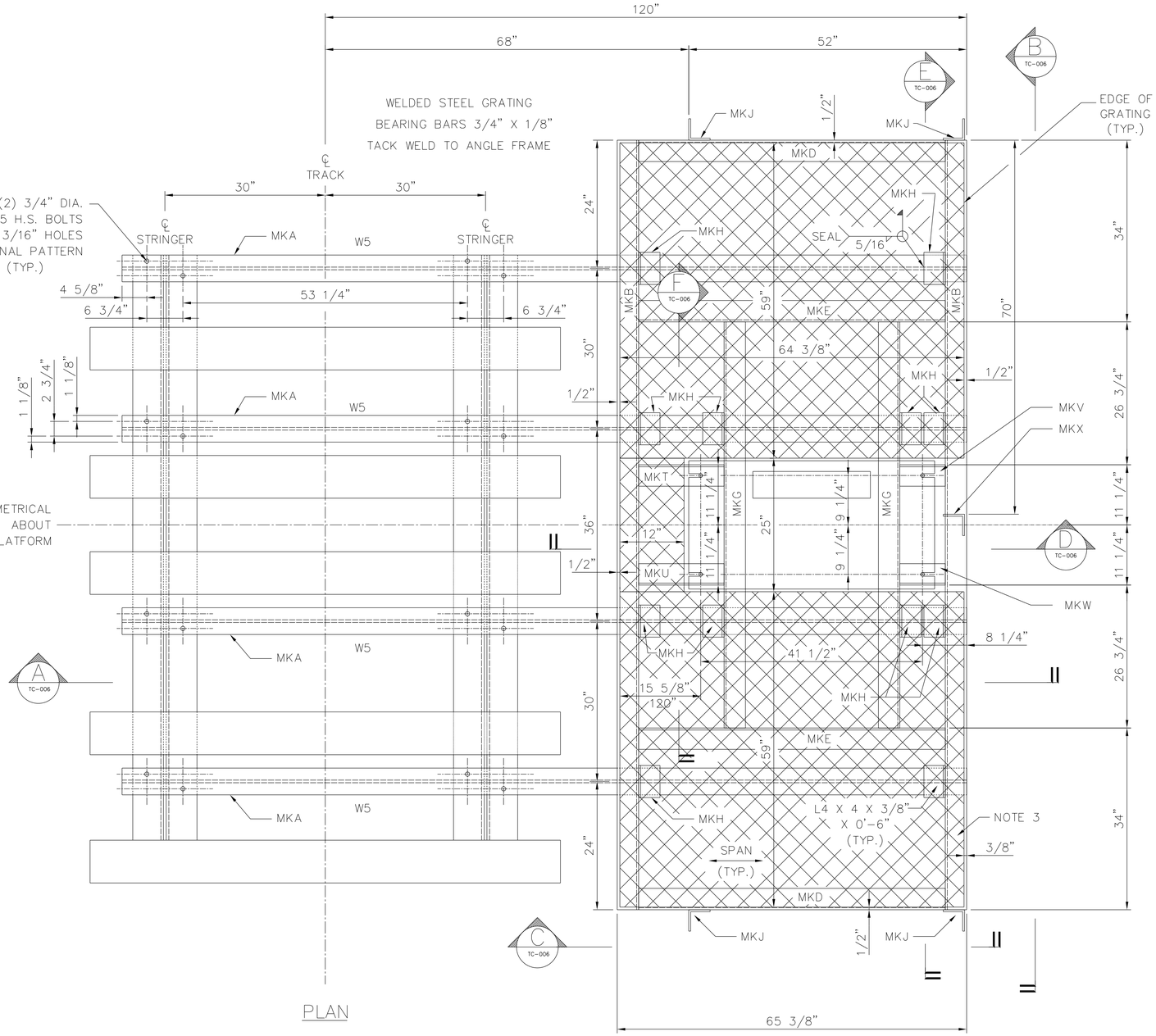

PLAN

PIECE MARK	SHAPE	LENGTH	NO. REQD	COMMENTS
MK A	W5 X 16	13'-2"	4	*
MK B	L4 X 4 X 3/8"	12'-0"	2	*
MK C	*	*	*	*
MK D	L4 X 4 3/8"	4'-11 3/8"	2	*
MK E	L4 X 4 X 3/8"	4'-11 3/8"	2	*
MK F	L4 X 4 X 3/8"	4'-3 5/8"	2	*
MK G	L4 X 4 X 3/8"	6'-4"	2	*
MK H	L4 X 4 X 3/8"	0'-6"	12	*
MK J	L4 X 4 3/8"	3'-10 3/4"	4	SIDE RAILINGS ONLY
MK K	L4 X 4 X 3/8"	12'-7 1/4"	2	SIDE RAILINGS ONLY
MK L	L4 X 4 X 3/8"	4'-2 3/8"	2	SIDE RAILINGS ONLY
MK M	PL 3/8" X 4"	12'-7 1/4"	1	SIDE RAILINGS ONLY
MK N	PL 3/8" X 4"	4'-3"	2	SIDE RAILINGS ONLY
MK O	WT6 X 20	0'-6"	4	*
MK P	WT6 X 20	0'-6"	12	*
MK R.2	L4 X 4 X 3/8"	7'-10"	4	*
MK R	L4 X 4 X 3/8"	5'-6"	4	CUT AS REQD. IN FIELD
MK S	L4 X 4 X 3/8"	8'-0"	3	CUT AS REQD. IN FIELD
MK T	L4 X 4 X 3/8"	1'-4"	1	OPP. HAND OF MK U
MK U	L4 X 4 X 3/8"	1'-4"	1	OPP. HAND OF MK T
MK V	L4 X 4 X 3/8"	8 1/2"	1	OPP. HAND OF MK W
MK W	L4 X 4 X 3/8"	8 1/2"	1	OPP. HAND OF MK V
MK X	L4 X 4 X 3/8"	3'-6"	1	SIDE RAILINGS ONLY
*	*	*	*	*
*	*	*	*	*
*	*	*	*	*
*	*	*	*	*

NOTES:

1) DO NOT POSITION THE PLATFORM WITHIN THE MIDDLE THIRD OF A TRACK STRINGER SPAN.
2) DO NOT STRADDLE AN EXPANSION BENT.
3) SEE GRATING FRAME DETAILS ON DRAWING SHEET TC-007.

		NO.	DATE	REVISIONS	DES.	DRW.	CHK.	DCCO	CDOT
DESIGN BY:		4	7/3/2023	ISSUED FOR BID	MAS	MAS	ECB		
DRAWN BY:		3	4/28/2023	JB PLATFORM RELOCATION	MAS	MAS	ECB		
CHECKED BY:		2	9/2/2022	100% ADDENDUM 1	MAS	MAS	ECB		
APPROVED BY:		1	6/17/2022	100% DESIGN SUBMITTAL	MAS	MAS	JFS		
CDOT/APPROVED BY:									

TRANSYSTEMS
222 SOUTH RIVERSIDE PLAZA SUITE 610
CHICAGO, ILLINOIS 60606

GANNETT FLEMING

CHICAGO DEPARTMENT OF TRANSPORTATION
DIVISION OF ENGINEERING

STATE / LAKE LOOP ELEVATED STATION
200 NORTH STATE STREET, CHICAGO, IL 60601

TYPICAL JUNCTION BOX PLATFORM
1 OF 3

SPEC. NO.

DRAWING NO.
TC-005

CDOT PROJECT D-1-209

DATE: 4/28/2023

REVISION NO. CR

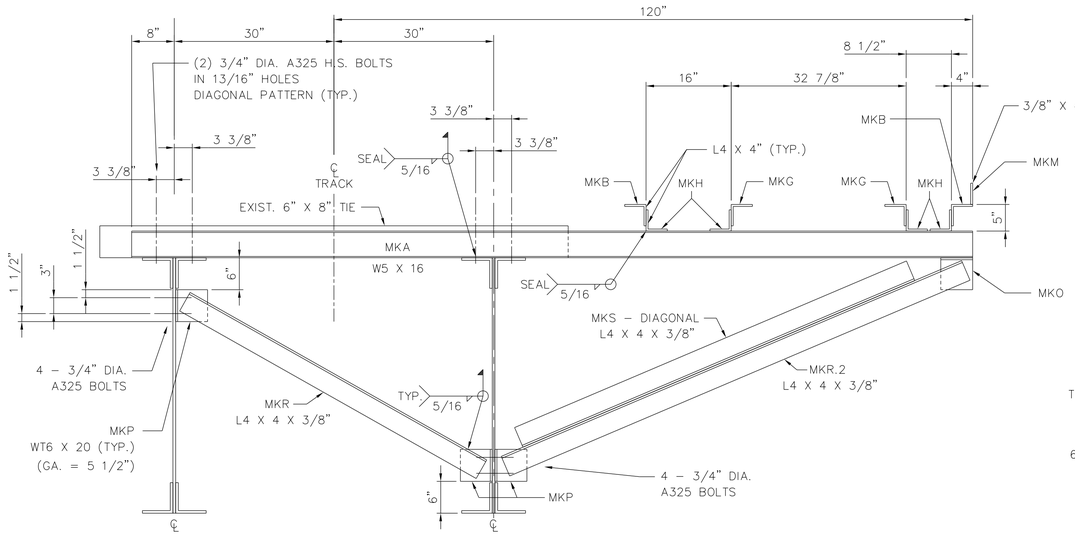

A SECTION TC-005

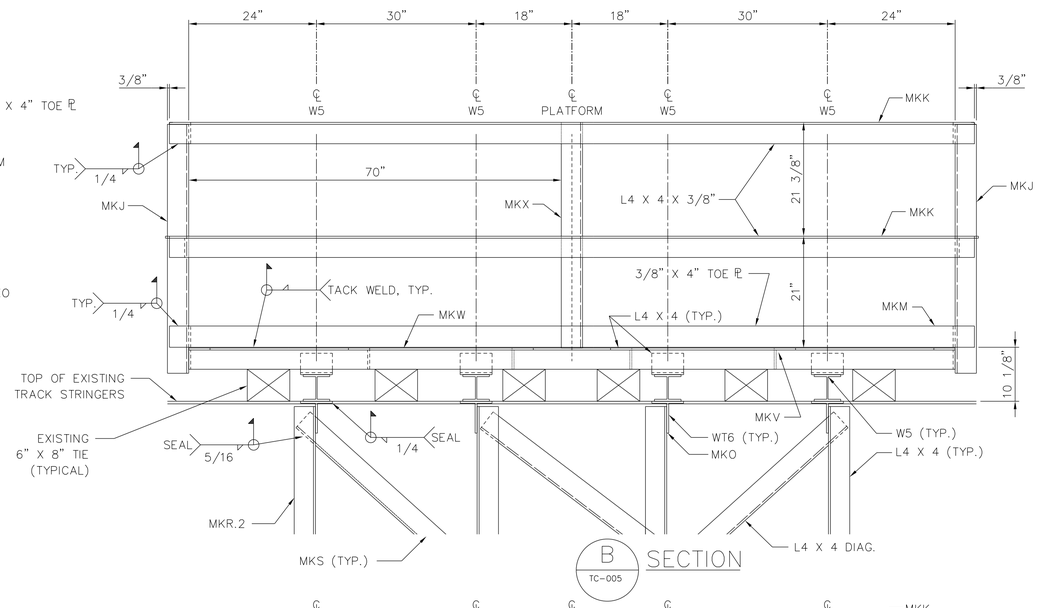

B SECTION TC-005

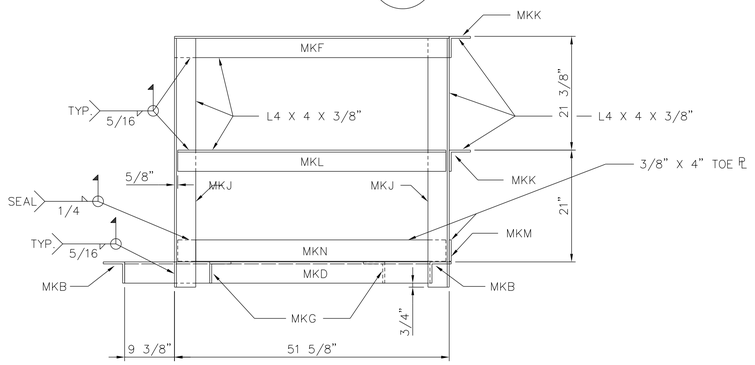

C SECTION TC-005

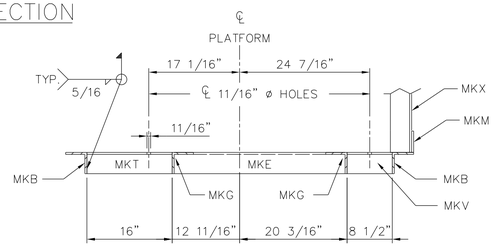

D SECTION TC-005 TC-007

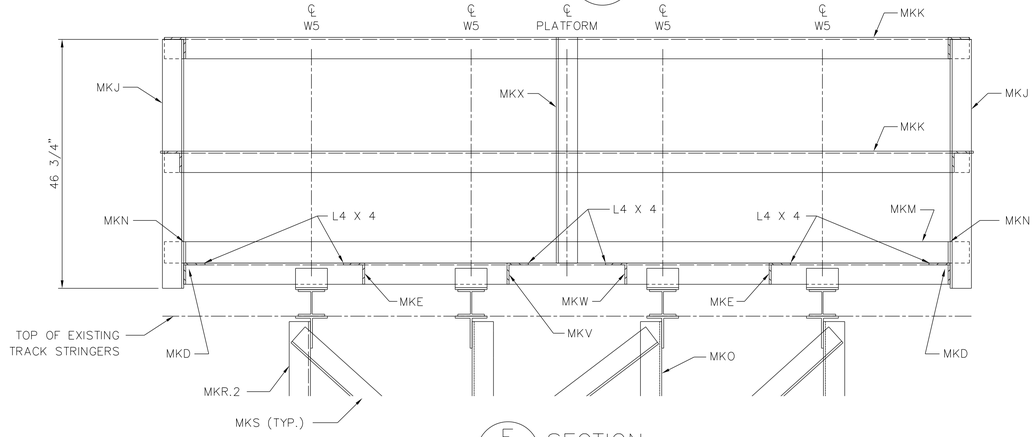

E SECTION TC-005

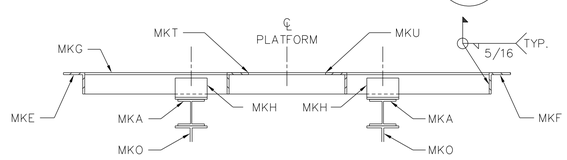

F SECTION TC-005 TC-007

DESIGN BY:		4	7/3/2023	ISSUED FOR BID	MAS	MAS	ECB			TranSystems TRANSYSTEMS 222 SOUTH RIVERSIDE PLAZA SUITE 610 CHICAGO, ILLINOIS 60606	GANNETT FLEMING
DRAWN BY:		3	4/28/2023	JB PLATFORM RELOCATION	MAS	MAS	ECB				
CHECKED BY:		2	9/2/2022	100% ADDENDUM 1	MAS	MAS	ECB				
APPROVED BY:		1	6/17/2022	100% DESIGN SUBMITTAL	MAS	MAS	JFS				
CDOT/APPROVED BY:		NO.	DATE	REVISIONS	DES.	DRW.	CHK.	DCCO	CDOT		

CDOT
CHICAGO DEPARTMENT OF TRANSPORTATION
DIVISION OF ENGINEERING

STATE / LAKE LOOP ELEVATED STATION
200 NORTH STATE STREET, CHICAGO, IL 60601

TYPICAL JUNCTION BOX PLATFORM
2 OF 3

CDOT PROJECT D-1-209 | DATE: 4/28/2023

SPEC. NO.

DRAWING NO.
TC-006

REVISION NO. CR

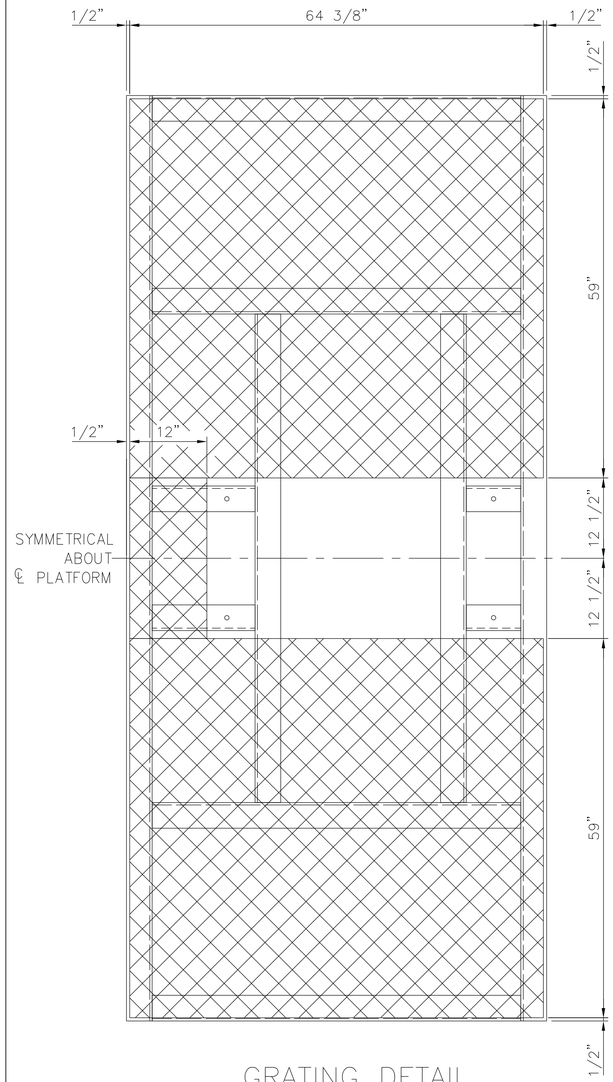

GRATING DETAIL

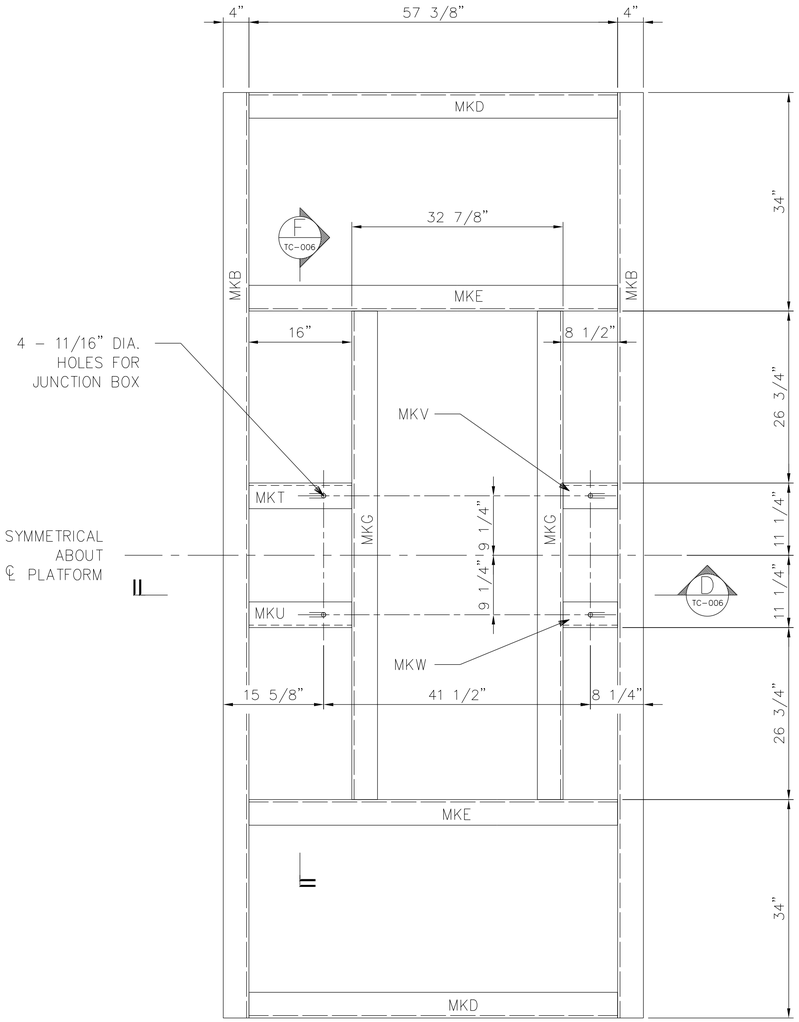

FRAME DETAIL

PIECE MARK	SHAPE	LENGTH	NO. REQD	COMMENTS
MK A	W5 X 16	13'–2"	4	*
MK B	L4 X 4 X 3/8"	12'–0"	2	*
MK C	*	*	*	*
MK D	L4 X 4 3/8"	4'–11 3/8"	2	*
MK E	L4 X 4 X 3/8"	4'–11 3/8"	2	*
MK F	L4 X 4 X 3/8"	4'–3 5/8"	2	*
MK G	L4 X 4 X 3/8"	6'–4"	2	*
MK H	L4 X 4 X 3/8"	0'–6"	12	*
MK J	L4 X 4 X 3/8"	3'–10 3/4"	4	SIDE RAILINGS ONLY
MK K	L4 X 4 X 3/8"	12'–7 1/4"	2	SIDE RAILINGS ONLY
MK L	L4 X 4 X 3/8"	4'–2 3/8"	2	SIDE RAILINGS ONLY
MK M	PL 3/8" X 4"	12'–7 1/4"	1	SIDE RAILINGS ONLY
MK N	PL 3/8" X 4"	4'–3"	2	SIDE RAILINGS ONLY
MK O	WT6 X 20	0'–6"	4	*
MK P	WT6 X 20	0'–6"	12	*
MK R.2	L4 X 4 X 3/8"	7'–10"	4	*
MK R	L4 X 4 X 3/8"	5'–6"	4	CUT AS REQD. IN FIELD
MK S	L4 X 4 X 3/8"	8'–0"	3	CUT AS REQD. IN FIELD
MK T	L4 X 4 X 3/8"	1'–4"	1	OPP. HAND OF MK U
MK U	L4 X 4 X 3/8"	1'–4"	1	OPP. HAND OF MK T
MK V	L4 X 4 X 3/8"	8 1/2"	1	OPP. HAND OF MK W
MK W	L4 X 4 X 3/8"	8 1/2"	1	OPP. HAND OF MK V
MK X	L4 X 4 X 3/8"	3'–6"	1	SIDE RAILINGS ONLY
*	*	*	*	*
*	*	*	*	*

NOTES:

1. ALL HOLES MADE INTO TRAIN CARRYING MEMBERS SHALL BE DRILLED FULL SIZE. BURNING AND REAMING OF HOLES SHALL NOT BE ALLOWED.
2. CONNECTIONS TO EXISTING TRACK STRINGERS SHALL BE 3/4" DIA. A325 H.S. BOLTS IN 13/16" DIA. HOLES.
3. DO NOT WELD PLATFORM TO STRUCTURE UNLESS OTHERWISE NOTED.
4. DO NOT POSITION THE PLATFORM WITHIN THE MIDDLE THIRD OF A TRACK STRINGER SPAN. DO NOT STRADDLE AN EXPANSION BENT.
5. ALL STEEL SHALL CONFORM TO ASTM A36.
6. WELDING SHALL CONFORM TO AWS D1.1

		NO.	DATE	REVISIONS	DES.	DRW.	CHK.	DCCO	CDOT
DESIGN BY:		4	7/3/2023	ISSUED FOR BID	MAS	MAS	ECB		
DRAWN BY:		3	4/28/2023	JB PLATFORM RELOCATION	MAS	MAS	ECB		
CHECKED BY:		2	9/2/2022	100% ADDENDUM 1	MAS	MAS	ECB		
APPROVED BY:		1	6/17/2022	100% DESIGN SUBMITTAL	MAS	MAS	JFS		
CDOT/APPROVED BY:									

TRANSYSTEMS
222 SOUTH RIVERSIDE PLAZA SUITE 610
CHICAGO, ILLINOIS 60606

GANNETT FLEMING

CHICAGO DEPARTMENT OF TRANSPORTATION
DIVISION OF ENGINEERING

STATE / LAKE LOOP ELEVATED STATION
200 NORTH STATE STREET, CHICAGO, IL 60601

TYPICAL JUNCTION BOX PLATFORM
3 OF 3

SPEC. NO.

DRAWING NO.
TC-007

CDOT PROJECT D-1-209 | DATE: 4/28/2023 | REVISION NO. CR

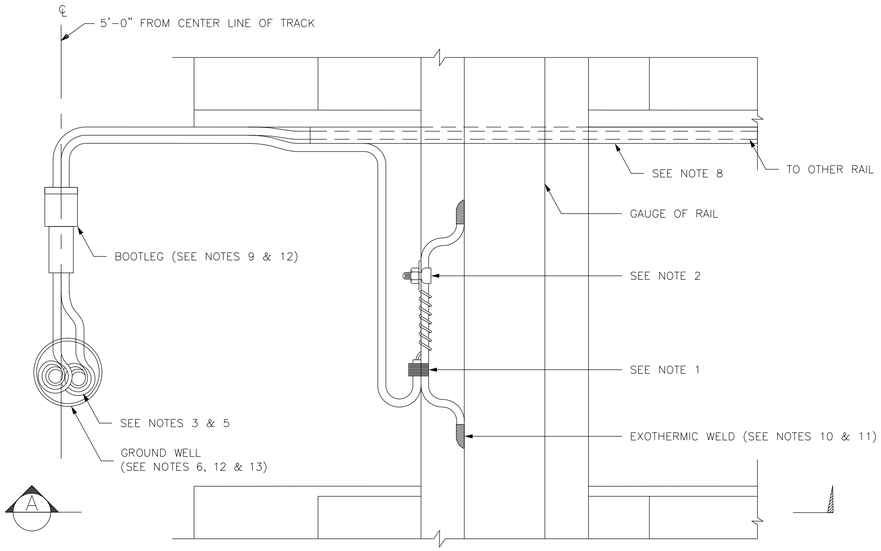

1 AC TRACK WIRE CONNECTION TO RUNNING RAIL PLAN VIEW
N.T.S.

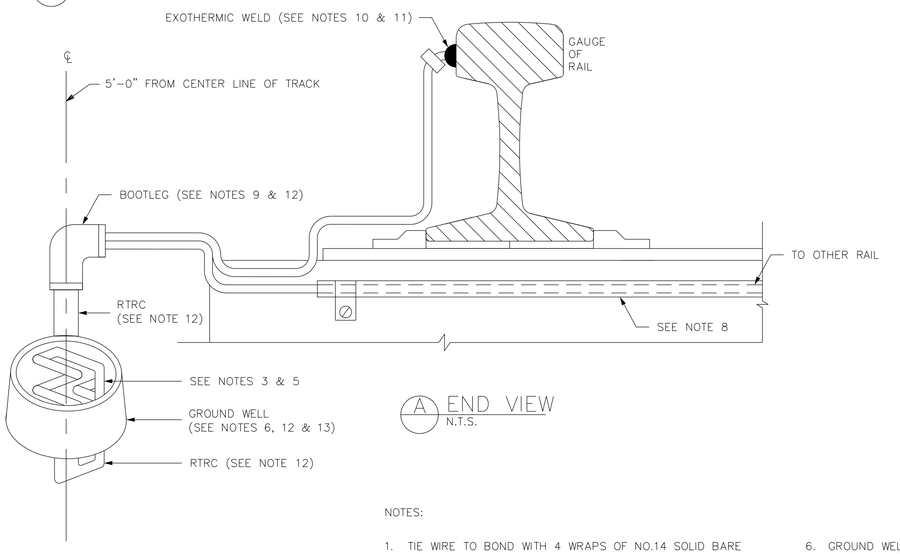

A END VIEW
N.T.S.

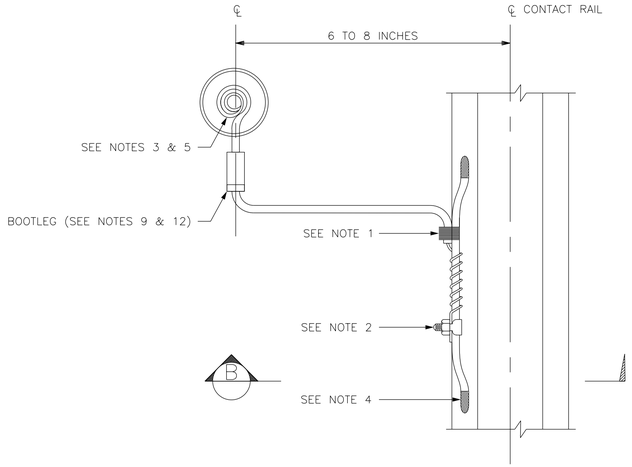

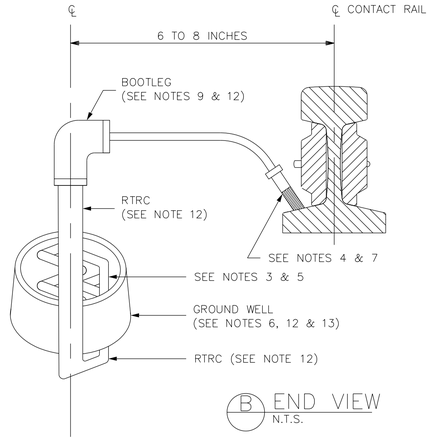

B END VIEW
N.T.S.

2 CONNECTION TO CONTACT RAIL PLAN VIEW
N.T.S.

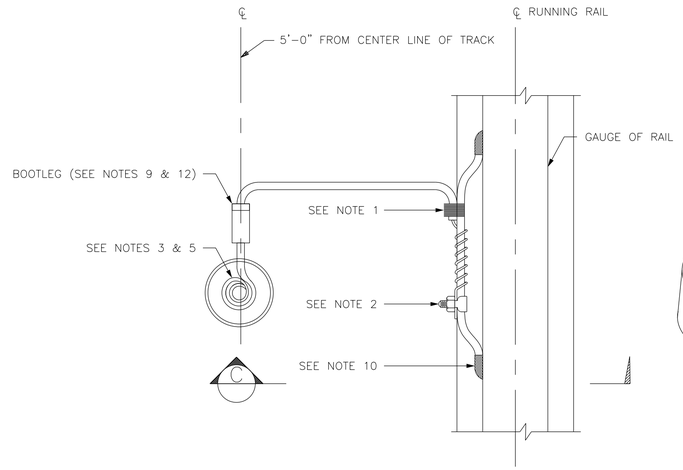

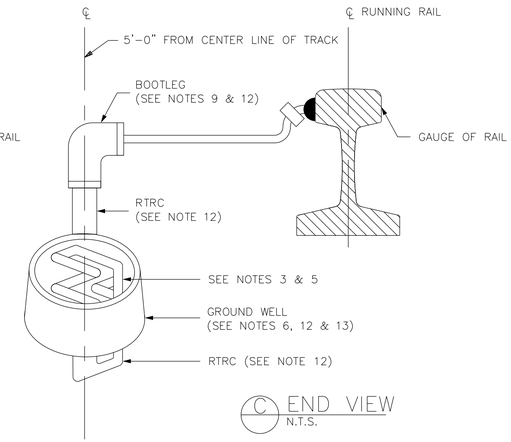

C END VIEW
N.T.S.

3 CONNECTION TO RUNNING RAIL PLAN VIEW
N.T.S.

NOTES:

1. TIE WIRE TO BOND WITH 4 WRAPS OF NO.14 SOLID BARE COPPER WIRE.
2. CONNECTOR – SPLIT BOLT.
3. #9 AWG INSULATED COPPER WIRE.
4. 2/0 ARC WELDED BOND (AREMA SIGNAL MANUAL PART 8.1.31)
5. 18" SLACK TO BE PROVIDED IN GROUND WELL.
6. GROUND WELL TO BE CARSON INDUSTRIES L-SERIES 910 LIGHT DUTY WITH FLUSH COVER OR EQUIVALENT. ALL UNITS TO BE TAN IN COLOR AND MOUNTED FLUSH WITH SURFACE.
7. CONNECTIONS TO CONTACT RAIL CANNOT BE MADE ON AN INCLINE OR WITHIN 3 FEET OF AN INCLINE.
8. 6' LENGTH OF – 1" RTRC CONDUIT MIN. 2" BELOW TOP OF TIE TO EXTEND BEYOND GAUGE AND SECURED WITH NON-CORROSIVE 1 HOLE STRAPS AND 1/4" LAG SCREWS.
9. BOOTLEG TO BE NON-METALLIC, LIQUID-TIGHT CONDUIT BLACK OR GRAY PVC JACKET WITH REINFORCED NYLOND BRAID WITH STRAIN RELEIF FITTING. BALLAST LOCATIONS ONLY.
10. 7" SIGNAL BOND (AREMA SIGNAL MANUAL PART 8.1.30).
11. HEATER CIRCUIT CONNECTIONS MUST BE SEPARATE AND NOT SHARED WITH AC TRACK CIRCUIT SIGNAL BONDS OR GROUND WELLS.
12. NOT REQUIRED FOR ELEVATED TRACK LOCATION CONNECTIONS.
13. NOT REQUIRED FOR DIRECT FIXATION LOCATION TRACK CONNECTIONS.

DESIGN BY:		4	7/3/2023	ISSUED FOR BID	MAS	MAS	ECB			
DRAWN BY:		3	4/28/2023	JB PLATFORM RELOCATION	MAS	MAS	ECB			
CHECKED BY:		2	9/2/2022	100% ADDENDUM 1	MAS	MAS	ECB			
APPROVED BY:		1	6/17/2022	100% DESIGN SUBMITTAL	MAS	MAS	JFS			
CDOT/APPROVED BY:		NO.	DATE	REVISIONS	DES.	DRW.	CHK.	DCCO	CDOT	

TRANSYSTEMS
222 SOUTH RIVERSIDE PLAZA SUITE 610
CHICAGO, ILLINOIS 60606

GANNETT FLEMING

CHICAGO DEPARTMENT OF TRANSPORTATION
DIVISION OF ENGINEERING

STATE / LAKE LOOP ELEVATED STATION
200 NORTH STATE STREET, CHICAGO, IL 60601

TYPICAL RAIL CONNECTION AND BONDING DETAILS

SPEC. NO.

DRAWING NO.
TC-008

CDOT PROJECT D-1-209

DATE: 4/28/2023

REVISION NO. CR

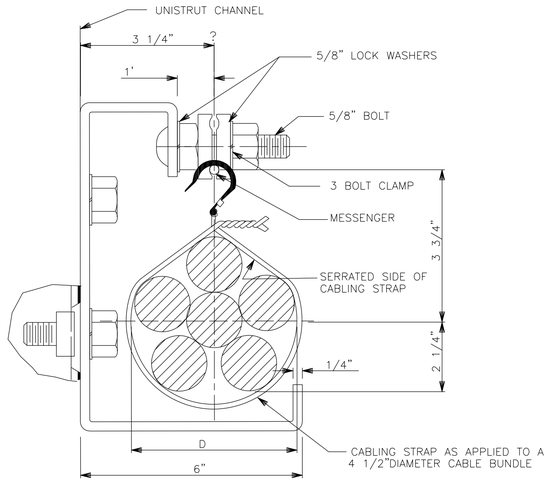

CABLE HANGER

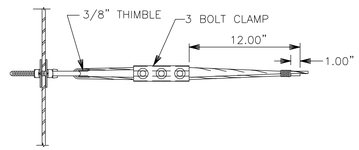

MESSENGER DEAD-END (ANCHOR)

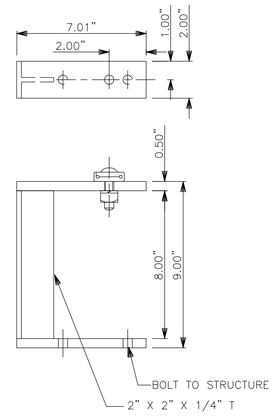

DETAIL "K"

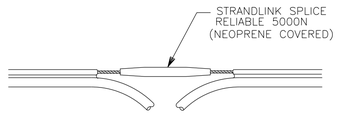

DETAIL "I"

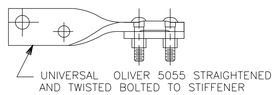

DETAIL "L"

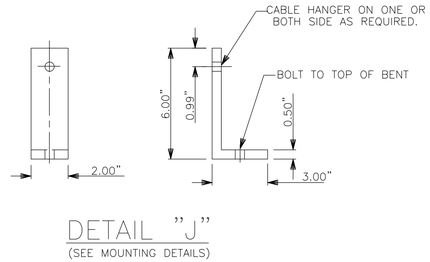

DETAIL "J"
(SEE MOUNTING DETAILS)

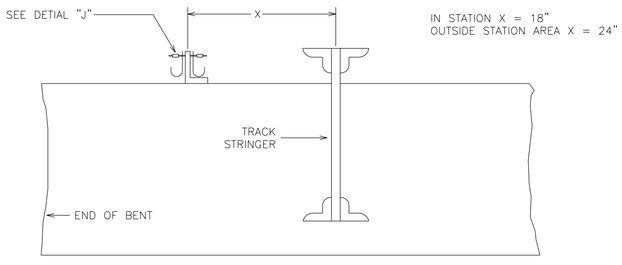

CABLE HANGER DETAIL ALONG STRUCTURE

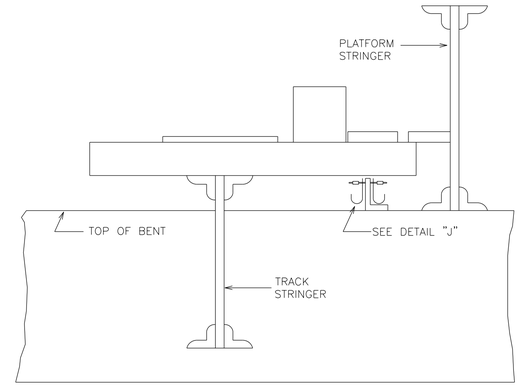

CABLE HANGER DETAIL THROUGH PLATFORM

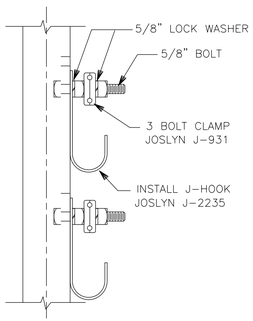

DETAIL "F"

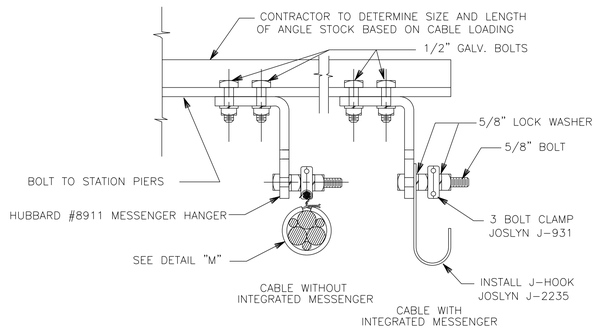

DETAIL "H"

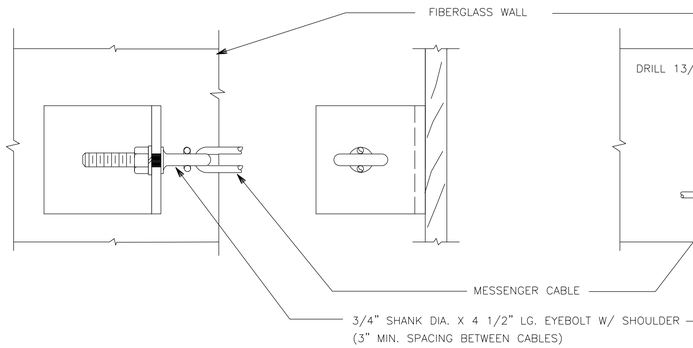

DETAIL OF ATTACHMENT

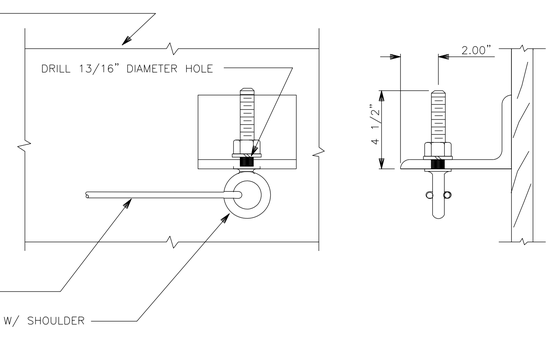

ALTERNATIVE ATTACHMENT

DESIGN BY:		4	7/3/2023	ISSUED FOR BID	MAS	MAS	ECB			
DRAWN BY:		3	4/28/2023	JB PLATFORM RELOCATION	MAS	MAS	ECB			
CHECKED BY:		2	9/2/2022	100% ADDENDUM 1	MAS	MAS	ECB			
APPROVED BY:		1	6/17/2022	100% DESIGN SUBMITTAL	MAS	MAS	JFS			
CDOT/APPROVED BY:		NO.	DATE	REVISIONS	DES.	DRW.	CHK.	DCCO	CDOT	

TRANSYSTEMS
222 SOUTH RIVERSIDE PLAZA SUITE 610
CHICAGO, ILLINOIS 60606

GANNETT FLEMING

CDOT
CHICAGO DEPARTMENT OF TRANSPORTATION
DIVISION OF ENGINEERING

STATE / LAKE LOOP ELEVATED STATION
200 NORTH STATE STREET, CHICAGO, IL 60601

TYPICAL MESSENGER WIRE DETAILS
1 OF 2

CDOT PROJECT D-1-209 | DATE: 4/28/2023

SPEC. NO.

DRAWING NO.
TC-009

REVISION NO. CR

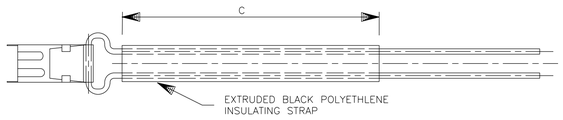

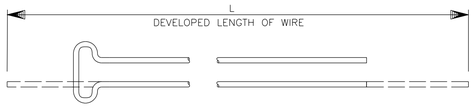

D DIAMETER OF CABLE	C LENGTH OF INSULATING PIECE	L DEVELOPED LENGTH OF WIRE
1"	3 – 1/2"	14 – 1/4"
1 – 1/2"	5"	17 – 1/4"
2"	6 – 1/2"	20 – 1/4"
2 – 1/2"	8"	23 – 1/4"
3 – 1/2"	11 – 1/4"	30"
4 – 1/2"	14 – 1/4"	36"

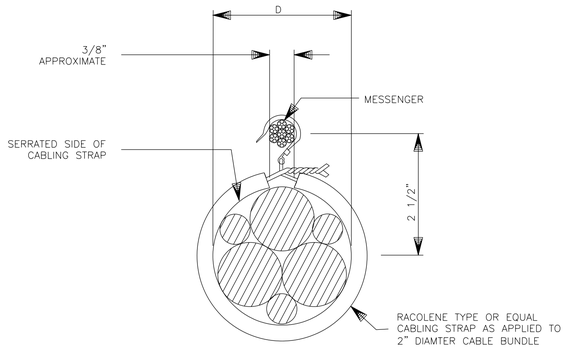

DETAIL "M"

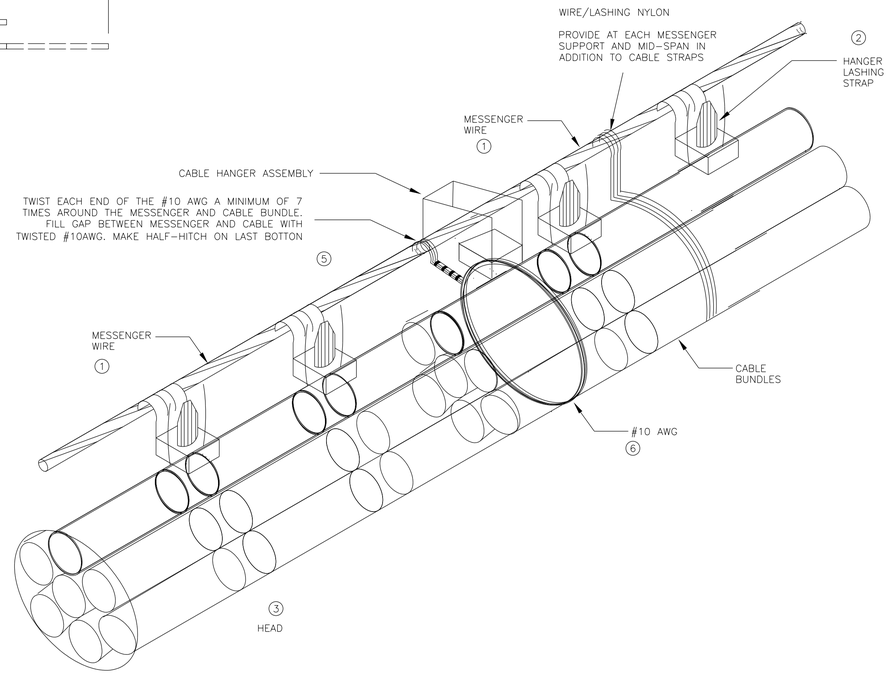

NOTES:

1. PLACE THE HOOK OF THE LASHING STRAP OVER THE MESSENGER WIRE, AND CLOSE THE HOOK WITH PLIERS. HOOK SHOULD BE PINCHED CLOSED TIGHT AND SECURED.
2. LOOP THE LASHING STRAP AROUND THE CABLE, THROUGH THE HEAD, AND PULL UP TO DESIRED TIGHTNESS. DO NOT EXCEED CABLE MAXIMUM RECOMMENDED LOAD.
3. IF NECESSARY, RELEASE THE STRAP BY PULLING BACK RELEASE TAB LOCATION IN THE HEAD.
4. THE MAX CONTINUOUS STATIC LOADING FOR THE HANGER LASHING STRAP IS 20 LBS. PER STRAP. SPACE STRAPS AS NEEDED NOT TO EXCEED 15 INCHES.
5. INSTALL #10 AWG WIRE TIED EVERY MID SPAN OF THE BENT AND BRACKET SUPPORT. CABLE SHOULD BE WOUND 7 TIMES MINUMUM.
6. DO NOT EXCEED CABLE MINIMUM BEND RADIUS.
7. DO NOT STRESS CABLE OR TIGHTLY CINCHED CABLE BUNDLES.
8. BUNDLES SHOULD BE SPACED 3–5 INCHES APART
9. TO ENSURE PROPER TENSIONING, STRAIGHT RUNS OF CABLE (NO TURNS, DIPS, TWISTS OR RISES) INSTALL A TENSION ADJUSTMENT FITTING AT LEAST EVERY 50 FEET
10. RUNS WITH BENDS OR CORNERS SHOULD HAVE A TENSION ADJUSTMENT FITTING AT LEAST EVERY 10 FEET
11. ALL CABLE SHALL BE RUN NEATLY, PARALLEL, WITHIN INDUSTRY STANDARDS AND NO SPIRALING.
12. MAXIMUM BUNDLE SIZE SHALL NOT EXCEED 6 INCHES.

TYPICAL NYLON CABLE TIE

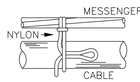

STEP 1

HITCH NYLON AROUND MESSENGER, LOOP SHORT END AND LAY AGAINST CABLE

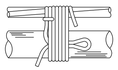

STEP 2

TAKE 6 TURNS AROUND CABLE AND MESSENGER

SEE NOTE 1

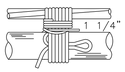

STEP 3

BUTTON TO FILL GAP BETWEEN MESSENGER AND CABLE. MAKE HALF–HITCH ON LAST BUTTON

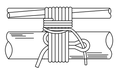

STEP 4

FEED END FROM HALF–HITCH THRU LOOP

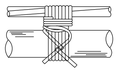

STEP 5

DRAW LOOP IN UNDER TIE DIAGONALLY ACROSS CABLE SO THAT SAME BITES TIGHT AND LOCKS IN CENTER OR TIE. TRIM END OF NYLON CLOSE TO SERVE

FOR CABLE DIAMETERS UP TO AND INCLUDING 1"

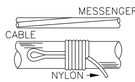

STEP 1

LOOP SHORT END OF NYLON AGAINST CABLE OF NYLON SERVE WITH "A" TURNS

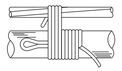

STEP 2

SERVE "B" TURNS AROUND CABLE AND MESSENGER

SEE NOTE 1

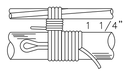

STEP 3

BUTTON TO FILL GAP AND CABLE. MAKE BETWEEN MESSENGER BUTTON HALF–HITCH ON LAST

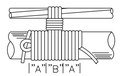

STEP 4

SERVE "A" TURNS AROUND CABLE ONLY. DRAW END OF NYLON THRU LOOP

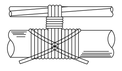

STEP 5

TIE DIAGONALLY DRAW LOOP IN UNDER ACROSS CABLE SO THAT SAME BITES TIGHT AND LOCKS IN CENTER OR TIE. TRIM TO SERVE END OF NYLON CLOSE

FOR CABLE DIAMETERS OVER 1"

NUMBER OF NYLON TURNS FOR VARIOUS CABLE SIZES		
DIAM OF CABLE	"A" TURNS	"B" TURNS
1" TO 3"	6	6
3" TO 4"	8	6
4" TO 5"	10	6
5" TO 6"	12	6

NOTE 1

MAKE LONGER AND PROVIDE ADDITIONAL HITCHES FOR NYLON X–TIES FOR HOLDING CABLES AT ENTRANCES TO EQUIPMENT

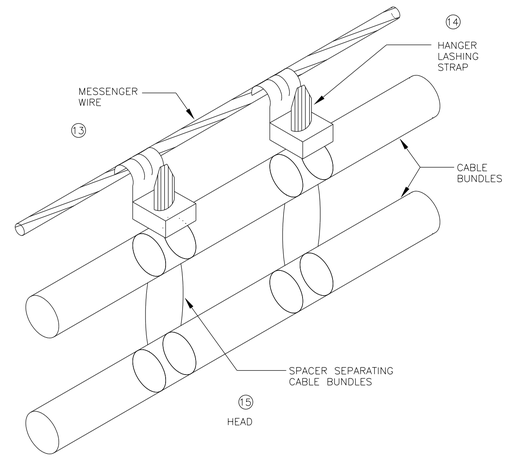

13. PLACE THE HOOK OF THE LASHING STRAP OVER THE MESSENGER WIRE, AND CLOSE THE HOOK WITH A PLIERS.
14. LOOP THE LASHING STRAP AROUND THE CABLE, THROUGH THE HEAD, AND PULL UP TO DESIRED TIGHTNESS.
15. IF NECESSARY, RELEASE THE STRAP BY PULLING BACK ON RELEASE TAB LOCATION IN THE HEAD.

FOR BEST RESULTS SUGGESTED SPACING OF HANGER LASHING STRAP IS 15 INCHES.

THE RECOMMENDED MAX CONTINUOUS STATIC LOADING FOR THE HANGER LASHING STRAP IS 25 LBS. PER STRAP.

		NO.	DATE	REVISIONS	DES.	DRW.	CHK.	DCCO	CDOT
DESIGN BY:		4	7/3/2023	ISSUED FOR BID	MAS	MAS	ECB		
DRAWN BY:		3	4/28/2023	JB PLATFORM RELOCATION	MAS	MAS	ECB		
CHECKED BY:		2	9/2/2022	100% ADDENDUM 1	MAS	MAS	ECB		
APPROVED BY:		1	6/17/2022	100% DESIGN SUBMITTAL	MAS	MAS	JFS		
CDOT/APPROVED BY:									

TRANSYSTEMS
222 SOUTH RIVERSIDE PLAZA SUITE 610
CHICAGO, ILLINOIS 60606

GANNETT FLEMING

CHICAGO DEPARTMENT OF TRANSPORTATION
DIVISION OF ENGINEERING

STATE / LAKE LOOP ELEVATED STATION
200 NORTH STATE STREET, CHICAGO, IL 60601

TYPICAL MESSENGER WIRE DETAILS
2 OF 2

CDOT PROJECT D-1-209

DATE: 4/28/2023

SPEC. NO.

DRAWING NO.
TC-010

REVISION NO. CR

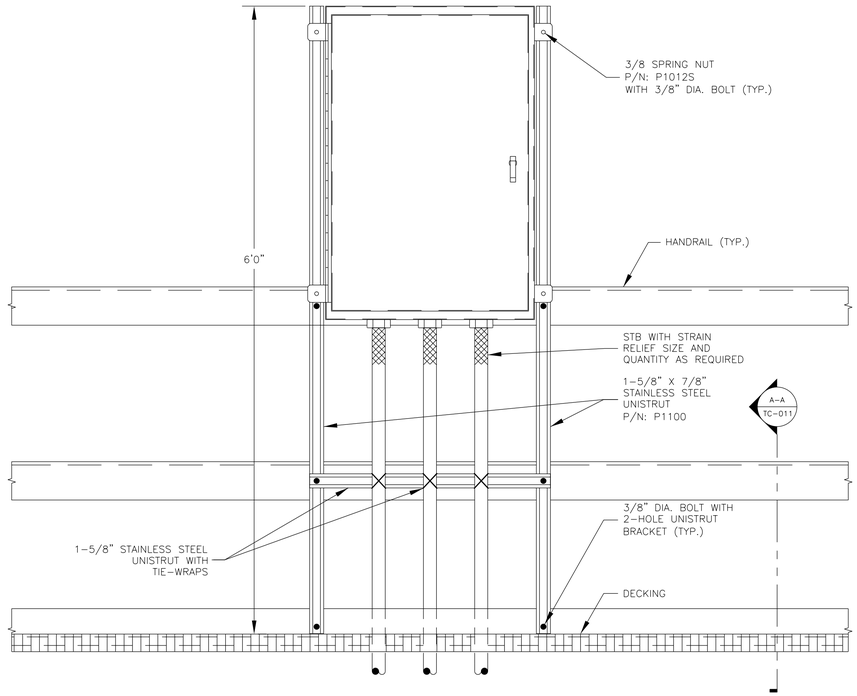

1 / TC-011 MOUNTING DETAIL
SCALE: NTS

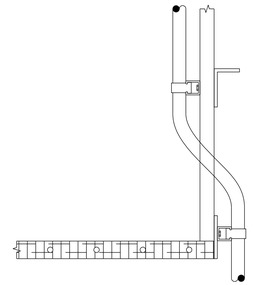

A-A / TC-011 PARTIAL SIDE VIEW
SCALE: NTS

NOTES:

1. ALL MATERIAL 12-GAUGE STAINLESS STEEL (TYPE 316L) OR BETTER UNLESS OTHERWISE NOTED.
2. ALL SEAMS WELDED.
3. JUNCTION BOX TO MEET REQUIREMENTS OF 34 42 62 – JUNCTION BOXES, AND 34 42 38 – MISCELLANEOUS COMPONENTS AND PRODUCTS.

DESIGN BY:										TranSystems TRANSYSTEMS 222 SOUTH RIVERSIDE PLAZA SUITE 610 CHICAGO, ILLINOIS 60606	GANNETT FLEMING
DRAWN BY:											
CHECKED BY:		2	7/3/2023	ISSUED FOR BID	MAS	MAS	ECB				
APPROVED BY:		1	4/28/2023	JB PLATFORM RELOCATION	MAS	MAS	ECB				
CDOT/APPROVED BY:		NO.	DATE	REVISIONS	DES.	DRW.	CHK.	DCCO	CDOT		

CDOT
CHICAGO DEPARTMENT OF TRANSPORTATION
DIVISION OF ENGINEERING

STATE / LAKE LOOP ELEVATED STATION
200 NORTH STATE STREET, CHICAGO, IL 60601

TYPICAL EXPRESS JUNCTION BOX DETAILS
1 OF 2

CDOT PROJECT D-1-209 | DATE: 4/28/2023

SPEC. NO.

DRAWING NO.
TC-011

REVISION NO. CR

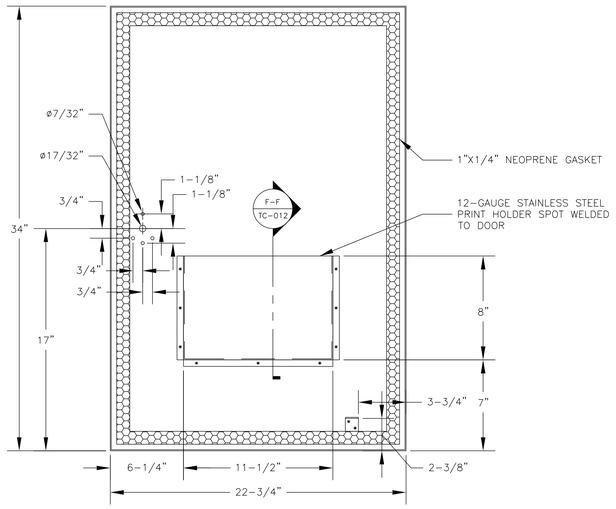

E
TC-012

DOOR DETAIL

SCALE: NTS

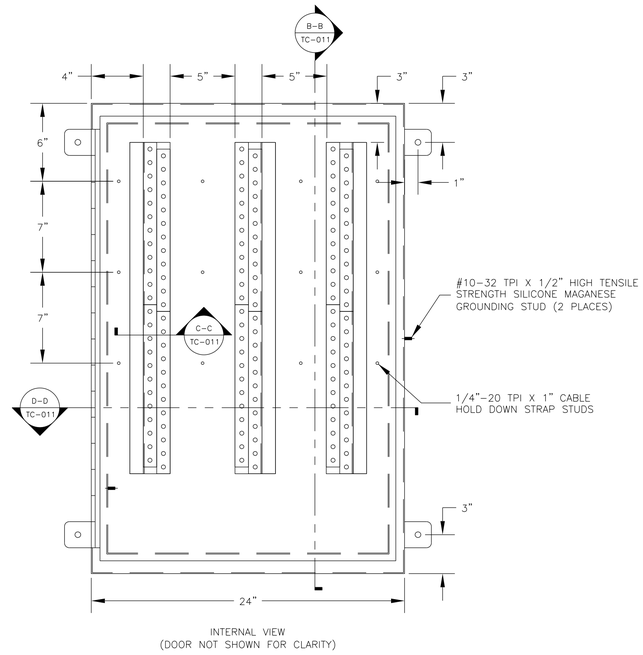

INTERNAL VIEW
(DOOR NOT SHOWN FOR CLARITY)

2
TC-011

24"X36"X8" EXPRESS CABLE JUNCTION BOX

SCALE: NTS

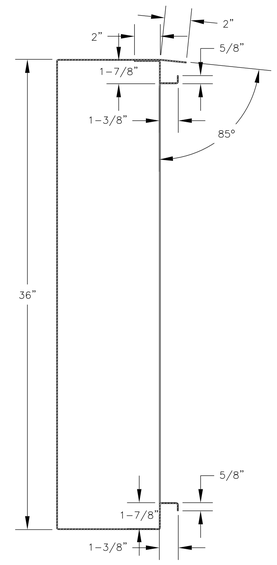

B-B
TC-011

24"X36"X8" EXPRESS CABLE JUNCTION BOX

SCALE: NTS

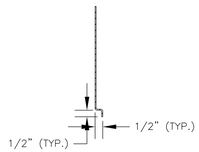

F-F
TC-012

PRINT HOLDER DETAIL

SCALE: NTS

NOTES:

1. ALL MATERIAL 12-GAUGE STAINLESS STEEL (TYPE 316L) OR BETTER UNLESS OTHERWISE NOTED.
2. ALL SEAMS WELDED.
3. JUNCTION BOX TO MEET REQUIREMENTS OF 34 42 62 – JUNCTION BOXES, AND 34 42 38 – MISCELLANEOUS COMPONENTS AND PRODUCTS.

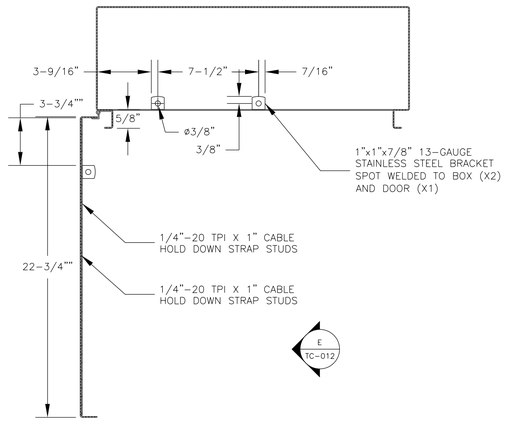

D-D
TC-011

24"X36"X8" EXPRESS CABLE JUNCTION BOX

SCALE: NTS

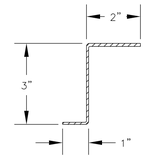

C-C
TC-011

Z-BRACKET

SCALE: NTS

DESIGN BY:										
DRAWN BY:										
CHECKED BY:		2	7/3/2023	ISSUED FOR BID	MAS	MAS	ECB		
APPROVED BY:		1	4/28/2023	JB PLATFORM RELOCATION	MAS	MAS	ECB		
CDOT/APPROVED BY:		NO.	DATE	REVISIONS	DES.	DRW.	CHK.	DCCO	CDOT

TRANSYSTEMS
222 SOUTH RIVERSIDE PLAZA SUITE 610
CHICAGO, ILLINOIS 60606

GANNETT FLEMING

CHICAGO DEPARTMENT OF TRANSPORTATION
DIVISION OF ENGINEERING

STATE / LAKE LOOP ELEVATED STATION
200 NORTH STATE STREET, CHICAGO, IL 60601

TYPICAL EXPRESS JUNCTION BOX DETAILS
2 OF 2

CDOT PROJECT D-1-209

DATE: 4/28/2023

SPEC. NO.

DRAWING NO.
TC-012

REVISION NO. CR

NORMAL TRAFFIC

NORTH

LP2-142T

LP2-139T

646

R34-2J1
LP2-142T

R34-T2
LP2EWB28T
1 #18 BK

R34-T2
LP2EWN28T
7 #18 W

R34-T2
LP2EWN28T
6 #18 W

R34-T4
LP2EWB28R
1 #18 BR

R34-T4
LP2EWN28R
5 #18 W

R34-T4
LP2EWN28R
5 #18 W

DC POWER IN

TRAIN DETECTION CODE IN

TRAIN DETECTION CODE OUT

R34-T7
121 421 #20 BK/BR

R34-T7
120 420 #20 G

LP2-142TD

R34-T4
LP2EW75 CODE
11 #20 W/G

R34-T4
SPARE
15 #20 W/Y

75 CODE INPUT

TRAIN DETECTION CODE REFERENCE INPUT

R34-T7
122 422 #20 W/O

TRANSMIT OUT

RECEIVE IN

SPEED SELECTION

RELAY OUT

659

15 R W #20 R34-T7 401 101 LP2-142TB

16 W W #20 R34-T7 402 102 LP2-142TN

31 BK W #20 R34-T7 403 103 LP2-142RB

32 W W #20 R34-T7 404 104 LP2-142RN

LP2-139RB

LP2-139RN

CONTINUED ON SHEET 18T0139

CONTINUED ON SHEET 18T0137

R10-T4 R10-T3
15 15

R10-T4 R10-T3
16 16

LP2-142T-LP2-139RB #14

LP2-142T-LP2-139RN #14

JB151A C15 C16

JB146 C15 C16

JB142A C41 C42

JB137A C45 C46

23 S #20 R34-T7 405 105

13 R #20 R34-T7 406 106

22 V #20 R34-T7 407 107

17 O #20 R34-T7 408 108

27 W/R #20 R34-T7 409 109 R45-P8 22 LP2-142T-35

21 BU#20 R34-T7 410 110

26 W/BR #20 R34-T7 411 111 R45-P8 32 LP2-142T-25

25 W/BK #20 R34-T7 412 112

18 Y #20 R34-T7 413 113 LP2-142T-15

24 W #20 R34-T7 414 114

10 BK #20 R34-T7 415 115

11 BR #20 R34-T7 416 116

33 W/BU #20 R34-T7 417 117 R49-P5 35 LP2-142T-GO

34 W/V #20 R34-T7 418 118

35 W/S #20 R34-T7 419 119 NLP2-142T

R48-6D LP2-151 T2PR 10A 12A 11A LP2-142T-35R

R48-5A LP2-149 T2PR 10A 12A 11A LP2-142T-35R1

R48-4D LP2-146 T2PR 10C 12C 11C LP2-142T-35R2

R45-P8 44

R34-T7 156 456

R34-1C LP2-137 TR 10A 12A 11A LP2-142T-35R3

R34-T7 457 157

R49-P5 26

R49-3E LP2-E RFAPR 7F 9F 8F LP2-142T-35R4

R45-P8 15

R34-T7 155 455

R46-P6 14

R50-P4 14

R49-2B LP2-E NFAPR 10A 12A 11A LP2E WB28T #14

R49-2D LP2-E NFA2PR 11C 10C 12C

R50-P4 LP2-142T-GON 33

R46-P6 33

R48-1D LP2-137 HSR 8E 7E

R48-2A LP2-137 NVPR 8B 7B

LP2-142T-GON1

R48-2D LP2-137 TPR 10A 12A 11A LP2EWB28T #14

LP2-142T-GON2

R48-3A LP2-139 TPR 7D 9D 8D LP2EWB28T #14

LP2-142T-GON3

R34-1A 1C 1A LP2-142 TR LP2EWN28R #14

533

R49-4A LP2-E RFA2PR 11C 10C 12C

R50-P4 43

R46-P6 43

R48-4A LP2-144 T2PR 8F 7F

LP2-142T-GOR

LP2-142T-GOR1

LP2-142T-GOR2

R48-3C LP2-142 TPR 7D 9D 8D LP2EWB28T #14

152 R34-R9 LP2-142TP RES T B 30 OHM

TB #6

LP2-142TP1 7B 8B

R34-T7 458 158

R45-P8 34

LP2-142TP

R48-3C 1B 1A 1F 2A 2F LP2-142 TPR TC #14 TC #14

536

759 R34-2 AF-800C CARDFILE FRONT VIEW

A B

CODE RATE GENERATOR 628

POWER AMPLIFIER 744

OSCILLATOR 748

RECEIVER INPUT 752

SYNCHRONOUS RECTIFIER 642

621

TRACK CIRCUIT LP2-142T
DETECTION FREQUENCY 2820HZ
DETECTION CODE RATE 11.7

TRACK CODE SELECTOR

JP4: 8.1HZ, 5.5HZ, 9.4HZ, 11.7HZ

JP3 .047, JP2 .033, JP1 .015 — IN / OUT

TRACK CODE FREQUENCY AND CABLE COMPENSATION JUMPERS

O O = IN

X X = OUT

NOTES
ALL WIRES #16 UNLESS NOTED

18 RELAY ROOM

DESIGN BY:									
DRAWN BY:									
CHECKED BY:		2	7/3/2023	ISSUED FOR BID	MAS	MAS	ECB		
APPROVED BY:		1	4/28/2023	JB PLATFORM RELOCATION	MAS	MAS	ECB		
CDOT/APPROVED BY:		NO.	DATE	REVISIONS	DES.	DRW.	CHK.	DCCO	CDOT

TranSystems
TRANSYSTEMS
222 SOUTH RIVERSIDE PLAZA SUITE 610
CHICAGO, ILLINOIS 60606

GANNETT FLEMING

CDOT
CHICAGO DEPARTMENT OF TRANSPORTATION
DIVISION OF ENGINEERING

STATE / LAKE LOOP ELEVATED STATION
200 NORTH STATE STREET, CHICAGO, IL 60601

TOWER 18 - CAB APPLICATION CIRCUITS
LP2-142T

CDOT PROJECT D-1-209 | DATE: 4/28/2023

SPEC. NO.

DRAWING NO. TC-013

REVISION NO. CR

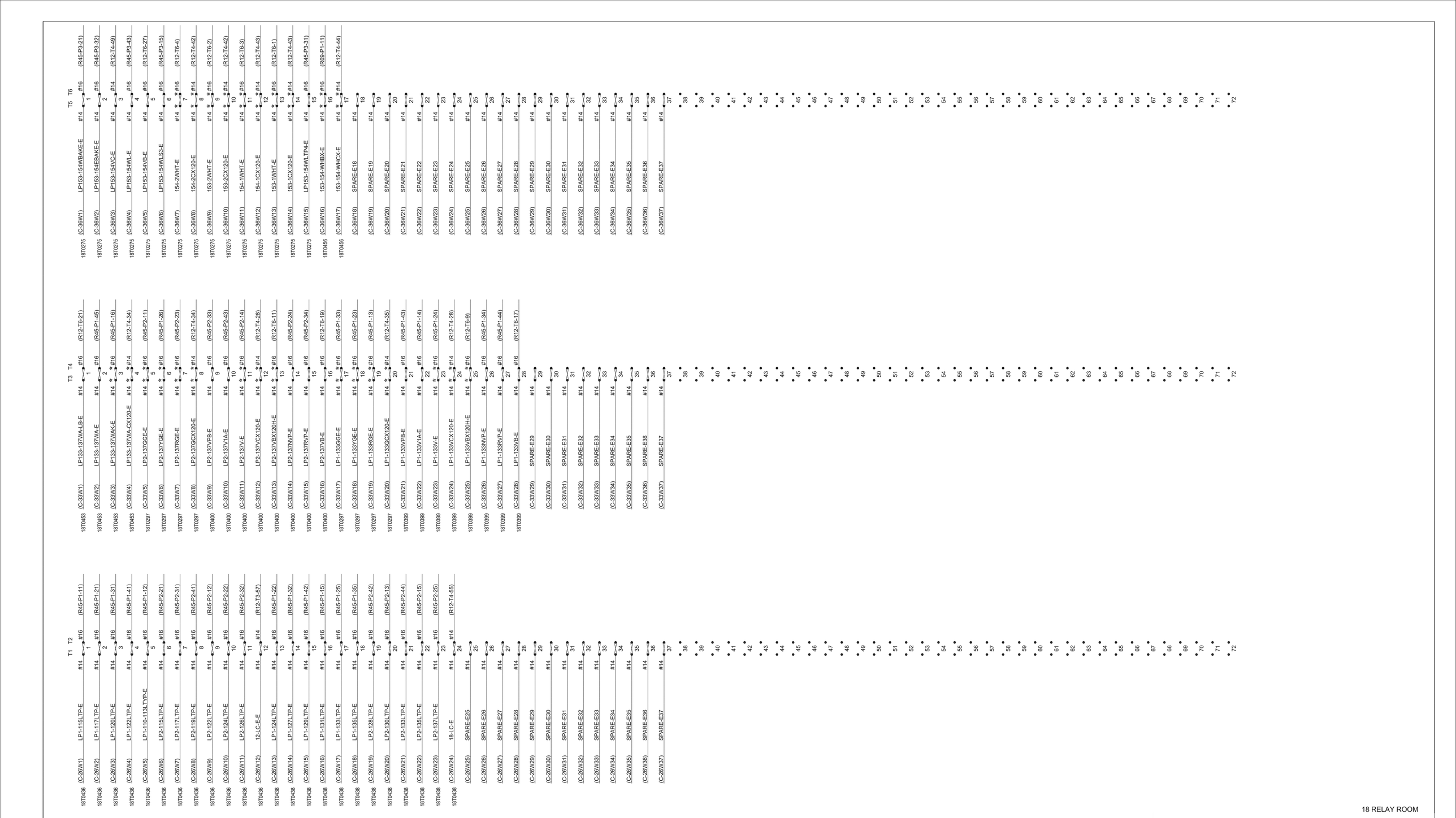

18 RELAY ROOM

NOTE: * = INSULATED NUT AND SLEEVE

DESIGN BY:									
DRAWN BY:									
CHECKED BY:		2	7/3/2023	ISSUED FOR BID	MAS	MAS	ECB		
APPROVED BY:		1	4/28/2023	JB PLATFORM RELOCATION	MAS	MAS	ECB		
CDOT/APPROVED BY:		NO.	DATE	REVISIONS	DES.	DRW.	CHK.	DCCO	CDOT

TRANSYSTEMS
222 SOUTH RIVERSIDE PLAZA SUITE 610
CHICAGO, ILLINOIS 60606

GANNETT FLEMING

CHICAGO DEPARTMENT OF TRANSPORTATION
DIVISION OF ENGINEERING

STATE / LAKE LOOP ELEVATED STATION
200 NORTH STATE STREET, CHICAGO, IL 60601

SPEC. NO.

TOWER 18 - RACK 9
CABLE LAYOUT T1-T6

DRAWING NO.
TC-014

CDOT PROJECT D-1-209 | DATE: 4/28/2023 | REVISION NO. CR

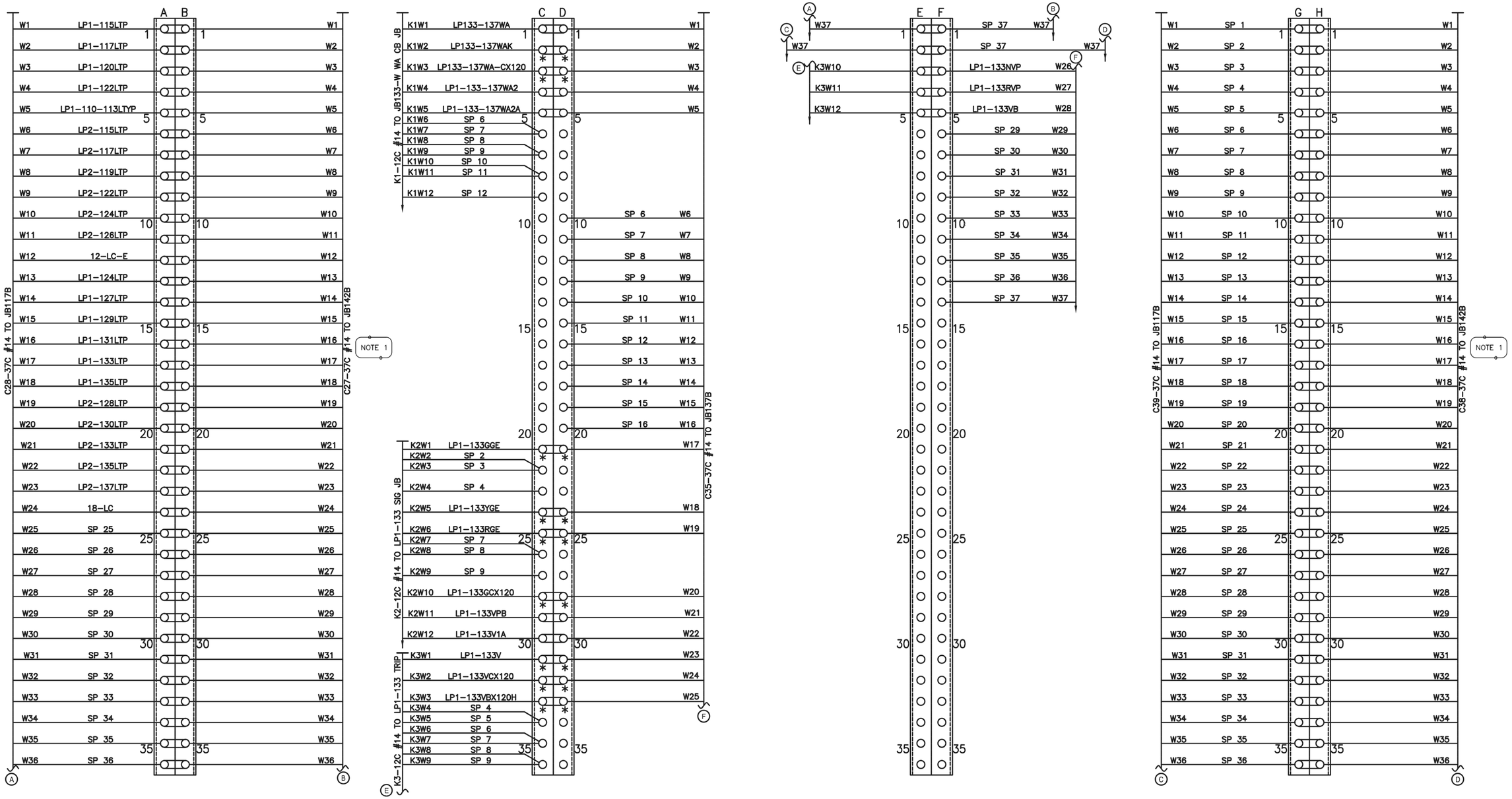

(X) = INDICATES CONTINUATION OF CABLE OF SAME PAGE

NOTES: * = INSULATED NUTS AND SLEEVES

—O—O— = IN

NOTES:

1. REPLACE CABLES C27 AND C38 LIKE-FOR-LIKE, AS SHOWN ON TC-001 AND TC-002.

DESIGN BY:										
DRAWN BY:										
CHECKED BY:		2	7/3/2023	ISSUED FOR BID	MAS	MAS	ECB			
APPROVED BY:		1	4/28/2023	JB PLATFORM RELOCATION	MAS	MAS	ECB			
CDOT/APPROVED BY:		NO.	DATE	REVISIONS	DES.	DRW.	CHK.	DCCO	CDOT	

TRANSYSTEMS
222 SOUTH RIVERSIDE PLAZA SUITE 610
CHICAGO, ILLINOIS 60606

GANNETT FLEMING

CHICAGO DEPARTMENT OF TRANSPORTATION
DIVISION OF ENGINEERING

STATE / LAKE LOOP ELEVATED STATION
200 NORTH STATE STREET, CHICAGO, IL 60601

SPEC. NO.

JUNCTION BOX LAYOUT DETAIL
JB 133B - LOOP STATION MARKER 133+16

DRAWING NO.
TC-015

CDOT PROJECT D-1-209

DATE: 4/28/2023

REVISION NO. CR

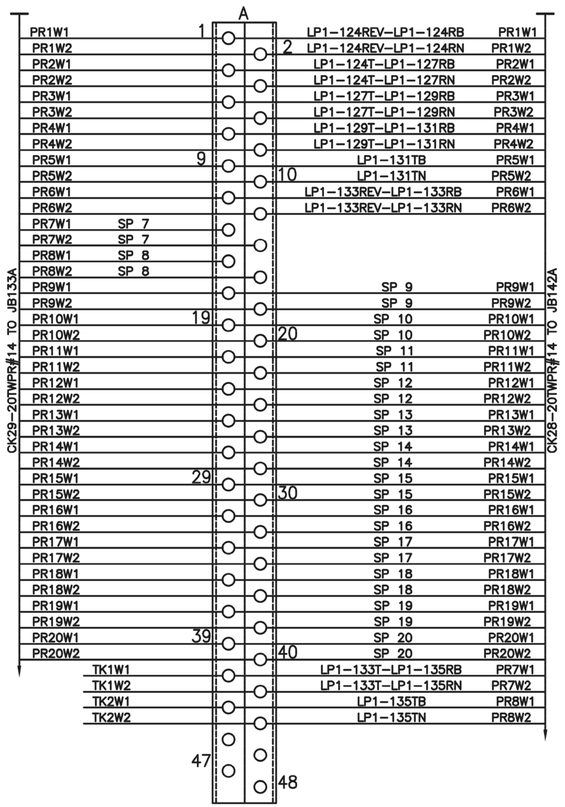

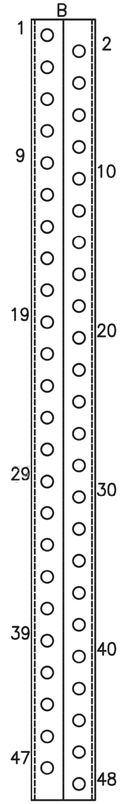

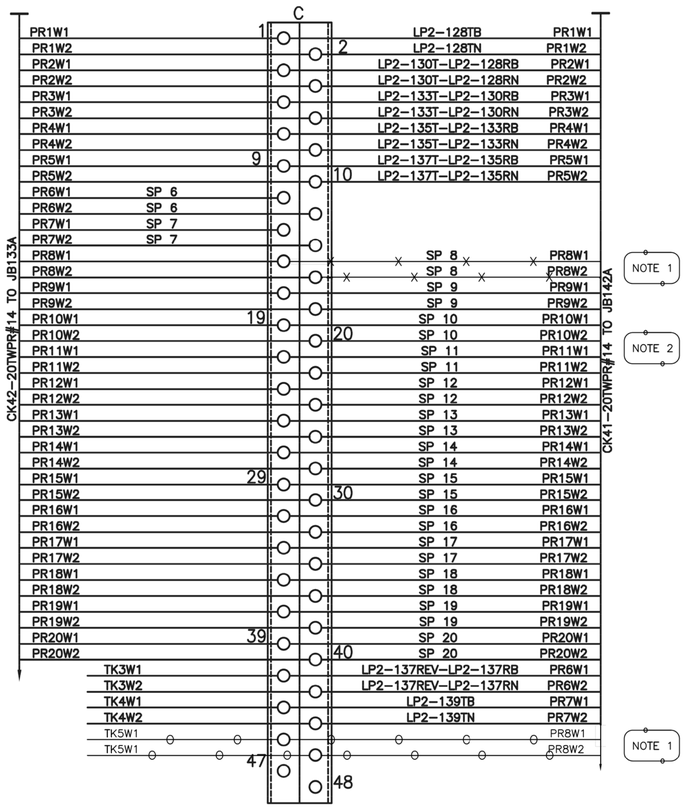

NOTES: * = INSULATED NUTS AND SLEEVES

Ⓧ = INDICATES CONTINUATION OF CABLE OF SAME PAGE

—O—O— = IN

—X—X— = OUT

NOTES:

1. RELOCATE TWISTED PAIR 8 FROM C15 AND C16 TO C45 AND C46, RESPECTIVELY.
2. REPLACE CABLE CK41 LIKE–FOR–LIKE, AS SHOWN ON TC–001 AND TC–002 WITH THE EXCEPTION OF THE CONDUCTOR RELOCATION OUTLINED IN NOTE 1.

DESIGN BY:									
DRAWN BY:									
CHECKED BY:		2	7/3/2023	ISSUED FOR BID	MAS	MAS	ECB		
APPROVED BY:		1	4/28/2023	JB PLATFORM RELOCATION	MAS	MAS	ECB		
CDOT/APPROVED BY:		NO.	DATE	REVISIONS	DES.	DRW.	CHK.	DCCO	CDOT

TRANSYSTEMS
222 SOUTH RIVERSIDE PLAZA SUITE 610
CHICAGO, ILLINOIS 60606

GANNETT FLEMING

CDOT
CHICAGO DEPARTMENT OF TRANSPORTATION
DIVISION OF ENGINEERING

STATE / LAKE LOOP ELEVATED STATION
200 NORTH STATE STREET, CHICAGO, IL 60601

JUNCTION BOX LAYOUT DETAIL
JB 137A - LOOP STATION MARKER 136+84

CDOT PROJECT D-1-209 | DATE: 4/28/2023

SPEC. NO.

DRAWING NO.
TC-016

REVISION NO. CR

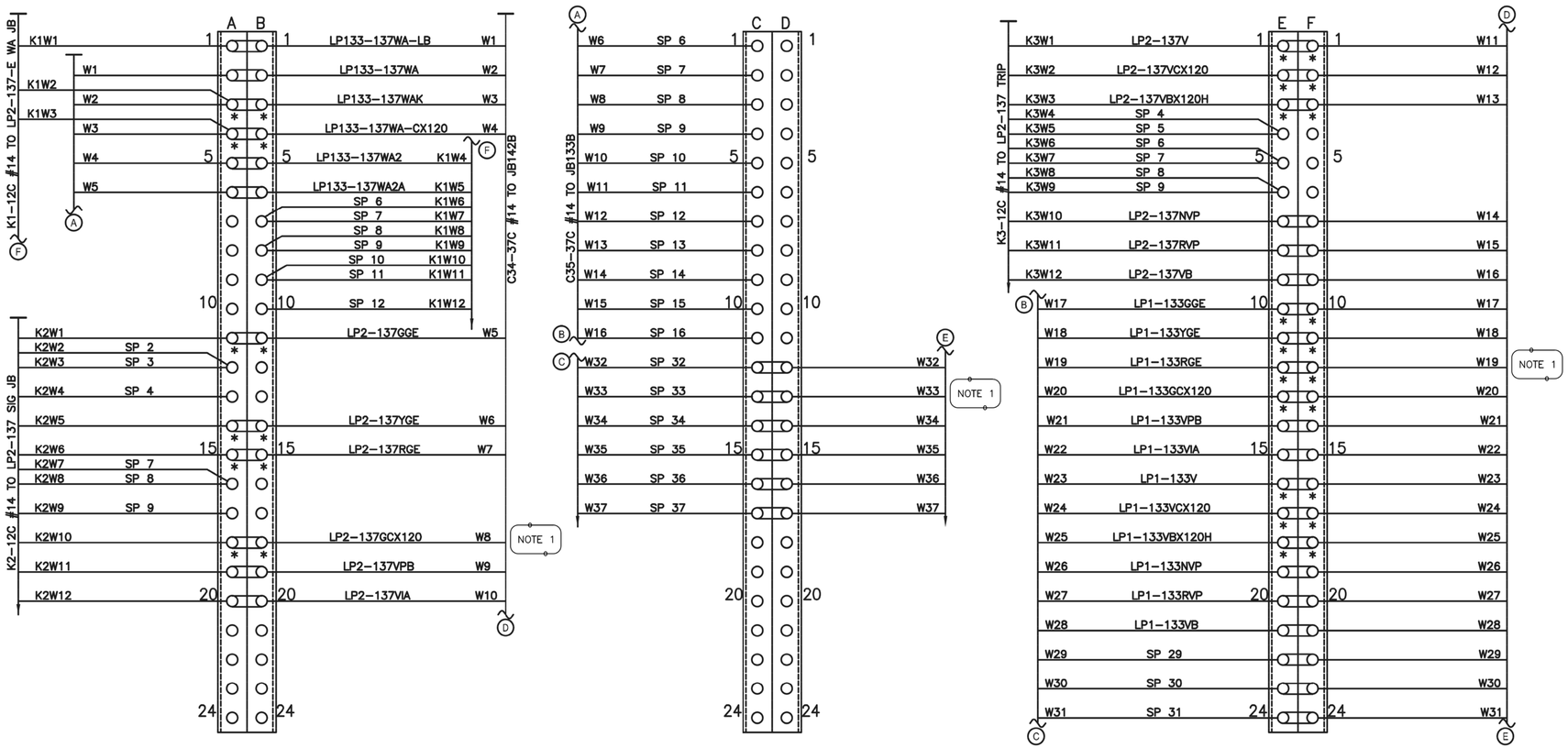

X = INDICATES CONTINUATION OF CABLE OF SAME PAGE

NOTES: * = INSULATED NUTS AND SLEEVES

—O—O— = IN

NOTES:

1. REPLACE CABLE C34 LIKE-FOR-LIKE, AS SHOWN ON TC-001 AND TC-002.

DESIGN BY:										
DRAWN BY:										
CHECKED BY:		2	7/3/2023	ISSUED FOR BID	MAS	MAS	ECB			
APPROVED BY:		1	4/28/2023	JB PLATFORM RELOCATION	MAS	MAS	ECB			
CDOT/APPROVED BY:		NO.	DATE	REVISIONS	DES.	DRW.	CHK.	DCCO	CDOT	

TRANSYSTEMS
222 SOUTH RIVERSIDE PLAZA SUITE 610
CHICAGO, ILLINOIS 60606

GANNETT FLEMING

CHICAGO DEPARTMENT OF TRANSPORTATION
DIVISION OF ENGINEERING

STATE / LAKE LOOP ELEVATED STATION
200 NORTH STATE STREET, CHICAGO, IL 60601

SPEC. NO.

JUNCTION BOX LAYOUT DETAIL
JB 137B - LOOP STATION MARKER 136+84

DRAWING NO.
TC-017

CDOT PROJECT D-1-209

DATE: 4/28/2023

REVISION NO. CR

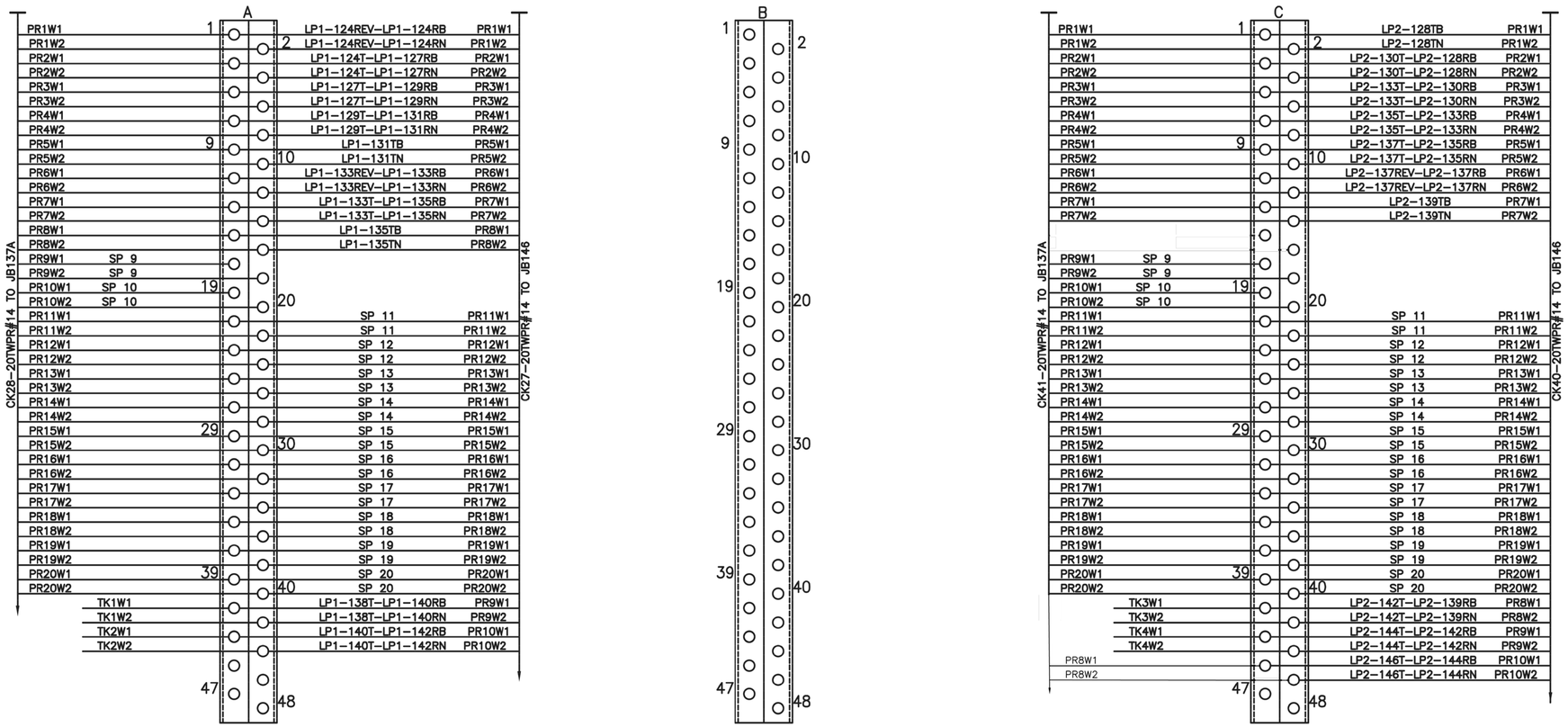

NOTES: * = INSULATED NUTS AND SLEEVES

(X) = INDICATES CONTINUATION OF CABLE OF SAME PAGE

—O—O— = IN

DESIGN BY:										
DRAWN BY:										
CHECKED BY:		2	7/3/2023	ISSUED FOR BID	MAS	MAS	ECB			
APPROVED BY:		1	4/28/2023	JB PLATFORM RELOCATION	MAS	MAS	ECB			
CDOT/APPROVED BY:		NO.	DATE	REVISIONS	DES.	DRW.	CHK.	DCCO	CDOT	

TRANSYSTEMS
222 SOUTH RIVERSIDE PLAZA SUITE 610
CHICAGO, ILLINOIS 60606

GANNETT FLEMING

CHICAGO DEPARTMENT OF TRANSPORTATION
DIVISION OF ENGINEERING

STATE / LAKE LOOP ELEVATED STATION
200 NORTH STATE STREET, CHICAGO, IL 60601

JUNCTION BOX LAYOUT DETAIL
JB 142A - LOOP STATION MARKER 142+63

CDOT PROJECT D-1-209

DATE: 4/28/2023

SPEC. NO.

DRAWING NO.
TC-018

REVISION NO. CR

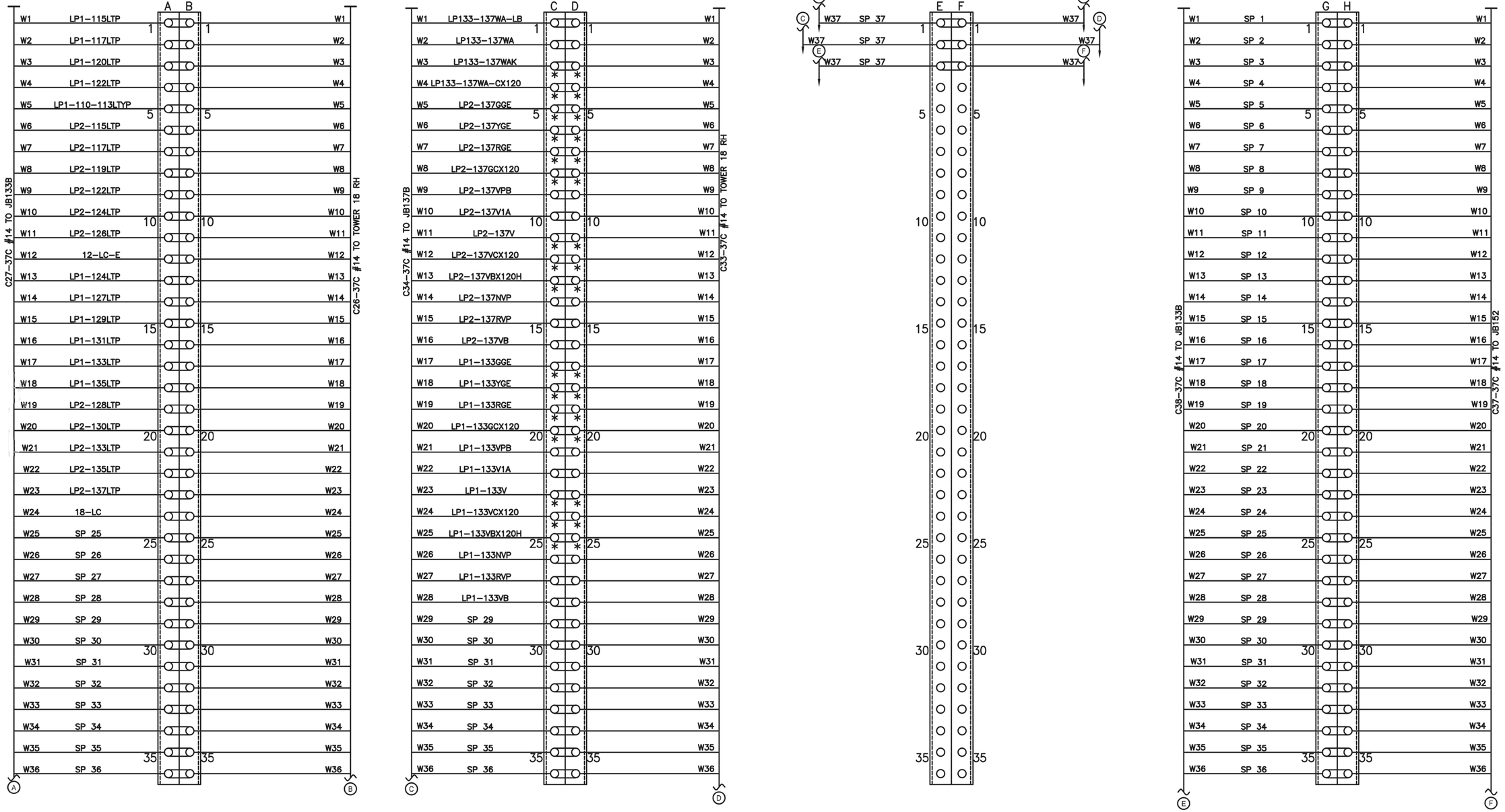

NOTES: * = INSULATED NUTS AND SLEEVES

(X) = INDICATES CONTINUATION OF CABLE OF SAME PAGE

DESIGN BY:									
DRAWN BY:									
CHECKED BY:		2	7/3/2023	ISSUED FOR BID	MAS	MAS	ECB		
APPROVED BY:		1	4/28/2023	JB PLATFORM RELOCATION	MAS	MAS	ECB		
CDOT/APPROVED BY:		NO.	DATE	REVISIONS	DES.	DRW.	CHK.	DCCO	CDOT

TRANSYSTEMS
222 SOUTH RIVERSIDE PLAZA SUITE 610
CHICAGO, ILLINOIS 60606

GANNETT FLEMING

CHICAGO DEPARTMENT OF TRANSPORTATION
DIVISION OF ENGINEERING

STATE / LAKE LOOP ELEVATED STATION
200 NORTH STATE STREET, CHICAGO, IL 60601

SPEC. NO.

JUNCTION BOX LAYOUT DETAIL
JB 142B - LOOP STATION MARKER 142+63

DRAWING NO.
TC-019

CDOT PROJECT D-1-209

DATE: 4/28/2023

REVISION NO. CR

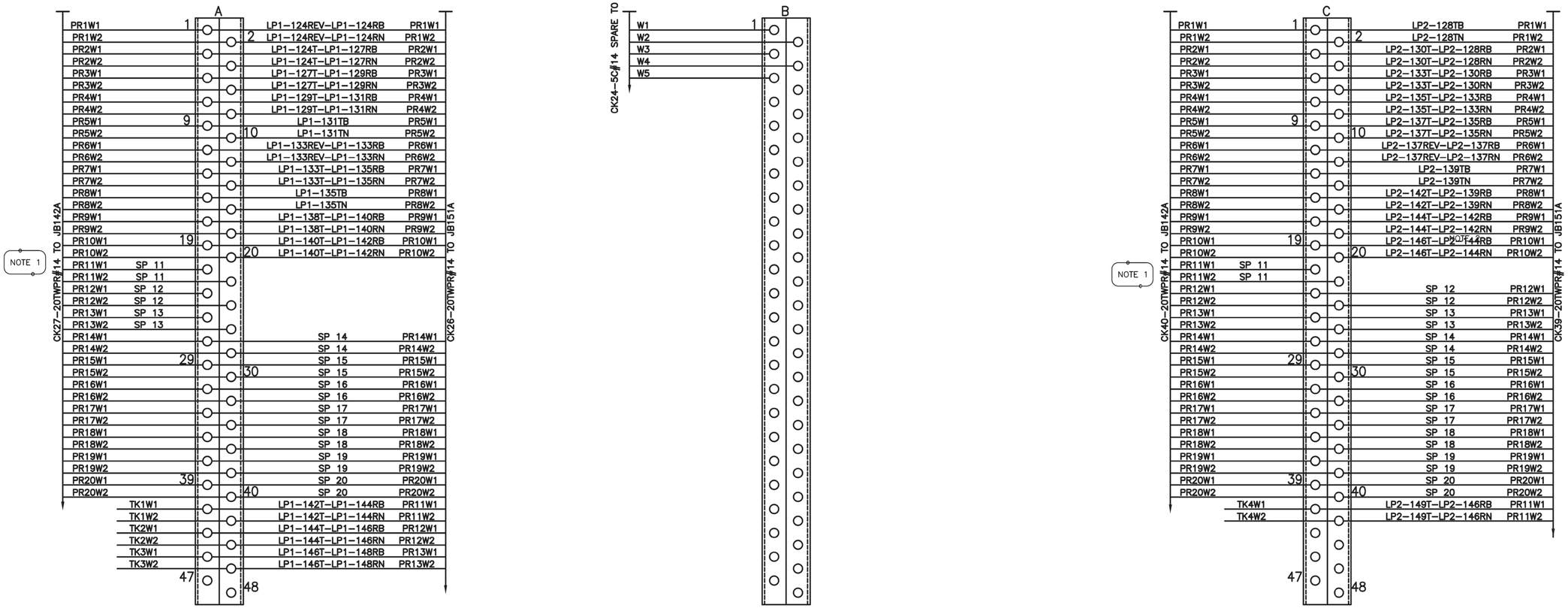

NOTES: * = INSULATED NUTS AND SLEEVES

Ⓧ = INDICATES CONTINUATION OF CABLE OF SAME PAGE

—O—O— = IN

NOTES:

1. REPLACE CABLES CK27 AND CK40 LIKE–FOR–LIKE, AS SHOWN ON TC–001 AND TC–002.

NO.	DATE	REVISIONS	DES.	DRW.	CHK.	DCCO	CDOT
DESIGN BY:							
DRAWN BY:							
CHECKED BY:	2	7/3/2023	ISSUED FOR BID	MAS	MAS	ECB	
APPROVED BY:	1	4/28/2023	JB PLATFORM RELOCATION	MAS	MAS	ECB	
CDOT/APPROVED BY:							

TRANSYSTEMS
222 SOUTH RIVERSIDE PLAZA SUITE 610
CHICAGO, ILLINOIS 60606

GANNETT FLEMING

CDOT
CHICAGO DEPARTMENT OF TRANSPORTATION
DIVISION OF ENGINEERING

STATE / LAKE LOOP ELEVATED STATION
200 NORTH STATE STREET, CHICAGO, IL 60601

JUNCTION BOX LAYOUT DETAIL
JB 146 - LOOP STATION MARKER 145+97

CDOT PROJECT D-1-209

DATE: 4/28/2023

SPEC. NO.

DRAWING NO.
TC-020

REVISION NO. CR

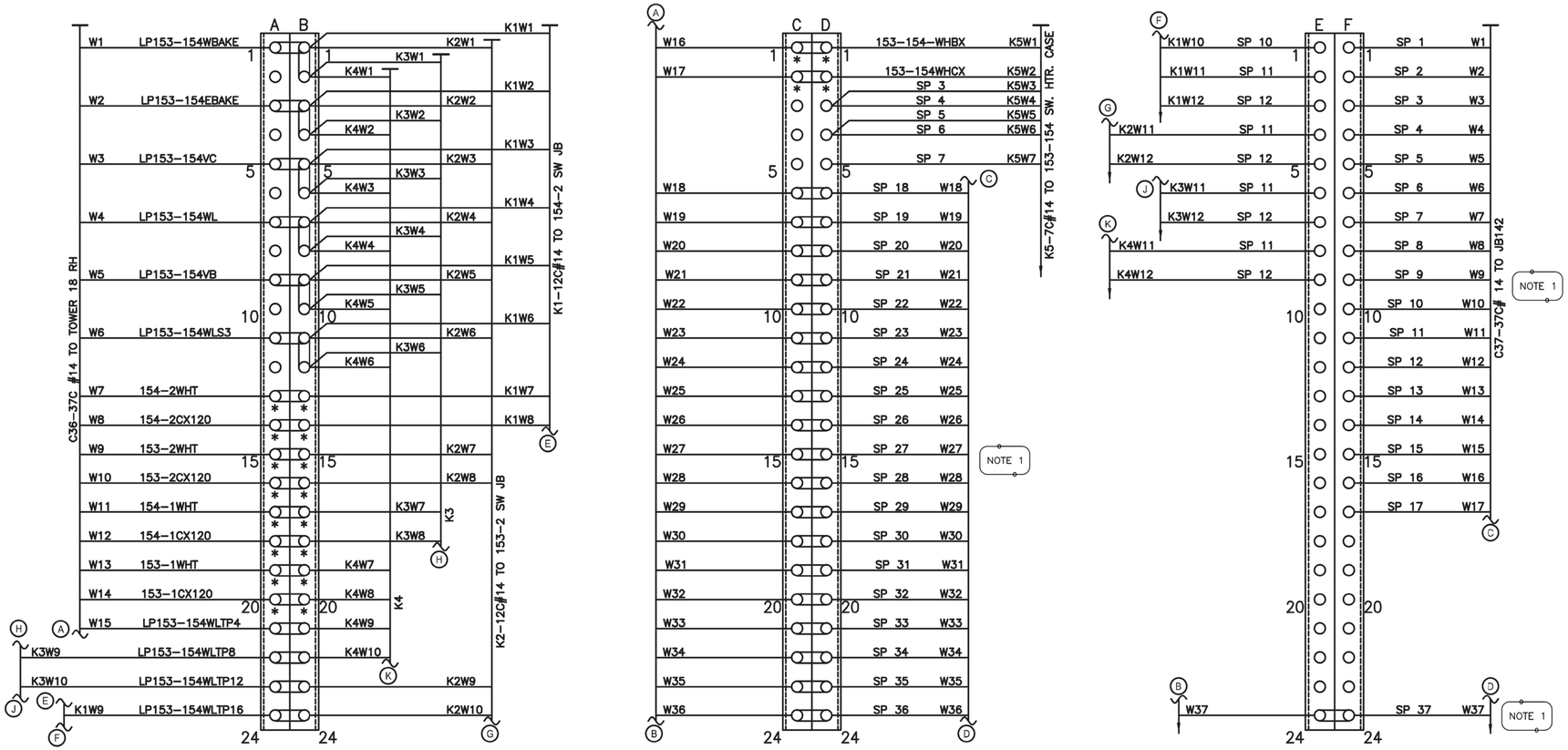

(X) = INDICATES CONTINUATION OF CABLE OF SAME PAGE

NOTES: * = INSULATED NUTS AND SLEEVES

—O—O— = IN

NOTES:

1. REPLACE CABLE C37 LIKE-FOR-LIKE, AS SHOWN ON TC-001 AND TC-002.

DESIGN BY:										TRANSYSTEMS 222 SOUTH RIVERSIDE PLAZA SUITE 610 CHICAGO, ILLINOIS 60606
DRAWN BY:										GANNETT FLEMING
CHECKED BY:		2	7/3/2023	ISSUED FOR BID	MAS	MAS	ECB			CHICAGO DEPARTMENT OF TRANSPORTATION DIVISION OF ENGINEERING
APPROVED BY:		1	4/28/2023	JB PLATFORM RELOCATION	MAS	MAS	ECB			
CDOT/APPROVED BY:		NO.	DATE	REVISIONS	DES.	DRW.	CHK.	DCCO	CDOT	

STATE / LAKE LOOP ELEVATED STATION
200 NORTH STATE STREET, CHICAGO, IL 60601

SPEC. NO.

JUNCTION BOX LAYOUT DETAIL
JB 152 - LOOP STATION MARKER 152+56

DRAWING NO.
TC-021

CDOT PROJECT D-1-209 | DATE: 4/28/2023 | REVISION NO. CR